STELLENBOSCH
STELLENBOSCH • PNIEL • FRANSCHHOEK
MUNISIPALITEIT • UMASIPALA • MUNICIPALITY

TENDER NO.: BSM 21/27

MAIN ROAD INTERSECTION IMPROVEMENTS: STRAND / ADAM TAS / ALEXANDER

VOLUME 3: PROCUREMENT DOCUMENT

NAME OF TENDERER:			
Total Bid Price (Inclusive of VAT) *(refer to page 262)*:			
COMPLETION PERIOD IN WORKING DAYS:			
ALTERNATIVE PRICE			
BBBEE LEVEL			
CLAIM POINTS FOR	**LOCALITY**	**YES**	**NO**

DATE: NOVEMBER 2026

PREPARED AND ISSUED BY:

Directorate: Finance:
Supply Chain Management Unit
Stellenbosch Municipality,
PO Box 17, Stellenbosch, 7599

CONTACT FOR ENQUIRIES REGARDING SPECIFICATIONS:

Nigell Winter

Manager: Traffic Engineering

Tel. Number: **+27 21 808 8223**

STELLENBOSCH
STELLENBOSCH • PNIEL • FRANSCHHOEK
MUNISIPALITEIT • UMASIPALA • MUNICIPALITY

The Tender Documents for this Contract comprise the following:

1 *General Conditions of Contract for Construction Works,* Third Edition, 2015, issued by South African Institution of Civil Engineering (SAICE), which the Tenderer shall purchase himself.

2 The SANS *Standardized Specification for Civil Engineering Construction,* prepared by Standards South Africa, which the Tenderer shall purchase himself.

3 The Project Document, containing the Tender Notice, Conditions of Tender, Tender Data, Returnable Schedules, General Conditions of Contract, Contract Data, Project Specifications, Pricing Instructions, Bills of Quantity, Form of Offer and Site Information, is issued by the Employer. The Employer's Form of Acceptance and any correspondence from the selected Tenderer, Performance Security and all Addenda issued during the period of tender will also form part of this document once a successful tenderer has been appointed.

1 and 2 are available from the following organisations (as applicable):

- **CESA, PO Box 68482, Bryanston, 2021.Tel: 011 463 2022 Fax: 011 463 7383, Email: general@cesa.co.za**
- **SAICE, Private Bag X200, Halfway House, 1685. Tel: 011 805 5947/8, Email: civilinfo@saice.org.za**
- **SAFCEC**
- **South African Bureau of Standards**

STELLENBOSCH
STELLENBOSCH • PNIEL • FRANSCHHOEK
MUNISIPALITEIT • UMASIPALA • MUNICIPALITY

PART A
INVITATION TO BID

YOU ARE HEREBY INVITED TO BID FOR REQUIREMENTS OF THE (*NAME OF MUNICIPALITY/ MUNICIPAL ENTITY*)					
BID NUMBER:	BSM 21/27	CLOSING DATE:	25 January 2027	CLOSING TIME:	12:00
DESCRIPTION	MAIN ROAD INTERSECTION IMPROVEMENTS: STRAND / ADAM TAS/ ALEXANDER				
THE SUCCESSFUL BIDDER WILL BE REQUIRED TO FILL IN AND SIGN A WRITTEN CONTRACT FORM (MBD7).					

BID RESPONSE DOCUMENTS MUST BE DEPOSITED IN THE BID BOX SITUATED AT **STELLENBOSCH MUNICIPALITY, TOWN HOUSE COMPLEX (MAIN BUILDING BETWEEN TOWN HALL AND MUNICIPAL LIBRARY), PLEIN STREET, STELLENBOSCH**					
SUPPLIER INFORMATION					
NAME OF BIDDER					
POSTAL ADDRESS					
STREET ADDRESS					
TELEPHONE NUMBER	CODE		NUMBER		
CELLPHONE NUMBER					
E-MAIL ADDRESS					
VAT REGISTRATION NUMBER					
TAX COMPLIANCE STATUS	TCS PIN:		**OR**	CSD No:	
B-BBEE STATUS LEVEL VERIFICATION CERTIFICATE [TICK APPLICABLE BOX]	☐ Yes ☐ No		B-BBEE STATUS LEVEL SWORN AFFIDAVIT	☐ Yes ☐ No	
[A B-BBEE STATUS LEVEL VERIFICATION CERTIFICATE/ SWORN AFFIDAVIT (FOR EMES & QSEs) MUST BE SUBMITTED IN ORDER TO QUALIFY FOR PREFERENCE POINTS FOR B-BBEE]					
1. ARE YOU THE ACCREDITED REPRESENTATIVE **IN SOUTH AFRICA FOR THE GOODS /SERVICES /WORKS OFFERED?**	☐Yes ☐No [IF YES ENCLOSE PROOF]		**2.** ARE YOU A FOREIGN BASED SUPPLIER FOR **THE GOODS /SERVICES /WORKS OFFERED?**	☐Yes ☐No [IF YES, ANSWER PART B:3]	
3. TOTAL NUMBER OF ITEMS OFFERED			**4. TOTAL BID PRICE**	**R**	
5. SIGNATURE OF BIDDER	.....		**6. DATE**		
7. NAME AND SURNAME OF RESPONSIBLE PERSON					
8. CAPACITY UNDER WHICH THIS BID IS SIGNED					

BIDDING PROCEDURE ENQUIRIES MAY BE DIRECTED TO:		**TECHNICAL INFORMATION MAY BE DIRECTED TO:**	
DEPARTMENT	FINANCE	CONTACT PERSON	NIGELL WINTER
CONTACT PERSON	JEANETTE WILLIAMS	TELEPHONE NUMBER	021 808 8223
TELEPHONE NUMBER	021 808 8524	E-MAIL ADDRESS	Nigell.Winter@stellenbosch.gov.za
E-MAIL ADDRESS	Jeanette.Williams@stellenbosch.gov.za		

PART B
TERMS AND CONDITIONS FOR BIDDING

1.	**BID SUBMISSION:**
1.1.	BIDS MUST BE DELIVERED BY THE STIPULATED TIME TO THE CORRECT ADDRESS. LATE BIDS WILL NOT BE ACCEPTED FOR CONSIDERATION.
1.2.	**ALL BIDS MUST BE SUBMITTED ON THE OFFICIAL FORMS PROVIDED–(NOT TO BE RE-TYPED) OR SUBMITTED ONLINE**
1.3.	THIS BID IS SUBJECT TO THE PREFERENTIAL PROCUREMENT POLICY FRAMEWORK ACT AND THE PREFERENTIAL PROCUREMENT REGULATIONS, 16 January 2023, THE STELLENBOSCH SUPPLY CHAIN MANAGEMENT POLICY, THE GENERAL CONDITIONS OF CONTRACT (GCC, JBCC, FIDIC OR CIDB) AND, IF APPLICABLE, ANY OTHER SPECIAL CONDITIONS OF CONTRACT.
2.	**TAX COMPLIANCE REQUIREMENTS**
2.1	BIDDERS MUST ENSURE COMPLIANCE WITH THEIR TAX OBLIGATIONS.
2.2	BIDDERS ARE REQUIRED TO SUBMIT THEIR UNIQUE PERSONAL IDENTIFICATION NUMBER (PIN) ISSUED BY SARS TO ENABLE THE ORGAN OF STATE TO VIEW THE TAXPAYER'S PROFILE AND TAX STATUS.
2.3	APPLICATION FOR THE TAX COMPLIANCE STATUS (TCS) CERTIFICATE OR PIN MAY ALSO BE MADE VIA E-FILING. IN ORDER TO USE THIS PROVISION, TAXPAYERS WILL NEED TO REGISTER WITH SARS AS E-FILERS THROUGH THE WEBSITE WWW.SARS.GOV.ZA.
2.4	FOREIGN SUPPLIERS MUST COMPLETE THE PRE-AWARD QUESTIONNAIRE IN PART B:3.
2.5	BIDDERS MAY ALSO SUBMIT A PRINTED TCS CERTIFICATE TOGETHER WITH THE BID.
2.6	IN BIDS WHERE CONSORTIA / JOINT VENTURES / SUB-CONTRACTORS ARE INVOLVED; EACH PARTY MUST SUBMIT A SEPARATE TCS CERTIFICATE / PIN / CSD NUMBER.
2.7	WHERE NO TCS IS AVAILABLE BUT THE BIDDER IS REGISTERED ON THE CENTRAL SUPPLIER DATABASE (CSD), A CSD NUMBER MUST BE PROVIDED.
3.	**QUESTIONNAIRE TO BIDDING FOREIGN SUPPLIERS**
3.1.	IS THE ENTITY A RESIDENT OF THE REPUBLIC OF SOUTH AFRICA (RSA)? ☐ YES ☐ NO
3.2.	DOES THE ENTITY HAVE A BRANCH IN THE RSA? ☐ YES ☐ NO
3.3.	DOES THE ENTITY HAVE A PERMANENT ESTABLISHMENT IN THE RSA? ☐ YES ☐ NO
3.4.	DOES THE ENTITY HAVE ANY SOURCE OF INCOME IN THE RSA? ☐ YES ☐ NO
3.5.	IS THE ENTITY LIABLE IN THE RSA FOR ANY FORM OF TAXATION? ☐ YES ☐ NO

IF THE ANSWER IS "NO" TO ALL OF THE ABOVE, THEN IT IS NOT A REQUIREMENT TO REGISTER FOR A TAX COMPLIANCE STATUS SYSTEM PIN CODE FROM THE SOUTH AFRICAN REVENUE SERVICE (SARS) AND IF NOT REGISTER AS PER 2.3 ABOVE.

NB: FAILURE TO PROVIDE ANY OF THE ABOVE PARTICULARS MAY RENDER THE BID INVALID.
NO BIDS WILL BE CONSIDERED FROM PERSONS IN THE SERVICE OF THE STATE.

SIGNATURE OF BIDDER:.....

CAPACITY UNDER WHICH THIS BID IS SIGNED:.....

NAME AND SURNAME DATE

....

CONTENTS

PAGE(S)

VOLUME 3:

THE TENDER

PART T1: TENDERING PROCEDURES 8

T1.1 Tender Notice and Invitation to Tender 9

T1.2 Tender Data 13

T1.3 Standard Conditions of Tender 26

T1.4 General Conditions of Tender 45

PART T2: RETURNABLE DOCUMENTS..... 47

T2.1 List of Returnable Documents..... 48

T2.2 Returnable Schedules..... 49

THE CONTRACT

PART C1: AGREEMENTS AND CONTRACT DATA 104

C1.1 Form of Offer and Acceptance..... 105

C1.2 Contract Data 110

C1.3 Performance Guarantee (Pro forma) 132

C1.4 Agreement in Terms of Occupational Health and Safety Act, 1993 (Act No 85 of 1993) 135

C1.5 Contract of Temporary Employment as Community Liaison Officer 139

PART C2: PRICING DATA 142

C2.1 Pricing Instructions..... 143

C2.2 Bill of Quantities 145

CONTENTS

		PAGE(S)
PART C3:	SCOPE OF WORKS	263
C3.1	Description of the Works	264
C3.2	Engineering	268
C3.3	Procurement	272
C3.4	Construction	273
	Specifications (Civil)	273
	Specifications (Electrical)	321
C3.5	Management of the Works	377
C3.6	Annexures	385
	Annex 1: Monthly Project Labour Report	386
	Annex 2: B-BBEE Sub-contractor Expenditure Report	389
	Annex 3: Joint Venture Expenditure Report	391
	Annex 4: Environmental Specifications	393
	Annex 5: Health and Safety Specifications	412
	Annex 6: Quality Control Sheets	443
	Annex 7: Geotechnical Report	454
PART C4:	SITE INFORMATION	495
C4.1	Site Information	496

VOLUME 4:

Drawings: 500

STELLENBOSCH
STELLENBOSCH • PNIEL • FRANSCHHOEK
MUNISIPALITEIT • UMASIPALA • MUNICIPALITY

THE TENDER

PART T1 TENDERING PROCEDURES ..... 8 – 46

PART T2 RETURNABLE DOCUMENTS..... 47 – 102

STELLENBOSCH
STELLENBOSCH • PNIEL • FRANSCHHOEK
MUNISIPALITEIT • UMASIPALA • MUNICIPALITY

PART T1 TENDERING PROCEDURES

T1.1 TENDER NOTICE AND INVITATION TO TENDER 9

T1.2 TENDER DATA 13

T1.3 Standard Conditions of Tender (as published in Government Gazette No 38960 of 10 July 2015) bound directly after Tender Data 26

T1.4 GENERAL CONDITIONS OF TENDER 45

STELLENBOSCH
STELLENBOSCH • PNIEL • FRANSCHHOEK
MUNISIPALITEIT • UMASIPALA • MUNICIPALITY

T1.1 TENDER NOTICE AND INVITATION TO TENDER

STELLENBOSCH MUNICIPALITY HEREBY INVITES YOU TO TENDER FOR B/SM 21/27: MAIN ROAD INTERSECTION IMPROVEMENTS: STRAND / ADAM TAS / ALEXANDER

TENDER NUMBER:	B/SM 21/27
DESCRIPTION:	MAIN ROAD INTERSECTION IMPROVEMENTS: STRAND / ADAM TAS / ALEXANDER JUNCTION
CLOSING DATE:	25 January 2027 @ 12:00
CLOSING TIME:	12h00: Bids will be opened in the **Council Chambers or Supply Chain Management Boardroom**
CIDB:	The following CIDB class of construction works will be applicable to the Tender, in accordance with the sum tendered or value determined in accordance with regulation 25(7A) of the Construction Industry Development Regulations, 2004 (as amended) – As of 23 May 2019 – **Class of Construction Works: 7CE or higher.**

INFORMATION:
Tender Specifications: Nigell Winter at 021 808 8222 email: Nigell.Winter@stellenbosch.gov.za
SCM Requirements: Jeanette Williams at 021 808 8524 email: Jeanette.Williams@stellenbosch.gov.za

Office hours for collection; 08h00 – 15h30

There will be one compulsory meeting on Site Meeting.

A compulsory site meeting will be held **on 02 December 2026** at **10h00**, at Erf 303, cnr of R44\R310 (Adam Tas Rd) and Alexander Street, Stellenbosch Central. Tenderers who fail to attend the compulsory information session will be regarded as non-compliant.

Tenders may only be submitted on the Tender documentation issued by Stellenbosch Municipality and must be valid **for 180 days** after tender closing. Late, electronic format, telephonic or faxed Tenders will not be considered, and Stellenbosch Municipality does not bind itself to accept the lowest, part of or any Tender.

Sealed Tenders, with **"B/SM 21/27: MAIN ROAD INTERSECTION IMPROVEMENTS: STRAND / ADAM TAS / ALEXANDER"** clearly endorsed on the envelope, must be deposited in the Tender box at the offices of the Stellenbosch Municipality, Town House Complex (Main Building between Town Hall and Municipal Library), Plein Street, Stellenbosch. The Tender box is accessible 24 hours a day and Tenders must be accompanied by the completed Tender documents. Tenders not accompanied by a complete Tender document, will not be considered.

NOTE: This tender will be evaluated in terms of the General Conditions of Contract, Supply Chain Management Policy and relevant specification as depicted in the document and the Stellenbosch Preferential Procurement Policy effective from 16 January 2023 in accordance with the Preferential Procurement Regulations that was promulgated by the Minister of Finance on 04 November 2022 in Government Gazette No 47452.

STELLENBOSCH
STELLENBOSCH • PNIEL • FRANSCHHOEK
MUNISIPALITEIT • UMASIPALA • MUNICIPALITY

The preferential points system applied is as follows: 80/20 and 90/10 in terms of the approved policy.

Price	**80**	**90**
B-BBEE status level of contribution	**10**	**5**
Locality	**10**	**5**
Total points for Price, B-BBEE and Locality	**100**	**100**

The following conditions to Tender exist (failure to comply may result in your Tender being disqualified):

1. This Tender is subject to the general conditions of contract (GCC) and special conditions for Tendering;
2. Relevant terms of reference;
3. Tenderers must be registered on the Central supplier database (CSD) if they wish to conduct business with the municipality;
4. No award will be made to tenderers whose tax status is non-compliant;
5. Tenders submitted must be in a sealed envelope clearly marked with the Tender number, placed in the tender box before closing time. Failure will result in the tender being invalid;

Tender documents, in English, are available free of charge on the website: www.stellenbosch.gov.za. Alternatively, hard copies of the document are obtainable from the offices of the Supply Chain Management Unit, Stellenbosch Municipality, Town House Complex, 1st Floor, Plein Street, Stellenbosch, upon payment of a non-refundable fee of ***R2 530.00 per document.***

The Tender Documentation, including all annexures, supporting documentation and tender drawings, shall be made available to all Tenderers in electronic format (PDF) via a secure One Drive link https://bviwcza-my.sharepoint.com/:f:/g/personal/franciscusg_bviwc_co_za/IgBYEBAEYn73QYZXdOMDogbCAeIHRdauXNHuJ9ozZfo8uhM?e=ylVFkk or other approved cloud storage platform. "….franciscusg_bviwc_co_za/Ig…"

Tenderers shall download the electronic documentation for the preparation and compilation of their Tender submissions. The tender process shall be adapted to accommodate and electronic tendering structure, as set out below.

Requirements for Tender submission
The Tender Documents **(including the completed Form of Offer**), along with any required supporting documentation, must be submitted as follows:

1. **Electronic Copy:** A complete electronic copy in Portable Document Format (PDF) must be provided on a Universal Serial Bus (USB) drive, whether electronically completed or hand completed and scanned.
2. **Printed Copy:** The Form of Offer as well as the Summary of Schedules must be printed and hand completed.

The USB drive and the printed copy of the Form of Offer and the Summary of Schedules to be placed in a sealed envelope.

The sealed envelope must clearly display the following;
- name and address of the tenderer,
- the tender number and title,
- and the closing date.

It must be delivered to the designated closing venue before the specified closing time.

Note: The municipality will never contact you to pay money in exchange for the award of a tender.

G Mettler (Ms)
MUNICIPAL MANAGER

Please note that any suspicious collusive tendering behaviour and restrictive practices by tenderers will be reported to the Competition Commission for investigation and possible imposition of administrative penalties.

STELLENBOSCH
STELLENBOSCH • PNIEL • FRANSCHHOEK
MUNISIPALITEIT • UMASIPALA • MUNICIPALITY

TENDER KENNISGEWING

STELLENBOSCH NOOI U VIR DIE VOLGENDE TENDER: B/SM: 21/27 DIE KONSTRUKSIE VAN BASIESE DIENSTE VIR DIE VOORGESTELDE VERBETERINGE OP HOOF PAD INTERSEKSIE: STRAND / ADAM TAS / ALEXANDER

TENDER NOMMER:	BSM 21/27
BESKRYWING:	DIE KONSTRUKSIE VAN BASIESE DIENSTE VIR DIE VOORGESTELDE VERBETERINGE OP HOOF PAD INTERSEKSIE: STRAND / ADAM TAS / ALEXANDER
SLUITINGSDATUM:	25 January 2027 @12:00
TYD VAN SLUITING:	12h00**.** Tenders sal oopgemaak word in die Raadsaal of in Voorsieningskanaalbestuurs Raadsaal.
KIOR:	Die volgende KIOR klas vir konstruksiewerk, in ooreenstemming met die totale bedrag getender of waarde bepaal in ooreenstemming met regulasie 25 (7A) van die Konstruksie-industrie Ontwikkelingsraad, Regulasies, 2004 (soos gewysig) op 23 Mei 2019, sal op die bod van toepassing wees. Tenderaars moet 'n **geskatte KIOR kontrakteurgradering** van ten minste **7CE of hoër** hê

NAVRAE:

Tender spesifikasies:	Nigell Winter at 021 808 8222 epos: Nigell.Winter@stellenbosch.gov.za
Vkb vereistes:	Jeanette Williams om 021 808 8524 epos: Jeanette.Williams@stellenbosch.gov.za
Kantoor Ure:	08h00 – 15h30

Daar is een verpligte vergaderings, 'n werfvergadering.

'n **Verpligte terreinvergadering** word op **02 Desember 2026 om 11:00**, **by Erf 303 op die hoek van R44\R310 (Adam Tas en Alexanderstraat**, Stellenbosch Sentraal. Tenderaars wat nie die verpligte inligtingsessie bywoon nie, sal nie in ag geneem word nie.

Tenders mag slegs ingedien word op die tenderdokumentasie verskaf deur Stellenbosch Munisipaliteit en moet geldig wees vir **180 dae** na die sluitingsdatum. Laat, elektroniese formaat of gefakse tenders sal nie aanvaar word nie en Stellenbosch Munisipaliteit is nie verplig om die laagste of enige tender wat ingedien word te aanvaar nie.

Verseëlde tenders duidelik gemerk**: "BSM 21/27: DIE KONSTRUKSIE VAN BASIESE DIENSTE VIR DIE VOORGESTELDE VERBETERINGE OP HOOF PAD INTERSEKSIE: STRAND / ADAM TAS / ALEXANDER"** op die koevert, moet geplaas word in tenderbus buite die kantore van Stellenbosch Munisipaliteit, Meenthuis Kompleks, (Hoofgebou tussen Stadsaal en Munisipale Biblioteek), Stellenbosch. Die tenderbus is 24 uur per dag beskikbaar en tenders moet vergesel word met die voltooide stel tenderdokumente. Tenderaanbiedinge wat nie deur die volledige tenderdokument vergesel word nie, sal nie oorweeg word nie.

LET WEL: Hierdie tender sal geëvalueer word in terme van die Algemene Kontrakvoorwaardes, Voorsieningskettingbestuursbeleid en toepaslike spesifikasie soos uitgebeeld in die document, asook die Stellenbosch Voorkeurverkrygingsbeleid van krag vanaf 16 Januarie 2023 in ooreenstemming met die Voorkeurverkrygingsregulasies wat gepromulgeer is deur die Minister van Finansies op 04 November 2022 in Staatskoerant No 47452.

Die voorkeurpunte stelsel is soos volg gebaseer: 80/20 en 90/10 in terme van die goedgekeurde beleid:

Prys	**80**	**90**
BBSEB status	**10**	**5**
Ligging	**10**	**5**
Totaal punte vir Prys, BBSEB en Ligging	**100**	**100**

STELLENBOSCH
STELLENBOSCH • PNIEL • FRANSCHHOEK
MUNISIPALITEIT • UMASIPALA • MUNICIPALITY

Die volgende voorwaardes vir Tender soos volg: (versuim om te voldoen, kan veroorsaak dat u Tender gediskwalifiseer word):

1. Hierdie tender is onderworpe aan die Standaard Tender Voorwaardes en spesiale voorwaardes vir die tender;
2. Toepaslike opdrag;

3. Tenderaars moet geregistreer wees op Sentrale verskaffersdatabasis as hulle met die munisipaliteit sake wil doen;
4. Geen toekenning sal gemaak word aan diensverskaffers wie se Belasting status ongeldig is.
5. Die tender wat ingedien moet word, moet in 'n verseëlde koevert wees wat duidelik gemerk is met die Tendernommer, wat in die tenderbus voor sluitingstyd geplaas word. Versuim sal tot gevolg hê dat die tender ongeldig is.

Tenderdokumente, in Engels, is verkrygbaar by die kantoor van die Voorsieningskanaalbestuurseenheid, Stellenbosch Munisipaliteit, Meenthuis Kompleks, *1ste Vloer, Pleinstraat, Stellenbosch na betaling van 'n nie-terugbetaalde tenderdeelnamefooi van* ***R2 530.00 per dokument.*** *Alternatiewelik mag die dokument gratis afgelaai word vanaf die webblad www.stellenbosch.gov.za.*

Die Tenderdokumentasie, insluitend alle bylaes, ondersteunende dokumentasie en tendertekeninge, sal in elektroniese formaat (PDF) aan alle Tenderaars beskikbaar gestel word via 'n beveiligde OneDrive-skakel https://bviwcza-my.sharepoint.com/:f:/g/personal/franciscusg_bviwc_co_za/IgBYEBAEYn73QYZXdOMDogbCAeIHRdauXNHuJ9ozZfo8uhM?e=ylVFkk of ander goedgekeurde wolkbergingsplatform. "….franciscusg_bviwc_co_za/Ig…"

Tenderaars moet die elektroniese dokumentasie aflaai vir die voorbereiding en samestelling van hul Tenderaanbiedinge. Die tenderproses sal aangepas word om 'n elektroniese tenderstruktuur te akkommodeer, soos hieronder uiteengesit.

Vereistes vir Tenderindiening
Die Tenderdokumente, insluitend die voltooide **Vorm van Aanbod** en alle vereiste ondersteunende dokumentasie, moet soos volg ingedien word:
1. **Elektroniese afskrif:** 'n Volledige elektroniese afskrif van die Tenderindiening in Portable Document Format (PDF)
2. moet op 'n Universal Serial Bus (USB)-skyf voorsien word. Die dokumentasie mag elektronies voltooi word of met die hand voltooi en daarna geskandeer word.
3. **Gedrukte afskrif:** Die **Vorm van Aanbod** en **Opsomming van Skedules** moet gedruk en met die hand voltooi word.

Die Tenderaar sal verantwoordlik wees om die dokumentasie USB-skyf met die volledige elektroniese Tenderindiening, tesame met die gedrukte en voltooide Vorm van Aanbod en Opsomming van Skedules, moet in 'n verseëlde koevert geplaas word.

Die verseëlde koevert moet duidelik die volgende aandui:

- Naam en adres van die Tenderaar;
- Tendernommer en -titel; en
- Tender-sluitingsdatum.

Die verseëlde koevert moet vóór die voorgeskrewe sluitingstyd en -datum by die aangewese tenderindienings-/sluitingslokaal afgelewer word

Let wel: Die munisipaliteit sal jou nooit kontak om geld te betaal in ruil vir die toekenning van 'n tender nie.

G Mettler (Me)
MUNISIPALE BESTUURDER

STELLENBOSCH
STELLENBOSCH • PNIEL • FRANSCHHOEK
MUNISIPALITEIT • UMASIPALA • MUNICIPALITY

T1.2 TENDER DATA

The Standard for Uniformity in Construction Procurement was first published in Board Notice 62 of 2004 in Government Gazette No 26427 of 9 June 2004. It was subsequently amended in Board Notice 67 of 2005 in Government Gazette No 27831 of 22 July 2005, Board Notice 99 of 2005 in Government Gazette No 28127 of 14 October 2005, Board Notice 93 of 2006 in Government Gazette No 29138 of 18 August 2006, Board Notice 9 of 2008 in Government Gazette No 30692, of 1 February 2008, Board Notice 11 of 2009 in Government Gazette No 31823 of 30 January 2009, Board Notice 86 of 2010 in Government Gazette No 33239 of 28 May 2010 and Board Notice 136 of 2015 in Government Gazette 38960 of 10 July 2015 (see www.cidb.org.za).

This edition incorporates the amendments made in Board Notice 136 of 2015 in Government Gazette 38960 of 10 July 2015 and the erratum notices issued thereafter.

The following variations, amendments and additions to the Standard Conditions of Tender asset out in the Tender Data below shall apply to this tender:

C.1 General

C.1.1 Actions

Add the following:

The Employer is:

STELLENBOSCH MUNICIPALITY, represented by the Engineering Department.PO Box 17
Stell
enbo
sch
7599

C.1.2 Tender Documents: GCC

Add the following:

"The following documents form part of this contract:

VOLUME 1: The General Conditions of Contract for Construction Works (Third Edition) 2015 as published by the South African Institution of Civil Engineering. This publication is available and tenderers must obtain copies at their own cost from the South African Institution of Civil Engineering (SAICE), Private Bag X200, Halfway House 1685, Tel: (011) 805 5947, Fax: (011) 805 5971, e-mail:civilinfo@saice.org.za.

VOLUME 2: The South African Bureau of Standards Standardized Specification for Civil Engineering Construction SANS 1200, prepared by and obtainable from the South African Bureau of Standards, Private Bag X191, Pretoria 0001, Tel: (012) 428 6929, Fax: (012) 428 6928, Web site: www.stansa.co.za.

Volumes 1 and 2 may also be inspected, by appointment, at the offices of the Employer's Agent during normal office hours

STELLENBOSCH
STELLENBOSCH • PNIEL • FRANSCHHOEK
MUNISIPALITEIT • UMASIPALA • MUNICIPALITY

The tender documents issued by the Employer comprise:

VOLUME 3: The Tender Document (this document), in which is bound:

THE TENDER

Part T1 Tendering procedures
T1.1 Tender Notice and Invitation to Tender
T1.2 Tender Data

Part T2 Returnable documents
T2.1 List of returnable documents
T2.2 Returnable schedules

THE CONTRACT

Part C1 Agreements and Contract Data
C1.1 Form of Offer and Acceptance
C1.2 Contract Data
C1.3 Performance Guarantee
C1.4 Agreement in terms of Occupational Health and Safety Act, 1993
C1.5 Contract of Temporary Employment of Community Liaison Officer

Part C2 Pricing Data
C2.1 Pricing Instructions
C2.2 Bill of Quantities

Part C3 Scope of Work
C3 Scope of Work

Part C4 Site Information
C4 Site Information

VOLUME 4: Drawings

Volume 3 is deemed the “Returnable Document” which must be returned to the Employer in terms of submitting a tender offer.

C.1.4 The Employer's agent is:

Add the following:
Attention is drawn to the fact that verbal information, given by the Employer's Agent during site visits / clarification meetings or at any other time prior to the award of the Contract, will not be regarded as binding on the Employer. Only information issued formally by the Employer in writing to tenderers will be regarded as amending the Tender Documents.

Name:	BVi Consulting Engineers Western Cape (Pty) Ltd
Address:	Block B2, Edison Square, C/o Edison Way & Century Avenue Century City Cape Town, 7441
Contact Person:	Mr Franciscus Greeff
Tel:	021 527 7000
E-mail:	franciscusg@bviwc.co.za

C.1.5 The Employer's right to accept or reject any tender offer

Add the following:

C.1.5.3The Employer may reject a tender if, in the opinion of the Employer, the tenderer will be unable to achieve the contract participation goal tendered, in the performance of the contract.

C.1.6.2 Competitive negotiation procedure

Add the following to C.1.6.2
A competitive negotiation procedure will **not** be followed.

C.1.6.3 Proposal procedure using two-stage system

Add the following to C.1.6.3:
A two-stage system will **not** be followed.

C.2 Tenderer's obligations

C.2.1 Eligibility

Add the following:
Only those tenderers who satisfy the following eligibility criteria are eligible to submit tenders:

C.2.1.2 Construction Industry Development Board (CIDB) Registration

Only those tenderers who are registered with the CIDB, or are capable of being so registered prior to the evaluation of submissions, in a contractor grading designation equal to or higher than a contractor grading designation determined in accordance with the sum tendered, or a value determined in accordance with Regulation 25(1B) or 25(7A) of the Construction Industry Development Regulations, for a **7CE class of construction work**, are eligible to have their tenders evaluated.

Joint ventures are eligible to submit tenders provided that:

(1) every member of the joint venture is registered with the CIDB;
(2) the lead partner has a contractor grading designation in the CE class of construction work; and
(3) the combined contractor grading designation calculated in accordance with the Construction Industry Development Regulations is equal to or higher than a contractor grading designation determined in accordance with the sum tendered for a CE class ofconstruction work or a value determined in accordance with Regulation 25(1B) or 25(7A) of the Construction Industry Development Regulations.

C.2.1.4 **Stellenbosch Municipality Suppliers Database Registration**

The Employer will only enter into a formal contract with the successful tenderer who is registered on the Central Suppliers Database (CSD). In the case of joint venture partnerships this requirement will apply individually to each party of the joint venture.

C.2.1.4.2 **Track Record**

In order to be declared responsive and considered for an appointment in terms of this tender, the tenderer must at least have the following proven track record with contactable references:

a) Two (2) successfully completed on Class 3 and higher arterial Provincial classified Roadways, Major Traffic intersections construction and related bulk earthworks, civil structures/ infrastructure and road construction projects with a value exceeding R20 million (incl. VAT) or more over the past 8 years

Tenderers are to provide the information in **Schedule 13, Part T2.2**: (Returnable Schedules)

Where the entity tendering is a Joint Venture the tender must be accompanied by a statement describing exactly what aspects of the work will be undertaken by each party to the joint venture appended to **Schedule 5, Part T2.2**: (Returnable Schedules)

C.2.1.4.3 **Key Personnel**

In order to be declared responsive and considered for an appointment in terms of this tender, the tenderer must at least have the following key personnel in its permanent employment at the close of tender and for the duration of the contract. Alternatively, a signed undertaking from a sub-contractor having the required personnel, stating that they will undertake the necessary work on behalf of the tenderer in terms of a sub-contractor agreement will be acceptable. Such undertaking must be attached to **Schedule 13, Part T2.2:** (Returnable Schedules)

a) An experienced Site Manager with Three (3) or more successfully completed contracts as Contract manager on Civil infrastructure projects with a value exceeding R20 million (incl. VAT) with a degree or National Diploma in Civil Engineering or Industry relevant field AND with minimum 10 years working experience in similar field.

b) An experienced Construction Manager with Two (2) or more successfully completed contracts as a Site Agent on Civil Infrastructure projects with a value exceeding R20 million (incl. VAT) with a Degree or National Diploma in Civil Engineering or Industry relevant field AND with minimum 10 years working experience in a similar field.

Tenderers are to provide the information in **Schedule 13, Part T2.2**: (Returnable Schedules)

C.2.1.4.5 **Compulsory clarification meeting**

Tenderers are required to attend a compulsory clarification meeting at which they may familiarise themselves with aspects of the proposed work, services or supply and pose questions.

Details of the meeting(s) are stated in the General Tender Information.

Only those tenders submitted by tenderers whose attendance at this meeting have been recorded will be declared responsive.

C.2.1.4.7 **Local Labour**

In order to be declared responsive and considered for an appointment in terms of this tender, all labour as classified under targeted labour in **Part C3.5**: Management, will be

sourced from the targeted area. This is 100% for unskilled labour and semi-skilled labour up to the daily threshold.

C.2.1.4.8 **EPWP**

In order to be declared responsive and considered for an appointment in terms of this tender, all labour as classified under targeted labour in **Part C3.5**: Management, will be sourced from the targeted area. This is 100% for unskilled labour and semi-skilled labour up to the daily threshold.

C.2.7 **Clarification Meeting**
Add the following:
The arrangements for a **compulsory** site meeting are stated in the Tender Notice andInvitation to Tender:

Tenderers should be represented at the site meeting by a person who is suitably qualified and experienced to comprehend the implications of the work involved. Tenderers must request a certificate of attendance for the virtual clarification meeting and sign the attendance list in the name of the tendering entity after attending the site meeting. Addenda will be issued to, and tenders will be received only from those tendering entities appearingon the attendance list.

C.2.12 Alternative Tender offers
Not Applicable to this Contract.

C.2.13 Submitting a tender offer
Add the following to C.2.13.3

C.2.13.1 Where the tendering entity is a joint venture it is recommended that the standard CIDB Joint Venture Agreement be used.

C.2.13.3 Parts of each tender offer communicated on paper shall be submitted as an original, plus 0 (**NIL**) copies.

C.2.13.4 *Add to clause C.2.13.4:*
Certificate of Authority for Joint Ventures and the Joint Venture Agreement must be completed and submitted as part of the bid documents.

1. No amendments to Joint Venture Agreement may be made without the prior approval of the Municipality; if not accepted by the Municipality and the Joint venture continue without approval the Joint venture contract can be cancelled as if poor performance had taken place;
2. Joint venture will only qualify for points for their B-BBEE status level as a legal entity, provided that the entity submits, together with the submission of the bid, their B-BBEE status level certificate issued in the name of the Joint venture.
3. All members of the Joint venture must submit, with the bid documents:
    - a valid tax clearance certificate or SARS tax pin, individually;
    - an agreement that clearly provides clarity of Profit and liability sharing; and a resolution taken by the board of directors of the Joint venture and other information that agrees with the Joint Venture agreement.

STELLENBOSCH
STELLENBOSCH • PNIEL • FRANSCHHOEK
MUNISIPALITEIT • UMASIPALA • MUNICIPALITY

C.2.13.5 Add the following to C.2.13.5

The Employer's address for delivery of tender offers and identification details to be shown on each tender offer package are:

Location of Tender box:	Foyer on the ground floor of Stellenbosch Municipality
Physical address:	STELLENBOSCH MUNICIPALITY 71 Plein Street Stellenbosch
Identification details:	Tender number: **TENDER B/SM 21/27**
	Title of Tender: **MAIN ROAD INTERSECTION IMPROVEMENTS: STRAND / ADAM TAS / ALEXANDER**

Sealed tenders (including any alternative tenders) with the Tenderer's name and address and the endorsement "**TENDER NO. B/SM 21/27: MAIN ROAD INTERSECTION IMPROVEMENTS: STRAND / ADAM TAS / ALEXANDER**" on the envelope(s), must be placed in the appropriate official tender box at the abovementioned address.

C.2.13.6 Add the following to F2.13.6

A two-envelope procedure will **not** be followed (C.3.5)

C.2.13.9 Telephonic, facsimile or emailed tender offers will **not** be accepted.

C.2.13.10 Add the following sub-clause after C.2.13.9:

By signing the offer part C1.1 Offer and Acceptance the tenderer declares that all the information provided in the tender submission is true and correct.

C.2.15 Closing time

Add the following to C.2.15.1:

F.2.15.1 The closing time for submission of tender offers is as stated in the Tender Notice andInvitation to Tender. Any Tender received after the appointed time for the closing of tenders will not be considered and will be filed unopened with the other tenders received or returned to the Tenderer at his/her request. Sealed tenders, with the **"Tender Number and Title"** clearly endorsed on the envelope, must be deposited in the **tender box**. The tender must be lodged by the Tenderer in the tender box in the Main Hall Entrance, Stellenbosch Municipal Offices, Plein Street, Stellenbosch Tenders that are deposited in the incorrect box will not be considered.

C.2.16 Tender offer validity

Add the following to C.2.16.1:

F.2.16.1 The tender offer validity period is **180 days**.

C.2.17 Clarification of tender offer after submission

Add the following to C.2.17:

A tender will be rejected as non-responsive if the tenderer fails to provide any clarification requested by the Employer, within the time for submission stated in the Employer's written request for such clarification. A tender will also be rejected as non-responsive if the tenderer fails, within the time stated in writing by the Employer, to comply with the requirements of C.4.3.

C.2.18 **Provide other material**

Delete the following word in C.2.18.1:

C.2.18.1 notarized

Add the following to C.2.18.1 at the end of the first paragraph:

Provide, on written request by the Employer, where the transaction value (tendered amount) inclusive of VAT **exceeds R 10 million**:

a) audited annual financial statement for the past 3 years, or for the period since

establishment if established during the past 3 years, if required by law to prepare annual financial statements for auditing;

b) a certificate signed by the tenderer certifying that the tenderer has no undisputed commitments for municipal services towards a municipality or other service provider in respect of which payment is overdue for more than 30 days;

c) particulars of any contracts awarded to the tenderer by an organ of state during the past five years, including particulars of any material non-compliance or dispute concerning the execution of such contract;

d) a statement indicating whether any portion of the goods or services are expected to be sourced from outside the Republic, and, if so, what portion and whether any portion of payment from the municipality or municipal entity is expected to be transferred out of the Republic.

Each party to a Consortium/Joint Venture shall submit separate certificates/statements in the above regard.

Add the following after C.2.18.2:

C.2.18.3 Tenderers shall fully cooperate with the Employer's external service provider appointed to perform a due diligence review and risk assessment upon receipt of such written instruction from the Employer.

Failure to fully cooperate could result in a tender being declared as non-responsive.

C.2.18.4 **Compliance with Occupational Health and Safety Act, 85 of 1993**

Tenderers are to note the requirements of the Occupational Health and Safety Act, 85 of 1993 and the Construction Regulations, 2014 issued in terms of Section 43 of the Act. The Tenderer shall be deemed to have read and fully understood the requirements of the above Act and Regulations and to have allowed for all costs in compliance therewith.

In this regard the Tenderer shall submit with his tender or upon request, appended to Schedule 18: Health and Safety Plan in T2.2: Returnable Schedules, a draft Health and Safety Plan in respect of the Works in sufficient detail to demonstrate the necessary competencies and resources to perform the construction work all in accordance with the Act, Regulations and Health and Safety Specification in Part C3.5 Management in the Scope of Work.

C.2.20 **Submit securities, bonds, policies, etc.**

Add the following:

The Tenderer is required to submit with his Tender a letter of intent from an approved insurer undertaking to provide the Performance Bond to the format included in Part T2.2 of this procurement document.

C.2.22 Return of other tender document

Add the following:

Return all retained Tender Documents within 28 days after the expiry of the validity period.

C.2.23 Certificates

Add the following:

The Tenderer is required to submit the following with his tender:

The Tenderer must complete and submit all forms and certificates contained in this Tender. The tenderer must also submit with this tender all requirements as stated in these forms and certificates, as listed below:

1. Tender Details
2. Authority to Bid Form
3. Certificate of Authority for Joint Venture
4. MBD 2 Tax Clearance Certificate Requirements
5. MBD 4 Declaration of Interest
6. MBD 5 Declaration for Procurement above R10 Million
7. MBD 6.1 Preference Points Claim Form
8. MBD 8 Declaration of Bidders Past Supply Chain Management Practices
9. MBD 9 Certificate of Independent Bid Determination
10. MBD10 Certificate for Payment of Municipal Services
11. Eligibility Sheets 1 and 2

12. Form of Offer and Acceptance
13. Declaration by Tenderer
14. Occupational Health and Safety Agreement
15. A letter of good standing from the Compensation Commissioner, or a licensed compensation insurer.

C.2.23.1 Tax Compliance Status

Tenderers shall be registered and in good standing with the South African Revenue Services (SARS) and comply with conditions stated in MBD 1 (Part B).

Each party to a Consortium/Joint Venture shall comply to the conditions stated in MBD 1.

Tenderers are to note that the Employer will not award a contract to a Tenderer whose tax matters are not in order. Furthermore, the successful Tenderer (Contractor) is required to submit updated Tax Compliance Status information to the Employer should any current tax information status expire during the contract.

C.2.23.2 Bargaining Council Certificates

Tenderers must be registered with a relevant Bargaining Council (if such be in place) and must submit, with the tender, the applicable Certificate of Compliance (letter of good standing in terms of the relevant Government Gazette).

Each party to a Consortium/Joint Venture shall submit separate certificates in the above regard.

C.2.23.3 **Broad-Based Black Economic Empowerment (B-BBEE) Status Level Certificate(s)**

Tenderers shall submit documentary evidence/proof in the form of an original valid or certified copy B-BBEE Status Level verification certificate in terms of the Construction Sector Charter on Black Economic Empowerment, or an Exempted Micro Enterprise certificate issued by a registered auditor, accounting officer (as contemplated in section 60(4) of the Close Corporation Act, 1984 (Act No. 69 of 1984)) or an accredited verification agency, or certified copies thereof) in terms of the Preferential Procurement Regulations, 2022.

Consortiums/Joint Ventures will qualify for preference points, provided that the entity submits the relevant certificate/scorecard in terms of the Preferential Procurement Regulations, 2022. In the case of unincorporated entities, a verified scorecard in the name of the Consortium/Joint Venture must be submitted with the tender.

C.3 The employer's undertaking

C.3.4 **Opening of tender submission**

Add the following:

The time and location for opening of the tender offers are:

Time Tenders will be opened immediately after the closing time for receipt of tender as stated in the Tender Notice and Invitation to Tender, or as stated in any Addendum extending the closing date.

Location: Bids will be opened in the Boardroom of Stellenbosch Municipality in public.

C.3.8 Test for responsiveness

Add the following to F3.8:

Tenders will be considered non-responsive if:

- the tender is not in compliance with the Scope of Work;
- the tenderer does not comply with the CIDB contractor grading designation as specified in C.2.1.2 above;
- the tenderer has failed to clarify or submit any supporting documentation within the time for submission stated in the Employer's written request.

C.3.9 Arithmetical errors, omissions and discrepancies

Delete the contents of Subclauses C.3.9.2 to C.3.9.4 and replace with the following:

STELLENBOSCH
STELLENBOSCH • PNIEL • FRANSCHHOEK
MUNISIPALITEIT • UMASIPALA • MUNICIPALITY

C.3.9.2 Check responsive tender offers for:

(a) the gross misplacement of the decimal point in any unit rate;
(b) omissions made in completing the pricing schedule or bills of quantities; or
(c) arithmetic errors in:
  (i) line item totals resulting from the product of a unit rate and a quantity in bills of quantities or schedules of prices; or
  (ii) the summation of the prices.

C.3.9.3 Correct arithmetic errors in the following manner:

(a) If bill of quantities (or schedule of quantities) or pricing schedules apply and there is an error in the line item total resulting from the product of the unit rate and the quantity, the unit rate shall govern and the line item total shall be corrected.
(b) Where there is an obviously gross misplacement of the decimal point in the unit rate, the line item total as quoted shall govern, and the unit rate shall be corrected.
(c) Where there is an error in the total of the prices either as a result of other corrections required by this checking process or in the tenderer's addition of prices, the total of the prices shall be corrected.

C.3.9.4 Notify the highest ranked tender or tenderer with the highest number of tender evaluation points after the evaluation of tender offers in accordance with C.3.11 of all errors or omissions that are identified in the tender offer and invite the tenderer to confirm the tender offer as tendered and accept the corrected total of prices.

C.3.9.5 Check responsive tender offers for unbalanced unit rates and request tenderers to consider amending and adjusting any rates declared unbalanced by the Employer in accordance with C.4.3 while retaining the total of the prices derived after any correction made in terms of this condition to tender.

Reject a tender offer if the tenderer does not correct or accept the correction of arithmetical errors and consider rejection of a tender offer if the tenderer refuses to amend/adjust an unreasonable, unbalanced rate in the manner described above.

C.3.11 Evaluation of tender offers

F.3.11.1 General
Add the following:
The tender evaluation method for the evaluation of all responsive tender offers will be **Method 2: Financial Offer and Preference** in accordance with C.3.11.3.

C.3.11.3 **Method 2: Financial offer and preferences**

The procedure for the evaluation of responsive tenders is **Method 2,** where the total number of tender evaluation points, $T_{EV} = N_{FO} + N_{P1}$ as detailed below.

Where N_{FO} is the number of tender evaluation points awarded for the financial offer made in accordance with C.3.11.7
N_{P1} is the number of tender evaluation points awarded for B-BBEE Status Level Contribution in accordance with C.3.11.8

C.3.11.7 **Scoring financial offers**
Add the following:
The financial offer will be scored using Formula 2 (Option 1) where the value of W_1:

(2) 80 points where the financial value inclusive of VAT of all responsive tenders received equals or is less than R50 000 000,00

Should the financial value inclusive of VAT be below R 50 000 000, the financial offers will be scored using **Formula 2 (Option 1)** where the value of W_1 is: 8**0** tender evaluation points. Up to a maximum of 100 minus W_1 namely 2**0** tender evaluation points will be

awarded for Preference with responsive tenders scoring points in accordance with the **80/20 Financial Preference** scoring criteria listed below.

80 Financial /20 Preference	
Points	Description
	FINANCIAL OFFER
80	Price
	PREFERENCES
10	B-BBEE Status Level Contribution
10	LOCALITY

Add the following:
The financial offer will be scored using Formula 2 (Option 1) where the value of W_1:

(3) 90 points where the financial value inclusive of VAT of all responsive tenders received equals or exceed R50 000 000,00

Should the financial value inclusive of VAT exceed R 50 000 000, the financial offers will be scored using **Formula 2 (Option 1)** where the value of W_1 is: **90** tender evaluation points. Up to a maximum of 100 minus W_1 namely **10** tender evaluation points will be awarded for

Preference with responsive tenders scoring points in accordance with the **90/10 Financial Preference** scoring criteria listed below.

90 Financial /10 Preference	
Points	Description
	FINANCIAL OFFER
90	Price
	PREFERENCES
5	B-BBEE Status Level Contribution
5	LOCALITY

C.3.11.8 **Scoring preference**
Add the following:
A maximum of 100 minus W_1 tender evaluation points will be awarded for preference to tenderers who submit responsive tenders and who are found to be eligible for the preference claimed, in accordance with the criteria listed below.

Points are based on a tenderer's scorecard measured in terms of the Broad-Based Black Economic Empowerment Act (Act No 53 of 2003) (B-BBEE) and the Regulations, 2022 to the Preferential Procurement Policy Framework Act (Act No 5 of 2000) (PPPFA).
Points awarded will be according to a tenderer's B-BBEE status level of contribution and summarised in the table below:

B-BBEE Contribution Level	**80:20 Preference System**	**90:10 Preference System**
1	20	10
2	18	9
3	16	8
4	12	5
5	8	4
6	6	3
7	4	2
8	2	1
Non-compliant	0	0

Eligibility for preference points is subject to the following:

(a) A tenderer's scorecard shall be based on the Construction Sector Codes of Practice promulgated in Government Gazette No 32305 of 5 June 2009; and
(b) The scorecard shall be submitted as a certificate attached to Returnable Schedule Form C2; and
(c) The certificate shall have been issued by a registered verification agency accredited by the South African National Accreditation System (SANAS), as contemplated in the B-BBEE Framework for Accreditation and Verification by all Verification Agencies promulgated in Government Notice No 810 of 31 July 2009; and
(d) The date of issue of the certificate must be less than 12 (twelve) months prior to the advertised Tender closing date (see Tender Data C.2.15); and
(e) Compliance with any other information requested to be attached to Returnable Schedule Form C2.

Tenderers shall note the following Conditions of Clause 11 of the Preferential Procurement Regulations 2022:

(8) A tenderer (company/firm/entity) will not be awarded points for B-BBEE status level if it is indicated in the tender documents that such a tenderer intends sub-contracting more than 25% of the value of the contract to any other enterprises / sub-contractors that do not have an equal or higher B-BBEE Status Level than the prime contractor, unless the intended sub-contractors are Exempted Micro Enterprises that have the capability and ability to execute the sub-contract works;

(9) A prime contractor will not be awarded points for B-BBEE status level if he indicates in his tender that he intends sub-contracting more than 25% of the value of the contract to sub-contractors that do not qualify for at least the points that the prime contractor qualifies for, unless the intended sub-contractors are Exempted Micro Enterprises that have the capability and ability to execute the sub-contract works.

Add the following new subclause:

C.3.11.10 **Risk Analysis**

Notwithstanding compliance with regard to CIDB registration or any other requirements of the tender, the employer will perform a risk analysis in respect of the following:

a) reasonableness of the financial offer;
b) reasonableness of unit rates and prices;
c) the tenderers ability to fulfil its obligations in terms of the tender document, that is, that the tenderer can demonstrate that he/she possesses the necessary professional and technical qualifications, professional and technical competence, financial resources, equipment and other physical facilities, managerial capability, reliability, experience, reputation, personnel to perform the contract, etc;
d) Minimum "C" Bank Rating as per Form A6 of the Returnable Schedules. A certificate will be obtained from the approved bank/institution to obtain the Bank Grading;
e) Minimum score for functionality of 80% (80 points) comprising of Proposed Key Personnel as per Form A3 of the Returnable Schedules as well as adequate experience as per From A2 of the Returnable Schedules as described in Part T1 section F3.30 of the Tender document.

No tenderer will be recommended for an award unless the tenderer has demonstrated that he/she has the resources and skills required.

C.3.13 Acceptance of tender offer

Add the following:

C.3.13.1 Tender offers will only be accepted if:

(a) the Tenderer attach a valid Tax Clearance Certificate issued by the South African Revenue Services to this bid document. Bidders must indicate their pin as provided by SARS to confirm validity of their Tax Clearance Certificate;
(b) the Tenderer submits a letter of intent from an approved insurer undertaking to provide the Performance Bond to the format included in Part T2.2 of this procurement document

(c) the Tenderer is registered with the Construction Industry Development Board in an appropriate contractor grading designation;
(d) the Tenderer or any of its directors/shareholders is not listed on the Register of Tender Defaulters in terms of the Prevention and Combating of Corrupt Activities Act of 2004, as a person prohibited from doing business with the public sector;
(e) the Tenderer has not:
  (i) abused the Employer's Supply Chain Management System; or
  (ii) failed to perform on any previous contract and has been given a written notice to this effect;
(f) the Tenderer has completed the Compulsory Enterprise Questionnaire and there are no conflicts of interest which may impact on the Tenderer's ability to perform the Contract in the best interests of the Employer or potentially compromise the tender process;
(g) the Tenderer is registered and in good standing with the compensation fund or with a licensed compensation insurer;
(h) the Employer is reasonably satisfied that the Tenderer has in terms of the Construction Regulations, 2014, issued in terms of the Occupational Health and Safety Act, 1993, the necessary competencies and resources to carry out the work safely.
  (i) the Tenderer has not failed to perform on any previous contracts and has not been given a written notice to this effect.

C.3.14 Prepare contract documents

C.3.14.1 If necessary, revise documents that shall form part of the contract and that were issued by the employer as part of the tender documents to take account of:

a) addenda issued during the tender period,

b) inclusion of some of the returnable documents, and

c) other revisions agreed between the employer and the successful tenderer.

C.3.14.2 Complete the schedule of deviations attached to the form of offer and acceptance, if any.

C.3.15 Complete adjudicator's contract

Unless alternative arrangements have been agreed or otherwise provided for in the contract, arrange for both parties to complete formalities for appointing the selected adjudicator at the same time as the main contract is signed.

C.3.15.1 **Disputes, objections, complaints and queries**

In terms of Regulations 49 and 50 of the Local Government: Municipal Finance Management Act, 56 of 2003 – Municipal Supply Chain Management Regulations (Board Notice 868 of 2005):

a) Persons aggrieved by decisions or actions taken by the Stellenbosch Municipality in the implementation of its supply chain management system, may lodge within 14 days of the decision or action, a written objection or complaint or query or dispute against the decision or action.
b) Objections, complaints, queries and disputes must be submitted in writing to the Municipal Manager, Stellenbosch Municipality, PO Box 17, Stellenbosch.

C.3.15.2 **Appeals**

a) In terms of Section 62 of the Local Government: Municipal Systems Act, 32 of 2000 a person whose rights are affected by a decision taken by the Stellenbosch Municipality in the implementation of its supply chain management system, may appeal against that decision by giving written notice of the appeal and reasons to the Stellenbosch Municipality Manager within 21 days of the date of the notification of the decision.
b) An appeal must contain the following:
  i) Reasons and/or grounds for the appeal
  ii) The way in which the appellants rights have been affected
  iii) Remedy sought by appellant
c) Appeals must be submitted in writing to the Municipal Manager, Stellenbosch Municipality, PO Box 17, Stellenbosch.

C.3.16 Registration of the award

An employer must, within twenty-one (21) working days from the date on which a contractor's offer to perform a construction works contract is accepted in writing by the employer, register and publish the award on the cidb Register of Projects.

C.3.16.1 Before accepting the tender of the successful tenderer the Employer shall notify the successful tenderer in writing of the decision of the Employer's Bid Adjudication Committee to award the tender to the successful tenderer. No rights shall accrue to the successful tenderer in terms of this notice, and only once the processes described in F.3.13.2 and F.3.13.3 above have been completed can the Employer sign the Acceptance part of the Form of Offer and Acceptance.

Replace sub-clause F.3.16.2 with the following:

C.3.16.2 The Employer shall, at the same time as notifying the successful tenderer of the Bid Adjudication Committee's decision to award the tender to the successful tenderer, also give written notice to the other tenderers informing them that they have been unsuccessful.

C.3.17 **Provide copies of the contract**

Add the following:

The number of paper copies of the signed Contract to be provided by the Employer is one.

The additional Conditions of Tender are:

C.3.18 Provide written reasons for actions taken

Provide upon request written reasons to tenderers for any action that is taken in applying these conditions of tender, but withhold information, which is not in the public interest to be divulged, which is considered to prejudice the legitimate commercial interests of tenderers or might prejudice fair competition between tenderers

STELLENBOSCH
STELLENBOSCH • PNIEL • FRANSCHHOEK
MUNISIPALITEIT • UMASIPALA • MUNICIPALITY

T1.3 Standard Conditions of Tender

C.1 General

C.1.1 Actions

C.1.1.1 The employer and each tenderer submitting a tender offer shall comply with these conditions of tender. In their dealings with each other, they shall discharge their duties and obligations as set out in C.2 and C.3, timeously and with integrity, and behave equitably, honestly and transparently, comply with all legal obligations and not engage in anticompetitive practices.

C.1.1.2 The employer and the tenderer and all their agents and employees involved in the tender process shall avoid conflicts of interest and where a conflict of interest is perceived or known, declare any such conflict of interest, indicating the nature of such conflict. Tenderers shall declare any potential conflict of interest in their tender submissions. Employees, agents and advisors of the employer shall declare any conflict of interest to whoever is responsible for overseeing the procurement process at the start of any deliberations relating to the procurement process or as soon as they become aware of such conflict, and abstain from any decisions where such conflict exists or recuse themselves from the procurement process, as appropriate.

Note: *1) A conflict of interest may arise due to a conflict of roles which might provide an incentive for improper acts in some circumstances. A conflict of interest can create an appearance of impropriety that can undermine confidence in the ability of that person to act properly in his or her position even if no improper acts result.*

2) Conflicts of interest in respect of those engaged in the procurement process include direct, indirect or family interests in the tender or outcome of the procurement process and any personal bias, inclination, obligation, allegiance or loyalty which would in any way affect any decisions taken.

C.1.1.3 The employer shall not seek and a tenderer shall not submit a tender without having a firm intention and the capacity to proceed with the contract.

C.1.2 Tender Documents

The documents issued by the employer for the purpose of a tender offer are listed in the tender data.

C.1.3 Interpretation

C.1.3.1 The tender data and additional requirements contained in the tender schedules that are included in the returnable documents are deemed to be part of these conditions of tender.

C.1.3.2 These conditions of tender, the tender data and tender schedules which are only required for tender evaluation purposes, shall not form part of any contract arising from the invitation to tender.

C.1.3.3 For the purposes of these conditions of tender, the following definitions apply:

a) **conflict of interest** means any situation in which:
   i) someone in a position of trust has competing professional or personal interests which make it difficult to fulfill his or her duties impartially;
   ii) an individual or organisation is in a position to exploit a professional or official capacity in some way for their personal or corporate benefit; or
   iii) incompatibility or contradictory interests exist between an employee and the organisation which employs that employee.

b) **comparative offer** means the price after the factors of a non-firm price and all unconditional discounts it can be utilised to have been taken into consideration;
c) **corrupt practice** means the offering, giving, receiving or soliciting of anything of value to influence the action of the employer or his staff or agents in the tender process;
d) **fraudulent practice** means the misrepresentation of the facts in order to influence the tender process or the award of a contract arising from a tender offer to the detriment of the employer, including collusive practices intended to establish prices at artificial levels;
e) **organization** means a company, firm, enterprise, association or other legal entity, whether incorporated or not, or a public body;
f) **functionality** means the totality of features and characteristics of a product or service that bear on its ability to satisfy stated or implied needs.

C.1.4 Communication and employer's agent

Each communication between the employer and a tenderer shall be to or from the employer's agent only, and in a form that can be readily read, copied and recorded. Communications shall be in the English language. The employer shall not take any responsibility for non-receipt of communications from or by a tenderer. The name and contact details of the employer's agent are stated in the tender data.

C.1.5 Cancellation and Re-Invitation of Tenders

C.1.5.1 An organ of state may, prior to the award of the tender, cancel a tender if-

(a) due to changed circumstances, there is no longer a need for the services, works or goods requested; or

(b) funds are no longer available to cover the total envisaged expenditure; or (c) no acceptable tenders are received.

C.1.5.2 The decision to cancel a tender must be published in the cidb website and in the governmentTender Bulletin for the media in which the original tender invitation was advertised.

C.1.6 Procurement procedures

C.1.6.1 General

Unless otherwise stated in the tender data, a contract will, subject to C.3.13, be concluded with the tenderer who in terms of C.3.11 is the highest ranked or the tenderer scoring the highest number of tender evaluation points, as relevant, based on the tender submissions that are received at the closing time for tenders.

C.1.6.2 Competitive negotiation procedure

C.1.6.2.1 Where the tender data require that the competitive negotiation procedure is to be followed, tenderers shall submit tender offers in response to the proposed contract in the first round of submissions. Notwithstanding the requirements of C.3.4, the employer shall announce only the names of the tenderers who make a submission. The requirements of
C.3.8 relating to the material deviations or qualifications which affect the competitive position of tenderers shall not apply.

C.1.6.2.2 All responsive tenderers, or not less than three responsive tenderers that are highest ranked in terms of the evaluation method and evaluation criteria stated in the tender data, shall be invited in each round to enter into competitive negotiations, based on the principle of equal treatment and keeping confidential the proposed solutions and associated information. Notwithstanding the provisions of C.2.17, the employer may request that tenders be clarified, specified and fine-tuned in order to improve a tenderer's competitive position provided that such clarification, specification, fine-tuning or additional information does not alter any fundamental aspects of the offers or impose substantial new requirements which restrict or distort competition or have a discriminatory effect.

C.1.6.2.3 At the conclusion of each round of negotiations, tenderers shall be invited by the employer to make a fresh tender offer, based on the same evaluation criteria, with or without adjusted weightings. Tenderers shall be advised when they are to submit their best and final offer.

C.1.6.2.4 The contract shall be awarded in accordance with the provisions of C.3.11 and C.3.13 after tenderers have been requested to submit their best and final offer.

C.1.6.3 Proposal procedure using the two stage-system

C.1.6.3.1 Option 1

Tenderers shall in the first stage submit technical proposals and, if required, cost parameters around which a contract may be negotiated. The employer shall evaluate each responsive submission in terms of the method of evaluation stated in the tender data, and in the second stage negotiate a contract with the tenderer scoring the highest number of evaluation points and award the contract in terms of these conditions of tender.

C.1.6.3.2 Option 2

C.1.6.3.2.1 Tenderers shall submit in the first stage only technical proposals. The employer shall invite all responsive tenderers to submit tender offers in the second stage, following the issuing of procurement documents.

C.1.6.3.2.2 The employer shall evaluate tenders received during the second stage in terms of the method of evaluation stated in the tender data, and award the contract in terms of these conditions of tender.

C.2 Tenderer's obligations

C.2.1 Eligibility

C.2.1.1 Submit a tender offer only if the tenderer satisfies the criteria stated in the tender data and the tenderer, or any of his principals, is not under any restriction to do business with employer.

C.2.1.2 Notify the employer of any proposed material change in the capabilities or formation of the tendering entity (or both) or any other criteria which formed part of the qualifying requirements used by the employer as the basis in a prior process to invite the tenderer to submit a tender offer and obtain the employer's written approval to do so prior to the closing time for tenders.

C.2.2 Cost of tendering

C.2.2.1 Accept that, unless otherwise stated in the tender data, the employer will not compensate the tenderer for any costs incurred in the preparation and submission of a tender offer, including the costs of any testing necessary to demonstrate that aspects of the offer complies with requirements.

C.2.2.2 The cost of the tender documents charged by the employer shall be limited to the actual cost incurred by the employer for printing the documents. Employers must attempt to make available the tender documents on its website so as not to incur any costs pertaining to the printing of the tender documents.

C.2.3 Check documents

Check the tender documents on receipt for completeness and notify the employer of any discrepancy or omission.

C.2.4 Confidentiality and copyright of documents

Treat as confidential all matters arising in connection with the tender. Use and copy the documents issued by the employer only for the purpose of preparing and submitting a tender offer in response to the invitation.

C.2.5 Reference documents

Obtain, as necessary for submitting a tender offer, copies of the latest versions of standards, specifications, conditions of contract and other publications, which are not attached but which are incorporated into the tender documents by reference.

C.2.6 Acknowledge addenda

Acknowledge receipt of addenda to the tender documents, which the employer may issue, and if necessary apply for an extension to the closing time stated in the tender data, in order to take the addenda into account.

C.2.7 Clarification meeting

Attend, where required, a clarification meeting at which tenderers may familiarize themselves with aspects of the proposed work, services or supply and raise questions. Details of the meeting(s) are stated in the tender data.

C.2.8 Seek clarification

Request clarification of the tender documents, if necessary, by notifying the employer at least five working days before the closing time stated in the tender data.

C.2.9 Insurance

The successful tenderer shall within two weeks after receiving a completed copy of this agreement, including the schedule of deviations (if any), contact the employer's agent (whose details are given in the contract data) to arrange the delivery of any bonds, guarantees, proof of insurance and any other documentation to be provided in terms of the conditions of contract identified in the contract data at, or just after, the date this agreement comes into effect. Failure to fulfil any of these obligations in accordance with those terms shall constitute a repudiation of this agreement

The Contractor shall produce for inspection documentary evidence that the insurances required are being properly maintained when required to do so by the Client.

C.2.10 Pricing the tender offer

C.2.10.1 Include in the rates, prices, and the tendered total of the prices (if any) all duties, taxes (except Value Added Tax (VAT), and other levies payable by the successful tenderer, such duties, taxes and levies being those applicable 14 days before the closing time stated in the tender data.

C.2.10.2 Show VAT payable by the employer separately as an addition to the tendered total of the prices.

C.2.10.3 Provide rates and prices that are fixed for the duration of the contract and not subject to adjustment except as provided for in the conditions of contract identified in the contract data.

C.2.10.4 State the rates and prices in Rand unless instructed otherwise in the tender data. The conditions of contract identified in the contract data may provide for part payment in other currencies.

C.2.11 Alterations to documents

Do not make any alterations or additions to the tender documents, except to comply with instructions issued by the employer, or necessary to correct errors made by the tenderer. All signatories to the tender offer shall initial all such alterations.

C.2.12 Alternative tender offers

C.2.12.1 Unless otherwise stated in the tender data, submit alternative tender offers only if a main tender offer, strictly in accordance with all the requirements of the tender documents, is also submitted as well as a schedule that compares the requirements of the tender documents with the alternative requirements that are proposed.

C.2.12.2 Accept that an alternative tender offer may be based only on the criteria stated in the tender data or criteria otherwise acceptable to the employer.

C.2.12.3 An alternative tender offer may only be considered in the event that the main tender offer is the winning tender.

C.2.13 Submitting a tender offer

C.2.13.1 Submit one tender offer only, either as a single tendering entity or as a member in a joint venture to provide the whole of the works, services or supply identified in the contract data and described in the scope of works, unless stated otherwise in the tender data.

C.2.13.2 Return all returnable documents to the employer after completing them in their entirety, either electronically (if they were issued in electronic format) or by writing legibly in non-erasable ink.

C.2.13.3 Submit the parts of the tender offer communicated on paper as an original plus the number of copies stated in the tender data, with an English translation of any documentation in a language other than English, and the parts communicated electronically in the same format as they were issued by the employer.

C.2.13.4 Sign the original and all copies of the tender offer where required in terms of the tender data. The employer will hold all authorized signatories liable on behalf of the tenderer. Signatories for tenderers proposing to contract as joint ventures shall state which of the signatories is the lead partner whom the employer shall hold liable for the purpose of the tender offer.

C.2.13.5 Seal the original and each copy of the tender offer as separate packages marking the packages as "ORIGINAL" and "COPY". Each package shall state on the outside the employer's address and identification details stated in the tender data, as well as the tenderer's name and contact address.

C.2.13.6 Where a two-envelope system is required in terms of the tender data, place and seal the returnable documents listed in the tender data in an envelope marked —financial proposall and place the remaining returnable documents in an envelope marked —technical proposall. Each envelope shall state on the outside the employer’s address and identification details stated in the tender data, as well as the tenderer's name and contact address.

C.2.13.7 Seal the original tender offer and copy packages together in an outer package that states on the outside only the employer's address and identification details as stated in the tender data.

C.2.13.8 Accept that the employer will not assume any responsibility for the misplacement or premature opening of the tender offer if the outer package is not sealed and marked as stated.

C.2.13.9 Accept that tender offers submitted by facsimile or e-mail will be rejected by the employer, unless stated otherwise in the tender data.

C.2.14 Information and data to be completed in all respects

Accept that tender offers, which do not provide all the data or information requested completely and, in the form, required, may be regarded by the employer as non-responsive.

C.2.15 Closing time

C.2.15.1 Ensure that the employer receives the tender offer at the address specified in the tender data not later than the closing time stated in the tender data. Accept that proof of posting shall not be accepted as proof of delivery.

C.2.15.2 Accept that, if the employer extends the closing time stated in the tender data for any reason, the requirements of these conditions of tender apply equally to the extended deadline.

C.2.16 Tender offer validity

C.2.16.1 Hold the tender offer(s) valid for acceptance by the employer at any time during the validity period stated in the tender data after the closing time stated in the tender data.

C.2.16.2 If requested by the employer, consider extending the validity period stated in the tender data for an agreed additional period with or without any conditions attached to such extension.

C.2.16.3 Accept that a tender submission that has been submitted to the employer may only be withdrawn or substituted by giving the employer's agent written notice before the closing time for tenders that a tender is to be withdrawn or substituted.

C.2.16.4 Where a tender submission is to be substituted, submit a substitute tender in accordance with the requirements of C.2.13 with the packages clearly marked as —SUBSTITUTEl.

C.2.17 Clarification of tender offer after submission

Provide clarification of a tender offer in response to a request to do so from the employer during the evaluation of tender offers. This may include providing a breakdown of rates or prices and correction of arithmetical errors by the adjustment of certain rates or item prices (or both). No change in the competitive position of tenderers or substance of the tender offer is sought, offered, or permitted.

Note: *Sub-clause C.2.17 does not preclude the negotiation of the final terms of the contract with a preferred tenderer following a competitive selection process, should the Employer elect to do so.*

C.2.18 Provide other material

C.2.18.1 Provide, on request by the employer, any other material that has a bearing on the tender offer, the tenderer's commercial position (including notarized joint venture agreements), preferencing arrangements, or samples of materials, considered necessary by the employer for the purpose of a full and fair risk assessment. Should the tenderer not provide the material, or a satisfactory reason as to why it cannot be provided, by the time for submission stated in the employer's request, the employer may regard the tender offer as non-responsive.

C.2.18.2 Dispose of samples of materials provided for evaluation by the employer, where required.

C.2.19 Inspections, tests and analysis

Provide access during working hours to premises for inspections, tests and analysis as provided for in the tender data.

C.2.20 Submit securities, bonds and policies

The successful tenderer must submit for the employer's acceptance before formation of the contract, all securities, bonds, guarantees, policies and certificates of insurance required in terms of the conditions of contract identified in the contract data.

C.2.21 Check final draft

Check the final draft of the contract provided by the employer within the time available for the employer to issue the contract.

C.2.22 Return of other tender documents

If so instructed by the employer, return all retained tender documents within 28 days after the expiry of the validity period stated in the tender data.

C.2.23 Certificates

Include in the tender submission or provide the employer with any certificates as stated in the tender data.

C.3 The employer's undertakings

C.3.1 Respond to requests from the tenderer

C.3.1.1 Unless otherwise stated in the tender Data, respond to a request for clarification received up to five working days before the tender closing time stated in the Tender Data and notify all tenderers who drew procurement documents.

C.3.1.2 Consider any request to make a material change in the capabilities or formation of the tendering entity (or both) or any other criteria which formed part of the qualifying requirements used to prequalify a tenderer to submit a tender offer in terms of a previous procurement process and deny any such request if as a consequence:

a) an individual firm, or a joint venture as a whole, or any individual member of the joint venture fails to meet any of the collective or individual qualifying requirements;
b) the new partners to a joint venture were not prequalified in the first instance, either as individual firms or as another joint venture; or
c) in the opinion of the Employer, acceptance of the material change would compromise the outcome of the prequalification process.

C.3.2 Issue Addenda

If necessary, issue addenda that may amend or amplify the tender documents to each tenderer during the period from the date that tender documents are available until three days before the tender closing time stated in the Tender Data. If, as a result a tenderer applies for an extension to the closing time stated in the Tender Data, the Employer may grant such extension and, shall then notify all tenderers who drew documents.

C.3.3 Return late tender offers

Return tender offers received after the closing time stated in the Tender Data, unopened, (unless it is necessary to open a tender submission to obtain a forwarding address), to the tenderer concerned.

C.3.4 Opening of tender submissions

C.3.4.1 Unless the two-envelope system is to be followed, open valid tender submissions in the presence of tenderers' agents who choose to attend at the time and place stated in the tender data. Tender submissions for which acceptable reasons for withdrawal have been submitted will not be opened.

C.3.4.2 Announce at the meeting held immediately after the opening of tender submissions, at a venue indicated in the tender data, the name of each tenderer whose tender offer is opened and, where applicable, the total of his prices, number of points claimed for its BBBEE status level and time for completion for the main tender offer only.

C.3.4.3 Make available the record outlined in C.3.4.2 to all interested persons upon request.

C.3.5 Two-envelope system

C.3.5.1 Where stated in the tender data that a two-envelope system is to be followed, open only the technical proposal of valid tenders in the presence of tenderers' agents who choose to attend at the time and place stated in the tender data and announce the name of each tenderer whose technical proposal is opened.

C.3.5.2 Evaluate functionality of the technical proposals offered by tenderers, then advise tenderers who remain in contention for the award of the contract of the time and place when the financial proposals will be opened. Open only the financial proposals of tenderers, who score in the functionality evaluation more than the minimum number of points for functionality stated in the tender data, and announce the score obtained for the technical proposals and the total price and any points claimed on BBBEE status level. Return unopened financial proposals to tenderers whose technical proposals failed to achieve the minimum number of points for functionality.

C.3.6 Non-disclosure

Not disclose to tenderers, or to any other person not officially concerned with such processes, information relating to the evaluation and comparison of tender offers, the final evaluation price and recommendations for the award of a contract, until after the award of the contract to the successful tenderer.

C.3.7 Grounds for rejection and disqualification

Determine whether there has been any effort by a tenderer to influence the processing of tender offers and instantly disqualify a tenderer (and his tender offer) if it is established that he engaged in corrupt or fraudulent practices.

C.3.8 Test for responsiveness

C.3.8.1 Determine, after opening and before detailed evaluation, whether each tender offer properly received:

a) complies with the requirements of these Conditions of Tender,
b) has been properly and fully completed and signed, and
c) is responsive to the other requirements of the tender documents.

C.3.8.2 A responsive tender is one that conforms to all the terms, conditions, and specifications of the tender documents without material deviation or qualification. A material deviation or qualification is one which, in the Employer*'s* opinion, would:

a) detrimentally affect the scope, quality, or performance of the works, services or supply identified in the Scope of Work*,*

b) significantly change the Employer*'s* or the tenderer's risks and responsibilities under the contract, or

c) affect the competitive position of other tenderers presenting responsive tenders, if it were to be rectified.

Reject a non-responsive tender offer, and not allow it to be subsequently made responsive by correction or withdrawal of the non-conforming deviation or reservation.

C.3.9 Arithmetical errors, omissions and discrepancies

C.3.9.1 Check the highest ranked tender or tenderer with the highest number of tender evaluation points after the evaluation of tender offers in accordance with C.3.11 for:

a) the gross misplacement of the decimal point in any unit rate;

b) omissions made in completing the pricing schedule or bills of quantities; or c) arithmetic errors in:

i) line item totals resulting from the product of a unit rate and a quantity in bills of quantities or schedules of prices; or

ii) the summation of the prices.

C.3.9.2 The employer must correct the arithmetical errors in the following manner:

a) Where there is a discrepancy between the amounts in words and amounts in figures, the amount in words shall govern.

b) If bills of quantities or pricing schedules apply and there is an error in the line item total resulting from the product of the unit rate and the quantity, the line item total shall govern and the rate shall be corrected. Where there is an obviously gross misplacement of the decimal point in the unit rate, the line item total as quoted shall govern, and the unit rate shall be corrected.

c) Where there is an error in the total of the prices either as a result of other corrections required by this checking process or in the tenderer's addition of prices, the total of the prices shall govern and the tenderer will be asked to revise selected item prices (and their rates if bills of quantities apply) to achieve the tendered total of the prices.

Consider the rejection of a tender offer if the tenderer does not correct or accept the correction of the arithmetical error in the manner described above.

C.3.10 Clarification of a tender offer

Obtain clarification from a tenderer on any matter that could give rise to ambiguity in a contract arising from the tender offer.

C.3.11 Evaluation of tender offers

C.3.11.1 General

Appoint an evaluation panel of not less than three persons. Reduce each responsive tender offer to a comparative offer and evaluate them using the tender evaluation methods and associated evaluation criteria and weightings that are specified in the tender data.

C.3.11.2 Method 1: Price and Preference

In the case of a price and preference:

1) Score tender evaluation points for price
2) Score points for BBBEE contribution
3) Add the points scored for price and BBBEE.

C.3.11.3 Method 2: Functionality, Price and Preference

In the case of a functionality, price and preference:

1) Score functionality, rejecting all tender offers that fail to achieve the minimum number of points for functionality as stated in the Tender Data.
2) No tender must be regarded as an acceptable tender if it fails to achieve the minimum qualifying score for functionality as indicated in the tender invitation.
3) Tenders that have achieved the minimum qualification score for functionality must be evaluated further in terms of the preference points system prescribed in paragraphs 4 and 4 and 5 below.

The 80/20 preference point system for acquisition of services, works or goods up to Rand value of R 50 million.

4) (a)(i)(i) The following formula must be used to calculate the points for price in respect of tenders (including price quotation) with a rand value equal to, or above R 200 000 and up to Rand value of R 50 000 000 (all applicable taxes included):

$$Ps = 80\left(1 - \frac{Pt - P\,min}{P\,min}\right)$$

Where

Ps = Points scored for comparative price of tender or offer under consideration; Pt = Comparative price of tender or offer under consideration; and Pmin = Comparative price of lowest acceptable tender or offer.

The 90/10 preference point system for acquisition of services, works or goods above the Rand value of R 50 million.

(a)(i)(ii) The following formula must be used to calculate the points for price in respect of tenders (including price quotation) with a rand value equal to, or above R 200 000 and above the Rand value of R 50 000 000 (all applicable taxes included):

$$Ps = 90\left(1 - \frac{Pt - P\,min}{P\,min}\right)$$

Where

Ps = Points scored for comparative price of tender or offer under consideration; Pt = Comparative price of tender or offer under consideration; and Pmin = Comparative price of lowest acceptable tender or offer.

(4)(a)(ii) An employer of state may apply the formula in paragraph (i) for price quotations with a value less than R200 000, if and when appropriate:

(4)(b)(i) Subject to subparagraph(4)(c), points must be awarded to a tender for attaining the B-BBEE status level of contributor in accordance with the table below (**Should the financial value inclusive of VAT be below (80/20) or above (90/10) R 50 000 000**):

B-BBEE Contribution Level	80:20 Preference System	90:10 Preference System
1	20	10
2	18	9
3	16	8
4	12	5
5	8	4
6	6	3
7	4	2
8	2	1
Non-compliant	0	0

(4)(c) A maximum of 20 or 10 points may be allocated in accordance with subparagraph (4)(b)

(4)(d) The points scored by tender in respect of B-BBEE contribution contemplated in contemplated in subparagraph (4) (b) must be added to the points scored for price as calculated in accordance with subparagraph (4)(a).

(4)(e) Subject to paragraph 4.3.8 the contract must be awarded to the tender who scores the highest total number of points.

(f) In terms of Regulation 11 of the Preferential Procurement Regulations 2022, a contract may be awarded to a tenderer that did not score the highest points, only in accordance with section 2(1)(f) of the Preferential Procurement Policy Framework Act (Act no 5 of 2000) and Regulation 11 of the Preferential Procurement Regulations 2022.

C.3.11.6 Decimal places

Score price, preference and functionality, as relevant, to two decimal places.

C.3.11.7 Scoring Price

Score price of remaining responsive tender offers using the following formula:

$N_{FO} = W_1 \times A$

where: N_{FO} is the number of tender evaluation points awarded for price.
W_1 is the maximum possible number of tender evaluation points awarded for price as stated in the Tender Data.
A is a number calculated using the formula and option described in Table F.1 as stated in the Tender Data.

Table F.1: Formulae for calculating the value of A

Formula	Comparison aimed at achieving	Option 1	Option 2
1	Highest price or discount	$A = (1 + (\frac{P - Pm}{Pm}))$	$A = P / Pm$
2	Lowest price or percentage commission / fee	$A = (1 - (\frac{P - Pm}{Pm}))$	$A = Pm / P$
a P_m is the comparative offer of the most favourable comparative offer. P is the comparative offer of the tender offer under consideration.			

C.3.11.8 Scoring preferences

Confirm that tenderers are eligible for the preferences claimed in accordance with the provisions of the tender data and reject all claims for preferences where tenderers are not eligible for such preferences. Calculate the total number of tender evaluation points for preferences claimed in accordance with the provisions of the tender data.

C.3.11.9 Scoring functionality

Score each of the criteria and sub criteria for quality in accordance with the provisions of the Tender Data.

Calculate the total number of tender evaluation points for quality using the following formula:

$$N_Q = W_2 \times S_O / M_S$$

where: S_O *is the score for quality allocated to the submission under consideration;*
M_S *is the maximum possible score for quality in respect of a submission; and*
W_2 *is the maximum possible number of tender evaluation points awarded for the quality as stated in the tender data.*

C.3.12 Insurance provided by the employer

No insurance is to be provided by the Employer for the duration of the contract.

C.3.13 Acceptance of tender offer

Accept the tender offer, if in the opinion of the employer, it does not present any risk and only if the tenderer:

a) is not under restrictions, or has principals who are under restrictions, preventing participating in the employer's procurement,
b) can, as necessary and in relation to the proposed contract, demonstrate that he or she possesses the professional and technical qualifications, professional and technical competence, financial resources, equipment and other physical facilities, managerial capability, reliability, experience and reputation, expertise and the personnel, to perform the contract,
c) has the legal capacity to enter into the contract,
d) is not insolvent, in receivership, under Business Rescue as provided for in chapter 6 of the Companies Act, 2008, bankrupt or being wound up, has his affairs administered by a court or a judicial officer, has suspended his business activities, or is subject to legal proceedings in respect of any of the foregoing,
e) complies with the legal requirements, if any, stated in the tender data, and
f) is able, in the opinion of the employer, to perform the contract free of conflicts of interest.

C.3.14 Prepare contract documents

C.3.14.1 If necessary, revise documents that shall form part of the contract and that were issued by the employer as part of the tender documents to take account of:

a) addenda issued during the tender period,
b) inclusion of some of the returnable documents, and
c) other revisions agreed between the employer and the successful tenderer.

C.3.14.2 Complete the schedule of deviations attached to the form of offer and acceptance, if any.

C.3.15 Complete adjudicator's contract
Unless alternative arrangements have been agreed or otherwise provided for in the contract, arrange for both parties to complete formalities for appointing the selected adjudicator at the same time as the main contract is signed.

C.3.16 Notice to unsuccessful tenderers

C.3.16.1 Notify the successful tenderer of the employer's acceptance of his tender offer by completing and returning one copy of the form of offer and acceptance before the expiry of the validity period stated in the tender data, or agreed additional period.

C.3.16.2 After the successful tenderer has been notified of the employer's acceptance of the tender, notify other tenderers that their tender offers have not been accepted.

C.3.17 Provide copies of the contracts
Provide to the successful tenderer the number of copies stated in the Tender Data of the signed copy of the contract as soon as possible after completion and signing of the form of offer and acceptance.

C.3.18 Provide written reasons for actions taken
Provide upon request written reasons to tenderers for any action that is taken in applying these conditions of tender, but withhold information which is not in the public interest to be divulged, which is considered to prejudice the legitimate commercial interests of tenderers or might prejudice fair competition between tenderers.

C.3.19 Transparency in the procurement process
C.3.19.1 The CIDB prescripts require that tenders must be advertised and be registered on the CIDB Tender system.

C.3.19.2 The employer must adopt a transparency model that incorporates the disclosure and accountability as transparency requirements in the procurement process.
C.3.19.3 The transparency model must identify the criteria for selection of projects, project information template and the threshold value of the projects to be disclosed in the public domain at various intervals of delivery of infrastructure projects.

C.3.19.4 The client must publish the information on a quarterly basis which contains the following information:

- Procurement planning process
- Procurement method and evaluation process
- Contract type
- Contract status
- Number of firms tendering
- Cost estimate
- Contract title
- Contract firm(s)

- Contract price
- Contract scope of work
- Contract start date and duration
- Contract evaluation reports
-

C.3.19.5 The employer must establish a Consultative Forum which will conduct a random audit in the implementation of the transparency requirements in the procurement process.

C.3.19.6 Consultative Forum must be an independent structure from the bid

committees.

C.3.19.7 The information must be published on the employer's website.

C.3.19.8 Records of such disclosed information must be retained for audit purposes.

STELLENBOSCH
STELLENBOSCH • PNIEL • FRANSCHHOEK
MUNISIPALITEIT • UMASIPALA • MUNICIPALITY

Annex G
(normative)

Alpha-numeric associated with the Contractor Grading Designations

Table G1: Contractor grading designations and associated parameters

Contractor Grading Designation	Tender Value Range designation	Maximum value of contract that a contractor is considered capable of performing (R)
1 (class of construction works)	1	500 000
2 (class of construction works)	2	1 000 000
3 (class of construction works)	3	3 000 000
4 (class of construction works)	4	6 000 000
5 (class of construction works)	5	10 000 000
6 (class of construction works)	6	20 000 000
7 (class of construction works)	7	60 000 000
8 (class of construction works)	8	200 000 000
9 (class of construction works)	9	No Limit

Table G2: Classes of construction work (see next page)

Table G2 CLASSES OF CONSTRUCTION WORK

Description	Designation	Definition	Basic works types	Examples
Civil engineering works	CE	Construction works that are primarily concerned with materials such as steel, concrete, earth and rock and their application in the development, extension, installation, maintenance, removal,	Water, sewerage, roads, railways, harbours and transport, urban development and municipal services	Structures such dam, grand stan swimming pool, The results of op earthworks and Township servi sewerage works
Electrical engineering works (Infrastructure)	EP	Construction works that are primarily concerned with development, extension, installation, removal, renovation, alteration or dismantling of engineering infrastructure: a) relating to the generation, transmission and distribution of electricity;	Electrical power generation, transmission, control and distribution equipment and systems.	Power gen Street and area Substations and Township Transmission Li Supervisory con
Electrical engineering works (buildings)	EB	Construction works that are primarily concerned with the installation, extension, modification or repair of electrical installations in or on any premises used for the transmission of electricity from a point of control to a point of consumption, including any	All electrical equipment forming an integral and permanent part of buildings and/or structures, including any wiring, cable jointing and laying and electrical overhead line construction	Electrical installa Electrical reticul building site Standby plant Verification and on premises

STELLENBOSCH
STELLENBOSCH • PNIEL • FRANSCHHOEK
MUNISIPALITEIT • UMASIPALA • MUNICIPALITY

Description	Designation	Definition	Basic works types	Examples
General building works	GB	Construction works that: a) are primarily concerned with the development, extension, installation, renewal, renovation, alteration, or dismantling of a permanent shelter for its occupants or contents;or b) cannot be categorised in terms of the definitions provided for civil	Buildings and ancillary works other than those categorised as being: c) civil engineering works; d) electrical engineering works; e) mechanical engineering works; or f) specialist works.	Buildings for domestic, industrial, institutional or commercial occupancies Car ports Fences other than classified as SS Stores Walls

Mechanical engineering works	ME	Construction works that are primarily concerned with the development, extension, installation, removal, alteration, renewal of engineering infrastructure for gas transmission and distribution, solid waste disposal, heating, ventilation and cooling, chemical works, metallurgical works, manufacturing, food processing and, materials handling	Machine systems including those relating to the environment of building interiors: a) gas transmission and distribution systems b) pipelines c) solid waste disposal d) materials handling, lifting machinery, heating, ventilation and cooling, pumps, e) continuous process systems f) chemical works, metallurgical works, manufacturing, food processing such as that in concentrator machinery and apparatus, oil and gas wells, smelters, cyanide plants, acid plants, metallurgical machinery,	Air-conditioning and mechanical ventilation Boiler installations and steam distribution Central heating Centralised hot water generation Cranes and hoists Dust and sawdust extraction Compressed air, gas and vacuum installations Conveyor and materials handling installations Continuous process systems involving chemical works, metallurgical works, oil and gas wells, acid plants, metallurgical machinery, equipment and apparatus, and works necessary for the beneficiation of metals, minerals, rocks, petroleum and organic substances and other chemical processes Kitchen equipment Laundry equipment Lift installations and escalators Refrigeration and cold rooms

STELLENBOSCH
STELLENBOSCH • PNIEL • FRANSCHHOEK
MUNISIPALITEIT • UMASIPALA • MUNICIPALITY

Description	Designation	Definition	Basic works types	Examples
Specialistworks	SB	A subset of construction works identified and defined by the Board that involves specialist capabilities for its execution	The extension, installation, repair, maintenance or renewal, or removal, of asphalt	
	SC		The development, extension, installation, removal, and dismantling, as relevant, associated with building excavations, shaft sinking and lateral earth support	
	SD		The development, extension, installation, repair, renewal, removal, or alteration of corrosion protection systems (cathodic, anodic and electrolytic)	
	SE		Demolition of buildings and engineering infrastructure and blasting	
	SF		The development, extension, installation, renewal, removal, renovation, alteration or dismantling of fire prevention and protection infrastructure (drencher and sprinkler systems and fire installation)	
	SG		The development, extension, installation, renewal, removal, renovation, alteration or dismantling of glazing, curtain walls and shop fronts	
	SH		The development, extension, installation, maintenance, renewal, removal, alteration or dismantling, as relevant, of landscaping, irrigation and horticultural	
	SI		The development, extension, installation, repair, maintenance, renewal, removal, renovation, alteration or, dismantling of lifts, escalators, travellators and hoisting	
	SJ		The development, installation, removal, or dismantling, as relevant, of piles and other specialized foundations for buildings and structures	
	SK		The installation, renewal, removal, alteration or dismantling, as relevant, road markings and signage	
	SL		The development, extension, installation, renewal, removal, renovation, alteration or dismantling of structural steelwork and scaffolding	
	SM		Timber buildings and structures	
	SN		The extension, installation, repair, maintenance, renewal, removal, renovation or alteration, as relevant, of the waterproofing of basements, roofs and walls using	
	SO		The development, extension, installation, renewal, removal, alteration or dismantling or demolition of water installations and soil and waste water drainage	
	SQ		The development, extension, installation, repair, removal, alteration, dismantling or demolition of precast concrete or steel fencing	

STELLENBOSCH
STELLENBOSCH • PNIEL • FRANSCHHOEK
MUNISIPALITEIT • UMASIPALA • MUNICIPALITY

T1.4 GENERAL CONDITIONS OF TENDER

1. Sealed tenders, with the **"B/SM 21/27: MAIN ROAD INTERSECTION IMPROVEMENTS: STRAND / ADAM TAS / ALEXANDER"** clearly endorsed on the envelope, must be deposited in the **tender box** at the offices of the Stellenbosch Municipality, Plein Street, Stellenbosch.
2. The tender must be lodged by the Tenderer in the tender box in the Main Hall Entrance, Stellenbosch Municipal Offices, Plein Street, Stellenbosch

PLEASE NOTE:

2.1. Tenders that are deposited in the incorrect box will not be considered.
2.2. Mailed, telegraphic or faxed tenders will not be accepted.
2.3. Documents may only be completed in non-erasable ink.
2.4. The use of correction fluid/tape is not allowed.
2.4.1. In the event of a mistake having been made, it shall be crossed out in ink and be accompanied by an initial at each and every alteration.
2.4.2. Alterations or deletions not signed by the Tenderer may render the tender invalid.
2.5. All bids must be submitted in writing on the official forms supplied (not to be re-typed)
2.6. All prices shall be quoted in South African currency and be **INCLUSIVE of VAT.**

3. Any Tender received after the appointed time for the closing of Tenders shall not be considered but shall be filed unopened with the other Tenders received or may be returned to the Tenderer at his request.
4. Tenders may not be telefaxed to the Municipality and therefore any tenders received by fax will **not** be considered.
5. Tenders shall be opened in public at the Stellenbosch Municipal Offices as soon as possible after the closing time for the receipt of tenders.
6. The Municipality shall have the right to summarily disqualify any Tenderer who, either at the date of submission of this tender or at the date of its award, is indebted to the Municipality in respect of any rental, levies, rates and/or service charges; ALTERNATIVELY;

6.1. That an agreement be signed whereby the Tenderer agrees that a percentage or fixed amount at the discretion of the Municipality, be deducted from payments due to him for this tender, until the debt is paid in full.

6.2. The tenderer shall declare **all** the Municipal account numbers in the Stellenbosch Area for which the enterprise or the proprietors or directors in their personal capacity is/ are responsible or co-responsible.

7. This bid will be evaluated and adjudicated according to the following criteria:

7.1. Relevant specifications
7.2. Value for money
7.3. Capability to execute the contract
7.4. PPPFA & associated regulations

8. Centralised Supplier Database

No Bids will be awarded to a bidder who is not registered on the Centralised Supplier Database (CSD).

The CSD supplier number starting with (MAAA) number is automatically generated by the Central Database System after successful registration and validation of a prospective service provider. This number is now a mandatory requirement, as referred to in regulation 14(1) *(b)* of the Municipal Supply Chain Management Regulations, as part of the listing criteria for accrediting a prospective service provider. Prospective suppliers should self – register on the CSD website at www.csd.gov.za Registration on the CSD will be compulsory in order to conduct business with the STELLENBOSCH MUNICIPALITY. Registration on CSD can be done by contacting 021 808 8594 or Nicolene.Hamilton@stellenbosch.gov.za

Centralised Supplier Database No. MAAA……

STELLENBOSCH
STELLENBOSCH • PNIEL • FRANSCHHOEK
MUNISIPALITEIT • UMASIPALA • MUNICIPALITY

PART T2 RETURNABLE DOCUMENTS

T2.1 LIST OF RETURNABLE DOCUMENTS 48

T2.2 RETURNABLE SCHEDULES 49

T2.1 LIST OF RETURNABLE DOCUMENTS

The Tenderer must complete the following returnable documents:

1	RETURNABLE SCHEDULES REQUIRED FOR TENDER EVALUATION PURPOSES
2	OTHER DOCUMENTS REQUIRED FOR TENDER EVALUATION PURPOSES
3	RETURNABLE SCHEDULES THAT WILL BE INCORPORATED INTO THE CONTRACT
4	OTHER DOCUMENTS THAT WILL BE INCORPORATED INTO THE CONTRACT
5	C1.1 OFFER AND ACCEPTANCE (INCLUDED IN PART C1: AGREEMENT AND CONTRACT DATA)
6	C1.2 CONTRACT DATA (PART 2) DATA PROVIDED BY THE CONTRACTOR (INCLUDED IN PART C1: AGREEMENT AND CONTRACT DATA)
7	C1.3 PERFORMANCE GUARANTEE (PRO FORMA) (INCLUDED IN PART C1: AGREEMENT AND CONTRACT DATA)
8	C1.4 AGREEMENT IN TERMS OF OCCUPATIONAL HEALTH AND SAFETY ACT, 1993 (ACT NO 85 OF 1993) (INCLUDED IN PART C1: AGREEMENT AND CONTRACT DATA)
9	C1.5 CONTRACT OF TEMPORARY EMPLOYMENT OF COMMUNITY LIAISON OFFICER
10	C2.2 BILL OF QUANTITIES (INCLUDED IN PART C2: PRICING DATA)

STELLENBOSCH
STELLENBOSCH • PNIEL • FRANSCHHOEK
MUNISIPALITEIT • UMASIPALA • MUNICIPALITY

T2.2 RETURNABLE SCHEDULES

The Tenderer must complete the following returnable documents.

T2.2.1 RETURNABLE SCHEDULES REQUIRED FOR TENDER EVALUATION PURPOSES

Form A1: Authority to Sign a Bid 51

Form A1.1: Certificate of Authority for Joint Ventures 53

Form A2: Schedule of Work Experience of the Tenderer – Completed Contracts..... 54

Form A3: Proposed Key Personnel 57

Form A4: Schedule of Plant and Equipment 60

Form A5: Schedule of Subcontractors..... 61

Form A6: Financial References 63

Form A7: Schedule of Current Commitments..... 64

Form A8: Estimated Monthly Expenditure 65

Form A9: Details of Alternative Tenders Submitted 66

Form A10: Proposed Deviations and Qualifications by Tenderer 67

Form A11: Certificate of Insurance Cover 68

Form A12: Preliminary Construction Programme (for information purposes only) 69

Form A13: Returnable Document Checklist 70

T2.2.2 OTHER DOCUMENTS REQUIRED FOR TENDER EVALUATION PURPOSES

Form B1: Certificate of Tenderer's Attendance at the Site/Clarification Meeting 71

Form B2: Proof of Registration with Construction Industry Development Board 72

Form B3: Form Concerning Fulfilment of the Construction Regulations, 2014 73

Form B4: Record of Addenda to Tender Documents 75

Form B5: Letter of Intent to provide a Performance Bond..... 76

STELLENBOSCH
STELLENBOSCH • PNIEL • FRANSCHHOEK
MUNISIPALITEIT • UMASIPALA • MUNICIPALITY

T2.2.3 RETURNABLE SCHEDULES THAT WILL BE INCORPORATED IN THE CONTRACT

Form C1: Compulsory Enterprise Questionnaire 77

Form C2: Preference points claim form in terms of the preferential procurement regulations 2022 – purchases/services 80/20 and 90/10 (MBD 6.1) 80

Form C3: Declaration of Interest (MBD 4) 89

Form C4: Declaration of Bidder's Past Supply Chain Management Practices (MBD 8) 92

Form C5: Certificate of Independent Bid Determination (MBD 9) 94

Form C6: Rendering of Services (MBD 7.2) 96

Form C7: Health and Safety Plan 98

Form C8: Certificate for Payment of Municipal Services 99

Form C9: General Conditions of Tender 100

Form C10: Declaration for Procurement above R10 Million (MBD 5) 102

STELLENBOSCH
STELLENBOSCH • PNIEL • FRANSCHHOEK
MUNISIPALITEIT • UMASIPALA • MUNICIPALITY

FORM A1 AUTHORITY TO SIGN A BID

1. SOLE PROPRIETOR (SINGLE OWNER BUSINESS) AND NATURAL PERSON

1.1. I,_____, the undersigned, hereby confirm that I am the sole owner of the business trading as_____.

OR

1.2. I,_____, the undersigned, hereby confirm that I am submitting this tender in my capacity as natural person.

SIGNATURE:		DATE:	
PRINT NAME:			
WITNESS 1:		WITNESS 2:	

2. COMPANIES AND CLOSE CORPORATIONS

2.1. **If a Bidder is a COMPANY**, **a certified copy of the resolution by the board of directors**, duly signed, authorising the person who signs this bid to do so, as well as to sign any contract resulting from this bid and any other documents and correspondence in connection with this bid and/or contract on behalf of the company **must be submitted with this bid,** that is, before the closing time and date of the bid

2.2. In the case of a **CLOSE CORPORATION (CC**) submitting a bid**, a resolution by its members**, authorizing a member or other official of the corporation to sign the documents on their behalf, **shall be included with the bid.**

PARTICULARS OF RESOLUTION BY BOARD OF DIRECTORS OF THE COMPANY/MEMBERS OF THE CC

Date Resolution was taken			
Resolution signed by (name and surname)			
Capacity			
Name and surname of delegated Authorised Signatory			
Capacity			
Specimen Signature			
Full name and surname of ALL Director(s) / Member (s)			
1.		2.	
3.		4.	
5.		6.	
7.		8.	
9.		10.	

Is a CERTIFIED COPY of the resolution attached?	**YES**		**NO**
SIGNED ON BEHALF OF COMPANY / CC:		DATE:	
PRINT NAME:			
WITNESS 1:		WITNESS 2:	

STELLENBOSCH
STELLENBOSCH • PNIEL • FRANSCHHOEK
MUNISIPALITEIT • UMASIPALA • MUNICIPALITY

3. PARTNERSHIP

We, the undersigned partners in the business trading as_____hereby authorize Mr/Ms_____to sign this bid as well as any contract resulting from the bid and any other documents and correspondence in connection with this bid and /or contract for and on behalf of the abovementioned partnership.

The following particulars in respect of every partner must be furnished and signed by every partner:

Full name of partner			Signature
SIGNED ON BEHALF OF PARTNERSHIP:		DATE:	
PRINT NAME:			
WITNESS 1:		WITNESS 2:	

4. CONSORTIUM

We, the undersigned consortium partners, hereby authorize_____ _____(Name of entity) to act as lead consortium partner and further authorize Mr./Ms. _____ _____To sign this offer as well as any contract resulting from this tender and any other documents and correspondence in connection with this tender and / or contract for and on behalf of the consortium.

The following particulars in respect of each consortium member must be provided and signed by each member:

Full Name of Consortium Member	Role of Consortium Member	% Participation	Signature
SIGNED ON BEHALF OF PARTNERSHIP:		DATE:	
PRINT NAME:			
WITNESS 1:		WITNESS 2:	

STELLENBOSCH
STELLENBOSCH • PNIEL • FRANSCHHOEK
MUNISIPALITEIT • UMASIPALA • MUNICIPALITY

FORM A1.1 CERTIFICATE OF AUTHORITY FOR JOINT VENTURES

This returnable schedule is to be completed by JOINT VENTURES

We, the undersigned, are submitting this tender offer in joint venture and hereby authorize Mr./Ms. _____

authorized signatory of the Company/Close Corporation/Partnership (name)_____,
acting in the capacity of lead partner, to sign all documents in connection with the tender offer and any contract resulting from it on our behalf.

(i) Name of firm (Lead partner)			
Address			
		Tel. No.	
Signature		Designation	

(ii) Name of firm			
Address			
		Tel. No.	
Signature		Designation	

(iii)Name of firm			
Address:			
		Tel. No.	
Signature		Designation	

(iv) Name of firm			
Address			
		Tel. No.	
Signature		Designation	

NOTE: A copy of the Joint Venture Agreement showing clearly the percentage contribution of each partner to the Joint Venture, shall be appended to this Schedule.

FORM A2 SCHEDULE OF WORK EXPERIENCE OF THE TENDERER – COMPLETED CONTRACTS

The tenderer shall insert in the spaces provided below a list of similar completed civil engineering contracts awarded to him and those currently being undertaken of similar nature (water pipelines and foul sewer pipelines, related bulk earthworks, civil structures / infrastructure, and road construction) in the past 5 years with a value of R 20 million (incl. VAT) or higher. This information is deemedto be material to the award of the Contract.

COMPLETED CONTRACTS						
EMPLOYER (Name, Tel, Fax, Email)		**Consulting Engineer (Name, Tel, Fax, Email)**		**NATURE OF WORK**	**VALUE OF WORK (INCL. VAT)**	**DATE COMPLETED**
Project		Company				
Name		Name				
Tel		Tel				
Email		Email				
Project		Company				
Name		Name				
Tel		Tel				
Email		Email				
Project		Company				
Name		Name				
Tel		Tel				
Email		Email				
Project		Company				
Name		Name				
Tel		Tel				
Email		Email				
Project		Company				
Name		Name				
Tel		Tel				
Email		Email				
Project		Company				
Name		Name				
Tel		Tel				
Email		Email				
Project		Company				
Name		Name				
Tel		Tel				
Email		Email				

The tenderer shall insert in the spaces provided below a list of similar completed electrical engineering contracts awarded to him and / or his subcontractor those currently being undertaken of similar nature (Street- and Area Lighting, Substations and Protection Systems, and Township reticulations) in the past 5 years with a value of R3 million (incl. VAT) or higher. This information is deemed to be material to the award of the Contract.

COMPLETED CONTRACTS						
EMPLOYER (Name, Tel, Fax, Email)		Consulting Engineer (Name, Tel, Fax, Email)		NATURE OF WORK	VALUE OF WORK (INCL. VAT)	DATE COMPLETED
Project		Company				
Name		Name				
Tel		Tel				
Email		Email				
Project		Company				
Name		Name				
Tel		Tel				
Email		Email				
Project		Company				
Name		Name				
Tel		Tel				
Email		Email				
Project		Company				
Name		Name				
Tel		Tel				
Email		Email				
Project		Company				
Name		Name				
Tel		Tel				
Email		Email				
Project		Company				
Name		Name				
Tel		Tel				
Email		Email				
Project		Company				
Name		Name				
Tel		Tel				
Email		Email				

Attach additional pages if mores space is required.

Number of sheets appended by the tenderer to this schedule (If nil, enter NIL)	

SIGNATURE		NAME (PRINT)	
CAPACITY		DATE	
NAME OF FIRM			

FORM A3 PROPOSED KEY PERSONNEL

Demonstrated experience of the bidder's key personnel to be directly involved with this contract (if awarded) will be evaluated based on the information supplied by the bidder in Form A3 of Part T2.2: Returnable Schedules.

Contract Manager to have a minimum NQF 4 in the Built Environment i.e. National Certificate: Construction Contractor: Project Builder.

Construction Manager to have a minimum NQF 5 in the Built Environment i.e. National Certificate: Management of Civil Engineering Processes or National Diploma: Civil Engineering and Building Diploma.

All listed key personnel to have minimum 5 years **Relevant experience, where they have handled projects with a minimum value of R20 million (incl. VAT) in Civil Engineering / Building projects.

Tenderers shall attach all relevant qualifications of listed proposed key personnel and provide proof of authenticity for said qualifications.

Failure to complete Form A3 and the table below may result in the tender being considered non-responsive.

DESIGNATION	NAME AND NATIONALITY OF: (i) NOMINEE (ii) ALTERNATE	SUMMARY OF QUALIFICATIONS, EXPERIENCE AND PRESENT OCCUPATION
SITE OFFICE Contract Manager Construction Manager		

DESIGNATION	NAME AND NATIONALITY OF: (i) NOMINEE (ii) ALTERNATE	SUMMARY OF QUALIFICATIONS, EXPERIENCE AND PRESENT OCCUPATION
SITE OFFICE Other key staff such as Quality Control Officer (give designation)		

Tenderers shall indicate the total amount of unskilled labour that will be required.

SKILL LEVEL	AMOUNT OF LABOUR THAT WILL BE REQUIRED
Unskilled	

STELLENBOSCH
STELLENBOSCH • PNIEL • FRANSCHHOEK
MUNISIPALITEIT • UMASIPALA • MUNICIPALITY

FORM A4 SCHEDULE OF PLANT AND EQUIPMENT

The following are lists of major items of relevant equipment that I/we **presently** own or lease and will have available for this contract or will acquire or hire for this contract if my / our tender is accepted.

1. DETAILS OF MAJOR EQUIPMENT THAT IS OWNED BY AND IMMEDIATELY AVAILABLE FOR THIS CONTRACT.			
QUANTITY	**DESCRIPTION**	**SIZE**	**CAPACITY**

Attach additional pages if mores space is required.

2. DETAIL OF MAJOR EQUIPMENT THAT WILL BE HIRED, ORE ACQUIRED FOR THIS CONTRACT IF MY / OUR TENDER IS ACCEPTED.			
QUANTITY	**DESCRIPTION,**	**SIZE**	**CAPACITY**

Attach additional pages if mores space is required.

Number of sheets appended by the tenderer to this schedule *(If nil, enter **NIL**)*	

SIGNATURE		NAME (PRINT)	
CAPACITY		DATE	
NAME OF FIRM			

STELLENBOSCH
STELLENBOSCH • PNIEL • FRANSCHHOEK
MUNISIPALITEIT • UMASIPALA • MUNICIPALITY

FORM A5 SCHEDULE OF SUBCONTRACTORS

The following class of construction works will be applicable to the Tender, in accordance with the sum tendered or value determined in accordance with regulation 25(7A) of the Construction Industry Development Regulations, 2004 (as amended) – As at 23 May 2019 - Class of Construction Works. (If intended to subcontract, the electrical part of the tender).

I/we the tenderer, notify the Stellenbosch Municipality that it is our intention to employ the following Subcontractors for work in this contract.

SUBCONTRACTORS				
Category / Type	**Subcontractor Name; Address; Contact Person; Tel. No.**		**Items of work (pay items) to be undertaken by the Subcontractor**	**Estimated cost of Work (Rand)**
1.	Name of firm			
	Contact person			
	Tel No			
	Address			
2.	Name of firm			
	Contact person			
	Tel No			
	Address			
3.	Name of firm			
	Contact person			
	Tel No			
	Address			
4.	Name of firm			
	Contact person			
	Tel No			
	Address			
5.	Name of firm			
	Contact person			
	Tel No			
	Address			
Number of sheets appended by the tenderer to this schedule *(If nil, enter **NIL**)*				

Acceptance of this tender shall not be construed as approval of all or any of the listed subcontractors. Should any of the subcontractors not be approved subsequent to acceptance of the tender, this shall in no way invalidate this tender, and the tendered unit rates for the various items of work shall remain final and binding, even in the event of a subcontractor not listed above being approved by the Employer Agent.

SIGNATURE		NAME (PRINT)	
CAPACITY		DATE	
NAME OF FIRM			

STELLENBOSCH
STELLENBOSCH • PNIEL • FRANSCHHOEK
MUNISIPALITEIT • UMASIPALA • MUNICIPALITY

FORM A6 FINANCIAL REFERENCES

Financial Statements

Notes to tenderer:

1. **The minimum acceptable credit rating applicable to tenderers for this project is a C credit rating. Bank Codes will be requested over a period of 180 days on a pro-rata basis.**
2. **The tenderer's banking details as they appear below shall be completed.**
3. **In the event that the tenderer is a joint venture enterprise, details of all the members of the joint venture shall be similarly provided and attached to this form.**

I/We agree, if required, to furnish an audited copy of the latest set of financial statements together with my/our Directors' and Auditors' report for consideration by the Employer.

Details of Company's Bank

I/We hereby authorise the Employer/Employer's Agent to approach all or any of the following banks for the purposes of obtaining a financial reference:

DESCRIPTION OF BANK DETAIL	BANK DETAILS APPLICABLE TO TENDERER'S HEAD OFFICE
Name of bank	
Branch name	
Branch code	
Street address	
Postal address	
Name of manager	
Telephone number	
Fax number	
Account number	

Tenderer's Tax Details

Tenderer's VAT vendor registration number: .....

Tenderer's SARS tax reference number: .....

STELLENBOSCH
STELLENBOSCH • PNIEL • FRANSCHHOEK
MUNISIPALITEIT • UMASIPALA • MUNICIPALITY

FORM A7 SCHEDULE OF CURRENT COMMITMENTS

Notes to Tenderer:

1. **The Tenderer shall list below all Contracts currently under construction or awarded and about to commence and tenders for which offers have been submitted but awards not yet made.**
2. **In the event of a joint venture enterprise, details of all the members of the joint venture shall similarly be attached to this form.**
3. **The lists must be restricted to not more than 20 Contracts and 20 Tenders. If a tenderer's actual commitments or potential commitments are greater than 20 each, those listed should be in descending order of expected final contract value or sum tendered.**

Table 1 Contracts awarded

Employer	Project	Expected total value of contract (incl. VAT)	Duration (Months)	Expected completion date

Table 2 TENDERS NOT YET AWARDED

Employer	Project	Sum Tendered (incl. VAT)	Tendered Duration (Months)	Expected commencement

STELLENBOSCH
STELLENBOSCH • PNIEL • FRANSCHHOEK
MUNISIPALITEIT • UMASIPALA • MUNICIPALITY

FORM A8 ESTIMATED MONTHLY EXPENDITURE

The Tenderer shall state below the estimated value of work to be completed every month, based on his preliminary programme and his tendered unit rates.

The amount for contingencies must not be included.

MONTH	VALUE
1	R
2	R
3	R
4	R
5	R
6	R
7	R
8	R
9	R
10	R
	COMPLETION OF CONTRACT
SUB TOTAL	R
CONTIGENCIES (10%)	R
SUBTOTAL	R
VAT (15%)	R
TOTAL	R

STELLENBOSCH
STELLENBOSCH • PNIEL • FRANSCHHOEK
MUNISIPALITEIT • UMASIPALA • MUNICIPALITY

FORM A9 DETAILS OF ALTERNATIVE TENDERS SUBMITTED

Not applicable to this Contract.

DESCRIPTION

Attach additional pages if mores space is required.

Number of sheets appended by the tenderer to this schedule (If nil, enter NIL)	

SIGNATURE		NAME (PRINT)	
CAPACITY		DATE	
NAME OF FIRM			

STELLENBOSCH
STELLENBOSCH • PNIEL • FRANSCHHOEK
MUNISIPALITEIT • UMASIPALA • MUNICIPALITY

FORM A10 PROPOSED DEVIATIONS AND QUALIFICATIONS BY TENDERER

The Tenderer should record any **proposed** deviations or qualifications he may wish to make to the Tender Documents in this Returnable Schedule. Alternatively, a tenderer may state such proposed deviations and qualifications in a covering letter attached to his tender and reference such letter in this schedule.

The Tenderer's attention is drawn to clause C.3.8 of the Standard Conditions of Tender referenced in the Tender Data regarding the Employer's handling of material deviations and qualifications.

If no deviations or modifications are desired, the schedule hereunder is to be marked **NIL** and signed by the Tenderer.

PAGE	CLAUSE OR ITEM	DESCRIPTION

Attach additional pages if mores space is required.

Number of sheets appended by the tenderer to this schedule (If nil, enter NIL)	

SIGNATURE		NAME (PRINT)	
CAPACITY		DATE	
NAME OF FIRM			

STELLENBOSCH
STELLENBOSCH • PNIEL • FRANSCHHOEK
MUNISIPALITEIT • UMASIPALA • MUNICIPALITY

FORM A11 CERTIFICATE OF INSURANCE COVER

Note to Tenderer:
In the event of the Tenderer being a joint venture/consortium, the details of the individual members must also be provided.

The Tenderer shall provide the following details of this insurance cover:

(i) Name of Tenderer: .....

(ii) Period of Validity: .....

(i) Value of Insurance:

- Insurance for Works and Contractor's equipment

  Company: .....

  Value: .....

- Insurance for Contractor's personnel

  Company: .....

  Value: .....

- General public liability

  Company: .....

  Value: .....

- SASRIA

  Company: .....

  Value: .....

FORM A12 PRELIMINARY CONSTRUCTION PROGRAMME (FOR INFORMATION PURPOSES ONLY)

The Tenderer shall attach a preliminary programme, as indicated below, to this Form in a Portable Document Format (PDF). This programme shall:

- be in the form of a bar chart (Gantt chart) or similar acceptable time/activity form reflecting the proposed sequence and tempo of execution of the various activities and the quantities that will be carried out every week under each of the elements, comprising the work for this contract;
- also indicate the point where the Tenderer intends to commence work operations and the direction in which the work will proceed;
- be in accordance with the information provided in Form A4: Schedule of Constructional Plant, Form A8: Estimated monthly expenditure, and with all other aspects of the Tender; and
- indicate planned working hours.

Details of the preliminary programme shall be appended to this Form.

Number of sheets, appended by the Tenderer to this Form ..... *[If NIL, enter NIL]*

STELLENBOSCH
STELLENBOSCH • PNIEL • FRANSCHHOEK
MUNISIPALITEIT • UMASIPALA • MUNICIPALITY

FORM A13 RETURNABLE DOCUMENT CHECKLIST

This form has been created as an aid to ensure a tenderer's compliance with the completion of the returnable schedules.

Reference No	Document Description	Tick if completed
Form A1	Authority for signatory	
Form A1.1	Certificate of Authority for Joint Ventures	
Form A2	Schedule of work carried out by Tenderer	
Form A3	Proposed key personnel	
Form A4	Schedule of constructional plant	
Form A5	Schedule of proposed subcontractors	
Form A6	Tenderer's bank details and financial references	
Form A7	Schedule of current commitments	
Form A8	Estimated monthly expenditure	
Form A9	Details of alternative tenders submitted	
Form A10	Proposed deviations and qualifications by Tenderer	
Form A11	Certificate of insurance cover	
Form A12	Preliminary construction programme (for information purposes only)	
Form A13	Returnable document checklist	
Form B1	Certificate of Tenderer's attendance at the Site/Clarification meeting	
Form B2	Proof of registration with Construction Industry Development Board	
Form B3	Form concerning fulfilment of the Construction Regulations, 2014	
Form B4	Record of Addenda of Tender Documents	
Form B5	Letter of Intent to provide a Performance Bond	
Form C1	Compulsory Enterprise Questionnaire	
Form C2	Preference points claim form in terms of the preferential procurement regulations 2022 – purchases/services 80/20 (MBD 6.1)	
Form C3	Declaration of Interest (MBD 4)	
Form C4	Declaration of Bidder's Past Supply Chain Management Practices (MBD 8)	
Form C5	Certificate of Independent Bid Determination (MBD 9)	
Form C6	Rendering of Services (MBD 7.2)	
Form C7	Health and Safety Plan	
Form C8	Certificate for Payment of Municipal Services	
Form C9	General Conditions of Tender	
Form C10	Declaration for Procurement above R10 Million (MBD 5)	
Form C1.1	Form of Offer and Acceptance	
Form C1.2	Contract Data	
Form C1.3	Performance Guarantee	
Form C1.4	Agreement in Terms of the Occupational Health and Safety Act, 1993	
Form C2.2	Bills of Quantities	

STELLENBOSCH
STELLENBOSCH • PNIEL • FRANSCHHOEK
MUNISIPALITEIT • UMASIPALA • MUNICIPALITY

FORM B1 CERTIFICATE OF TENDERER'S ATTENDANCE AT THE CLARIFICATION MEETING

Refer to tender conditions C.2.1 and C.2.7

This is to certify that I/we, (the representative(s)) .....

representing (the tenderer) .....

.....

of (address) .....

.....

.....

telephone number .....

fax number .....

on (date) .....

attended the site meeting, have examined the Site of the Works and its surroundings for which I/we am/are submitting this Tender and have, so far as is practicable, familiarized myself/ourselves with all the information, risks, contingencies and other circumstances which may influence of affect my/our Tender.

Attendance of the above person(s) at the Site Meeting is confirmed by:

EMPLOYER'S AGENT / REPRESENTATIVE: (Name) .....

SIGNED BY EMPLOYER'S AGENT / REPRESENTATIVE: .....

SIGNED ON BEHALF OF TENDERER: .....

Attendees of the Virtual Clarification Meeting may request a certificate of attendance to certify that I/we

.....

have examined the Site of the Works and its surroundings for which I/we am/are submitting this Tender and have, so far as is practicable, familiarized myself/ourselves with all the information, risks, contingencies and other circumstances which may influence of affect my/our Tender. A valid certificate of attendance for the Virtual Clarification Meeting must be attached to the set of bid documents.

NB: Please note that no latecomers will be allowed.

For all compulsory briefing sessions/site meetings/clarification meetings/virtual clarification meetings, bids received from interested bidders that did not attend the meeting or arrived later than predetermined date and time, will be disqualified

STELLENBOSCH
STELLENBOSCH • PNIEL • FRANSCHHOEK
MUNISIPALITEIT • UMASIPALA • MUNICIPALITY

FORM B2 PROOF OF REGISTRATION WITH CONSTRUCTION INDUSTRY DEVELOPMENT BOARD

CIDB Contractor Registration Certificate

Refer to Tender Data clauses C.2.1.2, C.2.23.3 and C.3.13.1:
I/We hereby confirm my/our registration on the Construction Industry Development Board (CIDB) Contractor Database:

COMPANY NAME	CIDB CONTRACTOR GRADING DESIGNATION	CRS REGISTRATION NUMBER AS APPLICABLE

I/We attach a printed copy of the Active Contractor's Listing off the CIDB website www.cidb.org.za as documentary proof of the Contractor's Registration issued by the Construction Industry Development Board (CIDB) to this schedule.

Where a tenderer satisfies CIDB Contractor grading designation requirements through joint venture formation, such tenderers must submit the Certificates of Contractor Registration in respect of each partner.

Failure to affix such documentation as proof of Contractor Enterprise registration as prescribed to this Schedule shall result in this tender not being further considered for the award of the Contract.

Number of sheets, appended by the tenderer to this Schedule ..... (If nil, enter NIL).

SIGNED ON BEHALF OF TENDERER: .....

STELLENBOSCH
STELLENBOSCH • PNIEL • FRANSCHHOEK
MUNISIPALITEIT • UMASIPALA • MUNICIPALITY

FORM B3 FORM CONCERNING FULFILMENT OF THE CONSTRUCTION REGULATIONS, 2014

In terms of Regulation 5(1)(h) of the Construction Regulations, 2014 (hereinafter referred to as the Regulations), promulgated on 7 February 2014 in terms of Section 43 of the Occupational Health and Safety Act, 1993 (Act No 85 of 1993), the Employer shall not appoint a Contractor to perform construction work unless the Contractor can satisfy the Employer that his/her firm has the necessary competencies and resources to carry out the work safely and has allowed adequately in his/her Tender for the due fulfilment of all the applicable requirements of the Act and the Regulations.

1 I confirm that I am fully conversant with the Regulations and that my company has (or will acquire/procure) the necessary competencies and resources to timeously, safely and successfully comply with all of the requirements of the Regulations. (Tick)

YES	
NO	

2 Proposed approach to achieve compliance with the Regulations (Tick)

Own resources, competent in terms of the Regulations (refer to 3 below)	
Own resources, still to be hired and/or trained (until competency is achieved)	
Specialist subcontract resources (competent) - specify:	

3 Provide details of proposed key persons, competent in terms of the Regulations, who will form part of the Contract team as specified in the Regulations (CVs to be attached):

.....

.....

.....

.....

STELLENBOSCH
STELLENBOSCH • PNIEL • FRANSCHHOEK
MUNISIPALITEIT • UMASIPALA • MUNICIPALITY

4 Provide details of proposed training (if any) that will be undergone:

.....

.....

.....

.....

.....

.....

5 Potential key risks identified and measures for addressing risks:

.....

.....

.....

.....

.....

.....

6 I have fully included in my tendered rates and prices (in the appropriate payment items provided in the Schedule of Quantities) for all resources, actions, training and any other costs required for the due fulfilment of the Regulations for the duration of the construction and defects repair period. (Tick)

YES	
NO	

7 The Tenderer shall attach to this Form evidence that he is registered and in good standing with a compensation insurer who is approved by Department of Labour in terms of section 80 of the Compensation for Injury and Disease Act, 1993 (Act No 130 of 1993) (COID).

The Tenderer is required to disclose, by also attaching documentary evidence to this form, all inspections, investigations and their outcomes conducted by the Department of Labour into the conduct of the Tenderer at any time during the 36 months preceding the date of this Tender.

SIGNATURE OF PERSON(S) AUTHORISED TO SIGN THIS TENDER:

1 ID NO: .....

2 ID NO: .....

STELLENBOSCH
STELLENBOSCH • PNIEL • FRANSCHHOEK
MUNISIPALITEIT • UMASIPALA • MUNICIPALITY

FORM B4 RECORD OF ADDENDA TO TENDER DOCUMENTS

We confirm that the following communications issued by the Employer before the submission of this Tender offer, amending the Tender Documents, have been taken into account in this Tender offer:

	Date	Title or details
1		
2		
3		
4		
5		
6		
7		
8		
9		
10		

Attach additional pages if more space is required.

Signed: Date: .....

Name: Position: .....

SIGNED ON BEHALF OF TENDERER: .....

STELLENBOSCH
STELLENBOSCH • PNIEL • FRANSCHHOEK
MUNISIPALITEIT • UMASIPALA • MUNICIPALITY

FORM B5 LETTER OF INTENT TO PROVIDE A PERFORMANCE BOND

It is hereby agreed that a Performance Bond drafted exactly as set out in the attached examples (See Section C1.3: Form of Guarantee) will be provided by the Surety named below:

Name of Surety (Bank or Insurer) _____

Address: _____

_____

_____

Signed: _____

Name: _____

Capacity: _____

On behalf of Tenderer (name of tenderer) _____

Date: _____

CONFIRMED BY Surety's Authorised representative

Signature(s): _____

Name (print): _____

Capacity _____

On behalf of Surety (Bank or Insurer) _____

Date: _____

STELLENBOSCH
STELLENBOSCH • PNIEL • FRANSCHHOEK
MUNISIPALITEIT • UMASIPALA • MUNICIPALITY

FORM C1 COMPULSORY ENTERPRISE QUESTIONNAIRE

The following particulars must be furnished. In the case of a joint venture, separate enterprise questionnaires in respect of each partner must be completed and submitted.

Section 1: Name of enterprise: .....

Section 2: VAT registration number, if any: .....

Section 3: CIDB registration number, if any: .....

Section 4: Particulars of sole proprietors and partners in partnerships

Name*	Identity number*	Personal income tax number*

*Complete only if sole proprietor or partnership and attach separate page if more than 3 partners.

Section 5: Particulars of companies and close corporations

Company registration number: .....

Close corporation number: .....

Tax reference number: .....

Section 6: Record in the service of the state

Indicate by marking the relevant boxes with a cross, if any sole proprietor, partner in a partnership or director, manager, principal shareholder or stakeholder in a company or close corporation is currently, or has been within the last 12 months, in the service of any of the following:

☐ a member of any municipal council ☐ a member of any provincial legislature ☐ a member of the National Assembly or the National Council of Province ☐ a member of the board of directors of any municipal entity ☐ an official of any municipality or municipal entity	☐ an employee of any provincial department, national or provincial public entity or constitutional institution within the meaning of the Public Finance Management Act, 1999 (Act No 1 of 1999) ☐ a member of an accounting authority of any national or provincial public entity ☐ an employee of Parliament or a provincial legislature

If any of the above boxes are marked, disclose the following:

*

Name of sole proprietor, partner, director, manager, principal shareholder or stakeholder	Name of institution, public office, board or organ of state and position held	Status of service (tick appropriate column)	
		Current	Within last 12 months

*Insert separate page if necessary.

Section 7: Record of spouses, children and parents in the service of the state

Indicate by marking the relevant boxes with a cross, if any spouse, child or parent or a sole proprietor, partner in a partnership or director, manager, principal shareholder or stakeholder in a company or close corporation is currently, or has been within the last 12 months, in the service of any of the following:

□	a member of any municipal council	□	an employee of any provincial department, national or provincial public entity or constitutional institution within the meaning of the Public Finance Management Act, 1999 (Act No 1 of 1999)
□	a member of any provincial legislature	□	a member of an accounting authority of any national or provincial public entity
□	a member of the National Assembly or the National Council of Province	□	an employee of Parliament or a provincial legislature
□	a member of the board of directors of any municipal entity		
□	an official of any municipality or municipal entity		

*

Name of spouse, child or parent	Name of institution, public office, board or organ of state and position held	Status of service (tick appropriate column)	
		Current	Within last 12 months

*Insert separate page if necessary.

STELLENBOSCH
STELLENBOSCH • PNIEL • FRANSCHHOEK
MUNISIPALITEIT • UMASIPALA • MUNICIPALITY

The undersigned, who warrants that he/she is duly authorised to do so on behalf of the enterprise:

(i) authorises the Employer to obtain a tax clearance certificate from the South African Revenue Services that my/our tax matters are in order;

(ii) confirms that neither the name of the enterprise or the name of any partner, manager, director or other person, who wholly or partly exercises, or may exercise, control over the enterprise appears on the Register of Tender Defaulters established in terms of the Prevention and Combating of Corrupt Activities Act, 2004;

(iii) confirms that no partner, member, director or other person, who wholly or partly exercises, or may exercise, control over the enterprise, has within the last five years been convicted of fraud or corruption;

(iv) confirms that I/we are not associated, linked or involved with any other tendering entities submitting tender offers and have no other relationship with any of the Tenderers or those responsible for compiling the Scope of Work that could cause or be interpreted as a conflict of interest; and

(v) confirms that the contents of this questionnaire are within my personal knowledge and are to the best of my belief both true and correct.

Signed: Date: .....

Name: Position: .....

Enterprise name: .....

STELLENBOSCH
STELLENBOSCH • PNIEL • FRANSCHHOEK
MUNISIPALITEIT • UMASIPALA • MUNICIPALITY

FORM C2 – MBD6.1 PREFERENCE POINTS CLAIM FORM IN TERMS OF THE PREFERENTIAL PROCUREMENT REGULATIONS 2022 – PURCHASES /SERVICES 80/20 AND 90/10

NB:
Before completing this form, bidders must study the general conditions, definitions and directives applicable in respect of B-BBEE, as prescribed in the Preferential Procurement Regulations, 16 January 2023 and the Stellenbosch Preferential Procurement Policy 2026/2027

This preference form must form part of all bids invited. It contains general information and serves as a claim form for preference points for Broad-Based Black Economic Empowerment (B-BBEE) Status Level of Contribution and any other applicable preference.

1. GENERAL CONDITIONS

1.1 The following preference point systems are applicable to all bids:

- the 80/20 system for requirements with a Rand value of up to R50 000 000 (all applicable taxes included); and
- the 90/10 system for requirements with a Rand value above R50 000 000 (all applicable taxes included).

1.2

a) The value of this bid is estimated to not exceed R50 000 000 (all applicable taxes included) and therefore the 80/20 preference point system shall be applicable; or

b) The value of this bid is estimated to exceed R50 000 000 (all applicable taxes included) and therefore the 90/10 preference point system shall be applicable; or

1.3 Points for this bid shall be awarded for:

(a) Price;

(b) B-BBEE Status Level of Contributor. and

(c) Locality of supplier

1.4 The maximum points for this bid are allocated as follows:

	POINTS	POINTS
PRICE	80	90
B-BBEE STATUS LEVEL OF CONTRIBUTOR	10	5
LOCALITY (See definitions)	10	5
Total points for Price and BBBEE (must not exceed 100)	**100**	**100**

1.5 Failure on the part of a bidder to submit proof of B-BBEE Status level of contributor together with the bid, will be interpreted to mean that preference points for B-BBEE status level of contribution are not claimed.

1.6 Failure on the part of a bidder to submit proof of Locality together with the bid, will be interpreted to mean that preference points for Locality are not claimed.

1.7 The purchaser reserves the right to require of a bidder, either before a bid is adjudicated or at any time subsequently, to substantiate any claim in regard to preferences, in any manner required by the purchaser.

2. DEFINITIONS

(a) **"B-BBEE"** means broad-based black economic empowerment as defined in section 1 of the Broad-Based Black Economic Empowerment Act;

(b) "**B-BBEE status level of contributor"** means the B-BBEE status of an entity in terms of a code of good practice on black economic empowerment, issued in terms of section 9(1) of the Broad-Based Black Economic Empowerment Act;

(c) **"bid"** means a written offer in a prescribed or stipulated form in response to an invitation by an organ of state for the provision of goods or services, through price quotations, advertised competitive bidding processes or proposals;

(d) **"Broad-Based Black Economic Empowerment Act"** means the Broad-Based Black Economic Empowerment Act, 2003 (Act No. 53 of 2003);

(e) **"EME"** means an Exempted Micro Enterprise in terms of a code of good practice on black economic empowerment issued in terms of section 9 (1) of the Broad-Based Black Economic Empowerment Act;

(f) **"functionality"** means the ability of a tenderer to provide goods or services in accordance with specifications as set out in the tender documents.

(g) "Locality" means the local suppliers and/or service providers that business offices are within the Municipal area of Stellenbosch (WC024).

(h) **"price"** includes all applicable taxes less all unconditional discounts;

(i) **"proof of B-BBEE status level of contributor"** means:

1) B-BBEE Status level certificate issued by an authorized body or person;
2) A sworn affidavit as prescribed by the B-BBEE Codes of Good Practice;
3) Any other requirement prescribed in terms of the B-BBEE Act;

(j) **"QSE"** means a qualifying small business enterprise in terms of a code of good practice on black economic empowerment issued in terms of section 9 (1) of the Broad-Based Black Economic Empowerment Act;

(k) "**Specific goals**" means specific goals as contemplated in section 2(1)(d) of the Act which may include contracting with persons, or categories of persons, historically disadvantaged by unfair discrimination on the basis of race, gender and disability including the implementation of programmes of the Reconstruction and Development Programme as published in Government Gazette No. 16085 dated 23 November 1994;

(l) **"rand value"** means the total estimated value of a contract in Rand, calculated at the time of bid invitation, and includes all applicable taxes;

3. FORMULAE FOR PROCUREMENT OF GOODS AND SERVICES

4. POINTS AWARDED FOR PRICE

4.1 THE 80/20 OR 90/10 PREFERENCE POINT SYSTEMS

A maximum of 80 or 90 points is allocated for price on the following basis:

80/20 **or** **90/10**

$$Ps = 80\left(1 - \frac{Pt - P\,min}{P\,min}\right) \text{ or } \quad Ps = 90\left(1 - \frac{Pt - P\,min}{P\,min}\right)$$

Where

Ps = Points scored for price of bid under consideration
Pt = Price of bid under consideration
Pmin = Price of lowest acceptable bid

4.2 FORMULAE FOR DISPOSAL OR LEASING OF STATE ASSETS AND INCOME-GENERATING PROCUREMENT

4.3 POINTS AWARDED FOR PRICE

A maximum of 80 or 90 points is allocated for price on the following basis:

80/20 **or** **90/10**

$$Ps = 80\left(1 + \frac{Pt - P\,max}{P\,max}\right) \text{ or } \quad Ps = 90\left(1 + \frac{Pt - P\,max}{Pmax}\right)$$

Where

Ps = Points scored for price of bid under consideration
Pt = Price of bid under consideration
Pmax = Price of highest acceptable bid

5. POINTS AWARDED FOR B-BBEE STATUS LEVEL OF CONTRIBUTOR

5.1 In terms of Regulation 4 (2) and 5 (2) of the Preferential Procurement Regulations, preference points must be awarded to a bidder for attaining a specific goal specified for the tender.

5.2 The tendering conditions will stipulate the specific goals, as contemplated in section 2(1)(d)(ii) of the Preferential Procurement Act, be attained.

5.3 A maximum of 20 points (80/20 preference points system) or 10 (90/10) preference points system), must be allocated for specific goals. These goals are :

(a) contracting with persons, or categories of persons, historically disadvantaged by unfair discrimination on the basis of race, gender or disability;

(b) Promotion of enterprises located in the municipal area (WCO24)

5.4 Regarding par 5.3 (a) at least 50% of the 20/10 points must be allocated to promote this goal and points will be allocated in terms of the BBBEE scorecard as follows.

B-BBEE Status Level of Contributor	Number of Points for 80/20 Preference Points System	Number of Points for 90/10 Preference Points System
1	20	10
2	18	9
3	16	8
4	12	5
5	8	4
6	6	3

7	4	2
8	2	1
Non-compliant contributor	0	0

5.5 A tenderer must submit proof of its BBBEE status level contributor.

5.6 A tenderer failing to submit proof of BBBEE status level of contributor –

5.6.1 5.6.1 may only score in terms of the 80/90-point formula for price; and

5.6.2 5.6.2 scores 0 points out of 10/5 BBBEE status level of contributor, which is in line with section 2 (1) (d) (i) of the Act, where the supplier or service provider did not provide proof thereof.

5.7 Regarding par 5.3 (b) a maximum of 50% of the 20/10 points must be allocated to promote this goal. Maximum points will be allocated as follows.

Locality of supplier	**Number of Points for 80/20 Preference Points System**	**Number of Points for 90/10 Preference Points System**
Within the boundaries of the municipality	10	5
Outside of the boundaries of the municipality	0	0

6. BID DECLARATION

6.1 Bidders who claim points in respect of B-BBEE Status Level of Contribution and Locality must complete the following:

7. B-BBEE STATUS LEVEL OF CONTRIBUTOR CLAIMED IN TERMS OF PARAGRAPHS 1.4 AND 4.1

7.1 B-BBEE Status Level of Contributor: . = …… (maximum of 10 points)
(Points claimed in respect of paragraph 7.1 must be substantiated by relevant proof of B-BBEE status level of contributor.)

7.2 Within the boundaries of Stellenbosch Municipality (WC024)?

YES		NO	

Business Address - ……
……
……

(Points claimed in respect of paragraph 7.2 must be substantiated by relevant proof that the business premises is situated in the Municipal area of Stellenbosch (WC024). A valid municipal account or proof of valid lease agreement, or sworn affidavit must be attached)

8. SUB-CONTRACTING

8.1 Will any portion of the contract be sub-contracted?
(***Tick applicable box***)

YES		NO	

STELLENBOSCH
STELLENBOSCH • PNIEL • FRANSCHHOEK
MUNISIPALITEIT • UMASIPALA • MUNICIPALITY

8.1.1 If yes, indicate:

i) What percentage of the contract will be subcontracted ..... %
ii) The name of the sub-contractor……...
iii) The B-BBEE status level of the sub-contractor.....……...
iv) Whether the sub-contractor is an EME or QSE

(Tick applicable box)

YES		NO	

v) Specify, by ticking the appropriate box, if subcontracting with an enterprise

Designated Group: An EME or QSE which is at last 51% owned by:	**EME** √	**QSE** √
Black people		
Black people who are youth		
Black people who are women		
Black people with disabilities		
Black people living in rural or underdeveloped areas or townships		
Cooperative owned by black people		
Black people who are military veterans		
OR		
Any EME		
Any QSE		

9. DECLARATION WITH REGARD TO COMPANY/FIRM

9.1 Name of company/firm……

9.2 VAT registration number……

9.3 Company registration number……

9.4 TYPE OF COMPANY/ FIRM

- ☐ Partnership/Joint Venture / Consortium
- ☐ One-person business/sole propriety
- ☐ Close corporation
- ☐ Company
- ☐ (Pty) Limited

[TICK APPLICABLE BOX]

9.5 DESCRIBE PRINCIPAL BUSINESS ACTIVITIES

……
……
……

9.6 COMPANY CLASSIFICATION

- ☐ Manufacturer
- ☐ Supplier
- ☐ Professional service provider
- ☐ Other service providers, e.g. transporter, etc.

[*TICK APPLICABLE BOX*]

STELLENBOSCH
STELLENBOSCH • PNIEL • FRANSCHHOEK
MUNISIPALITEIT • UMASIPALA • MUNICIPALITY

9.7 MUNICIPAL INFORMATION

Municipality where business is situated: ……
Registered Account Number: ……
Stand Number……

9.8 Total number of years the company/firm has been in business:……

9.9 I/we, the undersigned, who is / are duly authorised to do so on behalf of the company/firm, certify that the points claimed, based on the B-BBE status level of contributor indicated in paragraphs 1.4 and 6.1 of the foregoing certificate, qualifies the company/ firm for the preference(s) shown and I / we acknowledge that:

i) The information furnished is true and correct;
ii) The preference points claimed are in accordance with the General Conditions as indicated in paragraph 1 of this form;
iii) In the event of a contract being awarded as a result of points claimed as shown in paragraphs 1.4 and 6.1, the contractor may be required to furnish documentary proof to the satisfaction of the purchaser that the claims are correct;
iv) If the B-BBEE status level of contributor points has been claimed or obtained on a fraudulent basis or any of the conditions of contract have not been fulfilled, the purchaser may, in addition to any other remedy it may have –
   (a) disqualify the person from the bidding process;
   (b) recover costs, losses or damages it has incurred or suffered as a result of that person's conduct;
   (c) cancel the contract and claim any damages which it has suffered as a result of having to make less favourable arrangements due to such cancellation;
   (d) recommend that the bidder or contractor, its shareholders and directors, or only the shareholders and directors who acted on a fraudulent basis, be restricted by the National Treasury from obtaining business from any organ of state for a period not exceeding 10 years, after the *audi alteram partem* (hear the other side) rule has been applied; and
   (e) forward the matter for criminal prosecution.

SIGNATURE OF BIDDER(S):			
WITNESS 1:		WITNESS 2:	
DATE:			
ADDRESS:			

STELLENBOSCH
STELLENBOSCH • PNIEL • FRANSCHHOEK
MUNISIPALITEIT • UMASIPALA • MUNICIPALITY

PLEASE COMPLETE IN FULL YOUR OWN AFFIDAVIT TO CLAIM POINTS

SWORN AFFIDAVIT – B-BBEE EXEMPTED MICRO ENTERPRISE – GENERAL (DRAFT EXAMPLE)
(DO NOT USE. USE NEW/APPLICABLE TEMPLATE)

I, the undersigned,

Full name & Surname	
Identity number	

Hereby declare under oath as follows:

1. The contents of this statement are to the best of my knowledge a true reflection of the facts.
2. I am a Member / Director / Owner (**Select one**) of the following enterprise and am duly authorised to act on its behalf:

NB!

Enterprise Name:	
Trading Name (If Applicable):	
Registration Number:	
Vat Number (If applicable)	
Enterprise Physical Address:	
Type of Entity (CC, (Pty) Ltd, Sole Prop etc.):	
Nature of Business:	
Definition of "Black People"	As per the Broad-Based Black Economic Empowerment Act 53 of 2003 as Amended by Act No 46 of 2013 "Black People" is a generic term which means Africans, Coloureds and Indians – (a) who are citizens of the Republic of South Africa by birth or descent; or (b) who became citizens of the Republic of South Africa by naturalisation- i. before 27 April 1994; or ii. on or after 27 April 1994 and who would have been entitled to acquire citizenship by naturalization prior to that date;"

EXAMPLE – DO NOT USE

STELLENBOSCH
STELLENBOSCH • PNIEL • FRANSCHHOEK
MUNISIPALITEIT • UMASIPALA • MUNICIPALITY

Definition of "Black Designated Groups"	"Black Designated Groups means: (a) unemployed black people not attending and not required by law to attend an educational institution and not awaiting admission to an educational institution; (b) Black people who are youth as defined in the National Youth Commission Act of 1996; (c) Black people who are persons with disabilities as defined in the Code of Good Practice on employment of people with disabilities issued under the Employment Equity Act; (d) Black people living in rural and under developed areas; (e) Black military veterans who qualifies to be called a military veteran in terms of the Military Veterans Act 18 of 2011;"

3. I hereby declare under Oath that:

EXAMPLE - DO NOT USE

- The Enterprise is_____% Black Owned using the flow-through principle as per Amended Code Series 100 of the Amended Codes of Good Practice issued under section 9
(1) of B-BBEE Act No 53 of 2003 as Amended by Act No 46 of 2013,
- The Enterprise is_____% Black Female Owned as per Amended Code Series 100of the Amended Codes of Good Practice issued under section 9 (1) of B-BBEE Act No 53 of 2003 as Amended by Act No 46 of 2013,
- The Enterprise is_____% Black Designated Group Owned as per Amended Code Series 100 of the Amended Codes of Good Practice issued under section 9 (1) of B-BBEE Act No 53 of 2003 as Amended by Act No 46 of 2013,
- Black Designated Group Owned % Breakdown as per the definition stated above:
    - Black Youth % =_____%
    - Black Disabled % =_____%
    - Black Unemployed % =_____%
    - Black People living in Rural areas % =_____%
    - Black Military Veterans % =_____%

EXAMPLE - DO NOT USE

- Based on the Audited Financial Statements/Financial Statements and other information available on the latest financial year-end of_____(DD/MM/YYYY), the annual TotalRevenue was R10,000,000.00 (Ten Million Rands) or less NB!
- Please Confirm on the below table the B-BBEE Level Contributor, **by ticking the applicable box.**

100% Black Owned	**Level One** (135% B-BBEE procurement recognition level)	
At least 51% Black Owned	**Level Two** (125% B-BBEE procurement recognition level)	
Less than 51% Black Owned	**Level Four** (100% B-BBEE procurement recognition level)	

4. I know and understand the contents of this affidavit and I have no objection to take the prescribed oath and consider the oath binding on my conscience and on the Owners of the Enterprise which I represent in this matter.

STELLENBOSCH
STELLENBOSCH • PNIEL • FRANSCHHOEK
MUNISIPALITEIT • UMASIPALA • MUNICIPALITY

5. The sworn affidavit will be valid for a period of 12 months from the date signed by commissioner.

Deponent Signature:_____

Date :_____

NB! ORIGINALLY CERTIFIED/ NOT COPY

_____

Commissioner of Oaths
Signature & stamp
Date:

EXAMPLE OF POINT SCORING AND ALLOCATION OF PREFERENCE POINTS (80/20) WHERE LOCALITY AS A GOAL IS INCLUDED. STELLENBOSCH PREFERENTIAL PROCUREMENT POLICY.

BIDDER	PRICE	BBBEE LEVEL (VALID)	BUSINESS PREMISES (IN WC024)
TENDERER A	R 80 000	1	NO
TENDERER B	R 75 000	1	YES
TENDERER C	R 70 000	2	NO

BIDDER	PRICE POINTS (Out of 80)	BBBEE POINTS (Out of 10)	LOCALITY POINTS (Out of 10)	TOTAL POINTS (Out of 100)
TENDERER A	68.57	10	0	78.57
TENDERER B	74.29	10	10	94.29
TENDERER C	80	9	0	89

STELLENBOSCH
STELLENBOSCH • PNIEL • FRANSCHHOEK
MUNISIPALITEIT • UMASIPALA • MUNICIPALITY

FORM C3 DECLARATION OF INTEREST (MBD 4)

1. No bid will be accepted from persons in the service of the state[1].
2. Any person, having a kinship with persons in the service of the state, including a blood relationship, may make an offer or offers in terms of this invitation to bid. In view of possible allegations of favouritism, should the resulting bid, or part thereof, be awarded to persons connected with or related to persons in service of the state, it is required that the bidder or their authorised representative declare their position in relation to the evaluating/adjudicating authority and/or take an oath declaring his/her interest.
3. In order to give effect to the above, the following questionnaire must be completed and submitted with the bid:

3.1.	**Full Name of bidder or his or her representative**	
3.2.	**Identity Number**	
3.3.	**Position occupied in the Company (director, shareholder [2] etc.)**	
3.4.	**Company Registration Number**	
3.5.	**Tax Reference Number**	
3.6.	**VAT Registration Number**	

3.7.	**Are you presently in the service of the state?**	**YES**		**NO**	
3.7.1.	If so, furnish particulars:				

1 MSCM Regulations: "in the service of the state" means to be –

a. a member of –
i. any municipal council;
ii. any provincial legislature; or
iii. the National Assembly or the National Council of Provinces;
b. a member of the board of directors of any municipal entity;
c. an official of any municipality or municipal entity;
d. an employee of any national or provincial department, national or provincial public entity or constitutional institution within the meaning of the Public Finance Management Act, 1999 (Act No.1 of 1999);
e. an executive member of the accounting authority of any national or provincial public entity; or
f. an employee of Parliament or a provincial legislature.

2 "Shareholder" means a person who owns shares in the company and is actively involved in the management of the company or business and exercises control over the company.

STELLENBOSCH
STELLENBOSCH • PNIEL • FRANSCHHOEK
MUNISIPALITEIT • UMASIPALA • MUNICIPALITY

3.8.	**Have you been in the service of the state for the past twelve months?**	**YES**		**NO**	
3.8.1.	If so, furnish particulars:				
3.9.	**Do you have any relationship (family, friend, other) with persons in the service of the state and who may be involved with the evaluation and or adjudication of this bid?**	**YES**		**NO**	
3.9.1.	If so, furnish particulars:				
3.10.	**Are you aware of any relationship (family, friend, other) between a bidder and any persons in the service of the state who may be involved with the evaluation and or adjudication of this bid?**	**YES**		**NO**	
3.10.1.	If so, furnish particulars:				
3.11.	**Are any of the company's directors, managers, principal shareholders or stakeholders in the service of the state?**	**YES**		**NO**	
3.11.1.	If so, furnish particulars:				
3.12.	**Is any spouse, child or parent of the company's directors, managers, principal shareholders or stakeholders in the service of the state?**	**YES**		**NO**	
3.12.1.	If so, furnish particulars:				
3.13.	**Do you or any of the directors, trustees, managers, principal shareholders, or stakeholders of this company have any interest in any other related companies or business whether or not they are bidding for this contract?**	**YES**		**NO**	
3.13.1.	If so, furnish particulars:				

STELLENBOSCH
STELLENBOSCH • PNIEL • FRANSCHHOEK
MUNISIPALITEIT • UMASIPALA • MUNICIPALITY

3.14.	Please provide the following information on ALL directors/shareholders/trustees/members below:			
Full Name and Surname		**Identity Number**	**Personal Income Tax Number**	**Provide State[3] Employee Number**

NB:

a) PLEASE ATTACH CERTIFIED COPY(IES) OF ID DOCUMENT(S)

b) PLEASE PROVIDE PERSONAL INCOME TAX NUMBERS FOR ALL DIRECTORS / SHAREHOLDERS / TRUSTEES / MEMBERS, ETC.

4. DECLARATION

I, the undersigned (name)_____,
certify that the information furnished in paragraph 3 above is correct.

3 MSCM Regulations: "in the service of the state" means to be –

a. a member of –
  i. any municipal council;
  ii. any provincial legislature; or
  iii. the National Assembly or the National Council of Provinces;
b. a member of the board of directors of any municipal entity;
c. an official of any municipality or municipal entity;
d. an employee of any national or provincial department, national or provincial public entity or constitutional institution within the meaning of the Public Finance Management Act, 1999 (Act No.1 of 1999);
e. an executive member of the accounting authority of any national or provincial public entity; or
f. an employee of Parliament or a provincial legislature.

I accept that the state may act against me should this declaration prove to be false.

SIGNATURE		DATE	
NAME OF SIGNATORY			
POSITION			
NAME OF COMPANY			

STELLENBOSCH
STELLENBOSCH • PNIEL • FRANSCHHOEK
MUNISIPALITEIT • UMASIPALA • MUNICIPALITY

FORM C4: DECLARATION OF BIDDER'S PAST SUPPLY CHAIN MANAGEMENT PRACTICES (MBD 8)

1. This Municipal Bidding Document must form part of all bids invited.
2. It serves as a declaration to be used by municipalities and municipal entities in ensuring that when goods and services are being procured, all reasonable steps are taken to combat the abuse of the supply chain management system.
3. The bid of any bidder may be rejected if that bidder, or any of its directors have:
   (i) abused the municipality's / municipal entity's supply chain management system or committed any improper conduct in relation to such system;
   (ii) been convicted for fraud or corruption during the past five years;
   (iii) willfully neglected, reneged on or failed to comply with any government, municipal or other public sector contract during the past five years; or
   (iv) been listed in the Register for Tender Defaulters in terms of section 29 of the Prevention and Combating of Corrupt Activities Act (No 12 of 2004).
4. In order to give effect to the above, the following questionnaire must be completed and submitted with the bid.

4.1	Is the bidder or any of its directors listed on the National Treasury's database as a company or person prohibited from doing business with the public sector? *(Companies or persons who are listed on this database were informed in writing of this restriction by the National Treasury after the audi alteram partem rule was applied).*	**Yes**	**No**
4.1.1	If so, furnish particulars:		
4.2	Is the bidder or any of its directors listed on the Register for Tender Defaulters in terms of section 29 of the Prevention and Combating of Corrupt Activities Act (No 12 of 2004)? *(To access this Register enter the National Treasury's website, www.treasury.gov.za, click on the icon "Register for Tender Defaulters" or submit your written request for a hard copy of the Register to facsimile number (012) 3265445).*	**Yes**	**No**
4.2.1	If so, furnish particulars:		
4.3	Was the bidder or any of its directors convicted by a court of law (including a court of law outside the Republic of South Africa) for fraud or corruption during the past five years?	**Yes**	**No**

STELLENBOSCH
STELLENBOSCH • PNIEL • FRANSCHHOEK
MUNISIPALITEIT • UMASIPALA • MUNICIPALITY

4.3.1	If so, furnish particulars:		
4.4	Does the bidder or any of its directors owe any municipal rates and taxes or municipal charges to the municipality / municipal entity, or to any other municipality / municipal entity, that is in arrears for more than three months?	**Yes**	**No**
4.4.1	If so, furnish particulars:		
4.5	Was any contract between the bidder and the municipality / municipal entity or any other organ of state terminated during the past five years on account of failure to perform on or comply with the contract?	**Yes**	**No**
4.5.1	If so, furnish particulars:		

5. CERTIFICATION

I, the undersigned (full name),_____, certify that the information furnished on this declaration form true and correct.

I accept that, in addition to cancellation of a contract, action may be taken against me should this declaration prove to be false.

SIGNATURE:		NAME (PRINT):	
CAPACITY:		DATE:	
NAME OF FIRM:			

STELLENBOSCH
STELLENBOSCH • PNIEL • FRANSCHHOEK
MUNISIPALITEIT • UMASIPALA • MUNICIPALITY

FORM C5: CERTIFICATE OF INDEPENDENT BID DETERMINATION (MBD 9)

1. This Municipal Bidding Document (MBD) must form part of all bids invited.

2. Section 4 (1) (b) (iii) of the Competition Act No. 89 of 1998, as amended, prohibits an agreement between, or concerted practice by, firms, or a decision by an association of firms, if it is between parties in a horizontal relationship and if it involves collusive bidding (or bid rigging).[4] Collusive bidding is a *per se* prohibition meaning that it cannot be justified under any grounds.

3. Municipal Supply Regulation 38 (1) prescribes that a supply chain management policy must provide measures for the combating of abuse of the supply chain management system, and must enable the accounting officer, among others, to:

   3.1. take all reasonable steps to prevent such abuse;

   3.2. reject the bid of any bidder if that bidder or any of its directors has abused the supply chain management system of the municipality or municipal entity or has committed any improper conduct in relation to such system; and

   3.3. cancel a contract awarded to a person if the person committed any corrupt or fraudulent act during the bidding process or the execution of the contract.

4. This MBD serves as a certificate of declaration that would be used by institutions to ensure that, when bids are considered, reasonable steps are taken to prevent any form of bid-rigging.

5. In order to give effect to the above, the attached Certificate of Bid Determination (MBD 9) must be completed and submitted with the bid:

CERTIFICATE OF INDEPENDENT BID DETERMINATION:

In response to the invitation for the bid made by:

STELLENBOSCH MUNICIPALITY

I, the undersigned, in submitting the accompanying bid, hereby make the following statements that I certify to be true and complete in every respect:

1. I have read and I understand the contents of this Certificate;
2. I understand that the accompanying bid will be disqualified if this Certificate is found not tobe true and complete in every respect;
3. I am authorized by the bidder to sign this Certificate, and to submit the accompanying bid,on behalf of the bidder;
4. Each person whose signature appears on the accompanying bid has been authorized bythe bidder to determine the terms of, and to sign, the bid, on behalf of the bidder;
5. For the purposes of this Certificate and the accompanying bid, I understand that the word "competitor" shall include any individual or organization, other than the bidder, whether or not

4 Bid rigging (or collusive bidding) occurs when businesses, that would otherwise be expected to compete, secretly conspire to raise prices or lower the quality of goods and / or services for purchasers who wish to acquire goods and / or services through a bidding process. Bid rigging is, therefore, an agreement between competitors not to compete.

affiliated with the bidder, who:

5.1. has been requested to submit a bid in response to this bid invitation;

5.2. could potentially submit a bid in response to this bid invitation, based on their qualifications, abilities or experience; and

5.3. provides the same goods and services as the bidder and/or is in the same line of business as the bidder

6. The bidder has arrived at the accompanying bid independently from, and without consultation, communication, agreement or arrangement with any competitor. However, communication between partners in a joint venture or consortium[5] will not be construed as collusive bidding.

7. In particular, without limiting the generality of paragraphs 6 above, there has been no consultation, communication, agreement or arrangement with any competitor regarding:

7.1. prices;

7.2. geographical area where product or service will be rendered (market allocation)

7.3. methods, factors or formulas used to calculate prices;

7.4. the intention or decision to submit or not to submit, a bid;

7.5. the submission of a bid which does not meet the specifications and conditions of the bid; or

7.6. bidding with the intention not to win the bid.

8. In addition, there have been no consultations, communications, agreements or arrangements with any competitor regarding the quality, quantity, specifications and conditions or delivery particulars of the products or services to which this bid invitation relates.

9. The terms of the accompanying bid have not been, and will not be, disclosed by the bidder, directly or indirectly, to any competitor, prior to the date and time of the official bid opening or of the awarding of the contract.

10. I am aware that, in addition and without prejudice to any other remedy provided to combat any restrictive practices related to bids and contracts, bids that are suspicious will be reported to the Competition Commission for investigation and possible imposition of administrative penalties in terms of section 59 of the Competition Act No. 89 of 1998 and or may be reported to the National Prosecuting Authority (NPA) for criminal investigation and or may be restricted from conducting business with the public sector for a period not exceeding ten (10) years in terms of the Prevention and Combating of Corrupt Activities Act No. 12 of 2004 or any other applicable legislation.

SIGNATURE		NAME (PRINT)	
CAPACITY		DATE	
NAME OF FIRM			

5 Joint venture or Consortium means an association of persons for the purpose of combining their expertise, property, capital, efforts, skill and knowledge in an activity for the execution of a contract.

STELLENBOSCH
STELLENBOSCH • PNIEL • FRANSCHHOEK
MUNISIPALITEIT • UMASIPALA • MUNICIPALITY

FORM C6: RENDERING OF SERVICES (MBD 7.2)

NOTE:

1. **This form must be completed in duplicate by both the successful bidder (Part 1) and the purchaser (Part 2). Both forms must be signed in the original so that the successful bidder and the purchaser will be in possession of originally signed contracts for their respective records.**
2. **NO correction fluid/tape may be used.**
3. **In the event of a mistake having been made, it shall be crossed out in ink and be accompanied by an initial at each and every alteration.**

PART 1 (to be completed by the TENDERER)

I hereby undertake to render services described in the attached bidding documents to **Stellenbosch Municipality**, in accordance with the requirements and task directives / proposals specifications stipulated in Tender Number **B/SM 21/27: MAIN ROAD INTERSECTION IMPROVEMENTS: STRAND /ADAM TAS / ALEXANDER**

1. at the price(s) quoted below / as per pricing schedule. My offer(s) remain(s) binding upon me andopen for acceptance by the Purchaser during the validity period indicated and calculated from the closing date of the bid.
2. The following documents shall be deemed to form and be read and construed as part of this agreement:

   Bidding documents, *viz*
   (a) Invitation to bid
   (b) Tax clearance certificate
   (c) Pricing schedule(s)
   (d) Filled in task directive/proposal
   (e) Preference claims in terms of the Preferential Procurement Regulations 2022
   (f) Declaration of interest
   (g) Special Conditions of Contract; and
   (h) General Conditions of Contract.
3. I confirm that I have satisfied myself as to the correctness and validity of my bid; that the price(s) and rate(s) quoted cover all the services specified in the bidding documents; that the price(s) and rate(s) cover all my obligations and I accept that any mistakes regarding price(s) and rate(s) and calculations will be at my own risk.
4. I accept full responsibility for the proper execution and fulfilment of all obligations and conditions devolving on me under this agreement as the principal liable for the due fulfilment of this contract.
5. I declare that I have no participation in any collusive practices with any bidder or any other person regarding this or any other bid.
6. I confirm that I am duly authorised to sign this contract.

SIGNATURE		NAME (PRINT)	
CAPACITY		DATE	
NAME OF FIRM			
WITNESS 1:		WITNESS 2:	
DATE:			

STELLENBOSCH
STELLENBOSCH • PNIEL • FRANSCHHOEK
MUNISIPALITEIT • UMASIPALA • MUNICIPALITY

CONTRACT FORM - RENDERING OF SERVICES

PART 2 (to be completed by STELLENBOSCH MUNICIPALITY)

1. I,_____,

   in my capacity as_____,

   accept your bid under reference number_____dated_____,
   for the rendering of services indicated hereunder and/or further specified in the annexure(s).

2. An official order indicating service delivery instructions is forthcoming.

3. I undertake to make payment for the services rendered in accordance with the terms and conditions of the contract, within 30 (thirty) days after receipt of an invoice.

4. I confirm that I am duly authorised to sign this contract.

SIGNED AT_____on this_____day of_____20____.

TO BE COMPLETED BY THE STELLENBOSCH MUNICIPALITY		
SIGNATURE:		**OFFICIAL STAMP:**
NAME (PRINT):		
WITNESS 1:		
WITNESS 2:		

STELLENBOSCH
STELLENBOSCH • PNIEL • FRANSCHHOEK
MUNISIPALITEIT • UMASIPALA • MUNICIPALITY

FORM C7: HEALTH AND SAFETY PLAN

Tenderers are to note the requirements of the Occupational Health and Safety Act No. 85 of 1993 and the Construction Regulations 2014 of the Act. The tenderer shall be deemed to have read and fully understood the requirements of the above Act and Regulations and to have allowed for all costs in compliance therewith.

In this regard the tenderer shall prepare and attach a Health and Safety Plan in respect of the Works in order to demonstrate the necessary competencies and resources to perform the construction work all in accordance with the Act and Regulations. Such Health and Safety Plan shall cover inter-alia the following details:

(1) Management Structure, Site Supervision and Responsible Persons including a succession plan.
(2) Contractor's induction training programme for employees, sub-contractors and visitors to the Site.
(3) Health and safety precautions and procedures to be adhered to in order to ensure compliance with the Act, Regulations and Safety Specifications.
(4) Regular monitoring procedures to be performed.
(5) Regular liaison, consultation and review meetings with all parties.
(6) Site security, welfare facilities and first aid.
(7) Site rules and fire and emergency procedures.

Tenderers are to note that the Contractor is required to ensure that all sub-contractors or others engaged in the performance of the contract also comply with the above requirements.

The tenderer shall also take into account the additional requirements stated in the Project Specifications when drawing up the Health and Safety Plan for the contract.

Details of the Health and Safety Plan shall be appended to this Form.

Number of sheets, appended by the tenderer to this Form. .....(If nil, enter NIL).

SIGNED ON BEHALF OF TENDERER:.....

STELLENBOSCH
STELLENBOSCH • PNIEL • FRANSCHHOEK
MUNISIPALITEIT • UMASIPALA • MUNICIPALITY

FORM C8: CERTIFICATE FOR PAYMENT OF MUNICIPAL SERVICES

DECLARATION IN TERMS OF CLAUSE 112(1) OF THE MUNICIPAL FINANCE MANAGEMENT ACT (NO.56 OF 2003)

I,_____,_____(full name and ID no.), hereby acknowledge that according to SCM Regulation 38(1)(d)(i), the Municipality may reject the tender of the tenderer if any municipal rates and taxes or municipal service charges owed by the Tenderer or any of its directors/members/partners to the Stellenbosch Municipality, or to any other municipality or municipal entity, are in arrears for more than 3 (three) months.
I declare that I am duly authorised to act on behalf of_____(name of the firm) and hereby declare, that to the best of my personal knowledge, neither the firm nor any director/member/partner of said firm is in arrears on any of its municipal accounts with any municipality in the Republic of South Africa, for a period longer than 3 (three) months.
I further hereby certify that the information set out in this schedule and/or attachment(s) hereto is true and correct. The Tenderer acknowledges that failure to properly and truthfully complete this schedule may result in the tender being disqualified, and/or in the event that the tenderer is successful, the cancellation of the contract.

PHYSICAL BUSINESS ADDRESS(ES) OF THE TENDERER	MUNICIPAL ACCOUNT NUMBER

FURTHER DETAILS OF THE BIDDER'S Director / Shareholder / Partners, etc.:

Director / Shareholder / partner	Physical address of the Business	Municipal Account number(s)	Physical residential address of the Director / shareholder / partner	Municipal Account number(s)

NB: Please attach certified copy (ies) of ID document(s) and Municipal Accounts

If the entity or any of its Directors/Shareholders/Partners, etc. rents/leases premises, a copy of the rental/lease agreement must be submitted with this tender.

Signature	**Position**	**Date**

STELLENBOSCH
STELLENBOSCH • PNIEL • FRANSCHHOEK
MUNISIPALITEIT • UMASIPALA • MUNICIPALITY

FORM C9: GENERAL CONDITIONS OF TENDER

9. Sealed tenders, with the **"Tender Number and Title"** clearly endorsed on the envelope, must be deposited in the **tender box** at the offices of the Stellenbosch Municipality, Plein Street, Stellenbosch.

10. The tender must be lodged by the Tenderer in the tender box in the Main Hall Entrance, Stellenbosch Municipal Offices, Plein Street, Stellenbosch

PLEASE NOTE:

10.1. Tenders that are deposited in the incorrect box will not be considered.

10.2. Mailed, telegraphic or faxed tenders will not be accepted.

10.3. Documents may only be completed in non-erasable ink.

10.4. The use of correction fluid/tape is not allowed.

10.4.1. In the event of a mistake having been made, it shall be crossed out in ink and be accompanied by an initial at each and every alteration.

10.4.2. Alterations or deletions not signed by the Tenderer may render the tender invalid.

10.5. All bids must be submitted in writing on the official forms supplied (not to be re-typed)

10.6. All prices shall be quoted in South African currency and be **INCLUSIVE of VAT.**

11. Where the value of an intended contract will exceed R1 000 000, 00 (R1 million) it is the bidder's responsibility to be registered with the South African Revenue Service (SARS) for VAT purposes in order to be able to issue tax invoices. The municipality will deem the price above R 1 000 000,00 (R1 million) to be VAT inclusive even if it is indicated that no VAT is charged. Please insure that provision is made for VAT in these instances.

3.1 It is a requirement of this contract that the amount of value-added tax (VAT) must be shown clearly on each invoice.

3.2 The amended Value-Added Tax Act requires that a Tax Invoice for supplies in excess of R3 000 should, in addition to the other required information, also disclose the VAT registration number of the recipient, with effect from 1 March 2005. The VAT registration number of the Stellenbosch Municipality is **4700102181.**

3 Any Tender received after the appointed time for the closing of Tenders shall not be considered but shall be filed unopened with the other Tenders received or may be returned to the Tenderer at his request.

4 Tenders may not be telefaxed to the Municipality and therefore any tenders received by fax will **not** be considered.

5 Tenders shall be opened in public at the Stellenbosch Municipal Offices as soon as possible after the closing time for the receipt of tenders.

6 The Municipality shall have the right to summarily disqualify any Tenderer who, either at the date of submission of this tender or at the date of its award, is indebted to the Municipality in respect of any rental, levies, rates and/or service charges; ALTERNATIVELY;

6.1 That an agreement be signed whereby the Tenderer agrees that a percentage or fixed amount at the discretion of the Municipality, be deducted from payments due to him for this tender, until the debt is paid in full.

6.2 The tenderer shall declare **all** the Municipal account numbers in the Stellenbosch Area for which the enterprise or the proprietors or directors in their personal capacity is/ are responsible or co-responsible.

7 This bid will be evaluated and adjudicated according to the following criteria:

7.1 Relevant specifications
7.2 Value for money
7.3 Capability to execute the contract
7.4 PPPFA & associated regulations

8 Service Level Agreement

The award of the tender is subject to the signing of a Service Level Agreement (SLA) between the successful bidder and Stellenbosch Municipality.

9 Centralised Supplier Database

No Bids will be awarded to a bidder who is not registered on the Centralised Supplier Database (CSD).

The CSD supplier number starting with (MAAA) number is automatically generated by the Central Database System after successful registration and validation of a prospective service provider. This number is now a mandatory requirement, as referred to in regulation 14(1) *(b)* of the Municipal Supply Chain Management Regulations, as part of the listing criteria for accrediting a prospective service provider. Prospective suppliers should self – register on the CSD website at www.csd.gov.za Registration on the CSD will be compulsory in order to conduct business with the STELLENBOSCH MUNICIPALITY. Registration on CSD can be done by contacting 021 808 8594 or Nicolene.Hamilton@stellenbosch.gov.za

Centralised Supplier Database No. MAAA……

STELLENBOSCH
STELLENBOSCH • PNIEL • FRANSCHHOEK
MUNISIPALITEIT • UMASIPALA • MUNICIPALITY

FORM C10: DECLARATION FOR PROCUREMENT ABOVE R10 MILLION (MBD 5)

For all procurement expected to exceed R10 million (VAT included), bidders must complete the following questionnaire:

1. Are you by law required to prepare annual financial statements for auditing?	**YES**		**NO**	
1.1. If yes, submit audited annual financial statements for the past three years or since the date of establishment if established during the past three years.				
2. Do you have any outstanding undisputed commitments for municipal services towards a municipality or any other service provider in respect of which payment is overdue for more than 30 days?	**YES**		**NO**	
2.1. If no, this serves to certify that the bidder has no undisputed commitments for municipal services towards a municipality or other service provider in respect of which payment is overdue for more than 30 days. 2.2. If yes, provide particulars.				
3. Has any contract been awarded to you by an organ of state during the past five years, including particulars of any material non-compliance or dispute concerning the execution of such contract?	**YES**		**NO**	
3.1. If yes, furnish particulars				
4. Will any portion of goods or services be sourced from outside the Republic, and, if so, what portion and whether any portion of payment from the municipality / municipal entity is expected to be transferred out of the Republic?	**YES**		**NO**	
4.1 If yes, furnish particulars				

CERTIFICATION

I, the undersigned (name)_____, certify that the information furnished on this declaration form is correct.

I accept that the state may act against me should this declaration prove to be false.

SIGNATURE		DATE	
NAME (PRINT)			
CAPACITY			
NAME OF FIRM			

STELLENBOSCH
STELLENBOSCH • PNIEL • FRANSCHHOEK
MUNISIPALITEIT • UMASIPALA • MUNICIPALITY

THE CONTRACT

PART C1 AGREEMENT AND CONTRACT DATA.....104 – 141
PART C2 PRICING DATA ..... 142 – 262
PART C3 SCOPE OF WORKS ..... 263 – 494
PART C4 SITE INFORMATION.....495

STELLENBOSCH
STELLENBOSCH • PNIEL • FRANSCHHOEK
MUNISIPALITEIT • UMASIPALA • MUNICIPALITY

PART C1 AGREEMENT AND CONTRACT DATA

C1.1 FORM OF OFFER AND ACCEPTANCE 105

C1.2 CONTRACT DATA 110

C1.3 PERFORMANCE GUARANTEE 132

C1.4 AGREEMENT IN TERMS OF THE OCCUPATIONAL HEALTH AND SAFETY ACT, 1993 (ACT NO 85 OF 1993) 135

C1.5 CONTRACT OF TEMPORARY EMPLOYMENT OF COMMUNITY LIAISON OFFICER 139

STELLENBOSCH
STELLENBOSCH • PNIEL • FRANSCHHOEK
MUNISIPALITEIT • UMASIPALA • MUNICIPALITY

C1.1 FORM OF OFFER AND ACCEPTANCE (AGREEMENT)

OFFER

The Employer, identified in the Acceptance signature block, has solicited offers to enter into a Contract in respect of the following works:

Contract No. TENDER B/SM 21/27: MAIN ROAD INTERSECTION IMPROVEMENTS STRAND / ADAM TAS RD / ALEXANDER

The Tenderer, identified in the Offer signature block below, has examined the documents listed in the Tender Data and addenda thereto as listed in the Tender Schedules, and by submitting this Offer has accepted the Conditions of Tender.

By the representative of the Tenderer, deemed to be duly authorised, signing this part of this Form of Offer and Acceptance, the Tenderer offers to perform all of the obligations and liabilities of the Contractor under the Contract including compliance with all its terms and conditions according to their true intent and meaning for an amount to be determined in accordance with the Conditions of Contract identified in the Contract Data.

THE OFFERED TOTAL OF THE PRICES INCLUSIVE OF VALUE-ADDED TAX IS

……..

…… rand *[in words]*;

R ..... *[in figures],*

This Offer may be accepted by the Employer by signing the Acceptance part of this Form of Offer and Acceptance and returning one copy of this document to the Tenderer before the end of the period of validity stated in the Tender Data, whereupon the Tenderer becomes the party named as the Contractor in the Conditions of Contract identified in the Contract Data.

Signature(s) _____

Name(s) _____

Capacity _____

[Name and address of organisation]

_____

Name and signature of witness _____ Date _____

ACCEPTANCE

By signing this part of this Form of Offer and Acceptance, the Employer identified below accepts the Tenderer's Offer. In consideration thereof, the Employer shall pay the Contractor the amount due in accordance with the Conditions of Contract identified in the Contract Data. Acceptance of the Tenderer's Offer shall form an agreement between the Employer and the Tenderer upon the terms and conditions contained in this Agreement and in the Contract that is the subject of this Agreement.

The terms of the Contract are contained in

Part C1	Agreements and Contract Data *[which includes this Agreement]*
Part C2	Pricing Data
Part C3	Scope of Work
Part C4	Site Information

and drawings and documents or parts thereof, which may be incorporated by reference into Parts C1 to C4 above.

Deviations from and amendments to the documents listed in the Tender Data and any Addenda thereto listed in the Tender Schedules, as well as any changes to the terms of the Offer agreed by the Tenderer and the Employer during this process of offer and acceptance, are contained in the Schedule of Deviations attached to and forming part of this Agreement. No amendments to or deviations from the said documents are valid unless contained in this Schedule, which must be duly signed by the authorised representative(s) of both parties.

The Tenderer shall within the time required to submit documentation in accordance with clause 5.3.2 of the Contract Data (C1.2) after receiving a completed copy of this Agreement, including the Schedule of Deviations (if any), contact the Employer's agent (whose details are given in the Contract Data) to arrange the delivery of any bonds, guarantees, proof of insurance and any other documentation to be provided in terms of the Conditions of Contract identified in the Contract Data at, or just after, the date this Agreement comes into effect. Failure to fulfil any of these obligations in accordance with those terms shall constitute a repudiation of this Agreement.

Notwithstanding anything contained herein, this Agreement comes into effect on the date when the Tenderer receives one fully completed original copy of this document, including the Schedule of Deviations (if any). Unless the Tenderer (now Contractor) within five working days of the date of such receipt notifies the Employer in writing of any reason why he cannot accept the contents of this Agreement, this Agreement shall constitute a binding Contract between the parties.

Signature(s) _____

Name(s) _____

Capacity _____

[Name and address of organisation]

_____

Name and signature of witness _____ Date _____

STELLENBOSCH
STELLENBOSCH • PNIEL • FRANSCHHOEK
MUNISIPALITEIT • UMASIPALA • MUNICIPALITY

SCHEDULE OF DEVIATIONS

Notes:

1. The extent of deviations from the Tender Documents issued by the Employer prior to the Tender closing date is limited to those permitted in terms of the Conditions of Tender;
2. A Tenderer's covering letter shall not be included in the final Contract Document. Should any matter in such letter, which constitutes a deviation as aforesaid, become the subject of agreements reached during the process of offer and acceptance, the outcome of such agreement shall be recorded here;
3. Any other matter arising from the process of offer and acceptance either as a confirmation, clarification or change to the Tender Documents and which is agreed by the Parties becomes an obligation of the Contract and shall also be recorded here;
4. Any change or addition to the Tender Documents arising from the above agreements and recorded here, shall also be incorporated into the final draft of the Contract.

1 Subject .....

Details

2 Subject .....

Details

3 Subject .....

Details

4 Subject .....

Details

5 Subject .....

Details

6 Subject .....

Details

By the duly authorised representatives signing this Schedule of Deviations, the Employer and the Tenderer agree to and accept the foregoing Schedule of Deviations as the only deviations from and amendments to the documents listed in the Tender Data and Addenda thereto as listed in the Tender Schedules, as well as any confirmation, clarification or change to the terms of the offer agreed by the Tenderer and the Employer during this process of offer and acceptance.

It is expressly agreed that no other matter whether in writing, oral communication or implied during the period between the issue of the Tender Documents and the receipt by the Tenderer of a completed signed copy of this Agreement shall have any meaning or effect in the Contract between the parties arising from this Agreement.

STELLENBOSCH
STELLENBOSCH • PNIEL • FRANSCHHOEK
MUNISIPALITEIT • UMASIPALA • MUNICIPALITY

FOR THE TENDERER:

Signature(s) _____

Name(s) _____

Capacity _____

[Name and address of organisation]

_____

_____

_____

Name and signature of witness _____ Date _____

FOR THE EMPLOYER:

Signature(s) _____

Name(s) _____

Capacity _____

[Name and address of organisation]

_____

_____

_____

Name and signature of witness _____ Date _____

CONFIRMATION OF RECEIPT

The Tenderer (now Contractor), identified in the Offer part of this Agreement, hereby confirms receipt from the Employer, identified in the Acceptance part of this Agreement, of one fully completed original copy of this Agreement, including the Schedule of Deviations (if any) today:

the.....(day)

of..... (month)

20..... (year)

at.....(place)

For the Contractor:

.....
Signature

.....
Name

.....
Capacity

Signature and name of witness:

.....
Signature

.....
Name

STELLENBOSCH
STELLENBOSCH • PNIEL • FRANSCHHOEK
MUNISIPALITEIT • UMASIPALA • MUNICIPALITY

C1.2 CONTRACT DATA

PART 1: DATA PROVIDED BY THE EMPLOYER

CONDITIONS OF CONTRACT

The *General Conditions of Contract for Construction Works,* Third Edition, 2015, published by the South African Institution of Civil Engineering, is applicable to this Contract and is obtainable from www.saice.org.za.

Copies of these Conditions of Contract may be obtained from the South African Institution of Civil Engineering, tel 011 805 5947.

PART 1: DATA PROVIDED BY THE EMPLOYER

The General Conditions of Contract for Construction Works make several references to the Contract Data for specific data, which together with these conditions collectively describe the risks, liabilities and obligations of the contracting parties and the procedures for the administration of the Contract. The Contract Data shall have precedence in the interpretation of any ambiguity or inconsistency between it and the general conditions of contract.

The Contract Data and General Conditions of Contract shall have precedence over the Drawings, Scope of Work and Standardised Specifications in the interpretation of any ambiguity or inconsistency.

The following amendments and additions to the Clauses are the contract specific data applicable to this Contract:

Clause	Description / Wording
1.1.1.13	The Defects Liability Period is 12 (twelve) months, measured from the date of Certificate of Completion.
1.1.1.14	The time for achieving Practical Completion is **54 (fifty-four) weeks** inclusive of the 14 day period referred to in Clause 5.3.2 below if applicable, and inclusive of non-working days referred to in Clause 5.8.1 below, but exclusive of special non-working days (Clause 5.8.1). The Employer requires a phased handover/commissioning for respective portions as follows: 1. Priority One (1) - complete Adam Tas Road (Western Cape Provincial Main Road – R310) and Strand Road (Western Cape Main Road - R44) intersection including the junction with Alexander Street within 40 (Forty) weeks. This includes roadworks (layerworks and surfacing), traffic signals, infrastructure services (new and re-location), road works, road signage, road marking 2. Priority Two (2) – As a parallel process start construction of the new Electrical sub-station works at the same time as the road works and complete this by the overall stipulated timeframe. This includes the new electrical sub-station construction and bulk underground electrical MV and HV cable rerouting.

	Please Note: An alternative tender with an alternative time for achieving practical completion may be offered in terms of Clause C.2.12 on page 16 of this document. Only the lowest tender's alternative offer will be considered.
1.1.1.15	The Employer is: STELLENBOSCH MUNICIPALITY. represented by such person or persons duly authorised thereto by Stellenbosch Municipality in writing and the legal successors in title to this person.
1.1.1.16	The Employer's Agent is BVi Consulting Engineers Western Cape (Pty) Ltd (hereinafter referred to as BVi Consulting) represented by the Employee duly authorised thereto in writing.
1.1.1.28	*Delete the contents of **Sub-Clause 1.1.1.28** and replace with the following:* "Scope of Work means the document(s) containing the Standard Specifications, the Project Particular Specifications and the Drawings, that specify and describe the Works which are to be provided, and any other requirements and constraints relatingto the manner in which the work is to be carried out."
New 1.1.1.35	"Drawings means all drawings, calculations and technical information forming part of the Tender Documents (other than information contained in the Specifications) and any modifications thereof or additions thereto from time to time approved in writing bythe Engineer or delivered to the Contractor by the Engineer."

STELLENBOSCH
STELLENBOSCH • PNIEL • FRANSCHHOEK
MUNISIPALITEIT • UMASIPALA • MUNICIPALITY

Clause	Description / Wording
New 1.1.1.36	"Parties" means the Contractor and the Employer.
New 1.1.1.37	"approved programme" means the latest programme submitted by the Contractor and ap
1.2.1.	*Delete the contents of **Sub-Clause 1.2** and replace with the following:* Any written communication between the parties shall have been duly delivered or notices issued if:
1.2.1.1	Handed to the addressee or to his duly authorise agent; or
1.2.1.2	The Employer's address for receipt of communications is: Physical address: — Postal address: 71 Plein Street — P.O. Box 17 Stellenbosch — Stellenbosch 7600 — 7599 Telephone: — 021 808 8223 Email: — Nigell.Winter@stellenbosch.gov.za
1.2.1.2	The Employer's Agent address for receipt of communications and notices is: Physical address: — Postal address: Block B2, Edison Square, — PO Box 86 C/o Edison Way & Century Avenue, — CENTURY CITY CENTURY CITY 7441 — 7446 Telephone: — 021 527 7000 Email: — franciscusg@bviwc.co.za
New 1.2.1.3	Any notice or claim required in accordance with this Contract shall be communicated separately from other communications, on a separate cover with specific reference to the clause in terms of which the communication was made. Provided that the Employer, Employer's Agent and Contractor shall be entitled, by written notice to each other, to change their said addresses**.**
1.3.5	*Add the following to the end of **Sub-Clause 1.3.5**:* "No part of any document or drawings issued with this enquiry may be copied, photographed or repeated in any manner or by any process without the written consent of the Engineer. Copyright is reserved on all designs, specifications, patents and patentable designs, systems and Processes contained in the documents and drawings.

Clause	Description / Wording
	The person, firm, or body to whom these documents are issued or made available shall be held jointly and severally responsible in their personal and corporate capacities for any contravention of the requirements of Sub-Clause 1.3.5. The recipients of these documents shall treat the documents as well as the details contained herein as private and confidential."
3.1.1	*Delete the contents of **Sub-Clause 1.2** and replace with the following:* "The natural person appointed by the Employer to administer the Contract shall be a registered professional in a built environment profession that is appropriate to the Scope of Work."
3.2.1	*Delete the contents of **Sub-Clause 3.2.1** and replace with the following:* "The function of the Employer's Agent is to administer the Contract in accordance with the provisions of the Contract."
3.2.3	*Add the following to the end of **Clause 3.1.3**:* "The Employer's Agent shall obtain the specific approval of the Employer before carrying out any of his functions or duties according to the following Clauses of the General Conditions of Contract: 1. Clause 3.2.1: Nomination of Employer Agent's Representative 2. Clause 3.2.4: Employer Agent's Authority to Delegate 3. Clause 5.8.1: Non-working Times 4. Clause 5.12.4: Acceleration 5. Clause 6.3: Variations 6. Clause 5.11.1: Suspension of the Works 7. Clause 5.12: Extension of Time for Practical Completion.
4.1.2	In Clause 4.1.2, line 5, amend "any drawing" to read "any design, drawing".
4.2.3	*Add new **Sub-Clause 4.2.3**:* Should the Contractor fail to proceed with due diligence with any Employer's Agent's instruction, the Employer's Agent may notify the Contractor to proceed within 7 days from receipt of such notice. Without further notice, on default by the Contractor, the Employer may employ other parties or use its own resources to give effect to such instruction in addition to any other rights that the Employer may have inter alia in terms of Clause 9.2.1.3.6. The Employer may recover such costs from the Contractor resulting from same.
4.3.1	**Add the following** to the clause: For conventional construction works the Basic Conditions of Employment Act of 1997 (Act No 75 of 1997) shall apply and the minimum employment conditions which will apply shall be guided by the latest Sectorial Determination: Civil Engineering Sector published from time to time. Compliance with the National Environmental Management Act (**NEMA**), **Act** 107 of 1998. Basic Conditions of Employment Act of 1997 (Act No 75 of 1997) as per Government Notice R63 of 25 January 2002, shall apply to works described in the Scope of Work as being labour intensive and which are undertaken by unskilled or semi-skilled workers." "The Contractor shall comply with the Occupational Health and Safety Specification

Clause	Description / Wording
	prepared by the Employer in terms of the Construction Regulations, 2014 promulgated in terms of Section 43 of the Occupational Health and Safety Act (Act No. 85 of 1993). Without limiting the Contractor's obligations in terms of the Contract, the Contractor shall before commencement of the Works or any part thereof, be in the possession of an approved Health and Safety Plan."
4.3.3	**Add the following at the end of Clause 4.3:** "4.3.2" With regard to the Compensation for Occupational Injuries and Diseases Act (Act No. 130 of 1993), the Contractor shall, within such time as is stated in the Appendix to Part 1 of the Contract Data for the production of insurance policies in terms of Clause 8.6.6, deliver to the Employer a letter, either (a) from his Insurance Company certifying that the Contractor has affected insurance with the Company for the full extent of his potential liability in respect of all workmen employed by him on the Contract and undertaking to notify the Employer of the expiry date of the policy at least one calendar month before such date, or (b) from the Compensation Commissioner certifying that the Contractor has complied with the requirements of the above-mentioned Act and is at present in good standing with the Compensation Fund." 4.3.4 The Employer and the Contractor hereby agree, in terms of the provisions of Section 37(2) of the Occupational Health and Safety Amendment Act, 1993 (Act 85 of 1993), hereinafter referred to as 'the Act', that the following arrangements and procedures shall apply between them to ensure compliance by the Contractor with the provisions of the Act: (i) The Contractor undertakes to acquaint the appropriate officials and employees of the Contractor with all relevant provisions of the Act and the Regulations promulgated in terms of the Act. (ii) The Contractor undertakes that all relevant duties, obligations and prohibitions imposed in terms of the Act and Regulations on the Contractor will be fully complied with. The Contractor accepts sole liability for such due compliance with the relevant duties, obligations and prohibitions imposed by the Act and Regulations and expressly absolves the Employer from himself being obliged to comply with any of the aforesaid duties, obligations and prohibitions, with the exception of such duties, obligations and prohibitions expressly assigned to the Employer in terms of the Act and its associated Regulations. (iii) The Contractor agrees that any duly authorised officials of the Employer shall be entitled, although not obliged, to take such steps as may be necessary to monitor that the Contractor has conformed to his undertakings as described in paragraphs (i) and (ii) above, which steps may include, but will not be limited to, the right to inspect any appropriate site or premises occupied by the Contractor, or any appropriate records or safety plans held by the Contractor. (iv) The Contractor shall be obliged to report forthwith to the Employer and Employer's Agent any investigation, complaint or criminal charge which may arise as a consequence of the provisions of the Act and Regulations, pursuant to work performed in terms of this Contract, and shall, on written demand, provide full details in writing, to the Employer and Employer's Agent, of such investigation, complaint or criminal charge. 4.3.5 The Contractor shall furthermore, in compliance with Constructional Regulations 2014 to the Act:

Clause	Description / Wording
	(i) Acquaint himself with the requirements of the Employer's health and safety specification as laid down in regulation 4(1)(a) of the Construction Regulation 2014 and prepare a suitably and sufficiently documented health and safety plan as contemplated in regulation 5(1) of the Construction Regulation 2003 for approval by the Employer or his assigned agent. The Contractor's health and safety plan and risk assessment shall be submitted to the Employer for approval within fourteen (14) days after **the Commencement Date for each assignment** and shall be implemented and maintained from the Commencement of the Works. (ii) The Employer, or his assigned agent, reserves the right to conduct periodic audits, as contemplated in the Construction Regulations 2014, to ensure that the Contractor is compliant in respect of his obligations. Failure by the Contractor to comply with the requirements of these Regulations shall entitle the Employer's Agent, at the request of the Employer or his agent, to suspend all or any part of the Works, with no recourse whatsoever by the Contractor for any damages incurred as a result of such suspension, until such time that the Employer or his agents are satisfied that the issues in which the Contractor hasbeen in default have been rectified." (iii) The Employer, or his assigned agent, reserves the right to conduct periodic audits, as contemplated in the Construction Regulations 2014, to ensure that the Contractor is compliant in respect of his obligations. Failure by the Contractor to comply with the requirements of these Regulations shall entitle the Employer's Agent, at the request of the Employer or his agent, to suspend all or any part of the Works, with no recourse whatsoever by the Contractor for any damages incurred as a result of such suspension, until such time that the Employer or his agents are satisfied that the issues in which the Contractor hasbeen in default have been rectified."
4.4.1	The Contractor shall not sub-contract more than 50% of the contract price
4.4.4	*Add the following to **4.4.4*** The contractual relationship between the Contractor and any subcontractors selected by the Contractor in consultation with the Employer shall be governed by "General Conditions of Subcontract for Construction Works (First Edition) 2018
4.4.5	*Delete the contents of **Sub-Clause 4.4.5** and replace with the following:* "Any consent granted in accordance with Clause 4.4 or appointment of a sub-contractor in accordance with Clause 4.4.3 shall not imply a contract between the Employer and the subcontractor, or a responsibility or liability on the part of the Employer to the subcontractor and shall not relieve the Contractor from any liability or obligation under the Contract and he shall be liable for the acts, defaults and neglects of any subcontractor, his agents or employees as fully as if they were the acts, defaults or neglects of the Contractor, his agents or employees. The Employer's consent in respect of any particular subcontractor may be withdrawn at any time should reasonable grounds be given therefore in writing to the Contractor by the Employer, in which event the Contractor shall forthwith terminate the engagement of that subcontractor on the Works. The withdrawal by the Employer of his consent in respect of any particular sub-contractor that is engaged in the execution of any portion of the works, including any portions of the Works which are sub-let by the Contractor in accordance with Clause 4.4.3 shall not relieve the Contractor of any of his obligations under the Contract, nor of any of his obligations to sub-let the particular portions of the Works concerned."

Clause	Description / Wording
4.5.4	*Delete the contents of **Sub-Clause 4.5.4** and replace with the following:* "For this contract the fees, taxes, levies and other charges to be paid by the Contractor in terms of Sub-Clause 4.5.1.1 will not be refunded by the Employer. The cost thereof shall be deemed to be included in the prices tendered for relevant items in the Bill of Quantities."
4.12.2	*Add the following to the end of **Sub-Clause 4.12.2**:* The Contractor's Construction Manager and Main Construction Supervisor shall be on site at all times when work is being performed. No work may be performed without these persons being on site.
5.2.1	Commencement Date of the Contract shall be the date the Employer signs the Form of Acceptance and notifies the Tenderer and the Tenderer confirms receipt of the notice of Acceptance.
5.3.1	The documentation required before commencement with Works execution are: 1. Health and Safety Plan (Refer to Clause 4.3) 2. Initial programme (Refer to Clause 5.6) 3. Security (Refer to Clause 6.2) 4. Insurance (Refer to Clause 8.6) 5. Occupational Health and Safety Agreement (C1.4 of the Contract Document) 6. Letter of good standing from the Compensation Commissioner (if not insured with a licensed Compensation Insurer) 7. Permits and wayleaves (C3.4.2.4)
5.3.3	*Add the following to the end of **Sub-Clause 5.3.3**:* **"**However, deemed commencement of the Works shall not be construed as approval of the documentation submitted. "The Contractor shall not commence working until the Department of Labour has issued the Construction Work Permit in terms of the Occupational Health and Safety Act 1993: Construction Regulations 2014
5.3.4:	*Add the following Clause after Clause 5.3.3:* *5.3.4 Application for Construction Work Permit* *Where the intended construction work* *exceeds 365 days and will involve more than 3600-person days of construction work; or* *the tender value limit exceeds 7,8 or 9 of the Construction Industry Development Board (CIDB) grading,* *the Employer shall, in compliance with Regulation 3 of the Construction Regulations, read together with the exemptions published in Government Notice dated 7 July 2015 and 26 July 2018, apply to the Provincial Director of the Department of Labour for a construction work permit to perform the intended construction work. The employer will apply for the construction work permit as soon as possible after its Bid Adjudication Committee has awarded the contract, and the period that*

	the Department of labour requires to issue the permit will run concurrently with the appeal period. *Should the issuing of a construction work permit delay the Employer's Agent's instruction to commence executing the Works by more than 30 calendar days after the application has been submitted, and this in turn causes a delay to Practical Completion, then the Contractor shall be entitled to make a claim in accordance with Clause 10.1. Should, however, the issuing of a construction work permit be delayed by the submission of an unacceptable draft Health and Safety Plan, in the opinion of either the Employer's Health and Safety Agent, or the Provincial Director of the Department of Labour, no claim for an extension of time will be entertained.*
5.4.1	Between the wording "… Site," and "the location …." In the third line, add the following: "subject to the Contractor having an approved project specific health and safety plan in terms of the Occupational Health and Safety Act 1993: Construction Regulations 2014 and complied with the initial requirements thereof,"
5.4.2	The access and possession of Site shall not be exclusive to the Contractor but as set out in the Scope of Works.
New 5.4.4	*Add the following new **Sub-Clause 5.4.4**:*

Clause	Description / Wording
	"The Contractor shall bear all costs and charges for special and temporary rights of way required by him in connection with access to the Site. The Contractor shall also provide at his/her own cost any additional facilities outside the Site required by him/her for the purposes of the Works."
5.5.1	The stipulated maximum time limit for Practical Completion is **54 (fifty-four) weeks** measured from the commencement date**.** The period to achieving Practical Completion starts from Commencement Date of the Contract (5.2.1) and is inclusive of: a) 14 days to comply with Clause 5.3.1 b) 7 days to allow Contractor to lodge Notification of Construction Work in terms of Construction Regulation 2014, provided the Health and Safety Plan of the Contractor was in order and approved by the Employer Agent (namely Construction Health and Safety Agent)
5.6.1	The Contractor shall deliver his Works programme within **fourteen (14) days** after the Commencement Date for each individual order.
5.8.1	Delete the words "between sunset and sunrise" in the first line and replace with "outside normal working hours". "Normal non-working days shall be Saturdays and Sundays. The Contractor will be allowed to work on Saturdays if he so chooses, but Saturdays will not be taken into account when calculating working days or any extension of time granted. The special non-working days are: 1) All statutory holidays as declared by National or Regional Government. 2) The year-end break that commences on the first working day after 16 December. Work resumes on the first working day after 5 January of the next year."
5.9.3	*Delete the contents of **Sub-Clause 5.9.3** and replace with the following:* **"**The Contractor shall give adequate written notice to the Employer's Agent of any instructions or drawings, which the Contractor may require for the execution of the Works and the Employer's Agent shall deliver such instructions and/or drawings to the Contractor. The notice shall include details of the necessary drawing or instruction, details of by when it should be issued, and details of the nature and amount of the delay likely to be suffered if it is late."
5.12.1	Add the following to Clause 5.12.1: An Extension of Time awarded only becomes effective at the original Due Completion Date if, by that date, Practical Completion has not been achieved. To adjust the Due Completion Date, the circumstance must in fact delay Practical Completion. Float belongs to the Project.
5.12.2.2	Add the following to Clause 5.12.2.2:

Clause	Description / Wording
	No extension of time will be granted in respect of any delays attributed to normal climatic conditions. Normal climatic conditions shall be deemed to include normal rainfall and associated wet conditions and materials, strong winds and extremes of temperature. However, in the event that delays to critical activities exceed the number of working days listed below for each month, then abnormal climatic conditions shall be deemed to exist, and an extension of time may be claimed in accordance with the provisions of Clause 5.12. The number of days quoted below shall be regarded as a fair estimate of the delays to be anticipated and allowed for under normal climatic conditions where inclement weather prevents or disrupts critical work. January 2 days February 2 days March 2 days April 2 days May 2 days June 4 days July 4 days August 4 days September 4 days October 2 days November 2 days December 2 days Claims for delays for abnormal climatic conditions shall be accompanied by substantiating facts and evidence, which shall be submitted timeously as each day or half-day delay is experienced. It shall be further noted that where the critical path is not affected, no extension of time for abnormal climatic conditions or for any other reason will be entertained.
5.12.3	Replace the entire sub-clause with the following: "If extension of time is granted, the Contractor shall be paid for such actual delays incurred within the extension period granted, at the rate tendered in the Bill of Quantities for extension of time. For the evaluation of concurrent delays, the delay and disruption protocol of the society of construction law will be applied. Extension of time for concurrent delays may be approved without costs."
5.12.4	*Delete the contents of **Clause 5.12.4** and replace with the following:* "instead of granting extension of time, if feasible, the Employer's Agent may request the Contractor to accelerate the rate of progress to achieve Practical Completion without extension of time and agree the cost for payment of such acceleration in accordance with Clause 5.7.3."
5.12.5	**Add the following** to Clause 5.12 5.12.5 Critical Path Provision A delay in so far as extension of time is concerned, will be regarded as a delay only if, on a claim by the Contractor in accordance with the General Conditions of Contract, the Employer's Agent rules that all progress on an item or items of work on the critical path of the approved programme for the execution of the Works by the Contractor, has been brought to a halt. Delays on normal working days only, based on a working week, of five normal working days, will be taken in account for the extension of time.
5.13.1	*Delete the contents of **Sub-Clause 5.13** and replace with the following:*

Clause	Description / Wording
	If the Contractor fails by the Due Completion Date to complete the Works, or any specific portion thereof that is identified in the Scope of Works to the extent which entitles him in terms of Clause 5.14.2 to receive a Certificate of Practical Completion for the Works, then the Contractor shall be liable to the Employer for the sum(s) stated below as (a) penalty/ies for every day which shall elapse between the Due Completion Date for the Works or the specific portion of the Works and the actual Date of Practical Completion of the Works or of the specific portion. The penalty for delay shall be: **R5 000 per day.**
5.14.1	*Delete the contents of **Sub-Clause 5.14.1** and replace with the following:* **"**Save as otherwise provided in the Contract, the Contractor shall be entitled to receive a Certificate of Practical Completion when the Works have reached Practical Completion. The **requirement for achieving Practical Completion** is that all components of the Works can each be used for its intended purpose within the limits of the Scope of Work (eg water retaining structures shall have passed the specified water tightness tests, bulk mains and reticulation pipelines passed the tests and the backfill completed to the levels required by the Employer's Agent). When the Works are about to reach the said stage, the Contractor shall, in writing, request a Certificate of Practical Completion and the Employer's Agent shall, within 14 days after receiving such request, either where the Works: • Has reached Practical Completion issue a Certificate of Practical Completion to the Contractor and to the Employer; or • Has not reached Practical Completion, issue a written list to the Contractor defining the incomplete work and defects to be rectified to achieve Practical Completion. Should the Employer's Agent not issue a Certificate of Practical Completion or such a list within the 14 days, Practical Completion shall be considered to have been achieved on the expiry of the 14 days of the written request in terms of Clause 5.14.1.
5.14.2	*Delete the contents of **Sub-Clause 5.14.2** and replace with the following:* **"**As soon as the work referred to in the list issued in terms of Clause 5.14.1 has been duly completed and defects that manifested after the list was issued rectified, the Employer's Agent shall deliver to the Contractor and to the Employer a Certificate of Practical Completion together with a further written list setting out the work to be completed to justify the issuing of a Certificate of Completion."
5.16.3	The latent defect period is ten (10) years.
6.2.1	*Add the following to the end of **Sub-Clause 6.2.1**:* "The security to be provided by the Contractor shall be: • A performance guarantee of ten per cent (10%) of the Contract Sum (worded exactly as per the pro forma included in C1.3). The performance guarantee shall be from an approved South African Insurance Company or Bank to be jointly and severally bound with the Contractor, in accordance with the provisions of the Form of Guarantee."
6.2.3	*Delete the contents of **Sub-Clause 6.2.3** and replace with the following:* "The Contractor shall ensure that the performance guarantee remains valid and enforceable until the issue of the Certificate of Completion and shall submit proof of renewal to the Employer's Agent."

Clause	Description / Wording
6.5.1.2.1	*Add the following to the end of **Sub-Clause 6.5.1.2.1**:* "Gross remuneration" referred to in **Sub-Clause 6.5.1.2.1** shall be the nominal hourly or monthly remuneration actually paid to workmen and foremen before any additions for the Contractor's contribution to pension, medical aid, housing, tools, unemployment insurance, site allowance etc., and also before any deductions for tax, pension, medical aid, unemployment insurance, etc."
6.5.1.2.2	*Add the following to the end of **Sub-Clause 6.5.1.2.2**:* "Net cost of materials" referred to in **Sub-Clause 6.5.1.2.2** shall be the net invoiced cost of materials after the deductions of all discounts, direct or indirect."
6.5.1.2.3	The percentage allowance to cover overhead charges is 15%.
6.6.1	In Clause 6.6.1.2.1, the first line, after the word "sums", insert ", excluding VAT," and in Clause 6.6.1.2.2, the third line, after the word "amount" insert ", excluding VAT,"
6.6.2	In Clause 6.6.2, line 4, after the word "price", insert ", excluding VAT,"
6.8.2	*Add the following to the end of **Sub-Clause 6.8.2**:* The Contract Price shall be subject to contract price adjustment, when the construction period exceeds 52 weeks. Notwithstanding the above, if special materials are specified in Part 2 of the Contract Data then the provisions of Clause 6.8.3 of the General Conditions of Contract shall apply to such special materials. Where applicable, in terms of the foregoing, the value of the certificates issued shall be adjusted in accordance with the Contract Price Adjustment Schedule with the following values for "Concrete works" and/or "Roads and earthworks": The value of "x" is 0,10. The values of the coefficients for "Concrete works" are: a = 0,25 b = 0,15 c = 0,55 d = 0,05 The values of the coefficients for "Roads and earthworks" are: a = 0,21 b = 0,27 c = 0,42 d = 0,10 The base month is the sixth month after the tender closing date. Furthermore, the Contract Price Adjustment Schedule shall be amended as follows: "L" is the "Labour Index" and shall be the Consumer Price Index (CPI) for "All items (CPI Headline)", as published in the Statistical News Release, P0141: Table A – Consumer Price Index: Main Indices of Statistics South Africa. "P" is the "Plant Index" and shall be the Construction Materials Price Index for "Plant and Equipment" as published in the Statistical News Release P0151.1, Table 4 – Mining and construction plant and equipment price index of Statistics South Africa. "M" is the "Materials Index" and shall be the Construction Materials Price Index for selected materials, Materials for "Civil Engineering material – roads, general (excluding bitumen)," as published in the Statistical News Release P0151.1, Table 6 – Civil engineering material price indices of Statistics South Africa

	"F" is the "Fuel Index" and shall be the Producer Price Index (PPI) for "Coal and Petroleum Products - Diesel", as published in the Statistical News Release P0142.1: Table 1 –PPI for final manufactured goods of Statistics South Africa. The amount "Ac" shall be sub-divided into Ac1 and Ac2, as appropriate, and each of these shall be multiplied by its Contract Price Adjustment Factor (CPAF), with the resultant amounts added together to produce the adjustment as envisaged in the CPA Schedule: where Ac1 is the proportion of Ac applicable to "Concrete works", and Ac2 is the proportion of Ac applicable to "Roads and earthworks" and where Ac1 = T1 – S1 – D1 – E1 – G1 – Ap1, and Ac2 = T2 – S2 – D2 – E2 – G2 – Ap2 in which formulae the values associated with the symbols T1 and T2…. Ap1 and Ap2 shall be applicable to the proportions of T ….. Ap in "Concrete works" and "Roads and earthworks", respectively. Furthermore, the value of the General Items shall be proportional to the value of work done and materials on Site in T1 and T2 respectively
6.8.3	*Add the following to the end of **Sub-Clause 6.8.3**:* Contractor is required to list all the special material subject to price variation and the current exchange rate in the material is subject to foreign exchange: **MATERIAL** | **CURRENT RATE** | **FOREIGN EXCHANGE RATE** | | | | | | | | | The submitted price(s) will be used as the base price(s) for price variation and during construction only the prices of the same source / supplier submitted in the tender will be used for calculation of the price variation.
6.8.4	*Add the following to Clause 6.8.4:* Notwithstanding the above, in the event that a public holiday is proclaimed after 28 days before the closing date for tenders, no costs other than those that can be claimed under Clause 5.12.3 shall be added to the contract price. *Add the following after Clause 6.8.4*

STELLENBOSCH
STELLENBOSCH • PNIEL • FRANSCHHOEK
MUNISIPALITEIT • UMASIPALA • MUNICIPALITY

6.8.5	If price adjustment for variations in the cost of plant and materials imported from outside of South Africa is provided for in the contract data, such adjustment shall be based on the information contained on the schedule titled "Price Basis for Imported Resources" and as below. For the purposes of this clause the Rand value of imported Plant and Materials inserted on the schedule titled "Price Basis for Imported Resources" (column (F)) shall be the value in foreign currency (column (A)) converted to South African Rand (column (C)) by using the closing spot selling rate quoted by Employer's main banker, ABSA, on the Base Date (seven calendar days before tender closing date) rounded to the second decimal place (column(B)), to which shall be added any Customs Surcharge and Customs Duty applicable at that date (columns (D) and (E)).
6.8.5.1	Adjustment for variations in rates of exchange: (a) The value in foreign currency inserted in column (A) shall be subject to clause (h) below when recalculating the Rand value. (b) The rate of exchange inserted in column (B) shall be the closing spot selling rate quoted by **Employer's** main banker, ABSA, on the Base Date, rounded to the second decimal place, subject to sub-paragraph (c) below. (c) If the rate of exchange inserted by the Tenderer differs from the ABSA rate referred to above, then the ABSA rate shall apply and the Rand value in columns (C) and (F) shall be recalculated accordingly, without altering the price in the Schedules of Quantities for the relevant items. (d) If a tender from a supplier or sub-contractor provides for variations in rates of exchange, the Contractor may **only** claim for variations in rates of exchange if he binds the supplier or sub-contractor to the same provision to take out forward cover as described in sub-paragraph (e) below. (e) The Contractor (or supplier or sub-contractor) shall within five working days from the date of placing a firm order on an overseas supplier, cover or recover forward by way of a contract with a bank which is an authorised foreign exchange dealer, the foreign exchange component of the cost of any imported Plant and Materials inserted by the Tenderer on the schedule titled "**Price Basis for Imported Resources"**. (f) When the Contractor (or supplier or sub-contractor) so obtains forward cover, the Contractor shall immediately notify the Employer of the rate obtained and furnish the Employer with a copy of the foreign exchange contract note. (g) Based on the evidence provided in sub-paragraph (f) above, the value in Rand inserted in column (C) on the schedule titled "**Price Basis for Imported Resources"** shall be recalculated using the forward cover rate obtained, and any increase or decrease in the Rand value defined in this clause shall be adjusted accordingly, subject to sub-paragraph (h) below. Failure to provide such evidence shall result in no such recalculation shall be considered by the Employer. (h) The adjustments shall be calculated upon the value in foreign currency in the Contractor's (or supplier's or sub-contractor's) **forward cover contract**, provided that,

	should this value exceed the value in foreign currency inserted in column (A) of the schedule titled "**Price Basis for Imported Resources**, then the value in column (A) shall be used
6.8.5.2	Adjustment for variations in customs surcharge and customs duty (a) Any increase or decrease in the Rand value between the amounts of Customs Surcharge and Customs Duty inserted on the schedule titled "**Price Basis for Imported Resources"** and those amounts actually paid to the Customs and Excise Authorities, which are due to changes in the percentage rates applicable or to the foreign exchange rate used by the authorities, shall be adjusted accordingly. (b) The Tenderer shall state the Customs Duty Tariff Reference applicable to each item and the Contractor shall advise the Employer's Agent of any changes which occur
6.8.5.3	Adjustment for variation in labour and material Costs If the prices for imported Plant and Materials are not fixed, the Contractor shall in his Tender specify the formula for calculating Contract Price Adjustments normally used in the country of manufacture and the indices and relative proportions of labour and material on which his Tender prices are based. Evidence of the indices applicable shall be provided with each claim. The indices applicable 42 days before contractual dispatch date from the factory will be used for the purposes of Contract Price Adjustment. Failure to specify a formula in the Tender shall mean that the prices are fixed or shall be deemed to be fixed
6.9.1	Add to Clause 6.9.1: "The Contractor shall where practicable before delivery, and in any event not later than 24 hours after delivery to the Site, inform the Employer's Agent of any materials which are not his sole property.".
6.9.2	In Clause 6.9.2, last line, amend "Works" to read "Permanent Works".
6.10.1	In Clause 6.10.1.5, line 4 amend "documentary evidence" to read "a signed statement". The Contractor shall attach to his certificate the required information regarding the nature, number etc. of labour employed.
6.10.1.5	The percentage advance on materials not yet built into permanent works is 80% (eighty percent) of the specified item on the Bill of Quantities.
6.10.3	The percentage retention on the amounts due to the Contractor is 10% (ten percent).

Clause	Description / Wording
	The "Limit of the retention money" is 5% (five percent) of the Contract Price.
7.2.1	Add at the end of Clause 7.2.1: "Unless otherwise directed in writing by the Employer's Agent, materials for the Permanent Works shall be new and unused.
7.4.4.1	*Replace the comma after the word* "them" *in the last line of* ***Sub-Clause 7.4.4.1*** with a full stop, and replace the word "and" with the following: "The cost of all tests and testing required as part of the Contractor's own quality control programme, whether particularised or not, shall be deemed to have been allowed for in his tender; and"
7.8	The Defects Liability Period shall be 12(twelve) months, measured from the date of Certificate of Completion.
7.8.1	In subclause 7.8.1 delete the following: "(fair wear and tear excepted)"
7.8.2.2	In subclause 7.8.2.2 add the following: ", subject to such work being done on a written instruction by the Employer's Agent."
8.3.1	**Excepted risks** In Clause 8.3.1.9 insert at the beginning, "Except where the Contract specifically so provides,".
8.6.1	*Add the following to the end of* ***Sub-Clause 8.6.1****:* "Insurances shall be maintained in force for the duration of the Contract, and in respect of Sub-Contractors, the Contractor shall be deemed to have complied with the provisions of the requirements relating to insurance by ensuring that the Sub-Contractors have effected such insurances."
8.6.1.1.2	The value of the materials supplied by the Employer to be included in the insurance sum is Nil.
8.6.1.1.3	The amount to cover professional fees for repairing damages and loss to be included in the insurance sum is 15% (fifteen percent) of the Contract Price.
8.6.1.2	*Add the following to the end of* ***Sub-Clause 8.6.1.2****:* "SASRIA (Riot) Certificate to be issued in joint names of Employer and Contractor for the full value of the works (including VAT)."
8.6.1.3	The limit of indemnity shall be R 10 000 000,00. Add to Clause 8.6.1.3: "The minimum amount of insurance required in terms of this Clause shall be per event, the number of events being unlimited.
8.6.1.5	Add the following to the end of Sub-Clause 8.6.1.5: "Furthermore, the insurance cover effected by the Contractor shall meet the following requirements: a) Insurance of Construction Plant and Equipment (including tools, offices and other temporary structures and contents) and all other items (except

Clause	Description / Wording
	those intended for incorporation into the Works) brought onto the site for a sum sufficient to provide for their replacement. b) Insurance in terms of the provisions of the Compensation for Occupational Injuries and Diseases Act No. 130 of 1993. c) Motor Vehicle Liability Insurance comprising (as a minimum) "Balance of Third Party" Risks including Passenger Liability Indemnity. d) Where the contract involves manufacturing and/or fabrication of the works or part thereof at premises other than the Site, the Contractor shall satisfy the Employer that all materials and equipment for incorporation in the works are adequately insured during manufacture and/or fabrication. In the event of the Employer having an insurable interest in such works during manufacture or fabrication then such interest shall be noted by endorsement to the Contractor's Policies of Insurance. e) The insurance policy held by the Contractor shall cover “wet risks” where a portion of the works is subject to possible, occasional or regular inundation.” f) Where one or more hired vehicles or Contractor’s own vehicles arerequired for the Engineer’s site monitoring staff, such vehicles are to be fully comprehensively insured. g) Insurance of all materials stored off Site, and intended for incorporation in the Permanent Works, including their delivery to the Site and off-loading on Site, to the value of such materials for which payment is made in terms of Clause 6.10.1.1 hereof.
8.6.5	*In the second line of* ***Sub-Clause 8.6.5****, after the word* "effected" *add the words* "in the joint names of the Employer and the Contractor" *Add the following to the end of* ***Sub-Clause 8.6.5****:* "The insurance policy shall contain a specific provision whereby cancellation of the policy prior to the end of the period referred to in Cause 8.2.1 cannot take place without the prior written approval of the Employer.” “The Employer shall approve (or disapprove) the terms of the insurances within fourteen (14) days from the date of receipt of the policies provided in terms of Clause 8.6.5.”.
8.6.6	Add to Clause 8.6.6: "The policies and the proof of payment of premiums and continuity of the policies shall be produced within fourteen (14) days.".
8.6.8	Add Clause 8.6.8: "In the event of any claim arising under the policies held in terms of this Clause, the Contractor shall forthwith take all necessary steps to lodge his claim on the joint behalf of himself and the Employer, and to secure settlement of such claim, and he shall submit to the Employer’s Agent copies of all claims and associated documents. The claim submitted by the Contractor shall cover the cost of repairing and making good as required by Clauses 8.2.2.1 and 8.2.2.3.".

STELLENBOSCH
STELLENBOSCH • PNIEL • FRANSCHHOEK
MUNISIPALITEIT • UMASIPALA • MUNICIPALITY

Clause	Description / Wording
9.1.4	Replace the contents of Clause 9.1.4 with the following: "Up to the time of termination of the Contract by either party in terms of this Clause, or until the Contractor gives notice in terms of this Clause to terminate the Contract and the Contractor is precluded from exercising his right to terminate the Contract because the Employer agrees to bear any resultant additional costs provided for in Clause 9.1.2.2 hereof, the Contractor: a) will be entitled to an extension of calendar time for working days lost as may be approved by the Employer's Agent, and b) will be reimbursed the cost of delays per working day, where the number of working days will be determined pro rata the effect the delays have on the progress of the work as agreed with the Employer's Agent. Payment in full and final settlement will be made at the rates tendered for the payment items specially provided in the Bill of Quantities Where the circumstances described in Clauses 9.1.1 and 9.1.2 are applicable only to a certain portion of the contract, the Employer's Agent will decide after consulting the Contractor, to what extent the Contract as a whole is affected and whether or not a claim in terms of this Clause can be submitted. No payment will be made in terms of this Clause after the expiry of the Due Completion Date.
9.2.1.3.2	*Add the following to the end of* ***Sub-Clause 9.2.1.3.2:*** "or to maintain and extend the validity of the performance guarantee until the Certificate of Completion; or" *Delete the contents of* ***Sub-Clause 9.2.1.3.6*** *and replace with the following:* "Is not executing the Works in accordance with the Contract, or is neglecting or failing to carry out his obligations under the Contract, inter alia to comply with any instruction under Clause 4.2; or"
New 9.2.1.3.9	An official or other role player committed any corrupt or fraudulent act during the procurement process or in the execution of the contract that benefited the Contractor.
New 9.2.1.3.10	An official or other role player committed any corrupt or fraudulent act during the procurement process or in the execution of the contract that benefited the Contractor."
10.1.1.1	*Delete the contents of* ***Sub-Clause 10.1.1.1*** *and replace with the following:* "The Contractor shall within 28 days after the commencement of each circumstance, event, act or omission giving rise to such a claim, deliver to the Employer's Agent a written claim, referring to this Clause and setting out:"
10.1.1.1.3	*Delete the contents of* ***Sub-Clause 10.1.1.1.3*** *and replace with the following:* **"**The length of the extension of time, if any, claimed and the basis of the calculation by incorporating the effects of each circumstance, event, act or omission on the critical path of an approved programme, indicating the delay to Practical Completion, and"
10.1.1.2	*Delete the contents of* ***Sub-Clause 10.1.1.2*** *and replace with the following:* "If, by reason of the nature and circumstances of the claim, the Contractor cannot reasonably comply with all or any of the provisions of Clause 10.1.1.1.11 to 10.1.1.1.4 to deliver a claim within the said period of 28 days, he shall:

Clause	Description / Wording
10.1.1.2.1	Within the said period of 28 days issue a further notice referring to the relevant notice in terms of Clause 10.1.2 and confirming his intention to make the claim and comply with such of the requirements of Clause 10.1.1.1.1 to 10.1 .1.1.4 as he reasonably can, and
10.1.1.2.2	As soon as practicable, comply with such of the requirements of Clause 10.1.1.1.1 lo 10.1.1.1.4 as have not yet been complied with."
10.1.1.3	*Delete the contents of **Sub-Clause 10.1.1.3** and replace with the following:* "If the circumstance, event, act or omission relating to the claim are of an ongoing nature:
10.1.1.3.1	the Contractor shall, within 14 days after the commencement of each circumstance, event, act or omission giving rise to such a claim, deliver to the Employer's Agent a written notice of his intention to submit a claim, referring to this Clause and setting out the particulars of the circumstance, event, act or omission. Provided that the additional payment or compensation or delay that occurred before 14 days prior the date on which the notice in terms of this clause was delivered, shall be deemed to be covered by the rates and/or prices set out in the Pricing Data and the time stated in the Contract Data relating to Clause 5.5.1.
10.1.1.3.2	The Contractor shall, in addition to delivering the said further notice within 28 days in terms of Clause 10.1.1.2.1, each month deliver to the Employer's Agent, in writing, updated particulars required in terms of Clause 10.1.1.1.1 to 10.1.1.1.4 and, within 28 days after the end of the circumstance, event, act or omission deliver his final claim."
10.1.1.4	*Add the following new **Sub-Clause 10.1.1.4**:* Discussions of claims during site meetings and minutes of such discussions shall not be regarded as a claim or notice by the Contractor of his intention to make a claim unless it is supported by a written submission in terms of Clause 10.1.1.1"
10.1.2	The Contractor shall issue an early warning notifying to the Employer's Agent as soon as he becomes aware of any circumstance, event, act or omission which could: a) Increase the Contract Prices, b) Delay Practical Completion, or c) Impact on quality, or d) impair the performance of the Works in use
10.1.4	If, in respect of any claim to which this Clause refers, the Contractor fails to deliver his claim within the 28 day claim period in terms of Clause 10.1.1.1 or does not deliver a further notice within the period of 28 days in terms of Clause 10.1.1.2.1 or does not deliver his final claim within 28 days after the circumstance, event, act or omission ceased in terms of Clause 10.1 .1 .3.2, the Due Completion Date shall not be extended, the Contractor shall not be entitled to additional payment, and the Employer shall be discharged all liability in connection with the claim. Provided that failure by the Contractor to give an early warning notice in terms of Clause 10.1.2 which an experienced Contractor could have given, the claim shall be assessed by the Employer's Agent and the ruling in terms of Clause 10.1.5 shall be taken into account the lack of mitigation measures employed due the lack of such early warning notice."
10.1.5	Where the Employer's Agent fails to make a ruling within such 28 days the claim shall be deemed to be refused
10.3.2	Amicable settlement in terms of Sub-Clause 10.4 shall be utilised for all disputes prior to referring any dispute to adjudication
10.4.2	Where an amicable settlement fails subsequently to adjudication, the dispute shall be resolved by arbitration.

STELLENBOSCH
STELLENBOSCH • PNIEL • FRANSCHHOEK
MUNISIPALITEIT • UMASIPALA • MUNICIPALITY

Clause	Description / Wording
10.5.1	Dispute resolution shall be by means of adjudication
10.5.3	The number of Adjudication Board Members to be appointed is one (1).
10.7.1	The determination of disputes which are unresolved in terms of Clause 10.5.3 shall be by arbitration.
10.10.1	*Delete the contents of **Sub-Clause 10.10.1** and replace with the following:* Nothing herein contained shall deprive the Contractor or the Employer of either party's right to institute immediate court proceedings in respect of failure by the Employer or the Contractor, as the case may be, to pay the amount of a payment certificate on its due date, or to pay any amount of retention money on its due date for payment.
10.10.3	*Delete the contents of **Sub-Clause 10.10.3** and replace with the following:* The Adjudication Board, arbitrator and the court shall have full power to open up, review and revise any ruling, decision, order, instruction, certificate or valuation of the Employer's Agent. The Arbitrator and the court shall have full power to and to reconsider any decision by the Adjudication Board relevant to the matter in dispute, and neither party shall be limited in such proceedings before such arbitrator or court to the evidence or arguments put before the Employer's Agent for the purpose of obtaining his ruling, or the Adjudication Board for the purpose of obtaining a decision.
	ADDITIONAL CONDITIONS OF CONTRACT
11	The Contractor is to provide all labour, material, workmanship, machinery and everything which is or may be necessary in and for the execution and entire completion of the Contract in accordance with the Conditions of Contract, Drawings and Scope of Work.
12	The Contractor shall treat the details of the Works comprised in this Contract as private and confidential (save in so far as may be necessary for the purposes hereof) and shall not publish or disclose the same or any particulars thereof in any trade or technical paper elsewhere without prior written consent of the Engineer.

SPECIAL MATERIALS SCHEDULE

Each material dealt with as a special material in terms of Clause 4.1 of the Contract Price Adjustment Schedule of the General Conditions of Contract is stated in the list below. The provisions of Clause 6.8.3 of the General Conditions of Contract shall apply to such special materials. The base prices for the special materials (current at the time of tender) shall be as stated in the schedule below, or where required, shall be furnished by the tenderer/contractor. Only those materials listed by the Employer below shall be considered as special materials.

Special Material	Unit	Base Price
Structural steel	t	The ArcelorMittal prices, as published in their official price lists, current at the time of tender closing, will be used as the base prices for determining the adjustment in steel prices.
Steel reinforcing bars	t	
Bitumen (50/70 Penetration Grade)	t	
Bitumen (70/100 Penetration Grade)	t	The bitumen index, as published on the SAPPMA website will be used for the adjustment in plastic prices
Electrical switchgear	t	

Electrial cables	m	
Electrial components	%	

Conditions:

1) When called upon to do so, the contractor shall substantiate the prices to be used to determine the adjustment in respect of the special materials listed above with acceptable documentary evidence.
2) In the case of bituminous products, the Employer has provided, in the schedule above, a base rate for bitumen upon which the tendered rates will be deemed to be based, and which will be used for determining the adjustment in the price of such bituminous products.
3) Where an adjustment for the variation in the price of bituminous products is claimed, the claim must be substantiated by a declaration from the manufacturer, confirming the source of bitumen used in such bituminous products at the time in question.
4) Where the source of bitumen (the refinery) is located in the Western Cape Province, or where bitumen sourced from abroad is landed at a port in the Western Cape, the cost of transporting such bitumen within the boundaries of the Western Cape shall be included in the rate for bituminous products. Extra-over rates to cover the cost of transporting bitumen from beyond the borders of the Western Cape have been measured separately in the Bill of Quantities.
5) Where imported bitumen used in bituminous products is landed at a port beyond the borders of the Western Cape, the importers must clearly state whether or not their price is inclusive of transport to the Western Cape, which will determine whether extra-over transport costs are applicable, or not. The price of the imported bitumen itself must be expressed as a landed price in ZAR.

STELLENBOSCH
STELLENBOSCH • PNIEL • FRANSCHHOEK
MUNISIPALITEIT • UMASIPALA • MUNICIPALITY

PART 2: DATA PROVIDED BY THE CONTRACTOR

Clause	Description / Wording
1.1.1.4	The time for achieving Practical Completion is …… months (measured from the Commencement Date)
1.1.1.9	The Contractor is: …… *(The legal name of the Contractor)*
1.2.1.2	The Contractor's address for receipt of communications and notices is: Address (Postal): ..... Address (Physical): .... Telephone: ..... Facsimile: ..... Email: ……

STELLENBOSCH
STELLENBOSCH • PNIEL • FRANSCHHOEK
MUNISIPALITEIT • UMASIPALA • MUNICIPALITY

C1.3 PERFORMANCE GUARANTEE (PRO FORMA)

GUARANTOR DETAILS AND DEFINITIONS

"Guarantor" means: .....

Physical address: .....

"Employer" means: .....

"Contractor" means: .....

"Employer Agent" means: .....

"Works" means: .....

"Site" means:

"Contract" means: The Agreement made in terms of the Form of Offer and Acceptance and such amendments or additions to the Contract as may be agreed in writing between the parties.

"Contract Sum" means: The accepted amount inclusive of tax of R .....

Amount in words: .....

"Guaranteed Sum" means: The maximum aggregate amount of R.....

Amount in words: .....

"Expire Date" means: .....

CONTRACT DETAILS

Employer Agent issues: Interim Payment Certificates, Final Payment Certificate and the Certificate Completion of the Works as defined in the Contract.

PERFORMANCE GUARANTEE

1 The Guarantor's liability shall be limited to the amount of the Guaranteed Sum.

2 The Guarantor's period of liability shall be from and including the date of issue of this Performance Guarantee and up to and including the Expiry Date or the date of issue by the Employer Agent of the Certificate of Completion of the Works or the date of payment in full of the Guaranteed Sum, whichever occurs first. The Employer Agent and/or the Employer shall advise the Guarantor in writing of the date on which the Certificate of Completion of the Works has been issued.

3 The Guarantor hereby acknowledge that:

3.1 any reference in this Performance Guarantee to the Contract is made for the purpose of convenience and shall not be construed as any intention whatsoever to create an accessory obligation or any intention whatsoever to create a suretyship;

3.2 its obligation under this Performance Guarantee is restricted to the payment of money.

4 Subject to the Guarantor's maximum liability referred to in 1, the Guarantor hereby undertakes to pay the Employer the sum certified upon receipt of the documents identified in 4.1 to 4.3:

4.1 A copy of a first written demand issued by the Employer to the Contractor stating that payment of a sum certified by the Employer Agent in an Interim or Final Payment Certificate has not been made in terms of the Contract and failing such payment within seven (7) calendar days, the Employer intends to call upon the Guarantor to make payment in terms of 4.2;

4.2 A first written demand issued by the Employer to the guarantor at the Guarantor's physical address with a copy to the Contractor stating that a period of seven (7) days has elapsed since the first written demand in terms of 4.1 and the sum certified has still not been paid;

4.3 A copy of the aforesaid payment certificate which entitles the Employer to receive payment in terms of the Contract of the sum certified in 4.

5 Subject to the Guarantor's maximum liability referred to in 1, the Guarantor undertakes to pay to the Employer the Guaranteed Sum or the full outstanding balance upon receipt of a first written demand from the Employer to the Guarantor at the Guarantor's physical address calling up this Performance Guarantee, such demand stating that:

5.1 the Contract has been terminated due to the Contractor's default and that this Performance Guarantee is called up in terms of 5; or

5.2 a provisional or final sequestration or liquidation court order has been granted against the Contractor and that the Performance Guarantee is called up in terms of 5; and

5.3 the aforesaid written demand is accompanied by a copy of the notice of termination and/or the provisional/final sequestration and/or the provisional liquidation court order.

6 It is recorded that the aggregate amount of payments required to be made by the Guarantor in terms of 4 and 5 shall not exceed the Guarantor's maximum liability in terms of 1.

7 Where the Guarantor has made payment in terms of 5, the Employer shall upon the date of issue of the Final Payment Certificate submit an expense account to the Guarantor showing how all monies received in terms of this Performance Guarantee have been expended and shall refund to the Guarantor any resulting surplus. All monies refunded to the Guarantor in terms of this Performance Guarantee shall bear interest at the prime overdraft rate of the Employer's bank compounded monthly and calculated from the date payment was made by the Guarantor to the Employer until the date of refund.

8 Payment by the Guarantor in terms of 4 or 5 shall be made within seven (7) calendar days upon receipt of the first written demand to the Guarantor.

9 Payment by the Guarantor in terms of 5 will only be made against the return of the original Performance Guarantee by the Employer.

10 The Employer shall have the absolute right to arrange his affairs with the Contractor in any manner which the Employer may deem fit and the Guarantor shall not have the right to claim his release from this Performance Guarantee on account of any conduct alleged to be prejudicial to the Guarantor.

STELLENBOSCH
STELLENBOSCH • PNIEL • FRANSCHHOEK
MUNISIPALITEIT • UMASIPALA • MUNICIPALITY

11 The Guarantor chooses the physical address as stated above for the service of all notices for al purposes in connection herewith.

12 This Performance Guarantee is neither negotiable nor transferable and shall expire in terms of 2, where after no claims will be considered by the Guarantor. The original of this Guarantee shall be returned to the Guarantor after it has expired.

13 This Performance Guarantee, with the required demand notices in terms of 4 or 5, shall be regarded as a liquid document for the purposes of obtaining a court order.

14 Where this Performance Guarantee is issued in the Republic of South Africa the Guarantor hereby consents in terms of Section 45 of the Magistrate's Courts Act No 32 of 1944, as amended, to the jurisdiction of the Magistrate's Court of any district having jurisdiction in terms of Section 28 of the said Act, notwithstanding that the amount of the claim may exceed the jurisdiction of the Magistrate's Court.

Signed at

Date

Guarantor's signatory: (1) .....

Capacity

Guarantor's signatory: (2) .....

STELLENBOSCH
STELLENBOSCH • PNIEL • FRANSCHHOEK
MUNISIPALITEIT • UMASIPALA • MUNICIPALITY

C1.4 AGREEMENT IN TERMS OF THE OCCUPATIONAL HEALTH AND SAFETY ACT, 1993 (ACT NO 85 OF 1993)

THIS AGREEMENT made at .....

on this the day of ..... in the year ……

between ..... *[hereinafter called "the Employer"]* of the one

part, herein represented by .....

in his capacity as .....

and

[hereinafter called "the Mandatary"] of the other part, herein represented by .....

in his capacity as .....

WHEREAS the Employer is desirous that certain works be constructed, viz

B/SM 21/27: MAIN ROAD INTERSECTION IMPROVEMENTS: STRAND / ADAM TAS / ALEXANDER

and has accepted a Tender by the Mandatary for the construction, completion and maintenance of such Works and whereas the Employer and the Mandatary have agreed to certain arrangements and procedures to be followed in order to ensure compliance by the Mandatary with the provisions of the Occupational Health and Safety Act, 1993 (Act 85 of 1993);

NOW THEREFORE THIS AGREEMENT WITNESSETH AS FOLLOWS:

1 The Mandatary shall execute the work in accordance with the Contract Documents pertaining to this Contract.

2 This Agreement shall hold good from its Commencement Date, which shall be the date of a written notice from the Employer or Employer Agent requiring him to commence the execution of the Works, to either

(a) the date of the Final Approval Certificate issued in terms of Clause 5.16.1 of the General Conditions of Contract *[hereinafter referred to as "the GCC"],* or

(b) the date of termination of the Contract in terms of Clauses 9.1, 9.2 or 9.3 of the GCC.

3 The Mandatary declares himself to be conversant with the following:

(a) All the requirements, regulations and standards of the Occupational Health and Safety Act, 1993 (Act No 85 of 1993), hereinafter referred to as "The Act", together with its amendments and with special reference to the following sections of The Act:

(i) Section 8 : General duties of employers to their employees;

(ii) Section 9 : General duties of employers and self-employed persons to persons other than employees;

(iii) Section 37 : Acts or omissions by employees or mandataries, and

(iv) Subsection 37(2) relating to the purpose and meaning of this Agreement.

(b) The procedures and safety rules of the Employer as pertaining to the Mandatary and to all his subcontractors.

4 In addition to the requirements of Clause 8.4 of the GCC and all relevant requirements of the Contract, the Mandatary agrees to execute all the Works forming part of this Contract and to operate and utilise all machinery, plant and equipment in accordance with the Act.

5 The Mandatary is responsible for the compliance with the Act by all his subcontractors, whether or not selected and/or approved by the Employer.

6 The Mandatary warrants that all his and his subcontractors' workmen are covered in terms of the Compensation for Occupational Injuries and Diseases Act, 1993 which cover shall remain in force whilst any such workmen are present on site. A letter of good standing from the Compensation Commissioner to this effect must be produced to the Employer upon signature of the agreement.

7 The Mandatary undertakes to ensure that he and/or subcontractors and/or their respective employers will at all times comply with the following conditions:

(a) The Mandatary shall assume the responsibility in terms of Section 16.1 of the Occupational Health and Safety Act. The Mandatary shall not delegate any duty in terms of Section 16.2 of this Act without the prior written approval of the Employer. If the Mandatary obtains such approval and delegates any duty in terms of Section 16.2 a copy of such written delegation shall immediately be forwarded to the Employer.

(b) All incidents referred to in the Occupational Health and Safety Act shall be reported by the Mandatary to the Department of Labour as well as to the Employer. The Employer will further be provided with copies of all written documentation relating to any incident.

(c) The Employer hereby obtains an interest in the issue of any formal inquiry conducted in terms of Section 32 of the Occupational Health and Safety Act into any incident involving the Mandatary and/or his employees and/or his subcontractors.

In witness thereof the parties hereto have set their signatures hereon in the presence of the subscribing witnesses:

SIGNED FOR AND ON BEHALF OF THE EMPLOYER: .....

WITNESS 1 ..... 2 .....

NAME 1 ..... 2 .....
(IN CAPITALS)

SIGNED FOR AND ON BEHALF OF THE MANDATARY: .....

WITNESS 1 ..... 2 .....

NAME 1 ..... 2 .....
(IN CAPITALS)

STELLENBOSCH
STELLENBOSCH • PNIEL • FRANSCHHOEK
MUNISIPALITEIT • UMASIPALA • MUNICIPALITY

CERTIFICATE OF AUTHORITY FOR SIGNATORY TO AGREEMENT IN TERMS OF OCCUPATIONAL HEALTH AND SAFETY ACT, 1993 (ACT NO 85 OF 1993)

The signatory for the company that is the Contractor in terms of the above-mentioned Contract and the Mandatory in terms of the above-mentioned Act shall confirm his or her authority thereto by attaching to this page a duly signed and dated copy of the relevant resolution of the Board of Directors.

An example is given below:

"By resolution of the Board of Directors passed at a meeting held on ..... 20.....,

Mr/Ms whose signature

appears below, has been duly authorised to sign the AGREEMENT in terms of THE OCCUPATIONAL

HEALTH AND SAFETY ACT, 1993 (ACT NO 85 OF 1993) on behalf of
……

……..

SIGNED ON BEHALF OF THE COMPANY : .....

IN HIS/HER CAPACITY AS : .....

DATE :

SIGNATURE OF SIGNATORY : .....

WITNESS 1 ..... 2 .....

NAME 1 ..... 2 .....
(IN CAPITALS)

STELLENBOSCH
STELLENBOSCH • PNIEL • FRANSCHHOEK
MUNISIPALITEIT • UMASIPALA • MUNICIPALITY

C1.5 Contract of Temporary Employment as Community Liaison Officer

Construction Contract No.: **B/SM 21/27**

PROJECT: **MAIN ROAD INTERSECTION IMPROVEMENTS: STRAND / ADAM TAS / ALEXANDER**

AGREEMENT made between the CONTRACTOR
and the Community Liaison Officer… ..... ,
hereafter referred to as the CLO, for the appointment and employment of a CLO for the duration of the work in respect of the above-named construction contract.

1. THE PARTIES HAVE AGREED THAT

The CLO will be employed by the CONTRACTOR on a temporary basis for the duration of the work from the date of signing this agreement to the date of practical completion as defined in the Contract, subject to all the conditions set out below.

2. THE DUTIES OF THE COMMUNITY LIAISON OFFICER SHALL BE:

1. to keep the community informed on the progress of the project;
2. to keep the Contractor informed on relevant Community affairs and possible grievances;
3. to manage the recruitment of workers from the Sub-Council Job-Seekers Database;
4. to assist the Contractor's supervisory staff in the management of the workers.

3. THE FOLLOWING CONDITIONS OF EMPLOYMENT SHALL APPLY:

The Conditions of Temporary Employment as applicable on this Contract for the workers recruited from the Community shall apply equally to the CLO, except that the rate of remuneration shall be R5,000.00 per month. These conditions that apply are listed below as they appear in the Contract of Temporary Employment:

3.1 If required to work on a statutory public holiday or Sunday the payment will be double the amount stated in the previous paragraph.

3.2 Maximum hours of work:

(i) 9¼ hours per day
(ii) 45 hours per week;
(iii) 5 days per week;
(iv) 5 hours without an interval, whereupon there shall be an interval of at least 30 minutes;
(v) A spread-over period of 12 hours.

3.3 The CLO shall be entitled to payment where he is prevented from working by reasons which are within the control of the Contractor.

3.4 On days when it is raining the Contractor may, before 9 a.m., decide not to open the site and there will be no pay.

If the Contractor closes the site between 9 a.m. and 1 p.m., the CLO will be paid half the daily wage.

If the site works later than 1 p.m., the CLO will be paid the full daily wage.

3.5 Workers and the CLO will not be permitted to work under conditions of:
(i) undisciplined or unruly behaviour;
(ii) insubordination to Team Leader, Supervisors or Management;
(iii) abuse of intoxicating substances;
(iv) criminal actions by the employee;
(v) strike action or political stayaways.

3.6 Workers, including the CLO, may be dismissed after two official written warnings for the following behaviour:

(i) undisciplined or unruly behaviour;
(ii) insubordination to Team Leader, Supervisors or Management;
(iii) abuse of intoxicating substances;
(iv) willful or negligent damage to or loss of machines or equipment.

The Contractor shall ensure that he has statements from at least two witnesses concerning any of the above situations.
The Contractor shall inform the CLO within 24 hours of any warning issued to workers employed from the Job-Seekers Database.

3.7 The CLO will be paid on a Friday afternoon every two weeks, one week in arrears.

3.8 The CLO shall be given a statement with each payment on which is recorded:

(i) the name of the Contractor;
(ii) the CLO's name;
(iii) the number of days worked by the CLO;
(iv) the rate per day;
(v) the details of any deductions made;
(vi) the actual amount paid to the CLO.

3.9 No deduction shall be made from the remuneration except where the CLO consents in writing or unless the Contractor is permitted or required to do so by law or the order of any competent court.

3.10 The CLO shall be supplied free of charge with all health and safety equipment required by the Occupation Health and Safety Act. The equipment shall remain the property of the Contractor.

3.11 The Contractor must give the CLO at least one week's notice of the termination of the Contract of Temporary Employment. If this is not done, the CLO must be paid earnings for five days. This condition does not apply if the CLO is dismissed.

3.12 At the end of the period of temporary employment, the Contractor shall provide a Certificate of Service recording the Contractor's name, the CLO's name and address, the period of service, the type of work on which the CLO was engaged and the rate of remuneration on termination.

4. TERMINATION OF AGREEMENT

4.1 If the CLO can no longer perform and execute his/her duties as detailed in this agreement, this agreement will be terminated without prejudice to any rights under this agreement.

STELLENBOSCH
STELLENBOSCH • PNIEL • FRANSCHHOEK
MUNISIPALITEIT • UMASIPALA • MUNICIPALITY

5. THE CONDITIONS OF THIS AGREEMENT

5.1 The parties expressly declare that this agreement contains all the conditions negotiated between them, and no condition or stipulation not contained herein shall be binding upon the parties.

6. THUS, AGREED AND SIGNED BY THE PARTIES:

Contractor: …….....

Signature: …….....

Date: …….....

Community Liaison officer: …….....

Signature: …….....

Date: …….....

STELLENBOSCH
STELLENBOSCH • PNIEL • FRANSCHHOEK
MUNISIPALITEIT • UMASIPALA • MUNICIPALITY

PART C2 PRICING DATA

C2.1 PRICING INSTRUCTIONS ..... 143 - 144

C2.2 BILL OF QUANTITIES ..... 145 - 262

C2.1 PRICING INSTRUCTIONS

1 The General Conditions of Contract, the Contract Data, the Specifications (including the Project Specifications) and the drawings shall be read in conjunction with the Bill of Quantities.

2 The Bill comprises items covering the Contractor's profit and costs of general liabilities and of the construction of Temporary and Permanent Works.

Although the Tenderer is at liberty to insert a rate of his own choosing for each item in the Bill, he should note the fact that the Contractor is entitled, under various circumstances, to payment for additional work carried out and that the Employer Agent is obliged to base his assessment of the rates to be paid for such additional work on the rates the Contractor inserted in the Bill.

Clause 8 of each Standardized Specification, and the measurement and payment clause of each Particular Specification, read together with the relevant clauses of the Project Specifications, all set out which ancillary or associated activities are included in the rates for the specified operations.

3 Descriptions in the Bill of Quantities are abbreviated and may differ from those in the Standardized and Scope of Work. No consideration will be given to any claim by the Contractor submitted on such a basis. The Bill has been drawn up generally in accordance with the latest issue of Civil Engineering Quantities[6]. Should any requirement of the measurement and payment clause of the appropriate Standardised or Project Specification(s) be contrary to the terms of the Bill or, when relevant, to the Civil Engineering Quantities, the requirement of the appropriate Standardised, Project, or Particular Specification as the case may be, shall prevail.

4 Unless stated to the contrary, items are measured net in accordance with the drawings without any allowance having been made for waste.

5 The amounts and rates to be inserted in the Bill of Quantities shall be the full inclusive amounts to the Employer for the work described under the several items. Such amounts shall cover all the costs and expenses that may be required in and for the construction of the work described, and shall cover the costs of all general risks, profits, taxes (but excluding value-added tax), liabilities and obligations set forth or implied in the documents on which the Tender is based.

6 An amount or rate shall be entered against each item in the Bill of Quantities, whether or not quantities are stated. An item against which no amount or rate is entered will be considered to be covered by the other amounts or rates in the Bill.

The Tenderer shall also fill in a rate against the items where the words "rate only" appear in the amount column. Although no work is foreseen under these items and no quantities are consequently given in the quantity column, the tendered rates shall apply should work under these items actually be required.

6 South African Institution of Civil Engineers, *The Standard System of Measurement of Civil Engineering Quantities*

Should the Tenderer group a number of items together and tender one sum for such group of items, the single tendered sum shall apply to that group of items and not to each individual item, or should he indicate against any item that full compensation for such item has been included in another item, the rate for the item included in another item shall be deemed to be nil.

The tendered rates, prices and sums shall, subject only to the provisions of the Conditions of Contract, remain valid irrespective of any change in the quantities during the execution of the Contract.

7 The quantities of work as measured and accepted and certified for payment in accordance with the Conditions of Contract, and not the quantities stated in the Bill of Quantities, will be used to determine payments to the Contractor. The validity of the Contract shall in no way be affected by differences between the quantities in the Bill of Quantities and the quantities certified for payment.

Ordering of materials are not to be based on the Bill of Quantities, but only on information issued for construction purposes.

8 For the purposes of this Bill of Quantities, the following words shall have the meanings hereby assigned to them:

Unit	:	The unit of measurement for each item of work as defined in the Standardized, Project or Particular Specifications
Quantity	:	The number of units of work for each item
Rate	:	The payment per unit of work at which the Tenderer tenders to do the work
Amount	:	The quantity of an item multiplied by the tendered rate of the (same) item
Sum	:	An amount tendered for an item, the extent of which is described in the Bill of Quantities, the Specifications or elsewhere, but of which the quantity of work is not measured in units

9 The units of measurement indicated in the Bill of Quantities are metric units. The following abbreviations may appear in the Bill of Quantities:

mm	=	millimetre
m	=	metre
km	=	kilometre
km-pass	=	kilometre-pass
m^2	=	square metre
m^2-pass	=	square metre-pass
ha	=	hectare
m^3	=	cubic metre
m^3-km	=	cubic metre-kilometre
kW	=	kilowatt
kN	=	kilonewton
kg	=	kilogram
t	=	ton (1 000 kg)
%	=	per cent
PC Sum	=	prime cost sum
Prov Sum	=	provisional sum

STELLENBOSCH
STELLENBOSCH • PNIEL • FRANSCHHOEK
MUNISIPALITEIT • UMASIPALA • MUNICIPALITY

C2.2 BILL OF QUANTITIES

CIVIL WORKS – SCHEDULE 1

SECTION A: PRELIMINARY AND GENERAL

SECTION B: SITE CLEARANCE

SECTION C: EARTHWORKS

SECTION D: CABLE DUCTS

SECTION E: STORMWATER (ROAD DRAINAGE)

SECTION F: BULK STORMWATER

SECTION G: SUBBASE

SECTION H: KERBING AND CHANNELING

SECTION I: BASE

SECTION J: ASPHALT BASE AND SURFACING

SECTION K: SEGMENTED PAVING

SECTION L: ANCILLARY ROADWORKS

SECTION M: MEDIUM PRESSURE PIPELINES

SECTION N: SEWERS

SECTION O: TRAFFIC SIGNALS

ELECTRICAL WORKS – SCHEDULE 2

SECTION E1: ELECTRICAL STREET LIGHTS

ELECTRICAL WORKS – SCHEDULE 3

SECTION E2: ELECTRICAL SUB-STATION (EQUIPMENT)

ELECTRICAL WORKS – SCHEDULE 4

SECTION E3: ELECTRICAL SUB-STATION (BUILDING)

STELLENBOSCH
STELLENBOSCH • PNIEL • FRANSCHHOEK
MUNISIPALITEIT • UMASIPALA • MUNICIPALITY

BILL OF QUANTITIES
BILL 1: CIVIL

SECTION A: PRELIMINARY AND GENERAL

ITEM NO	PAYMENT	DESCRIPTION	UNIT	QTY	RATE (incl. VAT)	Amount (incl. VAT)
A	SANS 1200A	**PRELIMINARY AND GENERAL**				
A1	8.3	**FIXED-CHARGE AND VALUE-RELATED ITEMS**				
A1.1	8.3.1	Contractual Requirements	Sum	1		
	8.3.2	**Establish facilities on Site:**				
A1.2	8.3.2.1	**a) Facilities for Engineer**				
A1.2.1		1 Name board	Sum	1		
A1.2.2		Office/Conference Room	Sum	1		
A1.2.3		Survey Equipment	Sum	1		
A1.2.4		Ablution	Sum	1		
A1.2.5		Other Obligations	Sum	1		
A1.3	8.3.2.2	**b) Facilities for Contractor**				
A1.3.1		Offices and storage sheds	Sum	1		
A1.3.2		Workshops	Sum	1		
A1.3.3		Laboratories	Sum	1		
A1.3.4		Ablution and latrine facilities	Sum	1		
A1.3.5		Tools and equipment	Sum	1		
A1.3.6		Water supplies, electric power and communications	Sum	1		
A1.3.7		Dealing with water	Sum	1		
A1.3.8		Access	Sum	1		
A1.3.9		Plant	Sum	1		
A1.4	PSA 8.9	Obtaining of and allowance for payment of all applicable wayleaves	Sum	1		

ITEM NO	PAYMENT	DESCRIPTION	UNIT	QTY	RATE (incl. VAT)	Amount (incl. VAT)
Brought Forward						
A1.5	PSA 8.10	Compliance to the OHS Act including all site programmes, inductions etc.	Sum	1		
A1.6	PSA 8.10	Compliance to the NEMA Act and Tenders Environmental Management Plan	Sum	1		
A1.7	PSA 8.11	Compliance to the Quality Control Management Plan	Sum	1		
A1.8	8.3.3	Other fixed-charge obligations (Specify):.....	Sum	1		
A1.9	8.3.4	Remove Engineer's and Contractor's Site establishment on completion	Sum	1		
A.2	8.4	**TIME-RELATED ITEMS**				
A.2.1	8.4.1	Contractual Requirements	Sum	1		
	8.4.2	**Operate and maintain facilities on the Site:**				
A2.2	8.4.2.1	**a) Facilities for Engineer for duration of construction:**				
A2.2.1		1 Name boards	Sum	1		
A2.2.2		Office/Conference Room	Sum	1		
A2.2.3		Survey Equipment	Sum	1		
A2.2.4		Ablution	Sum	1		
A2.2.5		Other obligations	Sum	1		
A2.3	8.4.2.2	**b) Facilities for Contractor for duration of construction, except where otherwise stated:**				
A2.3.1		Offices and storge sheds	Sum	1		
A2.3.2		Workshops	Sum	1		
A2.3.3		Laboratories	Sum	1		
A2.3.4		Ablution and latrine facilities	Sum	1		
A2.3.5		Tools and equipment	Sum	1		
A2.3.6		Water supplies, electrical power and communications	Sum	1		

STELLENBOSCH
STELLENBOSCH • PNIEL • FRANSCHHOEK
MUNISIPALITEIT • UMASIPALA • MUNICIPALITY

ITEM NO	PAYMENT	DESCRIPTION	UNIT	QTY	RATE (incl. VAT)	Amount (incl. VAT)
Brought Forward						
A2.3.7		Dealing with water	Sum	1		
A2.3.8		Access	Sum	1		
A2.3.9		Plant	Sum	1		
A2.3.10		Supervision	Sum	1		
A2.3.11		Company and head office overhead costs	Sum	1		
A2.4	PSA 8.9	Obtaining of and allowance for payments of all applicable wayleaves	Sum	1		
A2.5	PSA 8.10	Compliance to OHS Act including site programme, induction etc	Sum	1		
A2.6	PSA 8.10	Compliance to the NEMA Act and Tenders Environmental Management Plan	Sum	1		
A2.7	PSA 8.11	Compliance to the Quality Control Management Plan	Sum	1		
A2.8	8.4.5	Other time-related obligations (Specify):.....	Sum	1		
A3	8.5	**SUMS STATED PROVISIONALLY BY ENGINEER**				
A3.1		**Survey beacons/pegs**				
A3.1.1	8.8.5	Search for, record, reference and protect survey stations, benchmarks, erf boundary pegs and other reference pegs	Prov Sum	1	12 500	12 500
A3.1.2		Overhead charges and profit on Item A3.1.1	%	12 500		
A3.1.3	8.8.5	Re-establish erf boundary pegs by a registered Land Surveyor when pegs have been ordered to be removed by the Engineer	Prov Sum	1	20 0000	20 000
A3.1.4	8.5 (b)(3)	Overhead, charges and profit on item A3.1.3	%	20 000		
A3.2		**Testing**				
A3.2.1	PSA 8.5.2	Testing of materials by Engineer (additional to that specified in the Project Specification as minimum requirements for the Contractor)	Prov Sum	1	60 000	60 000

STELLENBOSCH
STELLENBOSCH • PNIEL • FRANSCHHOEK
MUNISIPALITEIT • UMASIPALA • MUNICIPALITY

ITEM NO	PAYMENT	DESCRIPTION	UNIT	QTY	RATE (incl. VAT)	Amount (incl. VAT)
Brought Forward						
A3.2.2		Overheads charges and profit on item A3.2.1	%	60 000		
A3.3		**As-Built**				
A3.3.1	PSA 8.5.3	Location and accessing of all installed services and recording of as-built levels and positions, including the topographical survey of the site carried out by others upon completion of the works.	Prov. Sum	1	85 000	85 000
A3.3.2		Overheads, charges and profit on item A3.3.1	%	85 000		
A3.4	PSA 8.5.1	**Community liaison and community relations**				
A3.4.1		Public Liaison officer salary	Month	8	6 500	52 000
		Project Steering Committee costs (R250 per member per sitting)	Prov. Sum	48	250	12 000
A3.4.2		Overheads, charges and profit on item A3.4.1 & A3.4.2	%	12 000		
		Cable detection services				
A3.4.3		Supply, use and hire specialised equipment (ground penetration radar) to detect existing bulk supply and distribution underground cable routing around the existing electrical sub-station, at 10.0 intervals across the entire work areas footprint prior to any construction activities. Rate shall include to place 12mm diameter steel pegs and survey of the cable markers. survey data and drawings information to be submitted to the Design Engineer to correlate all design information. the costs shall include all arrangements and coordination with specialist sub-contractor to provide information requested.	Prov. Sum	1	75 000	75 000
A3.4.4		Overheads, charges and profit on item A3.4.3	%	75 000		
A3.5	PSA 8.5.1	**Landscaping**				
A3.5.1		Remove and relocate existing landscaping	Prov. Sum	1	105 000	105 000
A3.5.2		Overheads, charges and profit on item A3.5.1	%	105 000		
A3.5.3		New landscaping	Prov. Sum	1	650 000	650 000

ITEM NO	PAYMENT	DESCRIPTION	UNIT	QTY	RATE (incl. VAT)	Amount (incl. VAT)
Brought Forward						
A3.5.4		Overheads, charges and profit on item A3.5.1	%	650 000		
A4	8.7	**DAYWORKS**				
A4.1		**Labour**				
		Supply labour including all costs				
A4.1.1		Site Foreman	h	40		
A4.1.2		Skilled	h	60		
A4.1.3		Semi-Skilled	h	60		
A4.1.4		Unskilled	h	100		
A4.1.5		Flag Person	h	80		
A4.2		**Plant**				
		Supply plant, incl. operator, fuel and other costs for:				
A4.2.1		Front-end Loader: min 2m³ bucket	h	80		
A4.2.2		Excavator: min 100kW	h	70		
A4.2.3		TL Back actor: min 50kW	h	30		
A4.2.4		Vibration self-propelled roller - 7 ton	h	25		
A4.2.5		Water cart: min 10 000 litres	h	25		
A4.2.6		Bakkie: min 1 ton	h	50		
A4.2.7		Tip truck: min 10 ton	h	25		
A4.2.8		Compressor including hammers & hoses (7m³/min)	h	25		
A4.2.9		Centrifugal pump: 100mm	h	50		
A4.2.10		Grader: 100kW	h	65		
A5		**TEMPORARY WORKS**				
A5.1	PSA 8.8.2	**Accommodation of traffic**				

STELLENBOSCH
STELLENBOSCH • PNIEL • FRANSCHHOEK
MUNISIPALITEIT • UMASIPALA • MUNICIPALITY

ITEM NO	PAYMENT	DESCRIPTION	UNIT	QTY	RATE (incl. VAT)	Amount (incl. VAT)
Brought Forward						
A5.1.1		Accommodation of traffic for the construction of Phase 1 as shown in DWG 34092.00-119-01				
A5.1.1.1		Establishment (Fixed charges)	Sum	1		
A5.1.1.2		Time-related charges (Period to be stated by Contractor)	Sum	1		
A5.1.2		Accommodation of traffic for the construction of Phase 2 as shown in DWG 34092.00-119-01 and DWG 34092.00-119-02				
A5.1.2.1		Establishment (Fixed charges)	Sum	1		
A5.1.2.2		Time-related charges (Period to be stated by Contractor)	Sum	1		
A5.1.3		Accommodation of traffic for the construction of Phase 3 as shown in DWG 34092.00-119-02				
A5.1.3.1		Establishment (Fixed charges)	Sum	1		
A5.1.3.2		Time-related charges (Period to be stated by Contractor)	Sum	1		
A5.1.4		Traffic accommodation for the removal and painting of road markings				
A5.1.4.1		Establishment (Fixed charges)	Sum	1		
A5.1.4.2		Time-related charges (Period to be stated by Contractor)	Sum	1		
A5.2	8.7	**Temporary Traffic Signs**				
		Extra-over Item A5.1 for supply, install, maintain and remove temporary traffic signs where ordered by the Engineer additional to those required in terms of the minimum requirements:				
A5.2.1		Delineators (DTG50J) Single	No	20		
A5.2.2		Portable stop and Go-Ry signs	No	2		
A5.2.3		Roads signs, R and TR series	No	5		
A5.2.4		Roads signs, TW series	No	5		
A5.2.5		Traffic cones	No	10		

STELLENBOSCH
STELLENBOSCH • PNIEL • FRANSCHHOEK
MUNISIPALITEIT • UMASIPALA • MUNICIPALITY

ITEM NO	PAYMENT	DESCRIPTION	UNIT	QTY	RATE (incl. VAT)	Amount (incl. VAT)
Brought Forward						
A5.2.6		Supply, Deliver, Establish and maintain moveable plastic barriers (filled with water) on site.	m	50		
A5.2.7		Supply, Deliver, Establish and maintain concrete 2.3m New Jersey Barriers on site (Painted white with PVA).	m	30		
A5.2.8		Supply, Deliver, Establish, maintain and hand-over to Employer at the conclusion of the Contract, concrete jersey barriers on site (Painted white with PVA).	m	25		
A5.3		**Existing Services**				
A5.3.1	PSA 8.8.4	Dealing with existing services	Sum	1		
A5.3.2	PSA 8.12 (a)	Locating, protection, alteration and relocation of existing services carried out by others.	Prov. Sum	1	75 000	75 000
A5.3.3	PSA 8.12 (b)	Overheads charges and profit on item A5.3.2	%	75 000		
Total Carried Forward To Summary						

STELLENBOSCH
STELLENBOSCH • PNIEL • FRANSCHHOEK
MUNISIPALITEIT • UMASIPALA • MUNICIPALITY

BILL OF QUANTITIES
BILL 1: CIVIL

SECTION B: SITE CLEARANCE

ITEM NO	PAYMENT	DESCRIPTION	UNIT	QTY	RATE (incl. VAT)	Amount (INCL. VAT)
B	SANS1200 C	**SITE CLEARANCE GENERAL**				
B1.1	PSC 8.2.1	Clear and grub site including trees up to 1m girth and boulders up to 0,15m³	ha	6		
B1.2	PSC 8.2.8	Demolish and remove to an approved dump site identified by the Contractor, including haulage for:				
B1.2.1		Rubble	m³	50		
B1.2.2		Kerbing and channelling	m	200		
B1.2.3		Extra over item B1.2.2 for neat cutting of edges along the road interface.	m	200		
B1.2.4		Road studs	No	10		
B1.2.5		Clay pavers	m²	110		
B1.3		Remove and store for reuse:				
B1.3.1		Kerbing and channelling	m	150		
B1.3.2		Extra over item B1.3.1 for neat cutting of edges along the road interfaces.	m	150		
B1.3.3		Clay pavers	m²	160		
B2		**ROAD SIGNAGE**				
B2.1	PSMM 8.3.7	Remove road signage including posts and base to an approved dump site identified by the Contractor, including haulage for:				
B2.1.1		R218	No			Rate Only
B2.1.2		TW413+TIN11.4	No	1		
B2.2	PSMM 8.3.7	Remove road signage including posts and base, store road sign faces for reuse and reinstatement, dispose of posts and base to an approved dump site identified by the Contractor, including haulage for:				
B2.2.1		R103	No	1		
B2.2.2		R201-60	No	1		
B2.2.3		W301	No	1		

ITEM NO	PAYMENT	DESCRIPTION	UNIT	QTY	RATE (incl. VAT)	Amount (incl. VAT)
Brought Forward						
B2.2.4		W401	No	3		
B2.3	PSC 8.2.12	Remove road sign boards including posts and base, store board faces for reuse and reinstatement, dispose of posts and base to an approved dump site identified by the Contractor, including haulage, where the sign board area is:				
B2.3.1		Exceeding 2m² but not 10m²	No	5		
B3		**ROAD MARKINGS**				
B3.1	PSC8.2.11	Remove existing road markings by means of sand-blasting:				
		a) Lines (Broken and unbroken):				
B3.1.1		100-150mm wide	m	600		
B3.1.2		151-300mm wide	m	350		
		b) Characters and symbols:				
B3.1.3		Painted island (RM5)	m²	200		
B3.1.4		Arrows (Directional, bifurcation, lane reduction, etc.)	m²	30		
B3.2	PSC8.2.12	Paint existing road marking matte black as an interim measure until the removal of the existing road layerworks:				
		a) Lines (Broken and unbroken):				
B3.2.1		100-150mm wide	m	50		
B3.2.2		151-300mm wide	m	40		
		b) Characters and symbols:				
B3.2.3		Arrows (Directional, bifurcation, lane reduction, etc.)	m²	6		
B4		**EXISTING ROAD LAYERWORKS**				
B4.1	PSC8.2.13	Remove existing road surfacing by milling (or other methodology approved by Engineer) and spoil to a legal dump site identified by the Contractor, including haulage for:				
B4.1.1		Existing asphalt up to 40mm thick	m²	825		

ITEM NO	PAYMENT	DESCRIPTION	UNIT	QTY	RATE (incl. VAT)	Amount (incl. VAT)
Brought Forward						
B4.1.2	PSC8.2.14	Extra over item B4.1.1 for neat cutting of edges	m	180		
B4.2	PSC8.2.13	Excavate and remove existing road layerworks and spoil to a legal dump site identified by the Contractor, including haulage for:				
B4.2.1		Existing BTB layer up to 120mm thick	m³	120		
B4.2.2		Existing G2 layer up to 150mm thick	m³	120		
B4.2.3		Existing cement stabilised subbase layer up to 200mm thick	m³	75		
B4.3	PSC8.2.13	Excavate and remove existing road layerworks and stockpile identified by the Engineer, including haulage for:				
B4.3.1		Existing BTB layer up to 120mm thick	m³	137		
B4.3.2		Existing G2 layer up to 150mm thick	m³	338		
B4.3.3		Existing cement stabilised subbase layer up to 300mm thick	m³	630		
B5		**FENCING**				
B5.1		Remove, store and reinstate existing wire fencing	m	100		
B5.2		Supply, deliver and maintain for construction period temporary construction hoarding fence (Ready panels) covered with shade cloth (3.0m long by 1.8m high), along works areas as ordered on written instruction by Engineer.	m	1250		
B6		**OTHER SERVICES**				
B6.1	SANS 1200C 8.2.7	Dismantle and remove existing irrigation pipes and specials and dispose material at approved spoil site identified by Contractor, including haulage.	m	200		
B6.2		Relocate existing irrigation pipes and specials to outside of new road extent as ordered by the Engineer	m	200		
B6.3		Hand excavate for existing irrigation pipe and dispose material at approved spoil site identified by Contractor, including haulage.	m³	35		
Total Carried Forward To Summary						

STELLENBOSCH
STELLENBOSCH • PNIEL • FRANSCHHOEK
MUNISIPALITEIT • UMASIPALA • MUNICIPALITY

BILL OF QUANTITIES
BILL 1: CIVIL

SECTION C: EARTHWORKS

ITEM NO	PAYMENT	DESCRIPTION	UNIT	QTY	RATE (incl. VAT)	Amount (incl. VAT)
C1	SANS1200 D	**EARTHWORKS**				
C1.1	8.3.2 (a)	Cut to fill within road reserve, compacted to 90% MOD AASHTO maximum density (100% for sand)	m³	500		
C1.2		Cut from stockpile to fill within road reserve, compacted to 90% MOD AASHTO maximum density (100% for sand)	m³	350		
C2	SANS 1200DM	**EARTHWORKS (ROADS, SUBGRADE)**				
C2.1		**Treatment of Road Bed**				
C2.1.1	8.3.3 (a)	Road-bed preparation and compaction of in-situ material to 90% MOD AASHTO maximum density (100% for sand) to 200mm depth	m²	1450		
C2.1.2	8.3.3 (a)	Road-bed preparation and compaction of in-situ material to 93% MOD AASHTO maximum density (100% for sand) to 200mm depth	m²	3950		
C2.1.3	8.3.4 (b)	200mm Rockfill from commercial sources, process and compact to create drainage layer where ordered by the Engineer	m³	329		
C2.1.4		Supply and place Geotextile A10 as per manufacturers specification	m²	5530		
C2.2	8.3.4 (a)	**Cut to Fill**				
C2.2.1		Compacted to 93% MOD AASHTO maximum density (100% for sand) within road box cut:	m³	250		
C2.3		**Selected Layer**				
C2.3.1	8.3.5	Construct G6 selected layer up to 150mm compacted to 95% MOD AASHTO maximum density (100% for sand) from:				
C2.3.1.1		Commercial Sources (including haulage)	m³	800		
C2.3.2	8.3.5	Construct G7 selected layer up to 300mm compacted to 93% MOD AASHTO maximum density (100% for sand) from:				

STELLENBOSCH
STELLENBOSCH • PNIEL • FRANSCHHOEK
MUNISIPALITEIT • UMASIPALA • MUNICIPALITY

ITEM NO	PAYMENT	DESCRIPTION	UNIT	QTY	RATE (incl. VAT)	Amount (incl. VAT)
Brought Forward						
C2.3.2.1		Commercial Sources (including haulage)	m³	550		
C2.3.2.2		Other excavations on site	m³	250		
C2.3.3	8.3.5	Construct G8 selected layer up to 300mm compacted to 93% MOD AASHTO maximum density (100% for sand) from:				
C2.3.3.1		Stockpile (including haulage)	m³	325		
C2.3.3.2		Other excavations on site	m³	425		
C2.3.4	PSDM 8.3.18	Extra over item C2.3.1, C2.3.2 and C2.3.3 for the removal of unsuitable material:				
C2.3.4.1		0m² - 200m²	m³	235		
C2.3.4.2		200m² - 400m²	m³	450		
C2.4		**Cut to Stockpile**				
C2.4.1		Soft excavation to a stockpile as identified by the Engineer within freehaul distance	m³	1511		
C2.5	PSDM 8.3.7	**Cut to Spoil**				
C2.5.1	8.3.7 (a)	Soft excavation to a legal dump site identified by the Contractor, including haulage.	m³	756		
C2.5.2		Soft excavation to a stockpile identified by the Engineer, including haulage.	m³	265		
C2.6	8.3.6	Extra over items C2.2, C2.4 and C2.5 for:				
C2.6.1	8.3.6 (a)	Intermediate excavation	m³	500		
C2.6.2	8.3.6 (b)	Hard Rock excavation	m³	150		
C2.7	PSDM 8.11	Extra-over items C2.2, C2.4 and C2.5 for temporary stockpiling of material on written instruction from Engineer only.	m³	200		
C2.8	PSDM 8.3.17	Trial holes up to 2,0m deep	No	18		

ITEM NO	PAYMENT	DESCRIPTION	UNIT	QTY	RATE (incl. VAT)	Amount (incl. VAT)
Brought Forward						
C3		**SURFACE FINISHES**				
C3.1	PSDM 8.3.19	Shaping in verges and median	m²	5625		
C3.2	PSDM 8.3.20	Straw stabilizing of verges and median	m²	563		
Total Carried Forward To Summary						

STELLENBOSCH
STELLENBOSCH • PNIEL • FRANSCHHOEK
MUNISIPALITEIT • UMASIPALA • MUNICIPALITY

BILL OF QUANTITIES
BILL 1: CIVIL

SECTION D: CABLE DUCTS

ITEM NO	PAYMENT	DESCRIPTION	UNIT	QTY	RATE (incl. VAT)	Amount (incl. VAT)
D	SANS 1200DB	**CABLE DUCTS**				
D1	8.3.2	**EXCAVATION**				
	PSDB 8.3.2 (a)	Excavate in all materials for trenches, select, backfill, compact and dispose of all surplus material for main pipes with:				
D1.1		**Ducts trenches (up to 160mm dia ducts)**				
D1.1.1		Single duct road crossings up to 1.0m deep	m	280		
D1.1.2		2 X duct road crossing up to 1.0m deep	m	450		
D1.1.3		4 X duct road crossing up to 1.0m deep	m	10		
D1.1.4		6 X duct road crossing up to 1.0m deep as per detail "E-Type" on dwg. 34092.00-104-01	m	110		
D1.1.5		10 X duct road crossing up to 1.0m deep as per detail "G-Type" on dwg. 34092.00-104-01	m	40		
D1.2	8.3.2 (b)	Extra-over item D1.1 for:				
D1.2.1		Intermediate excavation	m³	10		
D1.3	PSDB 8.3.2 (c)	Excavate and dispose of unsuitable material from trench bottom	m³	5		
D2	8.3.3	**EXCAVATION ANCILLARIES**				
D2.1		Make up deficiency in backfill material				
D2.1.1	8.3.3.1 (a)	From other excavations on site	m³	65		
D2.1.2	8.3.3.1 (c)	From commercial sources including haulage	m³	15		
D2.2	PSDB 8.3.3.3	Compaction in road reserves, parking areas and walkways	m³	80		
D2.3	PSDB 8.6	Disposal of surplus or unsuitable materials from trench excavations from site to an approved spoil site identified by the Contractor, including haulage	m³	5		

STELLENBOSCH
STELLENBOSCH • PNIEL • FRANSCHHOEK
MUNISIPALITEIT • UMASIPALA • MUNICIPALITY

ITEM NO	PAYMENT	DESCRIPTION	UNIT	QTY	RATE (incl. VAT)	Amount (incl. VAT)
Brought Forward						
D3	PSDB 8.3.5	**EXISTING SERVICES THAT INTERSECT OR ADJOIN A PIPE TRENCH**				
D3.1		**a) Services that intersect a trench**				
D3.1.1		i) Overhead Electrical cables	No	2		
D3.1.2		ii) Underground Electrical cables	No	8		
D3.1.3		iii) Telecommunication cables	No	20		
D3.1.4		iv) Water	No	2		
D3.1.5		v) Treated Effluent & Irrigation pipes	No	5		
D3.1.6		vi) Ducts	No	15		
D3.1.7		vii) Sub-Soil drains	No	8		
D3.2		**b) Services that adjoin a trench**				
D3.2.1		i) Underground Electrical cables	m	20		
D3.2.2		ii) Telecommunication cables	m	30		
D3.2.3		iii) Water pipes	m	10		
D3.2.4		iv) Treated Effluent & Irrigation pipes	m	15		
D3.2.5		v) Ducts	m	100		
D3.2.6		vi) Sub-Soil drains	m	40		
D3.3		Excavate by hand in soft material to expose existing services, inclusive of reinstatement.	m³	150		
D4	SANS 1200LB	**BEDDING (PIPES)**				
	8.2.1	Provision of bedding material compacted to 93% of MOD AASHTO density (100% for sand) with material from:				
D4.1		**From trench excavations on site**				
D4.1.1		a) Selected granular material	m³	310		
D4.1.2		b) Selected fill material	m³	590		
D4.2		**From borrow pit/stockpile, including haulage**				

ITEM NO	PAYMENT	DESCRIPTION	UNIT	QTY	RATE (incl. VAT)	Amount (incl. VAT)
Brought Forward						
D4.2.1		a) Selected granular material	m³	280		
D4.2.2		b) Selected fill material	m³	545		
D5	SANS 1200LC	**CABLE DUCTS**				
D5.1	8.2.5	Supply, lay, bed and seal ends of electrical ducts, including draw wires for:				
D5.1.1		110mm dia. Class 400 uPVC pipes	m	215		
D5.1.2		160mm dia. Class 400 uPVC pipes	m	625		
D5.1.3		160mm dia. Split sleeve ducts	m	85		
D5.2		Supply, lay, bed and seal ends of communication ducts, including draw wire for:				
D5.2.1		110mm dia pipes HDPE double walled corrugated pipe	m	938		
D5.3		Supply, lay, bed and seal ends of irrigation ducts, including draw wires for:				
D5.3.1		110mm dia. Class 34 uPVC pipes	m	120		
D5.4		Supply, lay, bed and seal ends of signalisation ducts, including draw wires for:				
D5.4.1		160mm dia pipes HDPE double walled corrugated pipe	m	20		
D5.4.2		160mm dia. Split sleeve ducts	m	20		
D5.5		Supply, lay, and bed for bends ducts, joint, including cut ducts to lengths where required:				
D5.5.1		160mm dia 11.25 deg	No	6		
D5.5.2		160mm dia 22.5 deg	No	8		
D5.5.3		160mm dia 45 deg	No	4		
D5.6	8.2.5	Supply, Lay, bed and seal ends of communication ducts				
D5.6.1		110mm dia. Cable Flex pipes	m	1360		

STELLENBOSCH
STELLENBOSCH • PNIEL • FRANSCHHOEK
MUNISIPALITEIT • UMASIPALA • MUNICIPALITY

ITEM NO	PAYMENT	DESCRIPTION	UNIT	QTY	RATE (incl. VAT)	Amount (incl. VAT)
Brought Forward						
D5.7.	8.2.5	Supply, Lay, bed and seal ends of Fibre ducts (Direct bury), supplied by Others for:				
D5.7.1		7-Way Fibre core duct	m	475		
D5.8	SANS 1200C 8.2.7	Dismantle and remove existing ducts and dispose material at approved spoil site identified by Contractor, including haulage, for pipe diameter up to:				
D5.8.1		160mm dia	m	35		
D5.9		Hand excavate for existing ducts and dispose material at approved spoil site identified by Contractor, including haulage.	m^3	30		
D6	SANS 1200LC 8.2.7	**MANHOLES**				
D6.1		Supply and install brick built telecommunication AJB with medium duty cover and frame as per detail on DWG 34092.00-104-01 (230mm brick wall):				
D6.1.1		600 x 600 mm with AKSESS 700 cover	No	6		
D6.2		Assemble and install fibre manhole (supplied by others) to Drg 34092.00-104-02.				
D6.2.1		RHI-Node 600 Smartlock	No	4		
D6.3		Connect to existing ducts	No	6		
D6.4	SANS1200 C 8.2.8	Demolish existing telecommunication AJB and dispose material at approved spoil site identified by Contractor, including haulage.	No	2		
D6.5		Hand excavate for existing manhole and dispose material at approved spoil site identified by Contractor, including haulage.	m^3	12		
Total Carried Forward To Summary						

STELLENBOSCH
STELLENBOSCH • PNIEL • FRANSCHHOEK
MUNISIPALITEIT • UMASIPALA • MUNICIPALITY

BILL OF QUANTITIES
BILL 1: CIVIL

SECTION E: STORMWATER (ROAD DRAINAGE)

ITEM NO	PAYMENT	DESCRIPTION	UNIT	QTY	RATE (incl. VAT)	Amount (incl. VAT)
E	SANS 1200DB	**STORMWATER (ROAD DRAINAGE)**				
E1	8.3.2	**EXCAVATION**				
E1.1	PSDB 8.3.2 (a)	Excavate in all materials for trenches, select, backfill, compact and dispose of all surplus material for concrete stormwater pipes with:				
		Dia up to 375mm for depths:				
		Over and Up to				
E1.1.1		0,5 m 1,5 m	m	10		
E1.1.2		1,5 m 2,5 m	m	15		
		Dia from 375mm up to 600mm for depths:				
		Over and Up to				
E1.1.3		0,5 m 1,5 m	m	15		
E1.1.4		1,5 m 2,5 m	m	30		
E1.1.5		2,5 m 3,5 m	m	15		
E1.2	PSDB 8.3.2 (a)	Excavate in all materials for trenches, select, backfill, compact and dispose of all surplus material for sub-soil drains with:				
		Dia up to 110mm for depths:				
		Over and Up to				
E1.2.1		0,5 m 1,5 m	m	850		
E1.3	8.3.2 (b)	Extra over for items E1.1 to E1.2				
E1.3.1		Intermediate excavation	m³	100		
E1.3.2		Hard excavation	m³	35		
E1.4	8.3.2 (c)	Excavate unsuitable material from trench bottom	m³	40		
E1.5		Excavate by hand in soft material to expose existing services	m³	50		

STELLENBOSCH
STELLENBOSCH • PNIEL • FRANSCHHOEK
MUNISIPALITEIT • UMASIPALA • MUNICIPALITY

ITEM NO	PAYMENT	DESCRIPTION	UNIT	QTY	RATE (incl. VAT)	Amount (incl. VAT)
Brought Forward						
E2		**EXCAVATION ANCILLARIES**				
E2.1		Make up deficiency in backfill material:				
E2.1.1	8.3.3.1 (a)	From other excavations on site	m³	100		
E2.1.2	8.3.3.1 (b)	From stockpile, including haulage	m³	75		
E2.2	PSDB 8.3.3.3	Compaction in road reserves, parking areas and walkways (layers of 150mm thickness).	m³	125		
E2.3	PSDB 8.6	Disposal of surplus or unsuitable materials from trench excavations from site to an approved spoil site identified by Contractor, including haulage.	m³	100		
E3	SANS 1200LE	**PIPES**				
E3.1	8.2.1	Supply, handle and lay, spigot & socket type concrete pipes on a class C bedding				
E3.1.1		300mm dia D100	m	10		
E3.1.2		375mm dia D100	m	35		
E3.1.3		450mm dia D100	m	10		
E3.1.4		525mm dia D100	m	15		
E3.1.5		600mm dia D100	m			Rate Only
E3.2	PSLE 8.2.16 (a)	Extra-over Item E3.1 for connecting to existing manhole	No.	4		
E3.3	PSLE 8.2.16 (b)	Extra-over Item E3.1 for connecting new pipe to existing pipe	No.	2		
E3.4	SANS 1200C 8.2.7	Dismantle and remove existing concrete pipes and dispose material at approved spoil site identified by Contractor, including haulage, for pipe diameter:				
E3.4.1		300mm dia	m	35		
E3.4.2		450mm dia	m	20		
E3.4.3		525mm dia	m	10		
E3.4.4		600mm dia	m			Rate Only

ITEM NO	PAYMENT	DESCRIPTION	UNIT	QTY	RATE (incl. VAT)	Amount (incl. VAT)
Brought Forward						
E3.5		Relay existing concrete pipe to new specified slope on Class C bedding	m	10		
E3.6		Hand excavate for existing pipes and dispose material at approved spoil site identified by Contractor, including haulage.	m³	10		
E4	SANS 1200LB	**BEDDING (PIPES)**				
E4.1	8.2.1	Provision of bedding material compacted to 93% of MOD AASHTO density (100% for sand) with material from: From other excavations on site				
E4.1.1		a) Selected granular material	m³	15		
E4.1.2		b) Selected fill material	m³	20		
		From commercial sources				
E4.1.3		a) Selected granular material	m³	20		
E4.1.4		b) Selected fill material	m³	35		
E5	PSLE 8.2.8	**MANHOLES**				
E5.1		Supply and install complete manholes:				
E5.1.1		a) 750mm Subsoil Manholes with SABS EN124 D400 heavy duty hinged ductile iron covers and frames complete to DWG 34092.00-123-01 for depths:				
		Over and Up to				
E5.1.1.1		0,5 m 1,5 m	No.	4		
E5.1.2		b) 1000mm Manholes (Fibre cement shafts) with SABS EN124 D400 heavy duty hinged ductile iron covers and frames complete to DWG 34092.00-123-01 for depths:				
		Over and Up to				
E5.1.2.1		0,5 m 1,5 m	No.	1		
E5.1.2.2		1,5 m 2,5 m	No.	2		

STELLENBOSCH
STELLENBOSCH • PNIEL • FRANSCHHOEK
MUNISIPALITEIT • UMASIPALA • MUNICIPALITY

ITEM NO	PAYMENT	DESCRIPTION	UNIT	QTY	RATE (incl. VAT)	Amount (incl. VAT)
Brought Forward						
E5.1.3		c) 1250mm Manholes with SABS EN124 D400 heavy duty hinged ductile iron covers and frames complete to DWG 34092.00-123-01 for depths:				
		Over and Up to				
E5.1.3.1		1,5 m 2,5 m	No.	1		
E5.2		Extra over item E5.1 for Special Type H/S access lid (City of Cape Town Standard Concrete Infill Manhole cover and frame to SANS 50124 Class D400)	No.	4		
E5.3	SANS 1200C 8.2.8	Demolish existing manhole and dispose material at approved spoil site identified by Contractor, including haulage, for manhole depths:				
		Over and Up to				
E5.3.1		0,5 m 1,5 m	No.	1		
E5.3.2		1,5 m 2,5 m	No.	1		
E5.4	SANS 1200LE 8.2.13	Raise or Lower existing manholes and make good to match design cover levels, dispose excess material at approved spoil site identified by contractor, including haulage, for depths:				
		Over and Up to				
E5.4.1		0,0 m 0,5 m	No.	3		
E5.5		Hand excavate for existing manhole and dispose material at approved spoil site identified by Contractor, including haulage.	m³	20		
E6		**CATCHPITS**				
E6.1		Supply and install double grid kerb inlet catchpit complete to DWG 34092.00-123-01 for depths:				
		Over and Up to				
E6.1.1		0,5 m 1,5 m	No.	5		
E6.2		Supply and install dual double grid kerb inlet catchpit complete to DWG 34092.00 for depths:				

STELLENBOSCH
STELLENBOSCH • PNIEL • FRANSCHHOEK
MUNISIPALITEIT • UMASIPALA • MUNICIPALITY

ITEM NO	PAYMENT	DESCRIPTION	UNIT	QTY	RATE (incl. VAT)	Amount (incl. VAT)
Brought Forward						
		Over and Up to				
E6.2.1		0,5 m 1,5 m	No.	2		
E6.3		Supply and install double grid catchpit (Field Inlet) complete to DWG WCS/23/3/C3, C6 and C7 for depths:				
		Over and Up to				
E6.3.1		0,5 m 1,5 m	No.	1		
E6.4	SANS 1200C 8.2.8	Demolish existing catchpits and dispose material at approved spoil site identified by Contractor, including haulage, for catchpit depths:				
		Over and Up to				
E6.4.1		0,5 m 1,5 m	No.	5		
E6.5		Hand excavate for existing catchpit and dispose material at approved spoil site identified by Contractor, including haulage.	m³	15		
E7		**SUBSURFACE DRAINS**				
E7.1	PSLE 8.2.14	Supply and install subsurface drains to DWG 34092.00-121-01 "subsoil drain typical for roadway, complete with pipe, stone, geotextile and sand fill for:				
E7.1.1		Subsurface drains located alongside road layerworks	m	850		
E7.1.2		Subsurface drains located alongside the road layerworks	m	250		
E7.2	PSLE 8.2.15	Connecting subsurface drains to new manholes, catchpits, etc	No.	6		
E7.3		Supply and install subsurface drain rodding eyes complete with structure, cover and frame, as per DWG 34092.00-121-01	No.	6		
E7.4		Excavate, relocate and make good existing subsurface drains as shown in DWG 34092.00-121-01	m	135		
E7.5		Excavate and remove existing subsurface drains and dispose material at approved spoil site identified by Contractor, including haulage.	m	45		

ITEM NO	PAYMENT	DESCRIPTION	UNIT	QTY	RATE (incl. VAT)	Amount (incl. VAT)
Brought Forward						
E8		**STORMWATER ANCILLARIES**				
E8.1		Cleaning of existing stormwater structure and removal of all debris and silt. Rate shall include the disposal of all materials at an approved and registered dump facility.				
E8.1.1		For pipes between 450mm dia. up to 900mm dia.	m	85		
E8.2	PSLE 8.2.16 (b)	Tie into existing manhole including benching for depth:				
		Over and Up to				
E8.2.1		1,5 m 2,5 m	No.	2		
E8.3	SANS 1200LE 8.2.11	Supply and install anchor blocks	m³	5		
E9		**STORMWATER SIDE DRAINS**				
E9.1		**Cut to fill**				
E9.1.1	SANS 1200D 8.3.2	a) Compacted to 93% MOD AASHTO maximum density (100% for sand)	m³	85		
E9.2	PSDM 8.3.7	**Cut to spoil**				
E9.2.1		a) Soft excavation to a dump site identified by the Contractor including haulage.	m³	50		
E9.3	PSDM 8.3.7	**Cut to Stockpile**				
E9.3.1		Cut to stockpile in stormwater side drain, including haulage	m³	15		
E9.4		Extra-over Items E9.2.1 & E9.3.1 inclusive for excavation in:				
E9.4.1		Intermediate material	m³	20		
E9.5		Extra-over Items E9.1, E9.2 & E9.3 for trimming of embankments to specified invert, slopes and levels; and compaction in soft excavation, as per DWG 34092.00-120-01 & 34092.00-123-01.	m²	425		

STELLENBOSCH
STELLENBOSCH • PNIEL • FRANSCHHOEK
MUNISIPALITEIT • UMASIPALA • MUNICIPALITY

ITEM NO	PAYMENT	DESCRIPTION	UNIT	QTY	RATE (incl. VAT)	Amount (incl. VAT)
Brought Forward						
E9.6		**Surface bed Preparation**				
E9.6.1	8.3.4	Imported G5 fill material compacted to 95% MOD AASHTO under stormwater channel to 150mm thick	m³	165		
E9.7	SANS 1200DK	**Stormwater Side Drain Lining**				
E9.7.1		Supply and place Armorflex 180 where shown on the drawings (Inclusive of the installation of 50mm sand, Geotextile A4 material under Amorflex and tie wires as per manufacturer's specifications)	m²	50		
E9.7.1.1		Extra-over Item E9.7.1 for gravel infill into Armorflex voids (Cement stabilised soil fill, ration of 1:3 minimum), washed into voids.	m³	12		
E9.7.2		Supply and place erosion protection soil saver/ geo jute (or similar), inclusive of anchor trenches as indicated on DWG 34092.00-123-01	m²	500		
E9.7.3		Supply and hydroseed stormwater side drain embankments	m²	3000		
E9.8		Supply, excavate for and install subsurface drains alongside stormwater side drain complete with pipe, stone and geotextile, as per DWG 34092.00-123-01 detail "Typical cross-section stormwater side drain"	m			Rate Only
E9.9	8.2.5	Supply all materials and install stone pitching with round stones of 100mm diameter in concrete mortar, inclusive of backing for pitching	m²	5		
Total Carried Forward To Summary						

STELLENBOSCH
STELLENBOSCH • PNIEL • FRANSCHHOEK
MUNISIPALITEIT • UMASIPALA • MUNICIPALITY

BILL OF QUANTITIES
BILL 1: CIVIL

SECTION F: BULK STORMWATER

ITEM NO	PAYMENT	DESCRIPTION	UNIT	QTY	RATE (incl. VAT)	Amount (incl. VAT)
F	SANS 1200DB	**BULK STORMWATER**				
F1	8.3.2	**EXCAVATION**				
F1.1	PSDB 8.3.2 (a)	Excavate in all materials for trenches, select, backfill, compact and dispose of all surplus material for concrete stormwater pipes with: Dia 750mm up to and including 1050mm, for depths: Over and Up to				
F1.1.1		1,5 m 2,5 m	m	95		
F1.2	8.3.2 (b)	Extra over for items F1.1				
F1.2.1		Intermediate excavation	m³	50		
F1.2.2		Hard rock excavation	m³	20		
F1.3	8.3.3 (c)	Excavate and dispose of unsuitable material from trench bottom to an approved spoil site identified by Contractor, including haulage.	m³	20		
F1.4	PSDB 8.4	Excavate by hand in soft material to expose existing services.	m³	80		
F2		**EXCAVATION ANCILLARIES** Make up deficiency in backfill material:				
F2.1	8.3.3.1 (a)	From other excavations on site	m³	45		
F2.2	8.3.3.1 (c)	From commercial sources	m³	25		
F2.3	PSDB 8.3.3.3	Compaction in road reserves, parking areas and walkways (layers of 15mm thick).	m³	30		
F2.4	PSDB 8.6	Disposal of surplus or unsuitable materials from trench excavations from site to an approved spoil site identified by Contractor, including haulage.	m³	50		
F3		**LATERAL SUPPORT**				

STELLENBOSCH
STELLENBOSCH • PNIEL • FRANSCHHOEK
MUNISIPALITEIT • UMASIPALA • MUNICIPALITY

ITEM NO	PAYMENT	DESCRIPTION	UNIT	QTY	RATE (incl. VAT)	Amount (incl. VAT)
Brought Forward						
F3.1	PSDB 8.3.4 (a)	Supply, install, maintain and remove lateral support for both sidewalls of trenches in restricted areas. Inclusive of battering of sides, spoiling unsuitable material from battered slope and replacing it with suitable material.				
		Over and Up to				
F3.1.1		1,5 m 2,5 m	m	95		
F3.2	PSDB 8.3.4 (b)	Extra over item F3.1 for dewatering trenches	m	95		
F4	SANS 1200LB	**BEDDING (PIPES)**				
		Provision of bedding material compacted to 93% of MOD AASHTO density (100% for sand) with material				
F4.1		**From trench excavation:**				
F4.1.1	8.2.1 (a)	Selected granular material	m³	10		
F4.1.2	8.2.1 (b)	Selected fill material	m³	15		
F4.2		**From commercial sources:**				
F4.2.1	8.2.2.3 (a)	Selected granular material	m³	15		
F4.2.2	8.2.2.3 (b)	Selected fill material	m³	35		
F4.3	PSLB 8.2.6	Bedding for waterlogged condition: Supply and place 19mm crushed stone from commercial sources.	m³	30		
F4.4	PSLB 8.2.7	Supply and place geotextile (A5 or similar) as required for waterlogged trenches.	m²	400		
F5	SANS 1200LE	**PIPES**				
	8.2.1	Supply, handle and lay, spigot & socket type concrete pipes on a class C bedding:				
F5.1		900mm dia D100	m	95		
F6	PSLE 8.2.8	**MANHOLES**				
		Supply and install complete manholes, including all accessories:				

STELLENBOSCH
STELLENBOSCH • PNIEL • FRANSCHHOEK
MUNISIPALITEIT • UMASIPALA • MUNICIPALITY

ITEM NO	PAYMENT	DESCRIPTION	UNIT	QTY	RATE (incl. VAT)	Amount (incl. VAT)
Brought Forward						
F6.1		Construct reinforced concrete stormwater manhole on 900mm dia pipe, complete to detail "Typical Stormwater Manhole in areas with perched water table" in DWG 34092.00-123-01, inclusive of reinforcement steel and all shown accessories for depths:				
		Over and Up to				
F6.1.1		2,5 m 3,5 m	No.	2		
		STORMWATER ANCILLARIES				
F6.2		Supply and install new stormwater headwall structure complete with reinforcement to details in DWG 34092.00-121-02 for headwall heights:				
F6.2.1		Not exceeding 1 200mm	No.	1		
F6.2.2		Hand excavate for existing headwall and dispose material at approved spoil site identified by Contractor, including haulage.	m³	25		
F7		**MISCELLANEOUS**				
F7.1		Supply and install brick and mortar infill stub for pipe diameter 900mm (Provisional for temporary works)	No.	2		
F8		**STORMWATER SURFACE FINISHING**				
F8.1		Supply and install Armorflex 180 to stormwater overland escape route inclusive of 50mm sand compacted to 100% MOD AASHTO, geotextile A4 and tie wires as per manufacturer's specification.	m²	10		
F8.2		Extra over Item F8.1 for supply of 100mm G5 Compacted to 95% MOD AASHTO under sand layer.	m³	5		
F8.3		Extra over Item F8.3 for 2% cement/sand infill to Armorflex blocks.	m³	3		
F8.4		Supply and install new Terrafix 120 complete to DWG 34092.00-123-01	m²	40		

STELLENBOSCH
STELLENBOSCH • PNIEL • FRANSCHHOEK
MUNISIPALITEIT • UMASIPALA • MUNICIPALITY

ITEM NO	PAYMENT	DESCRIPTION	UNIT	QTY	RATE (incl. VAT)	Amount (incl. VAT)
Brought Forward						
F8.5		Supply and install new Terraforce (Type L13) retaining blocks complete to DWG 34092.00-123-02. Rate shall include the sub-soil drainage pipe behind the wall as well as the strip foundation (600mm x 200mm) for CL25/19.	m²	15		
Total Carried Forward To Summary						

STELLENBOSCH
STELLENBOSCH • PNIEL • FRANSCHHOEK
MUNISIPALITEIT • UMASIPALA • MUNICIPALITY

BILL OF QUANTITIES
BILL 1: CIVIL

SECTION G: SUBBASE

ITEM NO	PAYMENT	DESCRIPTION	UNIT	QTY	RATE (incl. VAT)	Amount (incl. VAT)
G1	SANS1200 ME	**SUBBASE**				
G1.1	8.3.3	Construct subbase with material from commercial sources:				
G1.1.1		125mm C3 (cement stabilised material) for roads compacted to 97% MOD AASHTO	m³	782		
G1.1.2		150mm C3 (cement stabilised material) for roads compacted to 97% MOD AASHTO	m³			Rate Only
G1.1.3		125mm C4 (cement stabilised material) for paved areas compacted to 97% MOD AASHTO	m³	782		
G1.1.4		100mm G5 for sidewalk compacted to 95% MOD AASHTO	m³	220		
G1.2	8.3.5 (d)	Process sub-base material using 32.5N (sureroad) cement	m³	1564		
G1.3	8.3.8	Stabilizing agent CEM II 32.5 cement (PPC Sureroad) to SAN 50197-1.	t	106		
Total Carried Forward To Summary						

STELLENBOSCH
STELLENBOSCH • PNIEL • FRANSCHHOEK
MUNISIPALITEIT • UMASIPALA • MUNICIPALITY

BILL OF QUANTITIES
BILL 1: CIVIL

SECTION H: KERBING AND CHANNELLING

ITEM NO	PAYMENT	DESCRIPTION	UNIT	QTY	RATE (incl. VAT)	Amount (incl. VAT)
H1	SANS1200 MK	**KERBING AND CHANNELLING**				
	PSMK 8.2.1	Precast concrete kerbs and channels on concrete bedding as per DWG 34092.00-104-01				
H1.1		Install barrier kerbs and channels (Type BK4 + C1) from stockpile				
H1.1.1		Radius > 20 m and Straight	m	100		
H1.2		Supply and install new barrier Kerbs (Type BK2)				
H1.2.1		Radius > 20 m and straight	m	30		
H1.3		Install barrier kerbs (Type BK2) from stockpile				
H1.3.1		Radius > 20 m and straight	m	10		
H1.4		Supply and install new barrier kerbs and channels (Type BK4 + C1)				
H1.4.1		Radius > 20 m and Straight	m	2400		
H1.4.2		Radius < 20 m	m	300		
H1.5		Supply and install new barrier Kerbs (Type BK4)				
H1.5.1		Radius > 20 m and straight	m	750		
H1.5.2		Radius < 20 m	m	170		
H1.6		Supply and install new edging (Type E3)				
H1.6.1		Radius > 20m and straight	m	25		
H1.7		Supply and install new edging (Type E1)				
H1.7.1		Radius > 20m and straight	m	1650		
H1.8	8.2.4	Depressed kerbs (drop kerbs)	m	30		
H1.9		Precast transition kerbs on concrete bedding				
H1.9.1		From barrier kerbs (BK2) to barrier kerbs (BK4)	No.	6		

STELLENBOSCH
STELLENBOSCH • PNIEL • FRANSCHHOEK
MUNISIPALITEIT • UMASIPALA • MUNICIPALITY

ITEM NO	PAYMENT	DESCRIPTION	UNIT	QTY	RATE (incl. VAT)	Amount (incl. VAT)
Brought Forward						
H1.10		In-situ cast transition channel (C1) on concrete bedding	m	5		
H1.11		In-situ cast transition channel (C2) on concrete bedding	m	5		
H2		**SUNDRIES**				
H2.1		Pedestrian crossing ramp, complete as per DWG 34092.00-104-01, including bubble strip panels, concrete surround and dropped kerbs as required	No.	9		
H2.1a		Extra-over for Supply, Deliver and install of Guidance TGSIs (Tail) blocks	No.	45		
H2.2	PSMK 8.3	Name Kerbs	No.	6		
H2.3		Street name plates on 76mm dia hot-dip galvanised poles, wall thickness of 3.5mm:	No.	1		
Total Carried Forward To Summary						

STELLENBOSCH
STELLENBOSCH • PNIEL • FRANSCHHOEK
MUNISIPALITEIT • UMASIPALA • MUNICIPALITY

BILL OF QUANTITIES
BILL 1: CIVIL

SECTION I: BASE

ITEM NO	PAYMENT	DESCRIPTION	UNIT	QTY	RATE (incl. VAT)	Amount (incl. VAT)
I1	SANS1200 MF	**BASE**				
I1.1	8.3.3	Construct base with material from commercial sources compacted to 98% MOD AASHTO density for: **a) Graded crushed stone**				
I1.1.1		150mm Constructed from type G1 material obtained from commercial sources and compacted to 88% af apparent relative density	m³			Rate Only
I1.1.2		150 mm G2 material to streets	m³	721		
I1.1.3		150 mm G3 material to streets	m³			Rate Only
I2		150mm ETB (Emulsion treated base - E1) material to streets compacted to 100% Mod AASTHO Density at 150% CBR.	m³	345		
Total Carried Forward To Summary						

STELLENBOSCH
STELLENBOSCH • PNIEL • FRANSCHHOEK
MUNISIPALITEIT • UMASIPALA • MUNICIPALITY

BILL OF QUANTITIES
BILL 1: CIVIL

SECTION J: ASPHALT BASE AND SURFACING

ITEM NO	PAYMENT	DESCRIPTION	UNIT	QTY	RATE (incl. VAT)	Amount (incl. VAT)
J	SANS 1200MH	**ASPHALT BASE AND SURFACING**				
J1		**PRIME COAT**				
J1.1	8.5.1	Prime coat using:				
J1.1.1		MC30 Cut back (0,7 l/m²)	m²	1000		
J1.1.2		E-Prime (0,8 l/m²)	m²	4930		
J1.2	8.5.5	Variations in quantities of prime:				
J1.2.1		MC30 Cut back	ℓ	150		
J1.2.2		E-Prime	ℓ	50		
J2		**TACK COAT**				
J2.1	8.5.3	Spray surface using emulsion				
J2.1.1		60% Anionic stable grade emulsion diluted with water in a ratio of 1:1 on streets (1 l/m²)	m²	4920		
J3		**ASPHALT SURFACING**				
J3.1	PSMH 8.5.4	**Continuously graded asphalt surfacing using:**				
J3.1.1		a) 50mm on streets compacted to 93% RICE density (A-E2), COLTO Medium Grade	m²			Rate Only
J3.1.2		a) 40mm on streets compacted to 93% RICE density (A-E2), COLTO Medium Grade	m²	4580		
J3.1.3		b) 30mm on sidewalks compacted to 95% Marshall (70/100 Penetration grade), COLTO Fine Grade	m²	1350		
J3.1.4		a) 40mm on streets compacted to 93% RICE density (A-E2), COLTO Medium Grade (Full width re-surfacing of existing lanes on the exisitgn intersection)	m²	3910		
J3.2	8.5.5	**Variations in quantities of bituminous binder:**				
J3.2.1		60% Anionic stable grade Emulsion	ℓ	150		
J3.2.2		Penetration grade Bitumen				

STELLENBOSCH
STELLENBOSCH • PNIEL • FRANSCHHOEK
MUNISIPALITEIT • UMASIPALA • MUNICIPALITY

ITEM NO	PAYMENT	DESCRIPTION	UNIT	QTY	RATE (incl. VAT)	Amount (incl. VAT)
Brought Forward						
J3.2.2.1		70/100	ℓ	150		
J3.2.2.2		50/70	ℓ	150		
J4		**BITUMEN TREATED BASE**				
J4.1	PSMH 8.5.4	Supply and install (2 X 60mm) 120mm thick BTB (50/70 Penetration grade)	m³	150		
J5		**MISSILANIOUS**				
J5.1	PSC8.2.13	Remove existing road surfacing by milling (or other methodology approved by Engineer) and spoil to a legal dump site identified by the Contractor, including haulage for:				
J5.1.1		Existing asphalt up to 40mm thick	m²	3900		
J5.2	PSC8.2.14	Extra over item B4.1.1 for neat cutting of edges	m	225		
Total Carried Forward To Summary						

STELLENBOSCH
STELLENBOSCH • PNIEL • FRANSCHHOEK
MUNISIPALITEIT • UMASIPALA • MUNICIPALITY

BILL OF QUANTITIES
BILL 1: CIVIL

SECTION K: SEGMENTED PAVING

ITEM NO	PAYMENT	DESCRIPTION	UNIT	QTY	RATE (incl. VAT)	Amount (incl. VAT)
K	SANS 1200MJ	**SEGMENTED PAVING**				
K1	8.2.2	**CONSTRUCTION OF PAVING COMPLETE (PAVED SURFACING)** Construct pre-fabricated concrete/clay segmented paving complete. All concrete paving blocks shall comply to SANS 1058:2021. On Areas as shown on Dwg., pattern to be Herringbone unless stated otherwise and to approval of Engineer.				
K1.1		Supply and place, complete, inclusive of 20mm sand bedding layer compacted to 100% MOD AASHTO, cutting edges and header course new 50mm - 25 MPA (25/2.0) concrete Grey brick pavers (Bond Brick) Type S-C by C.E.L. Paving or similar and equal quality approved product.	m²	160		
K1.2		Supply and place, complete, inclusive of 20mm sand bedding layer compacted to 100% MOD AASHTO, cutting edges and header course new 50mm - 25 MPA (25/2.0) concrete Charcoal brick pavers (Bond Brick) Type S-C by C.E.L. Paving or similar and equal quality approved product.	m²	50		
K1.3		Supply and place, complete, inclusive of 20mm sand bedding layer compacted to 100% MOD AASHTO, cutting edges and header course new 65mm - 25 MPA (25/2.0) Autumn Clay Stock brick pavers (Bond Brick) Type S-C.	m²			Rate Only
K1.4		Supply and place, complete, inclusive of 20mm sand bedding layer compacted to 100% MOD AASHTO, cutting edges and header course new 73mm - 35 MPA (35/2.0) concrete De Hoop Red Modluar Clay brick pavers (Bond Brick) Type S-C.	m²	685		
K2		Extra-over Item K1.1, K1.2, K1.3 and K1.4 for additional header course within paved areas to form pattern as specified by Engineer, inclusive of cutting edges.	m	200		
K3		Supply and place, complete 150mm - 35 MPA concrete, smooth steel trowelled, monolithic surface finish (bullnose kerbs).	m³	25		

ITEM NO	PAYMENT	DESCRIPTION	UNIT	QTY	RATE (incl. VAT)	Amount (incl. VAT)
Brought Forward						
K4		Supply and place, complete, inclusive of 20mm sand bedding layer compacted to 100% MOD AASHTO, cutting edges and header course paved trial section for Item L5.1, L5.2, L5.3, L5.4 and L5.5. Remove and dispose of trial section upon the instruction of the Engineer.	m²	30		
Total Carried Forward To Summary						

STELLENBOSCH
STELLENBOSCH • PNIEL • FRANSCHHOEK
MUNISIPALITEIT • UMASIPALA • MUNICIPALITY

BILL OF QUANTITIES
BILL 1: CIVIL

SECTION L: ANCILLARY ROADWORKS

ITEM NO	PAYMENT	DESCRIPTION	UNIT	QTY	RATE (incl. VAT)	Amount (incl. VAT)
L	SANS 1200MM	**ANCILLARY ROADWORKS**				
L1		**PERMANENT TRAFFIC SIGNS**				
L1.1	PSMM 8.3.1	Supply and install sign faces of 1,4 mm thick Chromadek steel plate (Type G275) up to 2,0 m² including the following specified poles and concrete base to detail on DWG 34092.00-104-01: 76mm dia hot-dip galvanised poles, wall thickness of 3.5mm:				
L1.1.1		R201 - 60 (Speed Restriction)	No.	6		
L1.1.2		W301 (Traffic Signals ahead)	No.	6		
L1.1.3		W402 (Danger Plate)	No.	6		
L1.1.4		R110 (Pedestrians only)	No.	4		
L1.1.5		R1.3 (3-Way Stop)	No.	3		
L1.1.6		R103 (Keep left)	No.	5		
L1.1.7		R104 (Keep right)	No.	2		
L1.1.8		R213 (No U-Turn)	No.	4		
L1.1.9		R217 (Stop prohibition)	No.	4		
L1.1.10		W409 (Junction Chevron)	No.			Rate Only
L1.1.11		W410 (Dead-end chevron)	No.	1		
L1.1.12		W214 (Right lane ends)	No.	1		
L1.1.13		W104 (T-Junction warning)	No.	1		
L1.1.14		R112 (Cyclists And Pedestrians Only) 125mm dia tanalith treated timber poles:	No.	6		
L1.1.5		R103 (Keep Left)	No.	4		
L1.1.6		W104 (T-Junction warning)	No.	3		

STELLENBOSCH
STELLENBOSCH • PNIEL • FRANSCHHOEK
MUNISIPALITEIT • UMASIPALA • MUNICIPALITY

ITEM NO	PAYMENT	DESCRIPTION	UNIT	QTY	RATE (incl. VAT)	Amount (incl. VAT)
Brought Forward						
L1.2		Reinstate existing sign faces from stockpile up to 2,0 m², to detail on DWG 34092.00-104-01, on the following new road sign support poles and concrete base: <u>76mm dia hot-dip galvanised poles, wall thickness of 3.5mm:</u>				
L1.2.1		R112 (Cyclists And Pedestrians Only)	No.	1		
L1.2.2		R103 (Keep left)	No.	2		
L1.3		Reinstate road sign boards including new support poles and concrete bases to detail on DWG 34092.00-114-01:				
L1.3.1		Exceeding 2m² but not 10m²	No.	6		
L1.4		Extra over Item M1.2 for supplying new road sign support poles and concrete bases to detail on DWG 34092.00-104-01: Tanalith treated timber poles including conc. base:				
L1.4.1		125mm diameter	No.	4		
L1.4.2		150mm diameter	No.	2		
		Galvanised pole including concrete base:				
L1.4.3		76mm diameter	No.	8		
L2		**ROAD MARKINGS**				
	8.4.1	Non-reflectorized paint applied at nominal rate of 0,42 l/m² for:				
L2.1	8.4.1 (a)	**White lines (Broken or unbroken)**				
L2.1.1		200 mm wide WM2 (Standard)	m	300		
L2.1.2		200 mm wide WM2 (Extra)	m	250		
L2.1.3		100mm wide GM1 (Standard)	m	900		
L2.1.4		100mm wide GM1 (Extra)	m	200		
L2.1.5		100mm wide RM3	m	450		
L2.1.6		100 mm wide GM2	m	300		
L2.1.7		300 mm wide RTM1	m	100		

ITEM NO	PAYMENT	DESCRIPTION	UNIT	QTY	RATE (incl. VAT)	Amount (incl. VAT)
Brought Forward						
L2.1.8		300 mm wide RTM2	m	5		
L2.1.9		Yield Sign WM5	No.	1		
L2.1.10		Kerbfacing GM8	m	975		
L2.2.8	8.4.1 (a)	**Yellow lines (Broken or unbroken)**				
		100mm wide RM4.1 (Standard, Left edge line)	m	100		
L2.2	8.4.1 (c)	**White Characters and Symbols**				
L2.2.1		Arrow (GM3.3, WM7.1, WM7.2, WM7.4) GM3.1 - WM7.5, WM7.3	No.	54		
L2.3		Painted Island RM5	m²	300		
L2.4		Pedestrian Crossing 3m wide RTM3	m	100		
L2.5	8.4.1 (d)	**Yellow Characters and Symbols**				
L2.5.1		Arrow (RM8.1, RM8.2, RM8.4, RM8.5, RM8.3)	No.	20		
L2.6		**Kerb Markings**				
L2.6.1		GM8	m	350		
	8.4.2	Variation in rate of application from that stated for item SANS1200MM 8.4.1				
L2.7		a) White paint	ℓ	200		
L2.8		b) Yellow paint	ℓ	150		
L2.9	8.4.3	Road studs (Installation and maintenance):				
L2.9.1		a) High density metal (cast aluminium) pin type with 43 bead glass reflector type	No.	26		
L2.9.2		Reflective glass beads (PLASTILINE® Reflective Glass Beads EN 1423 212 – 850 Coated AP) applied using road marking machines or by hand.	m²	350		
L3		**SUNDRIES**				
L3.1		Supply and install 400mm x 400mm tactile ground surface indicator blocks, including 30mm sand bedding stabilised with cement				

STELLENBOSCH
STELLENBOSCH • PNIEL • FRANSCHHOEK
MUNISIPALITEIT • UMASIPALA • MUNICIPALITY

ITEM NO	PAYMENT	DESCRIPTION	UNIT	QTY	RATE (incl. VAT)	Amount (incl. VAT)
Brought Forward						
L3.1.1		a) Guidance blocks	No.	320		
L3.1.2		b) Warning blocks	No.	35		
L3.2		Supply and install 1,5 x 1,5m concrete pedestrian bench	No.	4		
L3.3		Protection of road/ footway edge as per details on DWG 34092.00-104-01:				
L3.3.1		Supply and install 100mm thick G5 gravel cap stabilised with 3-4% cement (on weight) compacted to 95% MOD AASHTO.	m³	120		
L3.4		Supply and install mole barriers complete to DWG 34092.00-104-01	m	800		
L3.5		Supply and install standard Armco Galv road barrier on standard spacing 150mm dia timber poles (carbolineum treated) to detail on DWG 34092.00-104-01	m			Rate Only
L3.6		Supply, Deliver and construct 1.25m High Mild Steel Stanchion fence as detailed in construction drawings, around structures or as directed by Engineer. Rate shall include the PVC coated diamond mesh fencing at the bottom fished to horizontal pole member.	m	150		
L4		**MISCELLANEOUS**				
L4.1		Supply deliver and place at dead-end chevron (W410) plate fixed with 6No rawl bolts to standard 3.0m length Precast New Jersey Barriers. Rate shall include to paint the Jersey Barrier with 2-coats of builders PVA. Placed at dead-end of roadways as directed by Engineer.	No.	3		
Total Carried Forward To Summary						

STELLENBOSCH
STELLENBOSCH • PNIEL • FRANSCHHOEK
MUNISIPALITEIT • UMASIPALA • MUNICIPALITY

BILL OF QUANTITIES
BILL 1: CIVIL

SECTION M: MEDIUM PRESSURE PIPELINES

ITEM NO	PAYMENT	DESCRIPTION	UNIT	QTY	RATE (incl. VAT)	Amount (incl. VAT)
M	SANS 1200DB	**MEDIUM PRESSURE PIPELINE**				
M1	8.2	**EXCAVATION**				
M1.1	PSDB 8.3.2	Excavate in all materials for trenches, select, backfill, compact and dispose of all surplus material for water main pipes with:				
M1.1.1		Dia up to over 200mm and up to 450mm for depths:				
M1.1.1.1		0,5 m 1,5 m	m	40		
M1.1.1.2		1,5 m 2,5 m	m	45		
M1.1.1.3		2,5 m 3,5 m	m	35		
M1.1.1.4		3,5 m 4,5 m	m			Rate Only
M1.2	PSDB 8.3.2	Extra-over items M.1.1 for:				
M1.2.1		Intermediate excavation	m³			Rate Only
M1.3	PSDB 8.3.2 (C)	Excavate unsuitable material from trench bottom	m³			Rate Only
M1.4	PSDB 8.3.5 (C)	Excavate by hand in soft material to expose existing services	m³			Rate Only
M1.5	PSDB 8.3.5	Existing services that intersect or adjoin a pipe trench				
M1.5.1		a) Services that intersect a trench				
M1.5.1.1		i) Overhead telephone lines	No	2		
M1.5.1.2		ii) Irrigation main	No	1		
M1.5.1.3		iii) Vineyard anchor post	No	4		
M1.5.1.4		iv) Stormwater concrete channel	No	1		
M1.5.2		b) Services that adjoin a trench				

STELLENBOSCH
STELLENBOSCH • PNIEL • FRANSCHHOEK
MUNISIPALITEIT • UMASIPALA • MUNICIPALITY

ITEM NO	PAYMENT	DESCRIPTION	UNIT	QTY	RATE (incl. VAT)	Amount (incl. VAT)
Brought Forward						
M1.5.2.1		i) Stormwater pipe	m	60		
M2	8.3.3	**EXCAVATION ANCILLARIES**				
M2.1		Make up deficiency on backfill material:				
M2.1.1	8.3.3.1 (c)	From commercial sources	m³	25		
M2.1.2	8.3.3.1 (c)	Other excavations site	m³	25		
M2.2		**FINISHES**				
M2.2.1	8.3.3.3	Compaction in road reserves, parking areas and walkways	m³	65		
M2.2.2	PSB 8.5	Disposal of Surplus or unsuitable materials from trench excavations from site to an approved spoil site identified by the Contractor, including haulage.	m³	90		
M3	SANS 1200 LB	**BEDDING (PIPES)**				
		Provision of bedding material compacted to 93% of MDD (100% for sand) with material from:				
M3.1	8.2.2.3	Commercial sources				
M3.1.1		a) Selected granular material	m³	25		
M3.1.2		b) Selected fill material	m³	35		
M3.2	8.2.2.1	Other excavations on site				
M3.2.1		a) Selected granular material	m³	8		
M3.2.2		b) Selected fill material	m³	10		
M4	SANS 1200 L	**MEDIUM-PRESSURE PIPELINES**				
M4.1	PSL 8.2.1	Supply, lay and bed class PE 100 PN12,5 HDPE water pipes on bedding for flexible pipes, test, flush and disinfect the following pipes:				
M4.1.1		25 mm dia	m	10		
M4.1.2		40 mm dia	m	30		
M4.1.3		150 mm dia	m	50		

ITEM NO	PAYMENT	DESCRIPTION	UNIT	QTY	RATE (incl. VAT)	Amount (incl. VAT)
Brought Forward						
M4.2	8.2.1	Supply, lay and bed PVC-U Class 12 water pipes on bedding for flexible pipes, test, flush and disinfect the following pipes:				
M4.2.1		50 mm dia	m			Rate Only
M4.2.2		110 mm dia	m	30		
M4.2.3		160 mm dia	m	65		
M4.2.4		200 mm dia	m	45		
M5	8.2.2	**SPECIALS AND FITTINGS: uPVC Pipes** Supply, lay, and bed for flexible pipes, joint, including cut pipes to lengths where required, test, flush and disinfect with necessary couplings				
M5.1		**TEES**				
M5.1.1		Buttwelded HDPE T-pieces				
M5.1.1.1		250 x 250 x 100 mm dia	No			Rate Only
M5.1.1.2		250 x 250 x 200 mm dia	No	1		
M5.1.2		Flanged to SANS 1123, Table 16 DI T-pieces				
M5.1.2.1		250 x 250 x 200 mm dia	No			Rate Only
M5.1.2.2		250 x 250 x 100 mm dia	No	1		
M5.2		Socketed Ductile Iron to fit uPVC pipes, including reducers as required, complete.				
M5.2.1		200 x 200 x 110 mm dia	No	2		
M5.2.2		200 x 200 x 200 mm dia	No	1		
M5.2.3		200 x 200 x 160 mm dia	No	1		
M5.3		**BENDS**				
M5.3.1		Class 12 Ductile Iron				
M5.3.1.1		50mm dia 90 deg	No	4		

STELLENBOSCH
STELLENBOSCH • PNIEL • FRANSCHHOEK
MUNISIPALITEIT • UMASIPALA • MUNICIPALITY

ITEM NO	PAYMENT	DESCRIPTION	UNIT	QTY	RATE (incl. VAT)	Amount (incl. VAT)
Brought Forward						
M5.3.1.2		160mm dia 90 deg	No	1		
M5.3.2		**Buttweld HDPE Bends**				
M5.3.2.1		50 mm dia 11,25 deg	No	2		
M5.3.2.2		50 mm dia 22,5 deg	No	2		
M5.3.2.3		50 mm dia 45 deg	No	2		
M5.3.2.4		50 mm dia 90 deg	No			Rate Only
M5.3.2.5		100 mm dia 11,25 deg	No			Rate Only
M5.3.2.6		100 mm dia 22,5 deg	No			Rate Only
M5.3.2.7		100 mm dia 45 deg	No			Rate Only
M5.3.2.8		160 mm dia11,25 deg	No			Rate Only
M5.3.2.9		160 mm dia 22,5 deg	No			Rate Only
M5.3.2.10		160 mm dia 45 deg	No			Rate Only
M5.3.2.11		160 mm dia 90 deg	No			Rate Only
M5.4		**Flanged to SANS 1123, Table 16 DI Bends**				
M5.4.1		100 mm dia 11,25 deg	No			Rate Only
M5.4.2		100 mm dia 22,5 deg	No			Rate Only
M5.4.3		100 mm dia 45 deg	No			Rate Only
M5.4.4		160 mm dia11,25 deg	No	1		
M5.4.5		160 mm dia 22,5 deg	No	2		
M5.4.6		160 mm dia 45 deg	No	2		
M5.4.7		160 mm dia 90 deg	No			Rate Only
M6		**END CAPS (Ductile Iron)**				

STELLENBOSCH
STELLENBOSCH • PNIEL • FRANSCHHOEK
MUNISIPALITEIT • UMASIPALA • MUNICIPALITY

ITEM NO	PAYMENT	DESCRIPTION	UNIT	QTY	RATE (incl. VAT)	Amount (incl. VAT)
Brought Forward						
M6.1		50mm dia	No	28		
M6.2		160mm dia	No	1		
M7		**FLANGED END** Supply and place flange adaptors, including stainless steel backing rings, bolts and nuts wrapped with denzo tape				
M7.1		Buttwelded HDPE PE100 PN16 section, flanges to SANS 1123 Table 16. Rate shall include the buttwelded composite stub and SS backing ring				
M7.1.1		160 mm dia	No	1		
M7.1.2		200 mm dia	No			Rate Only
M7.2		Mild Steel PN16 flange to SANS 1123 Table 16.				
M7.2.1		160 mm dia	No			Rate Only
M7.2.2		200 mm dia	No			Rate Only
M8		**VALVES**				
M8.1	PSL 8.2	Supply, in valve box and install on concrete support, joint, include cut pipes where necessary and test complete with: RSV Gate Valves (AVK or similar approved)				
M8.1.1		110mm dia	No.	3		
M8.1.2		160mm dia	No.	2		
M9		**ANCILLARIES**				
M9.1	PSL 8.1	Anchor/Thrust blocks and pedestals	m^3	10		
M9.2		Kerb markings for valves to be cut with the letter 'V' on the kerb face with grinder, 75 mm high x 5 mm thick, painted Blue	No	6		
M9.3		Kerb markings for fire hydrants to be cut with the letter 'H' on the face of kerb with grinder, 75 mm x 5 mm wide and the full kerb to be painted Yellow	No.	3		
M10	PSL 8.6	**VALVE CHAMBERS AND MANHOLES**				

ITEM NO	PAYMENT	DESCRIPTION	UNIT	QTY	RATE (incl. VAT)	Amount (incl. VAT)
Brought Forward						
M10.1		Supply, in valve box and install on concrete support, joint, include cut pipes where necessary and test complete with: RSV Gate Valves (AVK or similar approved)				
M10.1.1		160 mm main up to 1,5 m depth	No	3		
M10.1.2		200 mm main up to 1,5 m depth	No	2		
M11		**FIRE HYDRANT CHAMBERS AND MANHOLES**				
M11.1		Fire hydrants complete with T-pieces and extensions on uPVC pipes on:				
M11.1.1		160mm main up to 2,5 m depth	No	3		
M12	8.2.4	**WATER METERS**				
M12.1		200mm dia flanged Pulse bulk water meter. Rate shall include the chamber.	No			Rate Only
M13	8.2.5	**AIR VALVES AND CHAMBERS**				
M13.1		Supply and install air vents in chambers complete to dwg 34092.00-143-02. Rate shall include to supply and install Air valve (Vent-O-Mat Series RBX “Anti-Shock” Air Release and vacuum Break Valve, standard Double Acting air valve with the addition of an “Anti-Shock” Feature) plus oslation 50mm dia brass stop cock. Works include to lower/lift the existing chamber to suite new FRL.				
M13.1.1		50mm dia PN10	No	1		
M14		**SUNDRIES**				
M14.1		Tie into existing 100mm dia. uPVC Pipe	No	1		
M14.2		Tie into existing 200mm dia. uPVC Pipe	No	1		
M14.3		Tie into existing 250mm dia. uPVC Pipe	No	1		
M15		Supply, deliver and place concrete pipe marker/posts as detailed on Drawing No. 34092.00-143-01 for:				

STELLENBOSCH
STELLENBOSCH • PNIEL • FRANSCHHOEK
MUNISIPALITEIT • UMASIPALA • MUNICIPALITY

ITEM NO	PAYMENT	DESCRIPTION	UNIT	QTY	RATE (incl. VAT)	Amount (incl. VAT)
Brought Forward						
M15.1		Type A Pipe Marker. Consisting of 1500mm long 150mm dia. FC pipe filled with CL25/19 Concrete. Marker buried 750mm below ground level on top pipe along route and at positions indicated. The rate shall include the reinforcing required as well as the 100mm x 100mm x 2mm Thick Aluminium information label as detailed on drawing. Pipe marker shall be painted with white PVA (min 2-coats).	No	6		
M16		Supply, Deliver and place 'Treated Effluent' hazard Tape (200mm wide) at 100mm above the Treated Effluent/Irrigation main.	m			Rate Only
M17		**DISMANTLING JOINTS / PIPE COUPLINGS**				
M17.1		Supply, deliver, install and test Kamflex pipe couplings or similar approved product of equal quality for:				
M17.1.1		100 mm dia	No	4		
M17.1.2		160 mm dia	No	2		
M17.1.3		200 mm dia	No			Rate Only
M17.1.4		250 mm dia	No			Rate Only
Total Carried Forward To Summary						

STELLENBOSCH
STELLENBOSCH • PNIEL • FRANSCHHOEK
MUNISIPALITEIT • UMASIPALA • MUNICIPALITY

BILL OF QUANTITIES
BILL 1: CIVIL

SECTION N: SEWERS

ITEM NO	PAYMENT	DESCRIPTION	UNIT	QTY	RATE (incl. VAT)	Amount (incl. VAT)
N1	8.3.2	**EXCAVATION**				
N1.1	PS DB 8.1 8.3.2(a)	Excavate in all materials for trenches, select, backfill, compact and dispose of all surplus material for sewer main pipes with: Dia up to 500mm for depths: Over and Up to				
N1.1.1		0,5 m 1,5 m	m	15		
N1.1.2		1,5 m 2,0 m	m	45		
N1.1.3		2,5 m 4,0 m	m	25		
N1.2	8.3.2(b)	Extra-over items P.1.1 for:				
N1.2.1	a)	Intermediate excavation	m³	25		
N1.2.2	b)	Hard excavation	m³	3		
N1.3	8.3.2(c)	Excavate unsuitable material from trench bottom	m³	100		
N1.4	PSDB 8.4 (c)	Excavate by hand in soft material to expose existing services	m³	85		
N2	8.3.3	**EXCAVATION ANCILLARIES**				
N2.1		Make up deficiency on backfill material, including haulage:				
N2.1.1	8.3.3.1 (c) a)	From stockpile	m³	100		
N2.1.2	8.3.3.1 (c) b)	From other excavations on site	m³			
N2.1.3		From commercial sources	m³	45		
N2.2	PS DB 8.2.1	Compaction in road reserves, parking areas and walkways (layers of 150mm thickness)	m³	60		
N2.3	PSDB 8.6	Disposal of Surplus or unsuitable materials from trench excavations to stockpile identified by the Engineer, including haulage.	m³	125		

STELLENBOSCH
STELLENBOSCH • PNIEL • FRANSCHHOEK
MUNISIPALITEIT • UMASIPALA • MUNICIPALITY

ITEM NO	PAYMENT	DESCRIPTION	UNIT	QTY	RATE (incl. VAT)	Amount (incl. VAT)
Brought Forward						
N3	SANS 1200 LB	**BEDDING (PIPES)**				
	8.2.1	Provision of bedding material compacted to 93% of MOD AASHTO density (100% for sand) with material, including haulage:				
N3.1		Commercial sources				
N3.1.1		a) Selected granular material	m³	17		
N3.1.2		b) Selected fill material	m³	37		
N3.2		From other excavations on site				
N3.2.1		a) Selected granular material	m³	10		
N3.2.2		b) Selected fill material	m³	25		
N3.4	PSLB 8.2	Graded crushed stone for wet conditions	m³	15		
N3.5	8.2.4	Encasing of pipes with grade 20/19 Mpa concrete	m³	35		
N4	SANS 1200 LD	**SEWERS**				
N4.1	8.2.1	Supply, lay, joint, bed for flexible pipes and test uPVC class 34 sewer pipes with dia:				
N4.1.1		160mm dia	m	15		
N4.1.2		250mm dia	m	35		
N4.1.3		315mm dia	m			Rate Only
N5	8.2.3	**MANHOLES**				
N5.1		Fibre cement manholes complete to dwg no. S2 with 1000 mm chamber and shaft with SABS EN124 D400 heavy duty hinged ductile iron cover and frame for depths:				
		Over and Up to				
N5.1.1		0,5 m 1,5 m	No	1		
N5.1.2		1,5 m 2,0 m	No	2		
N5.1.1		2,0 m 3,5 m	No	1		

STELLENBOSCH
STELLENBOSCH • PNIEL • FRANSCHHOEK
MUNISIPALITEIT • UMASIPALA • MUNICIPALITY

ITEM NO	PAYMENT	DESCRIPTION	UNIT	QTY	RATE (incl. VAT)	Amount (incl. VAT)
Brought Forward						
N7		**SUNDRIES**				
	PS LD8.2	Connection to existing main sewers with:				
N7.1		Tie into existing sewer manhole for depth:				
		Over and Up to				
N7.1.1		2.0 m 2,5 m	No	1		
N7.3		Lowering of existing manhole to suit for depth:				
		Over and Up to				
N7.3.1		0.0 m 0,5 m	No	3		
Total Carried Forward To Summary						

STELLENBOSCH
STELLENBOSCH • PNIEL • FRANSCHHOEK
MUNISIPALITEIT • UMASIPALA • MUNICIPALITY

BILL OF QUANTITIES
BILL 1: CIVIL

SECTION O: TRAFFIC SIGNAL INSTALLATION

ITEM NO	PAYMENT	DESCRIPTION	UNIT	QTY	RATE (incl. VAT)	Amount (incl. VAT)
Brought Forward						
O1		**TRAFFIC SIGNALS**				
O1.1		**CONTROLLER**				
O1.1.1		Controller, Class CJ				
O1.1.1.1		Supply and installation of 24 phase XTE traffic controller in a Smartlock Rhino 1000 underground chamber fitted with a high security lid, equipped with a 4G router, GPS Timeset Module, Pedestrian Detector Module and dual antenna, commission and testing. Including the provision of a glanded PVC pipe for future installation of a fixed ADSL line and communication cable between UPS and controller, including concrete plinth, commission and testing	No	1		
O1.1.1.2		Supply and install MK4 Top Hat	No	1		
O1.1.2		Extra over item 1.1.1 for 4-channel detector units, total number of independent channels required is:				
O1.1.2.1		(i) Quad Detectors	No	4		
O1.1.2.2		(ii) Quad Pedestrian Detectors	No	1		
O1.2		**PEDESTRIAN PUSH BUTTONS**				
O1.2.1		Supply and installation of BPC Accessible Pedestrian Signal push buttons, including DUAT811 audio tactile controller	No	16		
O1.3		**SIGNAL FACE MODULES**				
O1.3.1		(a) S1 (LED optics), with background screen	No	2		
O1.3.2		(a) S2 (LED optics), with background screen	No	1		
O1.3.3		(a) S8 (LED optics), with background screen	No	7		
O1.3.4		(b) S9 (LED optics), with background screen	No	2		

ITEM NO	PAYMENT	DESCRIPTION	UNIT	QTY	RATE (incl. VAT)	Amount (incl. VAT)
Brought Forward						
O1.3.5		(c) S10L (LED optics), with background screen	No	2		
O1.3.6		(c) S10L (LED optics), with background screen	No	2		
O1.3.7		(c) S11P (LED optics), with background screen - 3 aspects 210mm dia. Pedestrian Countdown Timer lantern – complete with timer display; red man and green man (S11P with Pedestrian Countdown Timer - PCDT)	No	14		
O1.4		**POLES**				
O1.4.1		Supply and installation of poles, including bases and numbering complete				
O1.4.1.1		Non-hatch type 4m signal poles used to install 210mm lanterns	No	12		
O1.4.1.2		Totem type pole, length not exceeding 6m (provisional)	No	4		
O1.4.1.3		Cantilever type pole	No	3		
O1.4.2		Re-move, Stockpile for re-use and installation of poles, including bases complete				
O1.4.2.1		Non-hatch type 4m signal poles used to install 210mm lanterns	No	2		
O1.4.2.2		Totem type pole, length not exceeding 6m (provisional)	No	1		
O1.4.2.3		Cantilever type pole	No	1		
O1.5		**DISTRIBUTION PILLARS**				
O1.5.1		Supply and installation of Smartlock Rhino 1000 underground chamber as Traffic Signal distribution point, including concrete plinth	No	4		
O1.6		**POWER SUPPLY**				
O1.6.1		Supply cable from power source to controller 3-core 16mm² SWA	m	20		
O1.6.2		Extra over item (1.6.1) for laying cable in trench	m	20		
O1.6.3		Extra over item (1.6.1) for laying in duct (duct scheduled separately)	m	15		
O1.6.4		Extra over item (1.6.1) for connecting to mains power supply (provided by the Employer)	L/SUM	1		

ITEM NO	PAYMENT	DESCRIPTION	UNIT	QTY	RATE (incl. VAT)	Amount (incl. VAT)
Brought Forward						
O1.6.5		Extra over item (1.6.1) for connecting to controller	L/SUM	1		
O1.7		**37 - CORE CABLE**				
O1.7.1		Signal lamp supply ring-circuit cable from controller to distribution pillars and between distribution pillars: PVC insulated, galvanised steel wire armoured, 37-core cable of minimum cross-sectional area 1,5mm² as specified and 10mm² bare copper conductor in ring	m	250		
O1.7.2		Extra over item (1.7.1) for laying cable in trench	m	10		
O1.7.3		Extra over item (1.7.1) for laying cable in duct (scheduled separately)	m	240		
O1.7.4		Extra over item (1.7.1) for connecting to controller	No	1		
O1.7.5		Extra over item (1.8) for connecting to distribution pillar	No	4		
O1.8		**19 - CORE CABLE**				
O1.8.1		Signal lamp supply cable from distribution pillars to signal lights and pedestrian push buttons : PVC insulated, galvanised steel wire armoured, 19-core cable of minimum cross-sectional area 1,5mm² as specified and complete with cable marking tape	m	400		
O1.8.2		Extra over item (1.8.1) for laying cable in trench	m	50		
O1.8.3		Extra over item (1.8.1) for laying cable in duct (scheduled separately)	m	350		
O1.8.4		Extra over item (1.8.1) for connecting to distribution pillar	No	4		
O1.8.5		Extra over item (1.8.1) for connecting to signal head	No	42		
O1.8.6		Extra over item (1.8.1) for connecting to pedestrian push button	No	16		
O1.9		Extra over item 1.6, 1.7 and 1.8 for installation of bare copper earth wire of minimum cross sectional area 10mm² to be laid with SWA cables	m	500		

STELLENBOSCH
STELLENBOSCH • PNIEL • FRANSCHHOEK
MUNISIPALITEIT • UMASIPALA • MUNICIPALITY

ITEM NO	PAYMENT	DESCRIPTION	UNIT	QTY	RATE (incl. VAT)	Amount (incl. VAT)
Brought Forward						
O1.10		(a) Extra over item 1.1, 1.4, 1.5, 1.6, 1.7, 1.8 & 1.9 for excavation of trenches and backfill	m³	120		
		(b) Extra over item 1.4, 1.5, 1.6, 1.7, 1.8 & 1.9 for excavation and exposing of cable duct ends and other services	m³	20		
		(c) Extra over item 1.6 for reinstating existing paving and landscaping	m²	50		
O1.11	PS 2.1	Testing and Commissioning of installation. Issue CoC for Electrical Installation.	Sum	1		
O1.12	PS 2.2	Maintenance of installation during 12 month warranty period	Sum	1		
O1.13	PS 2.4	Accommodation of traffic	Sum	1		
O1.14	PS 2.5	Health and safety plan as per specification	Sum	1		
O1.15	PS 2.6	Syntell programming	Sum	1		
O1.16		Pole Tops incl. KUT 2.5MM Terminals	No	12		
O1.17		Copperweld earth spikes 1.2m long	No	16		
O1.18		PVC sleeves 110mm	m	250		
O2		**DETECTION**				
O2.1		**WIRELESS DETECTION**				
O2.1.1		**Supply and installation of vehicle detection**				
O2.1.1.1		(a) Flush mount wireless sensor (freeways and traffic signal control)	No	31		
O2.1.1.2		(b) Clear plastic shell for flush mount sensor	No	31		
O2.1.1.3		(c) Repeater (including 57 ah battery pack)	No	9		
O2.1.1.4		(d) Mounting kit for access points & repeaters	No	9		

STELLENBOSCH
STELLENBOSCH • PNIEL • FRANSCHHOEK
MUNISIPALITEIT • UMASIPALA • MUNICIPALITY

ITEM NO	PAYMENT	DESCRIPTION	UNIT	QTY	RATE (incl. VAT)	Amount (incl. VAT)
Brought Forward						
O2.1.1.5		(e) Cable outdoor cat5 ethernet from access point to access box, length 20m	No	2		
O2.1.1.6		(f) Cable cat5 ethernet from cc to access box, length 1m	No	3		
O2.1.1.7		(g) Pedestrian card (not required in mx controller)	No			
O2.1.1.8		(h) Epoxy tube for installation of vsn240-t	No	31		
O2.1.1.9		(i) Dual component epoxy applicator (reusable for multiple sites)	No	1		
O2.1.1.10		(j) Concrete 4-inch coring bit (reusable for multiple sites)	No	1		
O2.1.1.11		(k) 8 meter pole (for mounting access points and repeaters)	No	8		
O2.1.1.12		(l) SPP Digital Radio Antenna	No	2		
O2.1.1.13		(m) Flex Control Card	No	1		
O2.1.1.14		Flex Isolator Module	No	1		
O2.2		**AI TRAFICAM DETECTION** **Supply and installation of video vehicle detection**				
O2.2.1		Supply and install of TrafiCam AI narrow-angle camera on 8 m spike pole (including cherry picker measured separately)	each	4		
O2.2.2		Supply and install of AI TI interface unit (1TI/4TI) in controller	each	1		
O2.2.3		Supply and install of TI BPL3 interface	each	1		
O2.2.4		Supply and install of TrafiOne pedestrian / cyclist AI sensor	each	4		
O2.2.5		AI camera set-up, zones and aiming per camera	each	1		

STELLENBOSCH
STELLENBOSCH • PNIEL • FRANSCHHOEK
MUNISIPALITEIT • UMASIPALA • MUNICIPALITY

ITEM NO	PAYMENT	DESCRIPTION	UNIT	QTY	RATE (incl. VAT)	Amount (incl. VAT)
Brought Forward						
O3		**TEMPORARY WORKS**				
O3.1		1) Trench 500mm x 500mm (500mm depth)	m	125		
O3.1.1		Relocation of existing Titanic and contents	No	1		
O3.1.2		Removal of existing cantilever pole	No	3		
O3.1.3		Relocate base mounted controller to temporary position	No	1		
O3.1.4		Relocation of push buttons	No	6		
O3.1.5		Relocation of connection pillar	No	2		
O3.1.6		Supply and install temporary pole	No	3		
O3.1.7		Relocate 4m pole	No	3		
O3.2		**Relocation of existing traffic signal lantern**				
O3.2.1		1) 2 aspect lantern (Larger Option)	No	6		
O3.2.2		2) 5 aspect lantern (Larger Option)	No	10		
O3.2.3		3) 3 aspect lantern (Larger Option)	No	2		
O3.3		**Install cables in trenches and connect to mains and controller**				
O3.3.1		1) 3 core (mains)	No	1		
O3.3.2		2) 2 core cable 1.5mm	No	0		
O3.3.3		3) 19 core cable 1.5mm	m	1		
O3.3.4		4) 37 core cable 1.5mm	No	1		
O3.4		**General**				
O3.4.1		1) Traffic accommodation	Sum	1		
O3.4.2		2) Health and Safety	Sum	1		
O4		**TRAFFIC SIGNALIZATION**				
O4.1		Temporary traffic signals. Rate shall include to maintain the traffic signals and move around according to the phase construction procedure outlined in the traffic accommodation section.	Prov. Sum	1	235 000	235 000

STELLENBOSCH
STELLENBOSCH • PNIEL • FRANSCHHOEK
MUNISIPALITEIT • UMASIPALA • MUNICIPALITY

ITEM NO	PAYMENT	DESCRIPTION	UNIT	QTY	RATE (incl. VAT)	Amount (incl. VAT)
Brought Forward						
O4.2		Overheads, charges and profit on item A3.4.1	%	235 000		
O4.3		Cost to re-visit the installation for adjustments after a 3-month trial period.	Prov. Sum	1	105 750	105 750
O4.4		Overheads, charges and profit on item A3.4.1	%	105 750		
O5 O5.1		**Uninterrupted Power Supply** Supply and installation of Victron inverter 48V 3000VA, with a 48V 5kw Lithium-Ion (Volta Stage 1) battery in a Smartlock Rhino 1000 underground chamber (fitted with a high security lid) fitted with a Victron Crebo GX device, including a Victron 4G LTE GSM modem for comms.	No.	1		
Total Carried Forward To Summary						

STELLENBOSCH
STELLENBOSCH • PNIEL • FRANSCHHOEK
MUNISIPALITEIT • UMASIPALA • MUNICIPALITY

BILL OF QUANTITIES
BILL 1: CIVIL

SUMMARY OF SECTIONS

Section	Description	Amount (incl. VAT)
1.1	SECTION A: PRELIMINARY AND GENERAL	
1.2	SECTION B: SITE CLEARANCE	
1.3	SECTION C: EARTHWORKS	
1.4	SECTION D: CABLE DUCTS	
1.5	SECTION E: STORMWATER (ROAD DRAINAGE)	
1.6	SECTION F: BULK STORMWATER	
1.7	SECTION G: SUBBASE	
1.8	SECTION H: KERBING AND CHANNELLING	
1.9	SECTION I: BASE	
1.10	SECTION J: ASPHALT BASE AND SURFACING	
1.11	SECTION K: SEGMENTED PAVING	
1.12	SECTION L: ANCILLARY ROADWORKS	
1.13	SECTION M: MEDIUM PRESSURE PIPELINES	
1.14	SECTION N: SEWERS	
1.15	SECTION O: TRAFFIC SIGNAL INSTALLATION	
	SUBTOTAL	

STELLENBOSCH
STELLENBOSCH • PNIEL • FRANSCHHOEK
MUNISIPALITEIT • UMASIPALA • MUNICIPALITY

BILL OF QUANTITIES
BILL 2 - STREET LIGHTING

SECTION A: WAYLEAVE APPLICATION/ELECTRICAL CONNECTION FEE

ITEM NO	PAYMENT	DESCRIPTION	UNIT	QTY	RATE (incl. VAT)	Amount (incl. VAT)
A	SANS 1200A	**PRELIMINARY AND GENERAL**				
A1		Electrical Connection Fee				
A1.1		Electrical connection fee for all the specified new supply to be carried out by the Supply Authority. Electrical connection fee				
A1.1.1		Stellenbosch Municipality	Prov Sum	1	80 000	80 000
		Allow for profit on the item above (A1.1.1)	%	80 000		
		Attendance and charges required by the Contractor:				
A1.1.2		Stellenbosch Municipality Provision of attendance during construction for the Main Contractor as specified.	Sum	1		
A1.1.3		Stellenbosch Municipality Permits required by Contractor:	Sum	1		
A1.1.4		Stellenbosch Municipality	Sum	1		
A1.2		Wayleave Applications:				
A1.2.1		Liaising with all relevant Local Supply Authorities and application for Wayleave Permissions for the latter: ESKOM Stellenbosch Municipality: Electrical Department Stellenbosch Municipality: Water & Sanitation Department Stellenbosch Municipality: Roads & Stormwater Department	Sum	1		

STELLENBOSCH
STELLENBOSCH • PNIEL • FRANSCHHOEK
MUNISIPALITEIT • UMASIPALA • MUNICIPALITY

ITEM NO	PAYMENT	DESCRIPTION	UNIT	QTY	RATE (incl. VAT)	Amount (incl. VAT)
Brought Forward						
		Stellenbosch Municipality: Information Systems & Technology Telkom Neotel Dark Fibre Africa Vodacom				
Total Carried Forward To Summary						

STELLENBOSCH
STELLENBOSCH • PNIEL • FRANSCHHOEK
MUNISIPALITEIT • UMASIPALA • MUNICIPALITY

BILL OF QUANTITIES
BILL 2 - STREET LIGHTING

SECTION B1: CIVIL WORKS RELATED TO BULK ELECTRICAL SERVICES

ITEM NO	PAYMENT	DESCRIPTION	UNIT	QTY	RATE (incl. VAT)	Amount (incl. VAT)
B	SANS1200 C	**CIVIL WORKS RELATED TO BULK ELECTRICAL SERVICES**				
B1		**TRENCH EXCAVATIONS**				
B1.1		Excavation for cable and sleeve trench, holes for light poles and foundations for LV kiosks including termporary support of sides, keeping excavation dry, bedding material, backfilling, and compacting as specified. Where required, the removal of excess material from site shall be included in the rates as well. Refer to drawing 34092.00-301-01 Detail H and specifications for more details.				
B1.1.1		450mm Wide x 600mm deep	m	3 500		
B1.1.2		Select from excavation materials and install a sand bedding in trench, 150mm deep and 450mm wide (75mm above and 75mm deep below the cable).	m³	236		
B1.1.3		Backfilling of trenches with excavated soil after cables have been laid and tested, complete with compacting of backfilling, levelling off of trenches and removing and dumping of surplus escavated material.	m³	709		
B1.1.4		Over and above rate for hand excavating around live MV cables - 1000mm deep.	m			Rate Only
B1.1.5		Over and above excavating in tarred surfaces.	m	100		
B1.1.6		Holes for light poles (2m deep hand excavation).	No	98		
B1.1.7		Tunnel existing road for installation of electrical ducts and reinstate road surface to match existing. Depth 1000mm below FFL.	R/m	1		Rate Only

STELLENBOSCH
STELLENBOSCH • PNIEL • FRANSCHHOEK
MUNISIPALITEIT • UMASIPALA • MUNICIPALITY

ITEM NO	PAYMENT	DESCRIPTION	UNIT	QTY	RATE (incl. VAT)	Amount (incl. VAT)
Brought Forward						
B1.2		**Supply and install Class 6 uPVC ducts complete, laid in trench or placed in position to be cast in at road crossings, intersection, etc** Ø160mm diameter				
B1.2.1		Supply	m	30		
B1.2.2		Install	m	30		
		Ø110mm diameter				
B1.2.3		Supply	m	100		
B1.2.4		Install	m	100		
B1.3		**Seal Sleeve Ends**				
B1.3.1		Supply and install seal Ø160mm PVC duct ends with water-proof expandable foam	No	4		
B1.3.2		Supply and install seal Ø110mm PVC duct ends with water-proof expandable foam	No	20		
B1.4		**Concrete Route Markers**				
B1.4.1		Mark curbs with "E" on all road crossings.	No	10		
B1.5		**PVC Warning Tape**				
B1.5.1		Supply and install PVC warning tape in trench above cables or ducts.	m	3 500		
B1.6		**Draw wire**				
B1.6.1		Supply and install 2mm draw wire or 6mm diameter nylon draw cord in duct as required	m	400		
Total Carried Forward To Summary						

STELLENBOSCH
STELLENBOSCH • PNIEL • FRANSCHHOEK
MUNISIPALITEIT • UMASIPALA • MUNICIPALITY

BILL OF QUANTITIES
BILL 2 - STREET LIGHTING

SECTION B2: EXISTING SERVICES - RE-ROUTE/REMOVAL OF EXISTING

ITEM NO	PAYMENT	DESCRIPTION	UNIT	QTY	RATE (incl. VAT)	Amount (incl. VAT)
Brought Forward						
B		**EXISTING SERVICES - RE-ROUTE/REMOVAL OF EXISTING**				
B2		**Removal and make safe of existing streetlighting poles, fittings and cables in trenches. All street lighting poles and luminaires that are removed are to be handed back to Stellenbosch Municipality Public Lighting Department. Transport to be included.**				
B2.1		Removal of poles 13.5m bow poles.	No	80		
B2.1.1		Removal of HPS street light fitting.	No	80		
B2.2		LV cable description 600/1000 V PVC/PVC/SWA/PVC 16mm² x 4 Core CU armoured street light cable				
B2.2.1		Supply	m	40		
B2.2.2		Install	m	40		
B2.2.3		Re-route existing cables	m	40		
B2.2.4		Joints Cable identification via approved calibrated instrument.	No	4		
B2.2.5		Cable identification	R/Hr	8		
B2.3		Relocating of luminaires and poles: Relocate existing light fittings and poles as indicated on drawings. Allowance to be made for relocations, installation, connection of cables and commissioning. Removal measured elsewhere.				

STELLENBOSCH
STELLENBOSCH • PNIEL • FRANSCHHOEK
MUNISIPALITEIT • UMASIPALA • MUNICIPALITY

ITEM NO	PAYMENT	DESCRIPTION	UNIT	QTY	RATE (incl. VAT)	Amount (incl. VAT)
Brought Forward						
B2.3.1		Relocate existing HPS light fittings and poles.	No			Rate Only
B2.3.2		Relocate existing street light poles. Excavation and pole holes measured elsewhere.	No			Rate Only
B2.3.3		Provision for stacking of poles. Existing Communication Services:	No	1		
B2.3.4		Relocate/re-route existing Neotel and Dark Fibre Africa underground fibre cables.	Prov Sum	1	80 000	80 000
B2.3.5		Allow for profit on the item above (B.2.3.4)	%	80 000		
B2.3.6		Supply and construct 600x600x675mm deep Neotel manhole as per Neotel's specifications.	No	1		
B2.3.7		Supply and construct 600x600x675mm deep DFA manhole as per DFA's specifications.	No	1		
B2.3.8		Relocate/re-route existing Telkom underground fibre cables.	m			Rate Only
B2.3.9		Supply and construct 600x600x675mm deep Telkom manhole as per Telkom's specifications.	m			Rate Only
Total Carried Forward To Summary						

STELLENBOSCH
STELLENBOSCH • PNIEL • FRANSCHHOEK
MUNISIPALITEIT • UMASIPALA • MUNICIPALITY

BILL OF QUANTITIES
BILL 2 - STREET LIGHTING

SECTION B3: ELECTRICAL SUPPLY CABLES

ITEM NO	PAYMENT	DESCRIPTION	UNIT	QTY	RATE (incl. VAT)	Amount (incl. VAT)
B		**ELECTRICAL SUPPLY CABLES**				
B3		**SUPPLY, INSTALL AND COMMISSION 600/1000 V PVC/PVC/SWA/PVC ALUMINIUM CABLE LAID IN TRENCHES, DRAWN IN DUCTS, OR ON SURFACE INCLUDING CUTOFFS, STRAPPING, CLAMPING, SUPPORT, ETC AS REQUIRED.**				
B3.1		Cable to include terminations,glands, shrouds, lugs, clamping, supports, all accessories and connections commissioning. NOTE: For ordering of cables, measurement shall NOT be taken from this bill. Actual cable lengths shall be measured on site for ordering and installation purposes. 35mm² x 4 core cable				
B3.1.1		Supply	m	20		
B3.1.2		Install in duct and trenches	m	20		
B3.1.3		Terminate in junction box or distribution kiosk	No	2		
B3.1.4		Cable joint	No	1		
		25mm² x 4 core cable				
B3.1.5		Supply	m	3 600		
B3.1.6		Install in duct and trenches	m	3 600		
B3.1.7		Terminate in lamp pole, junction box or distribution kiosk	No	106		
B3.1.8		Cable joint	No	4		
		2.5mm² x 2 core + earth screened cable				
B3.1.9		Supply	m	1 600		

STELLENBOSCH
STELLENBOSCH • PNIEL • FRANSCHHOEK
MUNISIPALITEIT • UMASIPALA • MUNICIPALITY

ITEM NO	PAYMENT	DESCRIPTION	UNIT	QTY	RATE	Amount R
Brought Forward						
B3.1.10		Install in pole	m	1 600		
B3.1.11		Terminate on HRC fuse and luminaire	No	106		
B3.2		Bare stranded copper earth wire strapped to cables. Terminations to include drilling, bolting, lugs and connections. 25mm²				
B3.2.1		Supply	m	20		
B3.2.2		Install	m	20		
B3.2.3		Terminate 16mm²	No	2		
B3.2.4		Supply	m	3 600		
B3.2.5		Install	m	3 600		
B3.2.6		Terminate 1.8m Copper Earth Spike	No	106		
B3.2.7		Supply	No	4		
B3.2.8		Install	No	4		
B3.3		Supply and install cable identification lables				
B3.3.1		Supply and install suitable cable identification labels on cables to Stellenbosch Municipality specification.	No	50		
Total Carried Forward To Summary						

STELLENBOSCH
STELLENBOSCH • PNIEL • FRANSCHHOEK
MUNISIPALITEIT • UMASIPALA • MUNICIPALITY

BILL OF QUANTITIES
BILL 2 - STREET LIGHTING

SECTION B4: DISTRIBUTION KIOSKS

ITEM NO	PAYMENT	DESCRIPTION	UNIT	QTY	RATE (incl. VAT)	Amount (incl. VAT)
B		**DISTRIBUTION KIOSKS**				
B4		**Supply and install Distribution Kiosk**				
B4.1		Three phase street lighting control kiosks complete with plinth, doors, frames, sub-frames, chasis, fixtures, switchgear, including circuit breakers, terminations, bus-bars, wiring, labeling, legend cards and spare space per photocell, contactors single line diagram 34092.00-312-01. Complete with all accessories. 6 way distribution kiosk				
B4.1.1		Supply	No	1		
B4.1.2		Install	No	1		
B4.2		Concrete foundation plinth for distribution kiosks. 6 way distribution kiosk plinth				
B4.2.1		Supply	No			Rate Only
B4.2.2		Install	No			Rate Only
		10A HRC fuse				
B4.2.3		Supply	No	98		
B4.2.4		Install	No	98		
		Fuse holder single phase installed in street light pole.				
B4.2.5		Supply	No	98		
B4.2.6		Install	No	98		
Total Carried Forward To Summary						

STELLENBOSCH
STELLENBOSCH • PNIEL • FRANSCHHOEK
MUNISIPALITEIT • UMASIPALA • MUNICIPALITY

BILL OF QUANTITIES
BILL 2 - STREET LIGHTING

SECTION B5: STREET LIGHTING POLES INSTALLATION

ITEM NO	PAYMENT	DESCRIPTION	UNIT	QTY	RATE (incl. VAT)	Amount (incl. VAT)
B		**STREET LIGHTING POLES INSTALLATION**				
B5		**Supply and installation of streetlighting poles**				
B5.1		7.2m Straight steel stepped pole , as per Specifications, complete with decorative extension, access cover, cable termination and facilities plates and all accessories as specified. 250mm Spigot, 0° inclination angle excluded.				
B5.1.1		Supply	No	2		
B5.1.2		Install in ground to depth of 1200mm	No	2		
B5.2		13.5m Straight steel stepped pole, as per Specifications, complete with decorative extension, access cover, cable termination and facilities plates and all accessories as specified. 250mm Spigot, 0° inclination angle excluded.				
B5.2.1		Supply pole	No	96		
B5.2.2		Install pole to depth of 1700mm Single Short Side Entry adaptor (SSE) - 0° degree as specified.	No	96		
B5.2.3		Supply	No	92		
B5.2.4		Install Double Short Side Entry adaptor (SSE) - 0° degree as specified.	No	92		
B5.2.5		Supply	No	6		
B5.2.6		Install	No	6		
B5.3		Baseplate to specifications for 7-10m steel poles.				

STELLENBOSCH
STELLENBOSCH • PNIEL • FRANSCHHOEK
MUNISIPALITEIT • UMASIPALA • MUNICIPALITY

ITEM NO	PAYMENT	DESCRIPTION	UNIT	QTY	RATE (incl. VAT)	Amount (incl. VAT)
Brought Forward						
B5.3.1		Supply	No	2		Rate Only
B5.3.2		Install in ground	No	2		Rate Only
B5.4		Baseplate to specifications for 5.2 - 13.5m steel poles.				
B5.4.1		Supply	No	4		
B5.4.2		Install on concrete barrier	No	4		
B5.5		Alignment Tests				
B5.5.1		Street Lighting pole alignment	No	98		
B5.5.2		Electrical testing and commissioning of lighting pole	No	98		
Total Carried Forward To Summary						

STELLENBOSCH
STELLENBOSCH • PNIEL • FRANSCHHOEK
MUNISIPALITEIT • UMASIPALA • MUNICIPALITY

BILL OF QUANTITIES
BILL 2 - STREET LIGHTING

SECTION B6: STREET LIGHT FITTING INSTALLATION

ITEM NO	PAYMENT	DESCRIPTION	UNIT	QTY	RATE (incl. VAT)	Amount (incl. VAT)
B6		**STREET LIGHT FITTING INSTALLATION**				
B6.1		**SUPPLY AND INSTALLATION OF STREET LIGHTING FITTINGS**				
B6.1.1		Beka LED Lume XP2 40LED/100W Optic 5307 as specified, or better approved. Mounting height: 6.2m				
B6.1.1.1		Supply	No	2		
B6.1.1.2		Install on 6.2m steel pole	No	2		
B6.2.1		Beka LED Lume XP2 40LED/100W Optic 5307 as specified, or better approved. Mounting height: 11.8m.				
B6.2.1.1		Supply	No	104		
B6.2.1.2		Install on 13.5m steel pole	No	104		
B6.3.1		**Final Focussing of Luminaries**				
B6.3.1.1		Focusing of Luminaries on 7.3m poles	No	2		
B6.3.1.1		Focusing of Luminaries on 13.5m poles	No	104		
B6.3.1.3		Allow bonding as required by the Supply Authority and the Regulations	No	6		
Total Carried Forward To Summary						

STELLENBOSCH
STELLENBOSCH • PNIEL • FRANSCHHOEK
MUNISIPALITEIT • UMASIPALA • MUNICIPALITY

BILL OF QUANTITIES
BILL 2 - STREET LIGHTING

SECTION C: ADDITIONAL ELECTRICAL WORKS: COMPLETION

ITEM NO	PAYMENT	DESCRIPTION	UNIT	QTY	RATE	Amount R
C		**TESTING AND COMMISSIONING**				
C1.1		Test and commission complete lighting network, including provision of Certificate of Compliance.	Sum	1		
C1.2		**As-Built Record Drawings**				
C1.2.1		Provide marked-up copy of "As-built" record drawings of the complete street lighting system	No	4		
C1.2.2		Provide "A3" LV network drawings and fix to inside of each Distribution Kiosk door.	Sum	1		
C1.2.3		**Provide complete Operating and Maintenance Manuals as specified.**	No	4		
C1.2.4		Compliance to Health and Safety regulations as per specifications.	item	1		
C1.2.5		Allowance for compliance to Environmental regulations as per specifications.	item	1		
Total Carried Forward To Summary						

STELLENBOSCH
STELLENBOSCH • PNIEL • FRANSCHHOEK
MUNISIPALITEIT • UMASIPALA • MUNICIPALITY

BILL OF QUANTITIES
BILL 2 - STREET LIGHTING

SUMMARY OF SECTIONS

Section	Description	Amount (incl.VAT)
2.1	SECTION A: WAYLEAVE APPLICATION/ELECTRICAL CONNECTION FEE	
2.2.1	SECTION B1: CIVIL WORKS RELATED TO BULK ELECTRICAL SERVICES	
2.2.2	SECTION B2: EXISTING SERVICES - RE-ROUTE/REMOVAL OF EXISTING	
2.2.3	SECTION B3: ELECTRICAL SUPPLY CABLES	
2.2.4	SECTION B4: DISTRIBUTION KIOSKS	
2.2.5	SECTION B5: STREET LIGHTING POLES INSTALLATION	
2.2.6	SECTION B6: STREET LIGHT FITTING INSTALLATION	
2.3	SECTION C: ADDITIONAL ELECTRICAL WORKS: COMPLETION	
	SUBTOTAL	

STELLENBOSCH
STELLENBOSCH • PNIEL • FRANSCHHOEK
MUNISIPALITEIT • UMASIPALA • MUNICIPALITY

BILL OF QUANTITIES
BILL 3: SUB-STATION EQUIPMENT

SECTION A: PRELIMINARY AND GENERAL

ITEM NO	PAYMENT	DESCRIPTION	UNIT	QTY	RATE (incl. VAT)	Amount (incl. VAT)
A		**PRELIMINARY AND GENERAL**				
A1		**GENERAL REQUIREMENTS AND CONDITIONS** Allow for all costs and expenses in connection with the following:				
A1.1		Providing Performance Security - Demand Guarantee	Sum	1		
A1.2		Providing Insurances	Sum	1		
A1.3		Design of the Works and submission of Contractor's Documents	Sum	1		
A1.4		Establishment/de-establishment on Site in 2025	Sum	1		
A1.5		General expenses incurred in complying with the requirements of T1.2 Tender Data	Sum	1		
A1.6		General expenses incurred in complying with the requirements of C1.2 Contract data, not included above	Sum	1		
A1.7		Other General expenses incurred in complying with the requirements of the Scope of Work not included above (Specify):				
A1.7.1		a)	Sum			
A1.7.2		b)	Sum			
A1.7.3		c)	Sum			
A1.7.4		d)	Sum			
A1.8		General expenses incurred in liaison with Civil Contractor delivering building structures	Sum	1		

ITEM NO	PAYMENT	DESCRIPTION	UNIT	QTY	RATE (incl. VAT)	Amount (incl. VAT)
Brought Forward						
A1.9		Site Security for the duration of the works where underground cables are being worked on and while the substation is being fitted out. 2 guards per shift.	Sum	1		
A1.10		Appointment of a Private Security Company for armed response for the duration described above.	Sum	1		
A1.11		Appointment of Security Supervisors for the duration of the Contract, including supply and maintaining two-way radios and cell phones	Sum	1		
A1.12		As-built and O&M documentation for substation equipment within this BOQ (Bill 3). 3 sets on USB memory sticks. 3 sets hard copies in files.	Sum	1		
Total Carried Forward To Summary						

STELLENBOSCH
STELLENBOSCH • PNIEL • FRANSCHHOEK
MUNISIPALITEIT • UMASIPALA • MUNICIPALITY

BILL OF QUANTITIES
BILL 3: SUB-STATION EQUIPMENT

SECTION B: ELECTRICAL SWITCHGEAR & MV EQUIPMENT

ITEM NO	PAYMENT	DESCRIPTION	UNIT	QTY	RATE (incl. VAT)	Amount (incl. VAT)
B1		**SWITCHGEAR** **Supply and install MV gas-insulated (sealed for life) switchgear in type-tested, metal clad panels complete with rear arc exhaust channels, all auxiliary equipment as specified and according to Single Line Diagram. Type of switchgear to be ABB SafePlus.**				
B1.1		Incomer cable feeder with plug in 110V metering VT. Key interlock.	No.	3		
B1.2		Bus sectionaliser with plug in 110V metering VT. Key interlock.	No.	1		
B1.3		Bus riser with plug in 110V metering VT	No.	1		
B1.4		Local transformer feeder with relays	No.	1		
B1.5		Cable feeder	No.	4		
B1.6		Provisional sum for design of protection settings by specialist	Prov Sum	1	150 000	150 000
B1.7		Percentage mark-up on proven cost item above	%	150 000		
B1.8		Setup and commissioning of 11kV circuit breakers including implementing protection settings	Sum	1		
B2		**GENERAL EQUIPMENT**				
B2.1		Internal arc exhaust duct system complete for both bus sections and exhaust links to outside of building. Horizontal length to allow for panel extension of one unit on each side. Includes 90˚ bend to vertical end pieces at exit points and blast membrane. Includes making of holes in wall, repair and paint.	Sum	1		

STELLENBOSCH
STELLENBOSCH • PNIEL • FRANSCHHOEK
MUNISIPALITEIT • UMASIPALA • MUNICIPALITY

ITEM NO	PAYMENT	DESCRIPTION	UNIT	QTY	RATE (incl. VAT)	Amount (incl. VAT)
Brought Forward						
B2.2		Earthing of all switchgear and equipment including new earth bar and outdoor earth configuration. Earth measurements to be provided.	Sum	1		
B2.3		Test and commission complete substation as specified. All test certificates to be provided.	Sum	1		
B2.4		Supply, install, battery tripping unit (BTU) as specified including protection and supply cable to switchgear. To include all equipment for telemetry signals as specified as well as testing and commissioning.	Sum	1		
B2.5		Factory acceptance tests of MV electrical equipment in Johannesburg for 4 delegates from Cape Town including return flights and one night accommodation. Proven cost.	Prov. Sum	1	40 000	40 000
B2.6		Percentage on item above for profit and attendance	%	40 000		
Total Carried Forward						

STELLENBOSCH
STELLENBOSCH • PNIEL • FRANSCHHOEK
MUNISIPALITEIT • UMASIPALA • MUNICIPALITY

BILL OF QUANTITIES
BILL 3: SUB-STATION EQUIPMENT

SECTION B: ELECTRICAL SWITCHGEAR & MV EQUIPMENT

ITEM NO	PAYMENT	DESCRIPTION	UNIT	QTY	RATE (incl. VAT)	Amount (incl. VAT)
B2.7		Provisional Sum for installation of a telemetry contact system and Scada setup on existing Stellenbosch Municipality system by a specialist	Prov. Sum	1	250 000	250 000
B2.8		Percentage on item above for profit and attendance	%	250 000		
B3		**TRANSFORMERS**				
B3.1		Supply and install 500kVA, 3CR12 Type-A miniature sub-station complete with 800A MCCB and vermin proofing.	Sum	1		
B3.2		Supply and install pre-cast plinth for mounting of mini-substation	No.	1		
B3.3		Commissioning and test certificates for minisub	Sum	1		
B4		**LV BOARDS AND KIOSKS**				
		Supply and install.				
B4.1		LV DB-Blakes Estate as per SLD, Circuit breakers to be Hager or equivalent and approved.	No.	1		
B4.2		6-Way grey polyethylene double door kiosk complete with 63A TPN isolator and 6 Off 20A MCBs.	No.	1		
Total Carried Forward To Summary						

STELLENBOSCH
STELLENBOSCH • PNIEL • FRANSCHHOEK
MUNISIPALITEIT • UMASIPALA • MUNICIPALITY

BILL OF QUANTITIES
BILL 3: SUB-STATION EQUIPMENT

SECTION C: CABLES

ITEM NO	PAYMENT	DESCRIPTION	UNIT	QTY	RATE (incl. VAT)	Amount (incl.VAT)
C		**CABLES**				
C1		**MV CABLES**				
		PILC MV cable, complete with glands, K-clamps and lugs as specified. NOTE: For ordering of cables, measurement shall NOT be taken from this bill. Actual cable length shall be measured on site for ordering and installation purposes. Install cable according to SANS 10142 requirements with sand and danger tape.				
C1.1		185mm² x 3 Core Cu armoured MV cable				
C1.1.1		Supply	m	400		
C1.1.2		Install	m	400		
C1.1.3		Re-route existing cables	m	150		
C1.1.4		Joints	No.	16		
C1.1.5		Sealing cable ends	No.	8		
C1.1.6		Termination	No.	8		
C1.2		70mm² x 3 Core Cu armoured MV cable				
C1.2.1		Supply	m	300		
C1.2.2		Install	m	300		
C1.2.3		Re-route existing cables	m	100		
C1.2.4		Joints	No.	8		
C1.2.5		Sealing cable ends	No.	8		
C1.2.6		Termination	No.	8		
C1.3		35mm² x 3 Core Cu armoured MV cable				
C1.3.1		Supply	m	600		

STELLENBOSCH
STELLENBOSCH • PNIEL • FRANSCHHOEK
MUNISIPALITEIT • UMASIPALA • MUNICIPALITY

ITEM NO	PAYMENT	DESCRIPTION	UNIT	QTY	RATE (incl. VAT)	Amount (incl. VAT)
Brought Forward						
C1.3.2		Install	m	600		
C1.3.3		Re-route existing cables	m	200		
C1.3.4		Joints	No.	8		
C1.3.5		Sealing cable ends	No.	8		
C1.3.6		Termination	No.	16		
		Armourred screened copper XLPE MV cable, complete with glands, K-clamps and lugs as specified. NOTE: For ordering of cables, measurement shall NOT be taken from this bill. Actual cable length shall be measured on site for ordering and installation purposes. Install cable according to SANS 10142 requirements .				
C1.4		**185mm² x 3 Core Cu armoured MV cable**				
C1.4.1		Supply	m	1		Rate Only
C1.4.2		Install	m	1		Rate Only
C1.4.3		Termination	No.	1		Rate Only
C1.5		70mm² x 3 Core Cu armoured MV cable				
C1.5.1		Supply	m	1		Rate Only
C1.5.2		Install	m	1		Rate Only
		Termination	No.	1		Rate Only
C1.6		35mm² x 3 Core Cu armoured MV cable				
C1.6.1		Supply	m	1		Rate Only
C1.6.2		Install	m	1		Rate Only
		Termination	No.	1		Rate Only
C2		**LV CABLES**				

STELLENBOSCH
STELLENBOSCH • PNIEL • FRANSCHHOEK
MUNISIPALITEIT • UMASIPALA • MUNICIPALITY

ITEM NO	PAYMENT	DESCRIPTION	UNIT	QTY	RATE (incl. VAT)	Amount (incl. VAT)
Brought Forward						
		Supply and install the following armoured PVC sheeted LV cables including terminations, glands, shroud, lugs, clamping, supports and all accessories. Note: For ordering of cables, measurement shall NOT be taken from this bill. Actual cable lengths shall be measured on site for ordering and installation purposes. Install cable according to SANS 10142 requirements with sand and danger tape.				
C2.1		240mm² x 4 Core Cu armoured LV cable				
C2.1.1		Supply	m	100		
C2.1.2		Install	m	100		
C2.1.3		Re-route existing cables	m	1		Rate Only
C2.1.4		Joints	No.	1		Rate Only
C2.1.5		Sealing cable ends	No.	1		Rate Only
C2.1.6		Termination	No.	4		
C2.2		185mm² x 4 Core Cu armoured LV cable				
C2.2.1		Supply	m	1		Rate Only
C2.2.2		Install	m	1		Rate Only
C2.3		120mm² x 4 Core Cu armoured LV cable				
C2.3.1		Supply	m	200		
C2.3.2		Install	m	200		
C2.3.3		Re-route existing cables	m	100		
C2.3.4		Joints	No.	6		
C2.3.5		Sealing cable ends	No.	4		
C2.3.6		Termination	No.	4		
C2.4		16mm² x 4 Core Cu armoured LV cable				

STELLENBOSCH
STELLENBOSCH • PNIEL • FRANSCHHOEK
MUNISIPALITEIT • UMASIPALA • MUNICIPALITY

ITEM NO	PAYMENT	DESCRIPTION	UNIT	QTY	RATE (incl. VAT)	Amount (incl. VAT)
Brought Forward						
C2.4.1		Supply	m	100		
C2.4.2		Install	m	100		
C2.4.3		Joints	No.	4		
C2.4.4		Termination	No.	4		
C3		**EARTH CABLES**				
		PVC insulated earth conductors. Supply and install.				
C3.1		150mm²	m	200		
C3.2		95mm²	m	1		
C3.3		70mm²	m	200		
C3.4		10mm²	m	100		
		PVC insulated earth conductors. Terminations				
C3.5		150mm²	No.	6		
C3.6		95mm²	No.	4		
C3.7		70mm²	No.	6		
C3.8		10mm²	No.	4		
C4		**LABELLING**				
C4.1		Complete labelling of cables	Sum	1		
C5		**CABLE ROUTE MARKERS**				
C5.1		Supply and install cable route markers as per Stellenbosch Municipality specifications (100 x 100 x 2mm Aluminium plate).				
C4.1.1		Supply	No	30		
C4.1.2		Install	No	30		
C5.2		Mark curb with "E". (Grind and paint)	No	20		
Total Carried Forward To Summary						

STELLENBOSCH
STELLENBOSCH • PNIEL • FRANSCHHOEK
MUNISIPALITEIT • UMASIPALA • MUNICIPALITY

BILL OF QUANTITIES
BILL 3: SUB-STATION EQUIPMENT

SECTION D: SWITCHROOM WORKS

ITEM NO	PAYMENT	DESCRIPTION	UNIT	QTY	RATE (incl. VAT)	Amount (incl. VAT)
D		**SWITCHROOM WORKS**				
D1		Galvanised mild steel support structure for steel grating grid				
D1.1		60 x 5 x 2.55kg/m flat subframe fixed to angle frame	t	2		
D1.2		60 x 60 x 8 x 7.09kg/m angle frame	t	2		
D1.3		75 x 50 x 6 x 5.65kg/m angle frame	t	1		
D1.4		M10 bolt, 100mm long including plugs where necessary	No	180		
D1.5		M16 bolt, 150mm long including plugs where necessary	No	30		
D2		**FIBREGLASS GRATINGS**				
		Fibretek GRP grating grid panels				
D2.1		38 x 38mm Moulded fibreglass grating	m²	37		
Total Carried Forward To Summary						

STELLENBOSCH
STELLENBOSCH • PNIEL • FRANSCHHOEK
MUNISIPALITEIT • UMASIPALA • MUNICIPALITY

BILL OF QUANTITIES
BILL 3: SUB-STATION EQUIPMENT

SECTION E: TRENCHING

ITEM NO	PAYMENT	DESCRIPTION	UNIT	QTY	RATE (incl. VAT)	Amount (incl. VAT)
E		**TRENCHING**				
E1		**EXCAVATION, FILLING, ETC.**				
E1.1		**Excavation in earth not exceeding 2m deep:**				
E1.1.1		Trenches	m³	300		
E1.1.2		Holes	m³	8		
E1.2		**Back excavation of vertical sides of excavation in all materials other than rock for working space including backfilling compacted to 98% MOD AASHTO maximum density**				
E1.2.1		Back excavation of vertical sides of excavation in all materials other than rock for working space including backfilling compacted to 98% Mod. AASHTO maximum density Not exceeding 500mm deep for erection and removal of formwork to strip footing, bases, ground beams, etc.	m²	60		
E1.3		Extra over trench and hole excavations in earth for excavation in: (Material classification to be verified on site before payment)				
E1.3.1		Extra over trench and hole excavations in earth for excavation in: (Material classification to be verified on site before payment) Soft rock	m³	30		
E1.3.2		Hard rock	m³	20		
E1.4		**Extra over trench and hole excavations in earth for breaking up and removing:**				
E1.4.1		Brickwork	m³	8		
E1.4.2		Unreinforced concrete	m³	8		
E1.4.3		Reinforced concrete	m³	8		

ITEM NO	PAYMENT	DESCRIPTION	UNIT	QTY	RATE (incl. VAT)	Amount (incl. VAT)
Brought Forward						
E1.5		**Extra over all excavations for carting away (no allowance made for increase in bulk)**				
E1.5.1		Surplus material from excavations and/or stock piles on site to a dumping site to be located by the contractor	m³	50		
E1.6		**Preventing risk of collapse of excavations:**				
E1.6.1		Sides of trench and hole excavations not exceeding 1,5m deep	m²	200		
E1.6.2		Sides of trench and hole excavations exceeding 1,5m deep	m²	55		
E1.7		**Keeping excavations free of water:**				
E1.7.1		Keeping excavations free of all water other than subterranean water (per location)	item	4		
E1.8		**Earth filling with approved material supplied and carted onto site by the contractor compacted to 98% Mod AASHTO density:**				
E1.8.1		Under floors, steps, pavings, etc.	m³	5		
		Backfilling to trenches, holes, etc.	m³	50		
E1.9		Earth filling with approved G5 material supplied and carted onto site by the contractor compacted to 98% Mod AASHTO density:				
E1.9.1		Under floors, steps, pavings, etc.	m³	15		
E1.10		**Compaction of surfaces:**				
E1.10.1		Compaction of ground surface under floors etc. by wetting and compacting with a vibratory roller	m²	90		

STELLENBOSCH
STELLENBOSCH • PNIEL • FRANSCHHOEK
MUNISIPALITEIT • UMASIPALA • MUNICIPALITY

ITEM NO	PAYMENT	DESCRIPTION	UNIT	QTY	RATE (incl. VAT)	Amount (incl. VAT)
Brought Forward						
E1.11		**Prescribed density tests on filling:**				
E1.11.1		Modified AASHTO Density test	No	19		
E1.12		**PROTECTION AGAINST TERMITES Apply 'Chlorodane' or 'Aldrin' or equivalent soil insecticides in strict accordance with manufacturers instructions and SABS 1165:**				
E1.12.1		Under floors, pavings, etc. including forming and poisoning shallow furrows against foundation walls etc., filling in furrows and ramming	m²	75		
E1.12.2		Bottom and sides of trenches	m²	120		
Total Carried Forward To Summary						

STELLENBOSCH
STELLENBOSCH • PNIEL • FRANSCHHOEK
MUNISIPALITEIT • UMASIPALA • MUNICIPALITY

BILL OF QUANTITIES
BILL 3: SUB-STATION EQUIPMENT

SECTION F: EXISTING EQUIPMENT

ITEM NO	PAYMENT	DESCRIPTION	UNIT	QTY	RATE	Amount R
F		**EXISTING EQUIPMENT**				
F1		Planning and coordination of a phased changeover of the MV and LV feeders of Blake Substation in order to ensure minimal outages and continuity of supply.	Sum	1		
F2		Liaison with utility for outage notices and any switching fees for all works associated with the substation relocation.	Sum	1		
F3		Removal and delivery of various MV panel sections, BTU and LV panels / kiosks to Stellenbosch Municipality stores.	No.	24		
F4		Removal and delivery of 500kVA free breathing transformer to Stellenbosch Municipality stores.	No.	1		
F5		Underground cable identification via approved calibrated ground penetrating instrument.	R/Hr	6		
Total Carried Forward To Summary						

STELLENBOSCH
STELLENBOSCH • PNIEL • FRANSCHHOEK
MUNISIPALITEIT • UMASIPALA • MUNICIPALITY

BILL OF QUANTITIES
BILL 3: SUB-STATION EQUIPMENT

SUMMARY OF SECTIONS

Section	Description	Amount R
3.1	SECTION A: PRELIMINARY AND GENERAL	
3.2	SECTION B: ELECTRICAL SWITCHGEAR & MV EQUIPMENT	
3.3	SECTION C: CABLES	
3.4	SECTION D: SWITCHROOM WORKS	
3.5	SECTION E: TRENCHING	
3.6	SECTION F: EXISTING EQUIPMENT	
	SUBTOTAL	

STELLENBOSCH
STELLENBOSCH • PNIEL • FRANSCHHOEK
MUNISIPALITEIT • UMASIPALA • MUNICIPALITY

BILL OF QUANTITIES
BILL 4: BUILDING WORKS

SECTION A: PRELIMINARY AND GENERAL

ITEM NO	PAYMENT	DESCRIPTION	UNIT	QTY	RATE (incl. VAT)	Amount (incl. VAT)
A1	**8,5**	SUMS STATED PROVISIONALLY BY ENGINEER				
A1.1	8.5(a) (i)	Decommissioning of existing building	Prov Sum	1	25 00	25 00
	8.5(a) (ii)	Overhead charges & profit on above item	%	25 000		
A1.2	8.5(b) (i)	Rerouting or protection of existing services	Prov Sum	1	15 000	15 000
	8.5(b) (ii)	Overhead charges & profit on above item	%	15 000		
A1.3	8.5(c) (i)	Material testing by commercial laboratories if required by engineer	Prov Sum	1	35 000	R35 000
	8.5 (c) (ii)	Overhead charges & profit on above item	%	35 000		
A1.2	8.5(b) (i)	Rerouting or protection of existing services	Prov Sum	1	15 000	15 000
	8.5(b) (ii)	Overhead charges & profit on above item	%	15 000		
A1.3	8.5(c) (i)	Material testing by commercial laboratories if required by engineer	Prov Sum	1	35 000	35 000
	8.5 (c) (ii)	Overhead charges & profit on above item	%	35 000		
Total Carried Forward To Summary						

STELLENBOSCH
STELLENBOSCH • PNIEL • FRANSCHHOEK
MUNISIPALITEIT • UMASIPALA • MUNICIPALITY

BILL OF QUANTITIES
BILL 4: BUILDING WORKS

SCHEDULE B: BUILDING WORKS

ITEM NO	PAYMENT	DESCRIPTION	UNIT	QTY	RATE (incl. VAT)	Amount (incl. VAT)
B1	**SANS 1200 C**	**SITE CLEARANCE** **EXISTING MINI-SUBSTATION BUILDING AND NEW MINI-SUBSTATION BUILDING**				
B1.1	8,2	**SCHEDULED ITEMS**				
B1.1.1	8.2.1	Clear and grub area for new structure	m²	175		
B1.1.2	8.2.7	Terminate & isolate electricity cables from existing building	m	6		
B1.1.3	8.2.8	Demolish and remove entire existing substation structure excluding concrete trenches, and foundations. This is to be confirmed on site with engineer.	m²	85		
		a) Allowance for the possibility of asbestos roof tiles.	m²			Rate Only
B1.1.4		OHS compliant sampling and laboratory tests for asbestos elements in the existing building.	Prov Sum	1	25 000	25 000
		Overhead charges and profit on Item B1.1.3	%	25 000		
B1.1.5	8.2.9	Transport materials and debris of existing structure to an apprvoved dump site identified by the contractor. Include haulage	m³.km	90		
B1.1.6	8.2.10	Remove topsoil of new structure to nomial depth of 150mm and stockpile for covering of existing structure platform	m³	30		
B1.2		**EXCAVATIONS, FILLING ETC**				

STELLENBOSCH
STELLENBOSCH • PNIEL • FRANSCHHOEK
MUNISIPALITEIT • UMASIPALA • MUNICIPALITY

ITEM NO	PAYMENT	DESCRIPTION	UNIT	QTY	RATE (incl. VAT)	Amount (incl. VAT)
Brought Forward						
B1.2.1		Excavations in earth not exceeding 2m deep: a) Trenches (material to be stockpilled for future back filling of new and old structure)	m³	160		
B1.2.2		Back excavation of vertical sides of excavation in all materials other than rock for working space including backfilling compacted to 98% Mod. AASHTO maximum density Not exceeding 500mm deep for erection and removal of formwork to strip footing, bases, ground beams, etc.	m²	25		
B1.2.3		Extra over trench and hole excavations in earth for excavation in: (Material classification to be verified on site before payment) a) Soft Rock	m³			Rate Only
		b) Hard rock	m³			Rate Only
B1.3		Shoring for Excavations: a) Sides of trench and hole excavations not exceeding 1,5m deep	m²	65		
		b) Sides of trench and hole excavations exceeding 1,5m deep	m²	15		
B1.4		Earth filling with approved material supplied and carted onto site by the contractor compacted to 98% Mod AASHTO density: Use stock piled material				

STELLENBOSCH
STELLENBOSCH • PNIEL • FRANSCHHOEK
MUNISIPALITEIT • UMASIPALA • MUNICIPALITY

ITEM NO	PAYMENT	DESCRIPTION	UNIT	QTY	RATE (incl. VAT)	Amount (incl. VAT)
Brought Forward						
		a) Under floors, steps, pavings, etc.	m³	45		
		b) Backfilling to trenches	m³	5		
B1.5		Earth filling with approved G5 material supplied and carted onto site by the contractor compacted to 98% Mod AASHTO density:				
		a) Under floors, steps, pavings, etc.	m³	10		
		b) Backfilling to trenches	m³	3		
Total Carried Forward To Summary						

STELLENBOSCH
STELLENBOSCH • PNIEL • FRANSCHHOEK
MUNISIPALITEIT • UMASIPALA • MUNICIPALITY

BILL OF QUANTITIES
BILL 4: BUILDING WORKS

SCHEDULE C: BUILDING CONSTRUCTION

ITEM NO	PAYMENT	DESCRIPTION	UNIT	QTY	RATE (incl. VAT)	Amount (incl. VAT)
C1	**SANS 1200 G**	**CONCRETE (structural)** **SUBSTATION BUILDING** **PREAMBLES** For preambles refer to "Model Preambles for Trades" and "SANS1200" as well as the Engineer's notes and specifications incorporated in the tender document **SUPPLEMENTARY PREAMBLES** Rates for items in their respective trades throughout this entire schedule of rates will be deemed to include for the necessary preliminary and general cost in its entirety as it may apply. The tenderer is referred to the pricing assumptions in part C2.1 in this document. The below list is not exhaustive: Prices for all items hereunder are deemed to include for the following: - scaffolding up to 2.5m high - work both inside and outside of existing buildings - carting all materials to work area to maximum 4 storeys high, whether internal or external - cleaning up of work area upon completion - protecting of existing premises - work in small quantities. Specifications, drawings, etc.:				

ITEM NO	PAYMENT	DESCRIPTION	UNIT	QTY	RATE (incl. VAT)	Amount (incl. VAT)
Brought Forward						
		Tenderers are referred to the specification accompanying these bills of quantities for the concrete, formwork and reinforcement work, for the full descriptions of the following items which are to be read and priced in conjunction with the said specification. Where there is conflict between the Model Preambles and the Specifications, the Specifications will take preference. Cost of tests: The costs of making, storing and testing of concrete test cubes as required under clause 7 "Tests" of SABS 1200 G shall include the cost of providing cube moulds necessary for the purpose, for testing costs and for submitting reports on the tests to the architect. The testing shall be undertaken by an independent firm or institution nominated by the contractor to the approval of the architect. Formwork: Descriptions of formwork shall be deemed to include use and waste only (except where described as "left in" or "permanent"), for fitting together in the required forms, wedging, plumbing and fixing to true angles and surfaces as necessary to ensure easy release during stripping and for reconditioning as necessary before re-use. Where smooth formwork of a degree of accuracy II for an off shutter concrete is measured, repairs to small imperfections such as small fins, bulges etc., shall be deemed to be included in				

STELLENBOSCH
STELLENBOSCH • PNIEL • FRANSCHHOEK
MUNISIPALITEIT • UMASIPALA • MUNICIPALITY

ITEM NO	PAYMENT	DESCRIPTION	UNIT	QTY	RATE (incl. VAT)	Amount (incl. VAT)
Brought Forward						
		the formwork rate for the smooth surfaces to receive paintworks or left as off shutter finish.				
C1.1	8,2	**FORMWORK**				
C1.1.1	8.2.1	Rough Horizontal :	m²			Rate Only
C1.1.2	8.2.1	Rough Vertical : a) Mini-sub plinth	m²	2,2		
C1.1.3	8.2.2	Smooth Horizonal:	m²			Rate Only
C1.1.4	8.2.2	Smooth Vertical				
		a) Staircase	m²	2		
C1.2	8,3	**REINFORCEMENT**				
C1.2.1	8.3.1	Steel Bars				
		a) Mild Steel Bars				
		i) 8mm	t	1,25		
		ii) 10mm	t	1,50		
C1.2.2	8.3.1	High-Tensile Steel Bars				
		i) 10mm	t	1,00		
		ii) 12mm	t	1,50		
		iii) 16mm	t	0,50		
		iv) 20mm	t	0,50		
C1.2.3	8.3.2	High-Tensile Welded Mesh				
		(Netto area measured - price to allow for 450mm overlaps)				
		a) Mesh ref 395				
		i) Surface Beds	m²	60		

		ii) Trenches	m²	15		
		iii) Minisub Slab	m²	14		
C1.3	**8,4**	CONCRETE				
C1.3.1	8.4.2	Blinding Layer in Grade 15/13:				
		a) Below footings (depending on geotech report)	m³			Rate only
C1.3.2	8.4.3	Screed/Strength in Grade 25/13 in:				
		a) In Cable Trenches	m³	2		
		b) Beam filling	m³	3		
C1.3.3	8.4.3	Strength Concrete grade 30/19 in:				
		a) Strip footings	m³	15		
		b) Surface beds	m³	10		
		c) Staircases	m³	5		
		d) 1 MVU minisub slab	m³	3		
C1.3.4	8.4.4	Unformed Surface Finishes				
		a) Wood-Floated Finishes for: i) Top of Cable Trenches	m²	15		
		b) Steel-Floated Finish for:				
		i) Top of Floor Slabs	m²	50		
		ii) Top of Staircase	m²	3		
		iii) Top of 1 MVU minisub slab	m²	7		
		iv) Top of staircase walkway	m²	12		

C1.3.5	PSG 8.4.7	Epoxy flooring to concrete				
		a) Apply 1.5-2mm thick layer of approved epoxy to top of floor slabs	m²	50		
C1.4	8,5	**JOINTS**				
C1.4.1		Supply and Install Joints to:				
	PSG 8.5	a) 2 layers malthoid between masonry and concrete interface	m	50		
		b) Vertical isolation joint in masonry wall, including 10mm joint filler, polyurethane sealant. Rate inclusive of all material and surface preparation	m	50		
		c) 4mm dp saw cut joint in the floor slabs (all inclusive)	m	5		
C1.5	8,6	**MANUFACTURE (OR SUPPLY) AND ERECT PRECAST ELEMENTS**				
C1.5.1	PS 8.6.1	Precast prestressed fabricated lintels a) 110x 75 mm lengths not exceeding 3m	No off.	12		
C1.5.2	PS 8.6.2	Precast slabs for covering existing cable terminations	m²	85		
C1.6	8,7	**GROUTING**				
C1.6.1		Grouting using SikaGrout 212 or simillar approved:				
		a) Grouting around all incoming sleeves	m³	0,50		
C2		**BUILDING WORKS**				

C2.1		**MASONRY** Brickwork to be in stretcher bond with class ii mortar. Brickforce to be provided in every 3rd layer of bricks and ties to be not less than 9 ties per sqm.				
C2.1.1		Brickwork of NFX bricks (14MPa nominal compressive strength) in class ii mortar				
		a) 280mm thick cavity walls	m²	25		
		b) 220mm thick walls	m²	10		
C2.1.2		Facebrick bricks (14MPa nominal compressive strength) in class ii mortar				
		a) 280mm thick cavity walls	m²	110		
		b) 220mm thick walls	m²	10		
		c) Closing 60mm cavity of hollow wall vertically with brickwork half brick wide	m	45		
C2.2		**WATERPROOFING:**				
C2.2.1		One layer of 375 micron "Gunplas Brickgrip" DPC at floor level for: a) 280 & 220mm thick cavity walls	m²	25		
C2.2.2		One layer of 250 micron "Gunplas U.S.B. Green" water proof sheeting sealed at laps with "Gunplas Pressure Sensitive Tape" for:				
		a) Under surface beds	m²	25		
		b) Under Trench Beds	m²	15		
		c) Under minisub slab	m²	14		
C2.3		**IRONMONGERY:**				

C2.3.1		Door stops: a) Rubber doorstop plugged to floor or wall	No	4		
		b) 100mm cabin hook & eye, including 70x70x20mm chamfered plate	No	4		
C2.4		**DOORS, LOUVERS & WINDOWS:**				
C2.4.1		Steel doors and frames:				
	PS-BW 01	a) Transformer Doors Type (xx) with louvers at the bottom of each door complete installation with full set of locks and keys	No	2		
C2.4.2		Steel Louvers:				
		a) 600x600 Steel flanged louvers	No	5		
C2.4.3		Burglar Bars:				
	PS-BW 02	a) Supply and install burglar bars to inside of louvres.	No	5		
C4.3.4		Gutters and Downpipes: All-inclusive rate				
	PS-BW 03	a) Supply and fix 100x76 mm Aluminum guttering with. Complete in all respects, rate to be all inclusive	m	45		
	PS-BW 04	b) Supply and fix 76x50 aluminum downpipes. Complete in all respects, rate to be all inclusive	m	20		
C2.5	PS-BW 05	Roof Structrue:				
		a) Design, supply, delivery and erect timber roof structure as per drawings. Complete in all respects.	m²	95		
		b) Supply and fix 0.56 mm Cliplock 700 (or	m²	95		

		equivalent concealed-fix profile) pre-painted galvanised steel roof sheeting, colour Battleship Grey, to the manufacturer's specification and according to drawings. Rate to be inclusive and complete in all respects.				
		c) Supply and install reflective sisalation foil under roof sheeting. Complete in all respects.	m²	95		
		d) Supply and fix 12.5 mm Rhinoboard fire-rated (Fireline) ceiling boards to roof structure. The ceiling system is to meet the fire rating required by SANS 10400-T and the client's specification. Complete in all respects.	m²	65		
		e) Supply and fix 75 mm Rhino cove cornice around the full perimeter of the ceiling, including adhesive, mitred corners, filling and painting. Complete in all respects.	m	35		
		f) Supply and install 2x layers 50 x 50 x 3 mm galvanised welded steel mesh (or 3 mm expanded metal) above the ceiling boards as an anti-theft barrier. Complete in all respects.	m²	65		
		g) Supply and fix timber fascia and barge boards. Complete in all respects.	m	35		
C2.6		**PLASTERING:**				
C2.6.1		Internal plaster:				
		a) 15mm thick cement plaster with steel trowel finish	m²	130		
C2.7		**PAINTING:**				

		All paint complete with undercoat, primer etc. to be used in accordance with the manufacturer's specifications. Colour to be approved by client.				
C2.7.1		On metal:				
		Steel Doors & Frames:				
		a) Prepare and apply 1 x coat undercoat and 2 x coats Plascon high gloss enamel paint or similar approved	m²	10		
		Steel Louvers and Frames:				
		b) Prepare and apply 1 x coat undercoat and 2 x coats Plascon high gloss enamel paint or similar approved	m²	2		
C2.7.2		On plastered walls:				
		a) Internal walls - Prepare and apply 1 x coat universal undercoat and 2 x coats Plascon Velvaglo	m²	130		
		b) External walls - Prepare and apply 2 x coats Dulux Brick Dressing Gloss or similar approved	m²	110		
C2.8		MISCELLANEOUS:				
	PS-BW 06	Electrical Security Fence				
		a) Supply and install electric security fence around the minisub station building. Complete in all respects.	m	60		

	PS-BW 07	Water Faucet b) Supply and install chrome-plated or brass bib tap. Complete in all respects.	No.	1		
	PS-BW 08	Fire Extinguishers c) Supply and install portable fire extinguishers. Complete in all respects.	No.	4		
C3	**SANS 1200 HA**	**STRUCTURAL STEELWORK (SUNDRY ITEMS)**				
	8.3.1	Structural Steel a) 40x40x4mm thick equal leg angle installed as edge protection between removable steel stanchions - refer to detail 03 drawing 34092.02-203-01	m	6		
C3.1	8.3.2	Handrails a) Handrail complete assembly as shown on drawings.	m	8		
		b) Handrail complete assembly with removable stanchions as shown on drawings	m	5		
	8.3.3	Welded trench ladder 450x800 deep. 50mm Diameter galvanized steel vertical bars welded to 100 x 100mm galvanized fixing plates with 20mm diameter galvanized steel cross bars fixed to vertical bars and fixing plates anchored to trench wall with M12 chemical anchor bolts	No	3		
C3.2	8.3.4	Flooring, Complete and Installed with frames a) Floorplate Floors - Mentis Steel Grating with				

		40x40x6mm thick Angle Welded to plate and a 40x40x6mm thick angle bolted to wall for Cable Trench for complete installation. Refer to drawing 34092.02-203-01	m²	14		
C3.3	8.3.5	Clear-Vu Fencing a) 2.1m high Clear-Vu fencing surrounding building (inclusive supply and install rate)	m	60		
		b) 2.1m high Clear-Vu fencing access control security gates installed (inclusive supply and install rate)	No.	2		
Total Carried Forward To Summary						

STELLENBOSCH
STELLENBOSCH • PNIEL • FRANSCHHOEK
MUNISIPALITEIT • UMASIPALA • MUNICIPALITY

BILL OF QUANTITIES
BILL 4: BUILDING WORKS

SECTION D: LV INSTALLATION

ITEM NO	PAYMENT	DESCRIPTION	UNIT	QTY	RATE	Amount R
D		**LV INSTALLATION** **Cable installation to include scaffolding and ladders, power and hand tools, consumables and preparation works to install and fix conductors in position.**				
D1		**600/1000V, PVC/PVC/SWA/PVC, LV CABLES - Supply and installation in cable way, excluding termination and connections:**				
D1.1		6mm², 2 core, copper conductors	m	20		
D1.2		16mm², 2 core, copper conductors	m	20		
D1.3		6mm², 4 core, copper conductors	m	20		
D2		**600/1000V, PVC/PVC/SWA/PVC, LV CABLES - Termination and connection, including gland, shroud and lugs:**				
D2.1		6mm², 2 core, copper conductors	No	4		
D2.2		16mm², 2 core, copper conductors	No	4		
D2.3		6mm², 4 core, copper conductors	No	2		
D3		**SINGLE CORE PVC 600/1000V GENERAL PURPOSE WIRE - Supply and installation in cableway including termination and connections:**				
D3.1		1,5mm², 1 core, copper conductors	m	500		
D3.2		2,5mm², 1 core, copper conductors	m	800		
D3.3		4,0mm², 1 core, copper conductors	m	150		

ITEM NO	PAYMENT	DESCRIPTION	UNIT	QTY	RATE (incl. VAT)	Amount (incl. VAT)
Brought Forward						
D4		**ELECTRICAL LUMINAIRES - Supply and installation into building, including fastners, and fixing to ceiling or outside walls: (This include ladders and or scaffolding, power and hand tools, consumables and preparation works required for the installation.)**				
D4.1		NORDLAND JBA 265 2x58W or BEKA VAPOURLINE 2x58W Fluorescent, Surface Mounted Light Fittings or Equal and Similar Approved	No	6		
D4.2		"EMERGENCY VERSION of NORDLAND JBA 265 2x58W or BEKA VAPOURLINE 2x58W Fluorescent, Surface Mounted Light Fittings or Equal and Similar Approved	No	2		
D4.3		BEKA BULK Outdoor Luminaire, Surface Mounted, 2x18W or Equal and Similar Approved	No	8		
D4.4		Regent SOLO Bulkhead Fitting, LM 6 Die Cast & Powder Coated, complete with UV Stabilized high impact opal diffuser and fitted with E27, 1 x 18W CFL lamps or Equal or Similar Approved	No	2		
D4.5		50W, coastal rating die-cast aluminium LED floodlight complete with wall mount bracket and galvanised steel vandalproof cage.	No	2		

STELLENBOSCH
STELLENBOSCH • PNIEL • FRANSCHHOEK
MUNISIPALITEIT • UMASIPALA • MUNICIPALITY

ITEM NO	PAYMENT	DESCRIPTION	UNIT	QTY	RATE (incl. VAT)	Amount (incl. VAT)
Brought Forward						
D5.1		Photo Cell to be supplied complete in empty bulkhead fitting. 16A, 250V rated.	No	1		
D6		**LIGHT SWITCHES - Supply and installation into wall, including chasing, fixing, corking and making good after installation: (This include ladders and or scaffolding, power and hand tools, consumables and preparation works required for the installation.)**				
D6.1		1 Lever, 1 Way Light Switch to be from the Crabtree Diamond range.	No	2		
D6.2		2 Lever, 1 Way Light Switch to be from the Crabtree Diamond range.	No	2		
D7		**SSO (PLUG OUTLETS) - Supply and installation into wall, including chasing, fixing, corking and making good after installation: (This include ladders and or scaffolding, power and hand tools, consumables and preparation works required for the installation.)**				
D7.1		3 Pin, Double Switched Socket Outlet to be from the Crabtree Diamond range.	No	6		
D7.2		3 Pin, Dedicated Double Switched Socket Outlet (Red) to be from the Crabtree Diamond range.	No	6		
D7.3		3 Pin, 16A, Watertight Single Switched Socket Outlet to be from the Crabtree range. Equal or Similar Approved	No	2		
D8		**ISOLATOR - Supply and installation into wall, including chasing, fixing, corking and making good after installation: (This include ladders and or scaffolding, power and hand tools, consumables and preparation works required for the installation.)**				

STELLENBOSCH
STELLENBOSCH • PNIEL • FRANSCHHOEK
MUNISIPALITEIT • UMASIPALA • MUNICIPALITY

ITEM NO	PAYMENT	DESCRIPTION	UNIT	QTY	RATE (incl. VAT)	Amount (incl. VAT)
Brought Forward						
D8.1		20A DP Isolator from GEWISS, Rotary and Lockable. Equal or Similar Approved	No	6		
D8.2		20A TP Isolator from GEWISS, Rotary and Lockable. Equal or Similar Approved	No	2		
Total Carried Forward To Summary						

STELLENBOSCH
STELLENBOSCH • PNIEL • FRANSCHHOEK
MUNISIPALITEIT • UMASIPALA • MUNICIPALITY

BILL OF QUANTITIES
BILL 4: BUILDING WORKS

SECTION E: WIREWAYS

ITEM NO	PAYMENT	DESCRIPTION	UNIT	QTY	RATE	Amount R
E		**WIREWAYS** Supply and installation, including all material and equipment required to be fixing wireways into position. (This include scaffolding, ladders, power tools, hand tools, all consumables and cleaning up.)				
E1		**CABLE TRAY / WIRE WAY - Cable Tray 50mm High and to be constructed using welded wire mesh. Cable tray to be Hot Dipped Galvanised** 600mm				
E1.1		Straight lengths of Cable Tray	m	30		
E1.2		Cable tray bends (90 Degree bends, Tee pieces, and risers) 400mm	No.	2		
E1.3		Straight lengths of Cable Tray	m	20		
E1.4		Cable tray bends (90 Degree bends, Tee pieces, and risers)	No.	2		
E2		600mm heavy duty cable ladder	m	40		
E3		**PVC CONDUIT AND PVC OUTLET BOXES**				
E3.1		20mm White Electrical PVC Conduit	m	168		
E3.2		25mm White Electrical PVC Conduit	m	168		
E3.3		32mm White Electrical PVC Conduit	m	84		
E3.4		50mm White Electrical PVC Conduit	m	42		

STELLENBOSCH
STELLENBOSCH • PNIEL • FRANSCHHOEK
MUNISIPALITEIT • UMASIPALA • MUNICIPALITY

ITEM NO	PAYMENT	DESCRIPTION	UNIT	QTY	RATE (incl. VAT)	Amount (incl. VAT)
Brought Forward						
E3.5		50mm DIA Round Box, 1 way, flush mounted	No	70		
E3.6		50mm DIA Round Box, 2 way, flush mounted	No	70		
E3.7		50mm x 100mm Rectangular Box, flush mounted	No	7		
E3.8		100mm x 100mm Square Box, flush mounted	No	28		
E3.9		Blanking plate for 50mm x 100mm Flush Mounted Box, including fixing screws	No	7		
E3.10		Blanking plate for 100mm x 100mm Flush Mounted Box, including fixing screws	No	21		
E4		**GALVANISED STEEL CONDUIT AND OUTLET BOXES**				
E4.1		20mm GS Electrical Conduit	m	50		
E4.2		25mm GS Electrical Conduit	m	50		
E4.3		32mm GS Electrical Conduit	m	30		
E4.4		50mm DIA Round Box, 1 way, flush mounted	No	15		
E4.5		50mm DIA Round Box, 2 way, flush mounted	No	5		
Total Carried Forward To Summary						

STELLENBOSCH
STELLENBOSCH • PNIEL • FRANSCHHOEK
MUNISIPALITEIT • UMASIPALA • MUNICIPALITY

BILL OF QUANTITIES
BILL 4: BUILDING WORKS

SECTION F: EARTHING

ITEM NO	PAYMENT	DESCRIPTION	UNIT	QTY	RATE (incl. VAT)	Amount (incl. VAT)
F		**EARTHING INSTALLATION**				
F1		**COPPER CONDUCTOR - 10mm Diameter, Black Annealed Copper**				
F1.1		10mm Diameter, Black Annealed Copper - Supply and install.	m	56		
F2		**COPPER CONDUCTOR - Standard Earth Rod, 2.4m Long, 16mm Diameter (This include ladders and or scaffolding, power and hand tools, consumables and preparation works required for the installation.)**				
F2.1		Standard Earth Rod, 2.4m Long, 16mm Diameter - Supply and delivery only:	No	9		
F2.2		Standard Earth Rod, 2.4m Long, 16mm Diameter - Installation Only:	No	9		
F3		**COPPER CONDUCTOR - 50mm x 3mm Earth Strap to Earth Busbar**				
F3.1		50mm x 3mm Earth Strap - Supply and Delivery Only:	m	42		
F3.2		50mm x 3mm Earth Strap - Installation only: (This include ladders and or scaffolding, power and hand tools, consumables and preparation works required for the installation.)	m	42		
F3.3		Fixing to Substation Earth bar installed under earth bar cover. Including all required bolts, washers and nuts.	No	6		
F4		**BONDING OF CONDUCTORS** All joints shall be exothermically welded, or oxy-acetylene brazen using a 3mm diameter silbralloy				

STELLENBOSCH
STELLENBOSCH • PNIEL • FRANSCHHOEK
MUNISIPALITEIT • UMASIPALA • MUNICIPALITY

ITEM NO	PAYMENT	DESCRIPTION	UNIT	QTY	RATE (incl. VAT)	Amount (incl. VAT)
Brought Forward						
		brazing rods or equivalent. No flux required. This rate to include all relevant electrical, gas, power and hand tools so successfully complete any of the connections as mentioned in the list below. Connections indicated below to INCLUDE ALL relevant equipment, materials and consumables to cater for the entire process of joining. No of joints does not differentiate between the number and type of connections involved.				
F4.1		Exothermic Welded connection	No	34		
F4.2		Oxy-Acetylene brazen using a 3mm diameter silbralloy brazing rods	No	9		
F4.3		Clamping of conductors with appropriate clamps	No	34		
F5		**EARTH CONDUCTORS - Supply and installation in cable trench, wire way or on cable latter/tray including all fixing equipment, ladders, scaffolding and consumables to fix earth conductor, but exclude trenching and backfilling.**				
F5.1		10mm², Bare Copper Earth Conductor	No	90		
F5.2		16mm², Bare Copper Earth Conductor	No	60		
F5.3		70mm², Bare Copper Earth Conductor	No	60		
F6		**EARTH MAT**				
F6.1		Earth Mat of 2m x 1m with a 300mm grid shall be installed 0,5m below ground. Install 4 x 2.4m M16 Earth Rods at each corner of the earth mat. An earth reading of 3 ohms or less required. As per Stellenbosch Municipality specifications.	No	1		
Total Carried Forward To Summary						

STELLENBOSCH
STELLENBOSCH • PNIEL • FRANSCHHOEK
MUNISIPALITEIT • UMASIPALA • MUNICIPALITY

BILL OF QUANTITIES
BILL 4: BUILDING WORKS

SECTION G: FIRE DETECTION

ITEM NO	PAYMENT	DESCRIPTION	UNIT	QTY	RATE (incl. VAT)	Amount (incl. VAT)
G		**FIRE DETECTION** **Include all scaffolding, ladders, power tools, hand tools and all consumables to install the fire devices to the correct location as indicated**				
G1		**Addressable Fire Panel with User Interface, 4 loop, (English international) complete with mounting base. Similar or Equal Approved to Ziton**				
G1.1		Supply and installation of Fire Panel	No	1		
G2		**Optical Smoke Detector, including Base (Ziton ZP730-2) Similar or Equal Approved**				
G2.1		Supply and Installation of Optical Smoke Detector point	No	3		
G3		**Line Relay**				
G3.1		Supply and Installation of Line Relay	No	1		
G4		**Battery Pack, 12V, 20Ah**				
G4.1		Supply and Installation of Battery Pack	No	1		
G5		**Red Manual Call Point, complete with surface mounting box with earth connection, Resettable element and Hinged Cover. Ziton or Equal Approved**				
G5.1		Supply and Installation of Manual Call point	No	2		
G6		**Omnidirectional Sounder Beacon, Red, 102dBA, complete with Red, Plugable base. Ziton or Equal Approved**				

STELLENBOSCH
STELLENBOSCH • PNIEL • FRANSCHHOEK
MUNISIPALITEIT • UMASIPALA • MUNICIPALITY

ITEM NO	PAYMENT	DESCRIPTION	UNIT	QTY	RATE (incl. VAT)	Amount (incl. VAT)
Brought Forward						
G6.1		Supply and Installation of Sounder Beacon	No	2		
G8		**FIRE DETECTION PANEL - 24V DC, 1A Power Supply.**				
G8.1		Supply and Installation of Power Supply	No	1		
G9		**FIRE DETECTION PANEL - Fire Retardant cable, 1mm², 2-core. PH30**				
G9.1		Fire Retardant cable, 1mm², 2-core - Supply and Installation of fire retardant cable into conduit.	m	60		
Total Carried Forward To Summary						

STELLENBOSCH
STELLENBOSCH • PNIEL • FRANSCHHOEK
MUNISIPALITEIT • UMASIPALA • MUNICIPALITY

BILL OF QUANTITIES
BILL 4: BUILDING WORKS

SECTION H: GENERAL

ITEM NO	PAYMENT	DESCRIPTION	UNIT	QTY	RATE (incl. VAT)	Amount (incl. VAT)
H		**GENERAL / TESTING AND COMMISSIONING**				
H1		**Commissioning and training to specification**				
H1.1		Testing and commissioning of all equipment including testing off site and on site as specified	No	1		
H1.2		System operation demonstration and training	No	1		
H1.3		Compliance certificate for the associated electrical installation	No	1		
H1.4		One-year maintenance and guarantee including 3 services	No	1		
H1.5		Any other labour equipment, materials, etc., to hand over a complete functional installation in terms of the specification	No	1		
H1.6		Allowance for additional earthing	No	1		
H1.7		Allowance for switch-off by Stellenbosch Municipality	No	1		
H2		**DRAWINGS, MANUALS, ETC.**				
H2.1		Drawings, manuals, etc.				
H2.1.1		Provide "as-built" shop drawings of installed equipment per installation (Three sets)	Sum	1		
H2.1.2		Provide operating and maintenance manuals of installed equipment per installation (Three sets)	Sum	1		
Total Carried Forward To Summary						

STELLENBOSCH
STELLENBOSCH • PNIEL • FRANSCHHOEK
MUNISIPALITEIT • UMASIPALA • MUNICIPALITY

BILL OF QUANTITIES
BILL 4: BUILDING WORKS

SECTION I: MECHANICAL

ITEM NO	PAYMENT	DESCRIPTION	UNIT	QTY	RATE	Amount R
I		**MECHANICAL INSTALLATION**				
I1		**FANS**				
		Supply and install fan fittings and equipment				
I1.1		Extractor fans	No	1		
I1.2		900 Litres/second at 300 Pa supply air fan	No	1		
I1.3		RWC temperature controllers	No	1		
I1.4		50VA 220/24 VAC Transformers	No	1		
I1.5		Control panels for controllers	No	1		
I1.6		Thermometer sockets with thermometers	No	1		
I1.7		Transformation pieces	No	1		
I2		**DUCTING, SUPPLY AND EXTRACT SYSTEM**				
		Supply and installation of new supply air spigot complete with ducting, grille with OBD, cut in and balancing				
I2.1		Straight duct, width or height not exceeding 750mm and sum of two adjacent sides not exceeding 1.15m	No	1		
I2.2		600 x 130mm Supply air grill complete with OBD	No	1		
I2.3		Sound attenuators to suite installed onto ducting and extract fan system	No	1		
I2.4		Transformation piece square to round to suite	No	1		
I2.5		Extract air grille complete with OBD	No	1		
I3		**GENERAL / TESTING AND COMMISSIONING**				

STELLENBOSCH
STELLENBOSCH • PNIEL • FRANSCHHOEK
MUNISIPALITEIT • UMASIPALA • MUNICIPALITY

ITEM NO	PAYMENT	DESCRIPTION	UNIT	QTY	RATE (incl. VAT)	Amount (incl. VAT)
Brought Forward						
		Commissioning and training to specification				
I3.1		Testing and commissioning the installation	No	1		
I3.2		Operating and maintenance manuals of extractor fans	No	1		
I4		**DRAWINGS, MANUALS, ETC.**				
		Drawings, manuals, etc.				
I4.1		A1 "As-built" drawing prints	No	1		
I4.2		A3 "As-built" drawing prints	No	1		
Total Carried Forward To Summary						

STELLENBOSCH
STELLENBOSCH • PNIEL • FRANSCHHOEK
MUNISIPALITEIT • UMASIPALA • MUNICIPALITY

BILL OF QUANTITIES
BILL 4: BUILDING WORKS

SUMMARY OF SECTIONS

Section	Description	Amount (incl. VAT)
4.1	SCHEDULE B: BUILDING WORKS	
4.2	SCHEDULE C: BUILDING CONSTRUCTION	
4.3	SECTION D: LV INSTALLATION	
4.4	SECTION E: WIREWAYS	
4.5	SECTION F: EARTHING	
4.6	SECTION G: FIRE DETECTION	
4.7	SECTION H: GENERAL	
4.8	SECTION I: MECHANICAL	
	SUBTOTAL	

STELLENBOSCH
STELLENBOSCH • PNIEL • FRANSCHHOEK
MUNISIPALITEIT • UMASIPALA • MUNICIPALITY

BSM 21/27: MAIN ROAD INTERSECTION IMPROVEMENTS: STRAND / ADAM TAS / ALEXANDER SUMMARY			
DESCRIPTION			**AMOUNT (INCL.VAT)**
CIVIL WORKS			
SCHD 1	A	PRELIMINARY AND GENERAL	
SCHD 1	B	SITE CLEARANCE	
SCHD 1	C	EARTHWORKS	
SCHD 1	D	CABLE DUCTS	
SCHD 1	E	STORMWATER (ROAD DRAINAGE)	
SCHD 1	F	BULK STORMWATER	
SCHD 1	G	SUBBASE	
SCHD 1	H	KERBING AND CHANNELING	
SCHD 1	I	BASE	
SCHD 1	J	ASPHALT BASE AND SURFACING	
SCHD 1	K	SEGMENTED PAVING	
SCHD 1	L	ANCILLARY ROADWORKS	
SCHD 1	M	MEDIUM PRESSURE PIPELINES	
SCHD 1	N	SEWERS	
SCHD 1	O	TRAFFIC SIGNALS	
NEW ELECTRICAL SUB-STATION			
SCHD 2	E1	ELECTRICAL STREET LIGHTS	
SCHD 3	E2	ELECTRICAL SUB-STATION (EQUIPMENT)	
SCHD 4	E3	ELECTRICAL SUB-STATION (BUILDING)	
		SUBTOTAL (INCL. VAT)	
		ADD 15% CONTINGENCIES	
		TOTAL (INCL. VAT)	

STELLENBOSCH
STELLENBOSCH • PNIEL • FRANSCHHOEK
MUNISIPALITEIT • UMASIPALA • MUNICIPALITY

Part C3: Scope of Work

Pages

C3.1 Description of the Works 264

C3.2 Engineering / Design 268

C3.3 Procurement 272

C3.4 Construction 273

C3.5 Management 377

C3.6 Annexes 385

Status

Should any requirement or provision in the parts of the Scope of Work conflict with any requirement of any Standardised Specification, particular specification or any drawings, the order of precedence, unless otherwise specified, is:

Drawings
Scope of Work
Particular Specifications
SANS Standardised Specifications

STELLENBOSCH
STELLENBOSCH • PNIEL • FRANSCHHOEK
MUNISIPALITEIT • UMASIPALA • MUNICIPALITY

C3.1 Description of the Works

CONTENTS

3.1.1 EMPLOYER'S OBJECTIVES
3.1.2 OVERVIEW OF THE WORKS
3.1.3 EXTENT OF THE WORKS
3.1.4 LOCATION OF THE WORKS
3.1.5 TEMPORARY WORKS

3.1.1 EMPLOYER'S OBJECTIVES

The employer's objective is to upgrade the existing Adam Tas Road (R310) and Strand Road (44) intersection as well as to incorporate the Alexander Street junction with the main intersection to service all future development in the Area. This will include the re-alignment of the existing Alexander Street junction to form a new Alexander Street leg of the main intersection. The works shall also include the demolish the existing electrical sub-station and construction of a new electrical substation on a new location to complement the new Alexander Street leg of the intersection.

The upgrade and rehabilitation of the intersections shall be done on the Reginal and primary district distributer roadways through Stellenbosch. The R44 and R310 being Class 2 roadways is under the jurisdiction of Western Cape Provincial road branch, which is the Regulatory Authority (RA) whereas Stellenbosch Municipality the Approval Authority (AA).

The R44 and R310 form an integral part of the provincial road networks and mobility as well as traffic progress should be maintained through the route. The route furthermore forms part of the provincial emergency escape plan and is critical to maintenance effective traffic flow.

Alexander Street forms the integral link between Bird Street and the R44 and R310. Alexander Street being classified as a Class 4 local distributor roadway which facilitate traffic from the Stellenbosch CBD onto the R310 and R44.

The project is co-funded by the Western Cape Government: Roads branch and directorate.

3.1.2 OVERVIEW OF THE WORKS

The Scope of Works will include the following:

- Re-configuration of the existing staggered intersection of R44 (Stand Road) with R310 (Adam Tas Road) and junction with Alexander Street situated in Central Stellenbosch.
- Improve geometrical configuration of intersection to a combined and integrated single intersection.
- Improve sight distances, stopping distances and optimization of the traffic singulation (completely new installation).
- Alteration to existing underground infrastructure services (Water, Foul Sewer, communications, and Stormwater drainage).
- Close current Alexander Street junction with R310, which shall be incorporated into the

combined intersection.

- Construction of new Street Lights to compliment the new geometrical road alignment and intersection layout.
- New NMT walkways and structured roadway crossings to facilitate pedestrian movement from Alexander Street, Strand Road and along Adam Tas Road towards the existing railway station.

- Provision to reinstate landscaping (combination of hard, soft landscaping and new trees) to complement the new road alignments.

- Associated temporary traffic management during construction activities to allow uninterrupted traffic flow.

- Re-locate the existing electrical sub-station to accommodate new west-to-east slip lane onto Alexander Street. Includes costs for demolishment, reinstatement of area, new building construction, cable joint and extension, new switchgear, access roadway, yard area, perimeter security fence and vehicle access gates.

3.1.3 EXTENT OF THE WORKS

The Extent of the Construction Works consist of the following:

NEW ELECTRICAL SUB-STATION (ALEXANDER STREET)

- Construction of 7.5m by 12.0m (± 90 m^2) building footprint.
- Construction of bulk earthworks platform and levelling pad for building footprint.
- Construction of reinforced concrete footings and foundations.
- Construction of reinforced concrete columns.
- Construction of reinforced concrete floor slab.
- Construction of reinforced concrete roof slab.
- Construction of structural timber roof trusses and roof metal sheeting.
- Construction of subsoil drainage around building.
- Construction of pipework and ducts for bulk underground electrical cabling.
- Construction of pipework for water connection, foul sewer connection and stormwater drainage.
- Construction of new concrete block paved parking and movement area around building, parking area and access roadway.
- Installation of new electrical switchgear and MCC.
- Installation of new electrical lights, alarm system, telemetry system, communication systems, etc.

- Installation of new bulk MV and HV underground caballing from the existing building footprint to the new building location.

- Installation of new perimeter fence (2.1m high clear-vu or equal approved product), pedestrian gate and double swing vehicle access gate.

EXISTING ALEXANDER STREET JUNCTION ONTO ADAM TAS ROAD (R310)

Roadworks

- Demolish existing asphalt surfacing between 40mm to 100mm thickness and spoil from site.

- Rip and remove existing base layer, assumed 150mm thickness and re-use as sub-base layer to the new sidewalk area on site.

- Construction of new 200mm thick topsoil layer to complement new landscaping area across existing roadway footprint area.

- Construction of soft landscaping in the form of grass and trees across the existing roadway footprint.

NEW ALEXANDER STREET LEG OF MAIN INTERSECTION

Roadworks

- Construction of new roadway consisting of 3No 3.7m wide lanes at 110m length.

- Construction of pre-fabricated concrete kerbs and channels for approximately 250m.

- Construction of ± 1200 m^2 base layer with imported materials.

- Construction of ± 1350 m^2 sub base (upper and lower) with imported materials.

- Construction of ± 1350 m^2 subgrade layer (imported) with imported materials.

- Construction of new road markings and road signage.

- Construction of new sidewalks and edgings. Construction of vehicle access embayment to provide access to the retirement home.

- Construction of new 1200mm (W) x 600mm (H) rectangular stormwater portals, inclusive of pre-cast base slabs for ± 125m.

- Construction of ± 7No stormwater catchpits and kerb inlets, 4No stormwater manholes and stormwater pipes of ± 85m (450mm diameter to 600mm diameter).

- Construction of ± 220m of new subsoil drainage and 4No sub-soil manholes.

- Installation of new traffic signals and detection.

- Lowering and raising of existing foul sewer manholes.

- Construction of ± 300m of new communication ducts and drawpits.
- Construction of ±105 m^2 concrete cover slabs to protect joints in underground MV and HV cables.
- Construction of new LV cables and street lights.
- Construction of new soft and hard landscaping of road verge areas and central traffic island.

3.1.4 LOCATION OF THE WORKS

The intersection is situated in the Stellenbosch CBD (Western side) and abutted by the PRASA Passenger railway line reserve and siding on the western boundary.

The roadworks is planned to take place on the current intersection road surface with the construction of the additional lanes and new roadway sections.

The intersection is situated within the registered road reserve and no formal land expropriation is required. Works shall take place in a densely development area with residential units and commercial buildings in close proximity to the Works.

Access to the site can be taken from Alexander Street, Du Toit Street, Adam Tas Road (R310) and Strand Road (R44).

3.1.5 TEMPORARY WORKS

The following temporary works will be required during the construction process on parts of a construction project that are needed to enable the permanent works to be built:

- Temporary barricading around the construction site to manage construction portions and phased construction.
- Temporary access road and temporary traffic deviation.
- Partial lane closures for the duration of the works, with temporary traffic lights in place to control traffic flow and traffic management.
- Temporary traffic management plan and traffic channelization to ensure continuous traffic flow, progression and mobility along the major routes (Strand Road and Adam Tas Road).
- Road and street weeping, with dust, rubble and dirt management throughout the course of the construction period.
- Speed management, whereas temporary vehicles used as components of the Temporary Traffic Control (TTC) zones for mobile operations (portable changeable message signs). Appropriately coloured and marked vehicles with signs, flags, high-intensity rotating, flashing, oscillating, or strobe lights, truck-mounted attenuators, and arrow panels or portable changeable message signs may follow a train of moving work vehicles.
- Since intermediate-term operations extend into nighttime, retroreflective and/or illuminated devices shall be used in intermediate-term stationary TTC zones.

- Temporary Guidance: Remove and apply appropriate road markings in long-term stationary TTC zones and replaced with temporary markings and temporary traffic barriers.

- Temporary area Lighting which includes inter alia temporary roadway lighting, steady-burn lights used with channelizing devices, flashing lights for isolated hazards Illuminated signs and Floodlights.

- For all pedestrian or bicycle usage areas around and through the construction works areas, temporary signage and guidance elements shall be provided to give particular attention to the provisions to facilitate movements, accessibility and detectability provisions in TTC zones.

C3.2 Engineering / Design

CONTENTS

3.2.1 DESIGN SERVICES AND ACTIVITY MATRIX
3.2.2 EMPLOYER'S DESIGN
3.2.3 DESIGN BRIEF
3.2.4 DRAWINGS

3.2.1 DESIGN SERVICES AND ACTIVITY MATRIX

a) The Employer is responsible for the design of the permanent Works as reflected in the Contract Documents unless otherwise stated.

b) The Contractor is responsible for the design of the temporary Works for the temporary access road.

3.2.2 EMPLOYER'S DESIGN

The permanent works included in this contract has been designed by the Employer. The detail of the works is indicated on the drawings and in the specifications. The Tenderer may submit alternative offers for designs prepared by him subject to the conditions specified in the Contract Data.

3.2.3 DESIGN BRIEF

The Contractor shall be responsible for the design of the temporary Works as defined in C3.2.1(b).

3.2.4 DRAWINGS

The Contractor shall use only the dimensions stated in figures on the Drawings in setting out the Works, and dimensions shall not be scaled from the Drawings, unless required by the Engineer. The Engineer will, on the request of the Contractor in accordance with the provisions of the Conditions of Contract, provide such dimensions as may have been omitted from the Drawings.

The Contractor shall ensure that accurate as-built records are kept of all infrastructure installed or relocated during the Contract. The position of pipe bends, junction boxes, duct ends and all other underground infrastructure shall be given by either co-ordinates, or stake value and offset. Where necessary, levels shall also be given. A marked-up set of drawings shall also be kept and updated by the Contractor. This information shall be supplied to the Engineer's Representative on a regular basis.

All information in possession of the Contractor, required by the Engineer and/or the Engineer's Representative to complete the as-built/record drawings, must be submitted to the Engineer's Representative before a Certificate of Completion will be issued.

The Drawings prepared by the Employer for the permanent Works are listed in the Book of Drawings (Volume 4) and are issued for tendering purposes. They are issued separately to this document and must be regarded as provisional and preliminary for Tenderers to generally assess the scope of work.

The Contractor shall be entitled to receive free of charge, three full size A0 copies of each such drawings and to receive, at the cost of reproduction, such additional copies as he shall reasonably require.

One copy of all drawings shall be kept on the Site and be available for perusal by the Engineer or any person authorised by him.

The Contractor shall, in accordance with the Engineer's instructions, maintain a register on the Site of all drawings and revisions thereof in the chronological order in which they are delivered to him.

At commencement of the contract, the Engineer shall deliver to the Contractor copies of the drawings for construction purposes and any instructions required for the commencement of the works. Further drawings detailing reinforcement and bending schedules for the concrete chambers will be issued after Contract Commencement. From time to time thereafter during the progress of the works, the Engineer will issue further drawings as may be necessary for adequate construction, completion and defects correction of the works. The work shall be carried out in accordance with the latest available revision of the drawings

The Employer reserves the right to issue amended and/or additional drawings during the Contract.

The following drawings are applicable to the contract and are issued with this tender document and will form part of the Contract Documents as Volume 3.

Drawing number	**Drawing title**
STANDARD DETAILS (WESTERN CAPE GOVERNMENT)	
WCS-23-3-C3	WCG: TYPICAL GRID INLET IN CONCRETE SIDE DRAIN
WCS-23-3-C6	WCG: GRID DETAIL TYPE 1
WCS-23-3-C7	WCG GRID DETAIL TYPE 2
STANDARD DETAILS – STELLENBOSCH MUNICIPALITY	
SSW18	SUB SURFACE DRAIN: TYPE 1 (STONE)
SSW19	MANHOLE FOR SUB SURFACE DRAIN
SSW20	RODDING EYE FOR SUBSOIL DRAINS
SW1	VALVE CHAMBER
SW2	FIRE HYDRANT CHAMBER
SW5	THRUST BLOCK FOR 90° BENDS
SW6	THRUST BLOCK FOR TEES
SW7	THRUST BLOCK FOR 45° BENDS
SW8	THRUST BLOCK FOR END CAPS, 11.25° AND 22.5° BENDS
SW14	LOCKING BAR DETAIL
SR2	TYPICAL STOP CONTROLLED INTERSECTION

STELLENBOSCH
STELLENBOSCH • PNIEL • FRANSCHHOEK
MUNISIPALITEIT • UMASIPALA • MUNICIPALITY

The following drawings are applicable to the contract and are issued with this tender document and will form part of the Contract Documents as Volume 4.

34092.00-101-01 Rev T0	GENERAL SERVICES LAYOUT
34092.00-101-02 Rev T0	LANDSCAPING AND TREE REMOVAL LAYOUT
34092.00-104-01 Rev T0	STANDARD DETAILS
34092.00-110-01-Rev T0	GEOMETRIC LAYOUTS
34092.00-110-02-Rev T1	ROAD INTERSECTION LAYOUT – PHASE 1
34092.00-111-01 Rev T1	ALEXANDER STREET INBOUND & OUTBOUND LANE LONG SECTIONS - PHASE 1
34092.00-111-03 Rev T1	STRAND RD & ADAM TAS TURNING LANE LONG SECTIONS - PHASE 1
34092.00-112-01-Rev T1	ROAD CROSS SECTIONS LAYOUT (SHEET 1 OF 2) - PHASE 1
34092.00-112-02 Rev T1	ROAD CROSS SECTIONS LAYOUT (SHEET 2 OF 2) - PHASE 1
34092.00-114-01 Rev T1	ROAD MARKING AND SIGNAGE LAYOUT - PHASE 1
34092.00-114-03 Rev T0	ROAD SIGN BOARD SCHEDULE LAYOUT SHEET 1 - PHASE 1
34092.00-114-04 Rev T0	ROAD SIGN BOARD SCHEDULE LAYOUT SHEET 2 - PHASE 1
34092.00-114-05 Rev T0	ROAD SIGN BOARD SCHEDULE LAYOUT SHEET 3 - PHASE 1
34092.00-115-01 Rev T1	ADAM TAS SETTING-OUT POINTS (SHEET 1 OF 3)
34092.00-115-02 Rev T1	ADAM TAS SETTING-OUT POINTS (SHEET 2OF 3)
34092.00-115-03 Rev T1	ADAM TAS SETTING-OUT POINTS (SHEET 3 OF 3)
34092.00-117-01 Rev T1	SIGNALIZATION LAYOUT PHASE 1
34092.00-117-02 Rev T1	DIMENSIONED INTERSECTION LAYOUT - PHASE 1
34092.00-119-01 Rev T1	TRAFFIC ACCOMMODATION LAYOUT PHASE 1 OVERVIEW
34092.00-119-02 Rev T1	TRAFFIC ACCOMMODATION LAYOUT PHASE 2 OVERVIEW
34092.00-119-03 Rev T1	TRAFFIC ACCOMMODATION FOR CONSTRUCTION OF PHASE 1
34092.00-120-01 Rev T0	STANDARD DETAILS STORMWATER LAYOUT – PHASE 1
34092.00-121-01 Rev T0	STANDARD DETAILS STORMWATER LAYOUT
34092.00-121-02 Rev T0	STANDARD DETAILS STORMWATER LAYOUT
34092.00-123-01 Rev T1	SPECIFIC STORMWATER STRUCTURES
34092.00-123-02 Rev T0	STANDARD DETAILS GENERAL ITEMS RET WALL
34092.00-130-01 Rev T0	FOUL SEWER LAYOUT

34092.00-140-01 Rev T0	WATER LAYOUT
34092.00-143-01 Rev T0	STANDARD DETAILS WATER
34092.00-143-02 Rev T0	STANDARD DETAILS WATER
34092.00-170-01 Rev T0	EARTHWORKS LAYOUT & SECTIONS
34092.00-180-01 Rev T0	FENCING LAYOUT
34092.00-190-01 Rev T0	COMMUNICATION AND ELECTRICAL DUCTS LAYOUT
34092.00-190-02 Rev T0	ELECTRICAL HV & MV CABLE RELOCATION LAYOUT
34092.00-200-01 Rev T0	GENERAL NOTES
34092.00-201-01 Rev T0	SITE LAYOUT
34092.00-201-02 Rev T0	SUB-STATION LAYOUT, SECTIONS AND DETAILS
34092.00-201-03 Rev T0	COVER SLABS AT CABLE JOINTS
34092.00-301-01 Rev T0	STREET LIGHTING DETAIL DRAWINGS
34092.00-312-01 Rev T0	STREET LIGHTING SINGLE LINE DIAGRAM
34092.00-312-02 Rev T0	SUBSTATION SINGLE LINE DIAGRAM - LV
34092.00-421-01 Rev T1	MV SWITCHGEAR LINE DIAGRAM
34092.00-431-01 Rev T0	STREET LIGHTING LAYOUT SHEET
34092-02-200-01 Rev T1	SWITCHING & SUBSTATION BUILDING – ALEXANDER STREET

STELLENBOSCH
STELLENBOSCH • PNIEL • FRANSCHHOEK
MUNISIPALITEIT • UMASIPALA • MUNICIPALITY

C3.3 Procurement

CONTENTS

3.3.1 PREFERENTIAL PROCUREMENT
3.3.2 SUB-CONTRACTING PROCEDURES

3.3.1. PREFERENTIAL PROCUREMENT

The Works shall be executed in accordance with the conditions associated with the granting of preferences detailed in the **Preference Schedule** where preferences are granted in respect of B-BBEE contribution.

Financial penalties, as described in the **Preference Schedule**, shall be applied in the event that the Contractor is found to have breached and of the conditions contained in the **Preference Schedule** (unless proven to be beyond the control of the Contractor).

Notwithstanding the application of penalties, the Contractor's attention is drawn to other sanctions that may be applied by the Employer (listed in the **Preference Schedule**) with due consideration to the circumstances.

3.3.2. SUB-CONTRACTING PROCEDURES

3.3.2.1 Monitoring the use of sub-contractors

Notwithstanding the restriction on sub-contracting as described on the **Preference Schedule**, it is recognised that sub-contracting is an integral part of construction, which the conditions of contract make provision for.

In order, however, to comply with the requirements of the **Preference Schedule**, the Contractor shall submit to the Employer's Agent, on a monthly basis, a **B-BBEE Sub-contract Expenditure Report**. The format of this report is provided in Annex 2 attached.

The Contractor shall submit to the Employer's Agent documentary evidence in accordance with the applicable codes of good practise, , of the B-BBEE status level of every sub-contractor employed by the Contractor. Until such time as documentary evidence as described above has been submitted to the Employer's Agent, a sub-contractor shall be deemed to be a non-compliant contributor.

The Contractor shall furthermore, on the written request of the Employer's Agent, provide documentary evidence showing the value of work sub-contracted to any or all of the sub-contractors employed by the Contractor.

3.3.2.2 Procedure for the selection of sub-contractors/suppliers

Where monetary allowances for provisional sums or prime costs items have been provided in the Bills of Quantities, and where the work or items to which the allowances relate are to be executed/supplied by sub-contractors/suppliers, then the following selection process shall be followed in respect of the required sub-contractors/suppliers:

Where the monetary allowance is less than or equal to R200 000, the Contractor shall invite three quotations from suitably qualified sub-contractors/suppliers for the required work or items. The selection of the three sub-contractors/suppliers shall be in consultation with, and to the approval of the Employer's Agent. The evaluation of the quotations received must include a preference points system as described in C.3.11 of the Tender Data.

Where the monetary allowance is in excess of R200 000, an open competitive tender process shall be followed in respect of the selection of a sub-contractor/supplier for the required work or items. In such circumstances, tender documentation will be prepared by the Employer's Agent in consultation with and

to the approval of the Contractor, invitations to tender will be advertised in the media by the Employer's Agent on behalf of the Contractor, and a sub-contractor/supplier will be selected from the responses received, by the Contractor and Employer's Agent in consultation. The evaluation of the offers received must include a preference points system as described in C.3.11 of the Tender Data. The Contractor must satisfy itself that the selected sub-contractor/supplier can meet the requirements of the sub-contract /supply agreement and may, on reasonable grounds, elect not to employ a particular sub-contractor/supplier.

In both instances above (less than or equal to R200 000 or in excess of R200 000), the contractual relationship between the Contractor and sub-contractor/supplier shall be as described in the conditions of contract.

C3.4 Construction

CONTENTS

3.4.1 APPLICABLE STANDARDISED SPECIFICATIONS
3.4.2 PARTICULAR /PROJECT SPECIFIC SPECIFICATIONS
3.4.3 PARTICULAR SPECIFICATIONS (Continued
3.4.4 WAYLEAVES, PERMISSIONS AND PERMITS
3.4.5 LOCAL PRODUCTION AND CONTENT
3.4.6 EMPLOYMENT OF SECURITY PERSONNEL
3.4.7 UNIVERSAL ACCESS
3.4.8 UNBUNDLING OF MUNICIPAL INFRASTRUCTURE ASSETS

3.4.1. APPLICABLE STANDARDISED SPECIFICATIONS

The standard specifications on which this contract is based are the **South African National of Standard Standardised for Civil Engineering Construction SANS 1200.**

Although not bound in nor issued with this Document, the following Sections of the Standardized Specifications of SANS 1200 shall form part of this Contract.

SANS1200 A	- 1986	:	GENERAL
SANS1200 AB	- 1986	:	ENGINEERS OFFICE
SANS1200 AH	- 1986	:	GENERAL STRUCTURAL
SANS1200 C	- 1980	:	SITE CLEARANCE
SANS1200 D	- 1988	:	EARTHWORKS
SANS1200 DB	- 1989	:	EARTHWORKS (PIPE TRENCHES)
SANS1200 DM	- 1981	:	EARTHWORKS (ROADS, SUBGRADE)
SANS1200 G	- 1982	:	CONCRETE (STRUCTURAL)
SANS1200 GA	- 1982	:	CONCRETE (SMALL WORKS)
SANS1200 GE	- 1984	:	PRECAST CONCRETE (STRUCTURAL)
SANS1200 H	- 1990	:	STRUCTURAL STEELWORK
SANS1200 L	- 1983	:	MEDIUM PRESSURE PIPELINES
SANS1200 LB	- 1983	:	BEDDING (PIPE)
SANS1200 LE	- 1982	:	STORMWATER DRAINAGE
SANS1200 LF	- 1983	:	ERF CONNECTIONS (WATER)
SANS1200 M	- 1990	:	ROADS (GENERAL)
SANS1200 ME	- 1981	:	SUBBASE
SANS1200 MF	- 1981	:	BASE

SANS1200 MJ	- 1984	:	SEGMENTED PAVING
SANS1200 MH	- 1996	:	ASHALT BASE AND SURFACING
SANS1200 MK	- 1983	:	KERBING AND CHANNELLING
SANS1200 MM	- 1984	:	ANCILLARY ROADWORKS
SANS 0400	- 1990	:	GENERAL BUILDING REGULATIONS

The following standardized Construction and management requirements for works contracts will also form part of this contract:

SANS 1921-1:2004	Part 1: General engineering and construction works
SANS 1921-2:2004	Part 2: Accommodation of traffic on public roads occupied bY the contractor
SANS 1921-3:2004	Part 3: Structural Steelwork
SANS 1921-4:2004	Part 4:Third-Party management support in works contracts
SANS 1921-5:2004	Part 5: Earthwork activities which are to be performed by hand
SANS 1921-6:2004	Part 6: HIV/AIDS awareness
SANS 10409: 2005:	Design, Selection and Installation of Geomembranes
SANS 1526: 2003:	Thermoplastics sheeting for use a Geomembrane
SANS 10400: 2011:	South African National Building Regulations (NBR)

STELLENBOSCH
STELLENBOSCH • PNIEL • FRANSCHHOEK
MUNISIPALITEIT • UMASIPALA • MUNICIPALITY

3.4.2 PARTICULAR / PROJECT SPECIFIC SPECIFICATIONS

VARIATION AND ADDITIONAL CLAUSES TO THE STANDARD SPECIFICATION LISTED IN THE LIST OF SPECIFICATIONS

The following Particular Specifications for work not covered in the SANS 1200 Standarized Specifications are included hereunder:

PSA	:	General
PSAB	:	Engineer's Office
PSC	:	Site Clearance
PSD	:	Earthworks
PSDB	:	Earthworks (Pipe Trenches)
PSDM	:	Earthworks (Roads, Sub-Grade)
PSG	:	Concrete (Structural)
PSL	:	Medium-Pressure Pipelines
PSLB	:	Bedding (Pipes)
PSLE	:	Stormwater Drainage
PSLF	:	Erf Connections (Water)
PSM	:	Roads (General)
PSME	:	Subbase
PSMF	:	Base
PSMH	:	Asphalt Base and Surfacing
PSMK	:	Kerbing and Channelling
PSMM	:	Ancillary Roadworks

STELLENBOSCH
STELLENBOSCH • PNIEL • FRANSCHHOEK
MUNISIPALITEIT • UMASIPALA • MUNICIPALITY

PSA **GENERAL (SANS 1200A)**

PSA5 **CONSTRUCTION**

PSA5.1 **Setting out of the Works (Sub-Clause A5.1.1)**

Please add the following:

The Contractor shall inform the Engineer of any conflict between the position of any part of the Works and an existing feature. The setting out of the Works is the Contractor's responsibility.

PSA5.2 **Survey Beacons (Sub-Clause A5.1.2)**

Please add the following:

The Contractor shall, before the work commences, search for all the beacons as indicated on the drawings or pointed out by the Project Surveyor and inform the Engineer immediately if any of the pegs/beacons are missing. It is the Contractors sole responsibility to ensure that these beacons are not covered, disturbed or damaged. All costs for the reinstatement of such beacons are to be borne by the Contractor.

PSA5.3 **Existing services (Sub-Clause A5.4)**

Please add the following:

All services shall be treated as live until proven otherwise. The Contractor shall not commence work in an area until proper arrangements have been made for supervision of the work by the relevant authority.

The Contractor shall give assistance to service authorities with the location, protection and relocation of services controlled by that authority.

PSA5.4 **Water Control (Sub-Clause A5.5)**

Please add the following:

The rates tendered and paid for excavations shall include for dewatering as may be necessary.

PSA5.5 **Accommodation of traffic (New Item)**

Please add the following:

The Contractor shall provide and maintain all temporary road signs, etc. that are necessary for the normal safe flow of traffic (vehicles and pedestrians).

PSA5.6 **As-Built Survey (New Item)**

The Contractor shall take as-built measurements of completed installations to ensure compliance to design parameters as often and accurately as required and as a minimum at the following three stages:

i) ***During Construction Phase*** – Contractor's In-house as-built survey confirming all invert levels and coordinates of installed services, during the construction phase, after the installation of individual services.

ii) ***Construction Phase*** – Contractor In-house as-built survey confirming all invert levels of installed services, before commencing with road layer works and placing of top slabs on manholes.

(Information is to be submitted to the engineer for approval as per the Waypoint check sheets in a format as required by the engineer, in an Excel spreadsheet)

iii) ***Engineer Quality Control Phase*** – Survey by an Engineer approved External Professionally Registered Surveyor of all invert levels to commence before placing of any asphalt, but after completion of base layer. Placing of Asphalt only to commence after approval of the invert levels by the engineer and permission to proceed is granted.

(It is the responsibility of the contractor to inform the engineer when the site is ready for the Quality Control survey to commence, as a minimum 25% of Base Course completed)

iv) ***Completion Phase*** - Complete As-Built survey, inclusive of Topographical survey, by the same Engineer appointed External Professionally Registered Surveyor from stage two (2), after completion of asphalt, before hand over inspection is arranged. Spots checks of invert levels surveyed during stage two (2) is also required and/or as required by the Engineer (as per Engineer's instruction).

The Contractor/Surveyor will submit to the Engineer for checking all the as-built information as soon as possible after commencement of any of the three stages above. As-built information shall be recorded and submitted in a format as specified and which is suitable to the engineer. Numbering of manholes and structures shall match that of the construction drawings.

PSA7 **TESTING**

PSA7.1 **Testing Principles (Sub-Clause A7.1)**

Please add the following:

Every completed layer or section of the Works shall be subject to check testing by the Contractor. Once the Contractor has satisfied himself with the standard of his works, the Engineer will be requested to perform acceptance testing for the particular section. When giving notice, the Contractor shall provide the Engineer with the results of his check testing indicating that the work is to specification, or advise the Engineer in writing that although no tests have been performed he is confident that the specification has been met.

Failure by the Contractor to notify the Engineer or to provide the required information or, where specified, to perform the required test, will be grounds to exempt the Employer from payment for the associated work and for all subsequent work which would be affected by the failure of the work to be tested.

The Engineer will be under no obligation to the Contractor to perform the tests. If the Engineer elects not to perform a particular test after notification by the Contractor, he will issue the Contractor with a written instruction to proceed with the relevant works without the acceptance test being performed.

Nothing contained in this clause will relieve the Contractor of his responsibilities under the specification or in any way limit the tests, which the Engineer may call for or perform in terms of the specification.

PSA7.2 **Approved Laboratories (Sub-Clause A7.2)**

Please add the following:

The Contractor may provide his own site laboratory or make use of an external laboratory for his check testing.

The Engineer may provide site staff to perform basic acceptance testing such as penetrometer tests. More sophisticated acceptance testing such as nuclear density tests, the determination of maximum dry densities and sand displacement test shall be done by a laboratory approved by the Engineer. All sophisticated acceptance testing by the Engineer shall be paid by the Contractor through the contract.

PSA7.3 **Checking of Work (Sub-Clause A7.1.1)**

Please add the following:

The Contractor must submit a Quality Control Management Plan to the Engineer for approval. The Plan must cover all procedures and measures that the Contractor will have in place to control quality of work. The scope and frequency of these checks must be in accordance with the Waypoint check sheets supplied by the Engineer in Annexure 3 of C3.6 Annexes.

PSA8 **MEASUREMENT AND PAYMENT**

PSA8.1 **Accommodation of traffic (Sub-Clause A8.8.2)**

Please replace this clause with:

No additional payment will be made for dealing with the control of traffic. Due allowance for this item is to be made under relevant items in Section A of the contract BOQ.

PSA8.2 **Dealing with existing services (Sub-Clause A8.8.4)**

Please add the following:

The following works that are executed by the Contractor on the instruction of the Engineer will be measured and paid for under "Daywork" rates.

(i) All additional work to locate and expose the existing service if the existing service is situated further than 2.0 m from the position indicated, (i.e., excluding the initial work within 2.0 m from the indicated position).

(ii) Work that is carried out by the Contractor with regard to existing services that are not indicated on the drawings and for which the Employer will carry the cost according to Sub-clause 5.4.

Other than payment of the cost of alterations to overhead services and for dealing with and protecting poles affected by the excavations, dealing with and working below overhead wires will not be measured separately for payment as the costs thereof will be held to be covered by the other scheduled items.

PSA8.3 **Dealing with stormwater (New Item)**

The cost of controlling stormwater will be held to be included for in the tendered sums for dealing with water, no separate payment will be made for this work.

PSA8.4 **Testing of Materials (New Item)**

The Engineer reserves the right to carry out any test he deems necessary using commercial laboratories to ensure compliance of the materials supplied for use in the works with the requirements of the applicable SANS 1200 specification, or to ensure that the standard of workmanship meets the requirements of the Specification.

In the event of these check tests not meeting the requirements of the Specification, the cost of such tests shall be for the Contractor's account. If the tests meet with the requirements of the Specification, the Contractor will be required to pay the account of the laboratory concerned, but such payments will be recoverable under the provisional sum allowed for in the Schedule of Quantities. The Contractor's tendered mark-up must allow for arranging the necessary testing and for payment, if applicable, through the contract.

PSA8.5 **Miscellaneous (New Item)**

An item, which, in the payment clause column of the Schedule of Quantities, refers to this clause (PSA8.5), will be measured in the unit scheduled. The sum or rate for such item shall cover the cost of all material, labour and plant to execute and complete the work as specified, described in the Schedule of Quantities or shown on the drawing(s). Any items omitted in the schedule to complete the work successfully must either be allowed for in the rate or a separate item should be entered if so required.

PSA8.6 **Health & Safety and Environmental Contracts (New Item)**

The Rate shall cover all measures and items required to comply to the relevant OHS Act and Nema Act and the relevant specification under Annexure 1: Health and Safety Specification and Annex 2: Environmental Management Plan will be paid under these items.

PSA8.7 **Quality Control Management (New Item)**

The Rate shall cover all measures and items required to comply to the quality control plan as provided by the Contractor and approved by the Engineer.

PSA8.8 **As-Built Survey (New Item)**

The Provisional Sum for the As-Built survey by an external professionally registered surveyor as per Clause PSA 5.6 iii), shall cover all costs for the client appointed surveyor to provide detailed engineering and topographic as-built information of the completed site.

The Contractor will do the obtaining of quotes from and appointment of the surveyor after consulting with the Engineer and proposal surveyors to be asked for quotation. A minimum of three (3) quotations shall be provided for evaluation and recommendation to the client. As-built information will be submitted directly to the Engineer for checking and processing.

Invoicing by the appointed surveyor will be directed to the contractor for payment, which will be recoverable through the contract under this provisional sum.

PSA8.9 **Supply and Install Manholes (New Item)**

For any manholes to be constructed for which no specification is provided, the unit of measurement shall be the number of each, in the depth increments as scheduled, fully installed in accordance with the details shown on the drawings.

The rate shall cover the cost of excavating and backfilling with approved selected material from site borrow pits, stockpile or commercial sources, compacted to 93% of MOD AASTHO density (100% for sand), supplying and installing of all material and accessories, the inlet kerbs and the channel adjacent thereto as well as for the removal and spoil of all surplus material. The rate shall also include the connection of pipes to manholes, catchpits, etc. and of building pipes into the walls of such structures, but not for the cutting of skewed ends.

STELLENBOSCH
STELLENBOSCH • PNIEL • FRANSCHHOEK
MUNISIPALITEIT • UMASIPALA • MUNICIPALITY

PSAB **ENGINEERS OFFICE (SANS 1200AB)**

PSAB3 **MATERIALS**

PSAB3.1 **Facilities for the Engineer**

a) **Name boards (Sub-Clause AB3.1)**

Replace the first sentence with the following:

The contractor shall supply and erect to the satisfaction of the Engineer, one name board as shown on the applicable standard drawing.

b) **Office building / Conference Room (Sub-Clause AB3.2)**

Replace this clause with the following:

The Contractor is to provide one temporary building container to serve as an office for the Engineers Representative and a Conference Room. The Conference Room shall have a minimum size of 4m x 6m, and over and above Sub-Clause 3.2 and be furnished with:

i) 3.5m long by 1.5m, smooth surface, table
ii) 10 strong wooden chairs
iii) 2 + 15 A power sockets
iv) Adequate lighting
v) Natural or mechanical ventilation.

The Contractor shall also provide, maintain and service one ablution room for the exclusive use of the Engineer.

PSAB4 **PLANT**

PSAB4.1 **Engineer's equipment (New Item)**

The Contractor shall provide permanently on site the following survey equipment for use by the Engineer.

a) Automatic level with tripod and staff

b) 3 No ranging rods

c) All steel and wood pegs, concrete, hammers, picks, etc. that the Engineer may require.

d) Steel tape of length 50 m.

e) Measuring wheel

f) 2 elliptical mirrors, 150mm x ϕ

g) 1 rectangular mirror, 300mm x 275mm and

h) 1 Torch with minimum 40 lumen brightness for mirror tests.

i) 1 meter long spirit level

j) 3 meter aluminium straight edge

PSB4.2 **Laboratory Equipment**

The contractor shall supply the following equipment for the full duration of the contract.

a) A troxler nuclear system, complete with all required accessories and stored in a suitable transit

case as supplied by the manufacturers. A detailed specification and calibration certificate not older than 30 days should be available for the Engineers inspection.

b) Moisture contact measuring kit.

PSAB5 **CONSTRUCTION**

PSAB5.1 **Survey Assistant (Sub-Clause AB5.5)**

Please add the following:

In terms of sub-clause 5.5, two suitable trained and experienced workmen to be used as Survey Assistants, and the assist with control testing shall be made available to the Engineer during working hours as and when required. As for as practical the same Assistant, who shall be able to speak English, shall be allocated to the Engineer for the full duration of construction.

STELLENBOSCH
STELLENBOSCH • PNIEL • FRANSCHHOEK
MUNISIPALITEIT • UMASIPALA • MUNICIPALITY

PSC **SITE CLEARANCE (SANS 1200 C)**

PSC3 **MATERIAL**

PSC3.1 **Disposal of material (Sub-Clause C3.1)**

Substitute the first sentence of C3.1 with the following:

Unsuitable Material obtained from clearing and grubbing and from the demolition of structures shall be disposed of at approved municipal dump sites.

PSC5 **CONSTRUCTION**

PSC5.1 **Areas to be Cleared and Grubbed (Sub-Clause C5.1)**

Substitute the last paragraph with the following:

The Contractor shall program his work in such a manner that re-clearing will not be necessary. The cost of re-clearing shall be borne by the Contractor. The Engineer will indicate the areas to be cleared and grubbed through a signed site instruction.

PSC5.2 **Burning of Material on site (New Item)**

Material to be burnt on instruction of the Engineer on site shall be stockpiled in heaps no less than 20 meters into the cleared area. Any controlled burn shall be performed with the local authority knowledge and approval. The contractor shall provide location and duration for approval prior any burning of material. No polymer substances shall be burned with the controlled burn.

PSC5.2.3 **Preservation of trees**

The Penalty in respect of the removal of any individual tree designated as a tree to be preserved or falling outside of the immediate works areas shall be R5000.

PSC5.3 **Original Ground Profile (New Item)**

The Contractor shall take ground levels of the works area and compare these to the Engineers drawings. Should there be any discrepancies, the Contractor shall inform the Engineer, at least 7 days prior to any work being carried out, thereof whereupon formal agreement of the ground levels will be reached by combined surveys.

Should the Contractor not inform the Engineer of any discrepancies the ground levels provided by the Engineer will be taken as accurate.

PSC8.1 **Cutting existing Asphalt Surfaces (New Item)**

The rate provided shall cover the cost of cutting any existing Asphalt surfaces as indicated on the drawings or by the Engineer and shall include the cost of all markings and setting out to ensure that all cutting is done in a neat straight line.

STELLENBOSCH
STELLENBOSCH • PNIEL • FRANSCHHOEK
MUNISIPALITEIT • UMASIPALA • MUNICIPALITY

PSDB **EARTHWORKS (PIPE TRENCHES)**

PSDB3 **MATERIALS**

PSDB3.1 Classes of Excavation (Sub-Clause DB3.1)

Please add the following headings:

PSDB3.1.1 **Method of classifying**

The Contractor may use any method he chooses to excavate any class of material but his chosen method of excavation shall not determine the classification of the excavation. The Engineer or his Representative will decide on the classification of the materials. The classification will be based on inspection of the material to be excavated.

In the application of this classification, no differentiation shall be made between "bulk" or "restricted excavations".

PSDB3.1.2 **Classes of excavation**

All material encountered in any excavations for any purpose including restricted excavation will be classified as follows:

a) **Hard rock excavation**

Hard rock excavation shall be excavation in material (including boulders exceeding 0.15 cubic meters in individual volume) that cannot be efficiently removed without blasting or without wedging and splitting or be in material, which cannot be excavated by a loader/backhoe or by a 20 ton excavator or smaller.

b) **Calcrete and Intermediate excavation**

Calcrete and intermediate excavation shall be excavation in material that cannot be excavated by a loader/backhoe or by a scraper without prior ripping and has a high content of $CaCo_3$, but not classified as hard rock. This material shall include hardpan calcrete and bouldary calcrete including all boulders irrespective of the size.

c) **Soft excavation**
Soft excavation shall be all material not falling into the category of hard rock or calcrete excavation.

PSDB5 **CONSTRUCTION**

PSDB5.1 **Safeguarding of Excavations (Sub-Clause 5.1.1.2)**

Any cost which the contractor may undergo in ensuring the safety of excavations and any backfilling and additional excavation he may have to undertake due to unstable sides of such excavations and trends, shall be held to his account and the various rates for excavation and trending included in the schedule of quantities shall include full compensation therefore.

PSDB5.2 **Stormwater, Seepage and Dewatering of Excavations (Sub-Clause DB5.1.2)**

Please add the following:

In addition to the Contractor's responsibilities for dealing with water, which are deemed to be included in the rates tendered for the relevant payment items, the Engineer may order the Contractor to place a crushed stone-bedding layer (minimum thickness 150mm) on the trench bottom.

Should the trench bottom conditions remain unstable due to the nature of the soil and the degree of saturation, the Engineer may order the Contractor to install a Grade 3 filter fabric of minimum mass 150g/m² (geotextile as defined by the Provincial Administration: Western Cape, Roads Branch Specifications VOLUME 4) on the trench bottom prior to the provision of the stone layer. After

placing the stone bedding, the filter fabric shall be folded over the stone with a minimum overlap of 300mm to form an enclosed drain. The specified bedding material shall then be used to bed the pipe.

The Contractor shall only provide and lay the stone bedding layer and filter fabric after receipt of the written order to do so from the Engineer.

PSDB5.3 **Minimum Base widths specified (Sub-Clause DB5.2)**

Please add the following:

The minimum base width for subsurface drains and water erf connections shall be 300 mm.

PSDB5.4 **Trench bottom (Sub-clause DB5.5)**

Please add the following:

After excavation and before placing the bedding material, the in-situ material in the trench bottom shall be compacted to 90% of MAMDD, to a depth of 100mm. If this density cannot be achieved, in the opinion of the Engineer, the trench shall be excavated to a greater depth as approved by the Engineer, and then backfilled with approved materials, which shall be compacted to 90% of MAMDD.

PSDB5.5 **Areas subject to traffic loads (Sub-clauses DB3.5(b) and DB5.7.2)**

All trenches within the road reserves will be considered to be subject to traffic loads and the backfill material and compaction in these trenches shall comply with the requirements of Sub-clauses DB3.5 (b) and DB5.7.2.

PSDB5.6 **Disposal of Material (Sub-Clause DB5.6.3)**

Substitute with the following:

Excavation material from the trench, which is unsuitable or has become surplus because of bulking, displacement by the pipe and importation, shall be disposed of within free-haul distance, unless otherwise instructed by the Engineer. The material shall be neatly spread and levelled so as not to interfere with future walks nor to disrupt the natural overload flow of stormwater run-off, as instructed by engineers.

PSDB5.7 **Road Traffic Control (Sub-Clause DB5.1.3)**

Please add the following:

a) Sufficient road signs must be erected in such a way the motorists will be warned in time of works, e.g. at the closing of a street sufficient signs to direct traffic must be erected at the preceding intersection.

b) Bypasses and/or road signs shall be provided and/or erected at all locations where the free flow of traffic is obstructed and shall be approved by the Engineer before the commencement of construction. Where main roads are crossed, detours and temporary traffic signs must be provided as shown on the attached drawings.

c) Where a trench crosses a street or any place where a trench crosses the direction of traffic flow, drums must be placed in the street and not just along the sides of the street with danger tape in between.

d) Danger tape must be put up between drums and tied around the drums.

e) Drums must be filled with stones. The spacing of drums must be in such a way (maximum 5m) that they are visible from all directions.

f) Sufficient safety measures must be utilized for pedestrians.

PSDB5.8 **Shoring of Pipe Trenches (New Item)**

The Contractor shall assume full responsibility for the safety of excavations, and shall carry out all measures necessary to make the work secure, by timbering and strutting or sheet piling the excavated face or by side sloping where it is not required to act as a mould to concrete work. All timbering and strutting must be of sufficient strength and be capable of being removed readily as the work proceeds.
All timbering and strutting or sheet piling shall be subject to the Engineer's approval but such approval shall not relieve the Contractor of any responsibility with regard to the safety or suitability of the timbering/sheet piling used.

The Contractor shall further take all precautions to safeguard existing services and structures near or next to excavations carried out by him and shall provide and erect any shoring or underpinning that may be necessary.

All claims for compensation for damage or injury caused or aggregated by the Contractor not taking all precautions to safeguard persons or property shall be met entirely by the Contractor.

PSDB5.9 **Original ground profile (New Item)**

The Contractor shall take ground levels of the area and submit these for record purposes prior to any work taking place, whereupon formal agreement of the ground levels will be reached by combined surveys.

PSDB5.10 **METHODS AND PROCEDURES (NEW ITEM)**

Please add the following:

PSDB5.10.1 Conservation **of topsoil**

Removal of topsoil shall only occur in areas as approved, in writing, by the Engineer. The topsoil shall be conserved for use elsewhere.

PSDB7 **TESTING**

PSDB7.1 **Testing and compaction of backfill to trenches and reinstatement of surfaces (Sub-Clause 7.1)**

The Contractor shall carry out density tests as specified in TMH1, in the positions indicated by the Engineer, to determine the compaction of the backfill material in the trenches and the material used for reinstating the road construction layers. No single test result, which is below the specified density, will be accepted.

In the case of trenches in areas subject to traffic loads, the Contractor shall, notwithstanding the terms of second sentence of Sub clause 7.1, bear the cost of all density tests carried out.

PSDB7.2 **AREAS SUBJECTED TO TRAFFIC LOADS (Clause 5.7.2)**

The requirements of Clause 5.7.2 shall only apply to pipes and sleeves crossing streets or paved areas and pipes running parallel to the road within the road reserve and within 1.5m of the nearest road edge or kerb face.

The measurement and payment will apply to the full trench width and applicable length for full road width plus 1.5m on either side.

Compaction of other pipe trenches running parallel to the roadway shall be considered areas subject to traffic loads only where instructed by the Engineer in writing.

The volume will be computed from the minimum base width determined in accordance with Sub-Clause 5.2 and the depth from the top of the back fill to the top of the bedding as specified in Sub-Clause 8.3.3.1.

PSDB7.2 **REINSTATEMENT OF EXISTING BITUMEN SURFACED ROADS (Clause 3.6 and 5.9.4)**

Pipe trenches through the existing surfaced roads shall be reinstated with a 150mm upper selected subgrade layer compacted to 93 % MOD AASHTO density, followed by a 150mm subbase layer (G5) compacted to 95 % MOD AASHTO density and a 150mm graded crushed stone base (G2) compacted to 85% bulk relative density, unless otherwise specified by the Engineer. The road shall be provided with a minimum 40mm thick asphalt seal as per the project specification. For paved areas or stabilized subbase layers, a mix design for the stabilized layer shall be provided to the engineer for approval.

The upper selected subgrade layer shall have a CBR of at least 15, a grading modulus of at least 0,75 and a maximum PI of 12. The subbase shall conform to SABS 1200 ME and the base to SABS 1200 MF.

PSDB8 **MEASUREMENT AND PAYMENT**

PSDB8.1 **Excavation (Sub Clause DB8.3.2)**

The rates for excavation shall include the cost of battering of deep excavations to comply with the latest OSH Act.
The rates for excavation of trenches shall also cover all costs of density testing to be borne by the Contractor as specified in PSDB7.1 and the provision of suitable backfill material from other excavations where required.

a) ..... Excavate in all materials for trenches, backfill, compact and dispose of surplus material ..... Unit: m

Add the following to D8.3.2 (a):

The depth of the excavation in street reserves shall be measured from the final finished level. In cases where services lie parallel to steep slopes, the depth of the excavation will be measured along the centre of the trench (on the route of the service).

The rate for excavation for subsurface drains shall cover the cost of excavation and spoil of surplus material within 1.0km.

The rate shall also provide for the fact that the excavation width in sand will be wider than normal and that fast excavation and backfill will reduce ground water seepage.

c) Excavate and dispose of unsuitable material from trench bottom..... Unit: m³

Please add the following:

Disposal will be within free- haul distance unless otherwise indicated by the Engineer and allowed for in the contract.

PSDB8.2 **Excavation Ancillaries (Sub-Clause DB8.3.3)**

PSDB8.2.1 **Compaction in Road Reserves, Parking Areas and Walkways ..... Unit: m³**

Add the following to DB8.3.3.3:

This item is only applicable to the backfill above the bedding and blanket.

PSDB8.3 **Existing Services that Intersect or Adjoin a Pipe Trench (Sub-Clause DB8.3.5)**

a) Services that intersect a trench ..... Unit: No

Add the following to DB 8.3.5 (a):

Existing services with a depth of cover exceeding 300mm, measured from the bottom of excavation to the top of the existing service shall not be measured and paid for. There will be distinguished between existing trunk services and existing erf connection.

The rate shall allow for the following costs:

i) Sufficient photos have to be taken of existing services and handed over to the Engineer before they are being crossed, if there is a possibility of a difference in opinion over the condition of those services, especially on private property.

ii) If such a service is damaged, it has to be repaired to its original condition or if possible, to a standard agreed to in writing with the relevant owner. This agreement has to be approved by the Engineer.

iii) If such a service is removed, it has to be replaced as per original.

b) Services that adjoin a trench ..... Unit: No or m

Add the following to DB8.3.5 (b):

The unit "number" will only be used for services such as poles and trees.

No payment will be made for overhead services that do not rest directly on the ground except where allowance is made for this in the schedule of quantities. Existing services that rest directly on the ground e.g. poles, trees, walls and structures are handled in the same way as underground services, but the axis of the service will be determined as follows:

The vertical axis is defined as the nearest side or corner of the existing structure to the excavation, measured at the point where the structure and natural ground level intersect.

The horizontal axis will be the point where the structure and the natural ground level intersects. In this instance, where the excavation falls above the 45º but within 1,0meter horizontally from the structure, the service will also be measured as adjoining.

If the structure, according to the above-mentioned, does not qualify as an adjoining service but the foundation of the structure is such that if a 45º line drawn from the nearest bottom corner thereof cuts through the excavation, the structure will be measured as ad adjoining service **if approved by the Engineer**. There will be distinguished between existing trunk services and existing erf connections.

PSDB8.4 **Existing Services (Sub-Clause DB8.3.5)**

Please add the following:

a) Excavate by hand in soft material to expose existing services ..... Unit: m³ or day work

Measurement will be done in actual volumes excavated necessary to expose the services as required in terms of scope of works.

PSDB8.5 **Extra over Item for imported material..... Unit: m³ (New Item)**

The quantity will be calculated according to the actual volume of material placed in the final position according to the specified dimensions.

The rate is an "extra-over" item DB8.3.6.1 and include all costs of supplying and placing of imported material in the final position with material from commercial sources.

PSDB 8.6 **Disposal of Surplus or Unsuitable materials from trench excavations to an approved spoil site identified by the contractor, including haulage.**

The rate shall apply to all material from trench excavations that is classified as unsuitable by the Engineer and has to be spoiled off site. Volumes will be calculated in terms of item DB 8.2.3 and figure DB-4.

Additional volumes over and above that of DB 8.2.3 and figure DB-4 will only be certified for the disposal of material that was excavated, on direct written order from the engineer, to create sloped trench sides for a safe working environment in accordance with what is required in terms of the applicable OH&S act as agreed with the Engineer.

An average angle of repose for clay of 63° (approximately 1:2) will be used for volume calculations in the above case, unless otherwise agreed with the contractor. The sides will be deemed vertical in all cases for the height of the bedding and blanket cradle. Certified volumes for trenches falling within the roadway will exclude box cut volumes regardless of the chosen sequence of work.

PSDM **EARTHWORKS (Roads, Sub-grade) (SANS 1200DM)**

PSDM5 **CONSTRUCTION**

PSDM5.1 **Treatment of road-bed (Sub-Clause 5.2.3.3)**

If the required density cannot be readily achieved, the Engineer may order imported selected sub-grade quality material to be mixed with the scarified material before re-compacting.

PSDM5.2 **Original Ground Profile (New Item)**

The Contractor shall take ground levels of the works area and compare these to the Engineers drawings. Should there be any discrepancies, the Contractor shall inform the Engineer, at least 7 days prior to any work being carried out, thereof whereupon formal agreement of the ground levels will be reached by combined surveys.

Should the Contractor not inform the Engineer of any discrepancies the ground levels provided by the Engineer will be taken as accurate.

PSDM7 **TESTING**

PSDM7.1 **Routine inspection and testing (Sub-Clause DM7.3)**

Notwithstanding Sub-clause 7.3.2 and Table 2, no single test result shall be below the specified density.

PSDM8 **MEASUREMENT AND PAYMENT**

PSDM8.1 **Scheduled Items (Sub-Clause DM8.3)**

Please add the following:

PSDM8.1.1 **Trial Holes ..... Unit: No**

The unit of measurement is the number of trial holes made at position indicated by the Engineer.

The rate shall cover the cost of excavating to a depth of 1m, as well as for backfilling with the excavated material, compacted to 93% of MOD AASTHO density (100% for sand). The rate shall also include the survey and booking to determine the position of existing services.

PSDM8.1.2 **Removal of Unsuitable Material ..... Unit: m³**

The volume for payment is the volume of unsuitable material, removed on written instruction of the Engineer in accordance with clause DM5.2.3.2 below the level of the initial road-bed.

The rate is extra-over item PSDM 8.3.7 and covers all additional costs in respect of the backfilling thereof. Payment for backfilling shall be made either under PSDM 8.3.4 or PSDM 8.3.5, whichever may be applicable.

Payment shall differentiate between the areas of the unsuitable material, as measured on the initial road-bed, in increments as scheduled.

PSDM8.2 **Straw Stabilisation (New Item)**

The rate shall include the supply, placing, spreading and harrowing in the straw and for all transport, plant, materials, labour and incidentals necessary to complete the work as specified.

Straw stabilization of portions of the site, if the engineer requires and gives clear instruction to proceed, shall be done in accordance with good practice methods as proposed by a competent sub-

contractor supplier. The Engineer will require a method statement for approval before commencement of works. As a minimum, straw shall be rotovated in rows, which are perpendicular to the prevalent wind direction.

PSDM8.3 **Shaping in Erven ..... Unit: m³ or day work (New Item)**

The rate shall cover the cost of the finishing off of erven after mass earthworks have been completed and includes all labour and plant necessary to shape the surface to the erf boundary in order to obtain a uniform surface that can drain to the streets as directed by the Engineer.

PSDM8.4 **Overhaul (sub-Clause DM8.3.12)**

Please add the following:

The Rate shall be on extra over rate to items 8.3.2, 8.3.4 and 8.3.5.

PSDM8.5 **Temporary Stockpiling (sub-Clause DM8.3.11)**

Please add the following:

Temporary Stockpiling only to be done upon written instruction by Engineer.

STELLENBOSCH
STELLENBOSCH • PNIEL • FRANSCHHOEK
MUNISIPALITEIT • UMASIPALA • MUNICIPALITY

PSL **MEDIUM-PRESSURE PIPELINES** (SANS 1200L)

PSL3 **MATERIALS**

PSL3.1 **Other Types of Pipes (Sub-Clause 3.1 to 3.7)**

Please add the following:

PSL3.1.1 **uPVC Pipes**

uPVC Pipes for potable water reticulation equal and longer than 75mm ∅ shall be blue Class 12 Pipes to SANS 966 unless otherwise specified. Treated effluent lines to be Class 12 orange coloured uPVC to SANS 966 covered with approved danger tape on top of the blanket layer.

PSL3.1.2 **HDPE Pipes**

HDPE Pipes and fittings shall comply with SABS 533, using compressions type fittings. Ferrules shall for diameters smaller than 75mm ∅ not be required.

PSL3.2 **CORROSION PROTECTION (Clause 3.9)**

Protective coatings described in this sub-section shall not be measured for payment but shall be included in the rates tendered for piping, fittings, couplings and specials.

a) All cast iron valves, cast iron or steel fittings and cast iron or steel specials shall receive a two-component solvent borne epoxy pipe coating and lining such as Copon KSIR 88 from Plascon or similar approved equivalent.

   Surface preparation, application, testing and performance shall comply with the requirements of SABS 1217 type 1A, except that the minimum total dry film thickness shall be 300 micron.

   Materials shall be applied in accordance with SABS 1217 and in accordance with the manufacturer's data sheet. Attention is drawn to the need for strict observance of the manufacturer's minimum and maximum coating thickness and time interval between coats relative to ambient and steel temperatures.

   The coating shall be applied in either two or three coats with either one or two coats being applied in the workshop. After installation any scratch or chip marks shall be touched up and the whole item covered with a further coat (or two coats) of copon to give a total thickness of not less than 250 micron.

b) All bolts, nuts and washers used for flanges and couplings shall be heavy duty galvanised (clause 3.9.5 of 1200L)

c) All steel fittings and specials indicated for encasing in concrete shall be wire brushed externally and left uncoated for encasing in concrete. Lining shall be as described in (a) above.

d) Steel fittings that are partly enclosed in concrete shall be coated internally as well as the exposed external part of the fitting up to 100 mm into the concrete encasement as described in (a) above.

PSL3.3 **VALVES (Sub-Clause 3.10)**

- Scour valves and air valves shall be installed where required as per the drawings.
- Scour valves must be designed to discharge into open surface drains. Direct connections into the underground drainage system is not permitted, unless otherwise indicated.
- All valves shall be in accordance with SABS 1200 / SABS 664/1989, and be approved by the Engineer (AVK or better is deemed to satisfy).
- Valves to be of the resilient seal or wedge-gate type.
- Resilient seal valves shall be used for general applications, and wedge-gate valves shall be used for valves dividing zones, or similar key applications.
- Valves shall be clockwise opening / left hand closing.

- Direction of opening to be clearly marked on valve body or spindle cap.
- Valves shall be heavy duty: class 16.
- Valves shall have non rising spindles.
- Valves shall be fitted with cast iron tops, secured with retaining bolts
- Only valves supplied with minimum thickness of 225-micron Copon EP 2300 epoxy paint applied to all internal surfaces after it has been thoroughly cleaned by grit blastings to SA 2½ finish in compliance with the requirements of SIS 05 09 00 or valves with similar approved coatings, will be acceptable.
- Valve belltobies shall be ductile iron and painted blue after installation (orange for treated effluent).

PSL3.4 **FITTING AND SPECIALS (Sub-Clause 3.4.4)**

- All internal surfaces of CI fittings shall be thoroughly cleaned by grit blasting to a SA 2½ finish in compliance with the requirements of SIS 05 59 00 before applying Fusion bonded epoxy paint to ensure a minimum thickness of 255 micron.
- All external surfaces shall be cleaned and coated in accordance with BS 4772.
- After it has set the coating shall be such that it will not flow when heated to a temperature of 75°C.
- uPVC and mPVC fittings and specials shall be class 16, fitted with spigot and socket rubber ring joints and shall comply with the relevant requirements of SABS 966.
- Only stainless-steel bolts and nuts to be used on all underground saddles, flanges, and short collar couplings etc.
- Steel fittings and specials shall be manufactured in accordance with the requirement of BS 534 but to the dimensions shown on the detailed layouts. Steel pipe sections shall be 6mm thick grade A complying with the requirements of SABS 719.
- Cast iron fittings and specials shall be, manufactured in accordance with the requirements of 1200L, clause 3.3.
- Flexible slip-on type Viking Johnson couplings shall be complete with removable centre registers (locating lugs). The area surrounding the locating lug shall be built up to prevent damage to the female thread on the Viking Johnson coupling.

PSL3.5 **AIR VALVES**

- Air valves shall be covered with standard Ductile Iron hydrant covers conforming to SANS 1882: 2003 and shall be painted with a minimum of two coats blue oil paint, or impregnated with blue colouring during casting.
- The covers are to be secured to the frame with a galvanised chain or cable.

PSL3.6 **FIRE HYDRANTS**

- Fire hydrants shall be the Ainsworth type and shall be installed in accordance with SABS 1200, comply with the local Fire Department standard regulations, and approved by the City's Project Engineer.
- All Fire Hydrants shall be 65mm diameter (internal).
- Outlets shall be London round thread with ductile iron adaptor piece and fitted with loose cap and securing chain.
- Hydrant spindles shall be provided with cast iron caps, secured with retaining bolts. Hydrants shall be clockwise opening / left hand closing.
- Only Hydrants supplied with minimum thickness of 225 micron Copon EP 2300 epoxy paint applied to all internal surfaces after it has been thoroughly cleaned by grit blastings to SA 2½ finish in compliance with the requirements of SIS 050900 or hydrants with similar approved coatings, will be acceptable.
- Hydrant covers shall be Ductile Iron conforming to SANS 1882/ :2003 and shall be painted with a minimum of two coats yellow oil paint, or impregnated with yellow colouring during casting.
- The covers are to be secured to the frame with a galvanised chain or cable.
- Hydrants shall be supplied and installed complete with a flanged CI extension piece complete with cadmium-plated nuts and bolts to ensure depth not greater than 400mm.

PSL3.7 **PROTECTION DURING HANDLING, STORAGE, ETC.**

The Contractor shall satisfy the Engineer that the manufacturer's recommendations for good practice for transporting, handling, staking, storing and installing pipes, pipe fittings, sealing rubbers etc. are being diligently followed. The Engineer's Representative shall be given the opportunity to inspect all materials immediately prior to installation and shall have the right to reject any materials which, in his opinion, have suffered damage which may impair the long-term durability or strength of said items.

Pipes and specials shall be protected against damage during all stages of manufacture, delivery, storage and handling. The ends of all steel pipes and specials shall be protected against denting. Steel pipes shall be transported and stacked in such a manner that the pipe barrel is not deformed by more than 2% of its diameter. Dents which cause a protrusion of more than 1mm on the inside of the steel special, may result in the special being rejected.

PSL5 **CONSTRUCTION**

PSL5.1 **Depths and cover (Sub-Clause L5.1.4)**

Watermains shall be laid to minimum 1,0m cover unless otherwise indicated by the Engineer.

PSL5.2 **Location of Gate valves, Air valves and Hydrants (New Item)**

All valves to be installed opposite erf boundary pegs, and at splay corners where applicable and not within the road surface. Valve covers for general purpose valves shall be painted blue (orange for treated effluent) and shall protrude about 25mm above ground level in non-paved areas. Valve covers for zonal valves and valves which generally remain closed, shall be painted blue and shall protrude about 25mm above ground level. The position of the valve shall be marked on the kerb by cutting a slot 5mm deep into the concrete surface with an angle grinder. The slot shall be painted blue with an approved paint.

Air valves are required at all high points in the reticulation, especially in internal ring mains as indicated by the drawings.

Hydrant chambers to be constructed in accordance with Drawing W2. Hydrants shall be installed at the end of dead "runs" for charging and bleeding the lines. The position of the hydrant shall be marked on the road surface as well as on the kerb by cutting a slot 5mm deep into the concrete surface with an angle grinder. The full kerb shall be painted yellow with an approved paint.

The position of the house connection shall be marked on the kerb by cutting a 5mm deep slot with an angle grinder in to the concrete kerb face. The slot shall be painted blue.

PSL5.3 **Cutting of pipe ends (New Item)**

If it is necessary to cut pipes, the cut ends shall be turned using a field lathe. Filing of the coupling surfaces of pipes will not be permitted.

PSL5.4 **Flexible connections at structures (New Item)**

In order to avoid damage to rigid pipes entering structures or other chambers caused by differential movement, all pipes built, and cast or grouted into structures or other chambers shall be provided with flexible connections to the type details shown on Drawing LD-2 of SABS 1200 LD.

PSL5.5 **Connection on existing main (New Item)**

Where shown on the drawing or ordered, the Contractor shall cut into the existing watermain and connect in the new main.

Before commencing the excavation of pipe trenches in the vicinity of a proposed connection, the Contractor shall excavate for, expose, survey and record the position and level of the connection point on existing watermain.

The Contractor shall be responsible, through the Engineer, for liaison with the Municipality (authority

concerned) to arrange for turning off water in order to carry out the connection.

PSL7 **TESTING**

PSL7.1 **Test pressure and time of test (Sub-Clause L7.3.1)**

Add the following to L7.3.1.1.

Pipes shall not be tested against isolating valves. Special blank flanges or end caps, fully anchored, shall be provided for testing.

The maximum working pressure required to derive the test pressure field testing in terms of Sub-clause 7.3.1.2 shall be the maximum allowable working pressure applicable to the class of pipe specified.

In the case of uPVC pipes the test pressure for field testing shall be 1, 5 times the maximum allowable working pressure applicable to the class of pipe specified.

PSL8 **MEASUREMENT AND PAYMENT**

PSL8.1 **Supply, lay and bed pipes complete with couplings (Sub-clause L8.2.1)**

Please add the following:

The rates for supplying, laying and bedding pipes shall also cover the cost of cleaning the pipeline as specified in Sub-clause 5.10(a).

The rates for the supplying and laying of metal pipes shall include for the cost of corrosion protection as specified.

PSL8.2 **Extra-over Item for the Supplying, Fixing and Bedding of Valves .... Unit: No**

Add the following to L8.2.3:

Valves are measured and paid for per item, complete with the inclusion of the cutting of pipes, couplings, extra excavation and all under extra material and labour that is required, including tees, fittings, isolating valves (e.g. under air valves), complete as shown on the drawings. Flanged distances shall be included in the rate for fire hydrants.

PSL8.3 **Anchor/Thrust Blocks and Pedestals .... Unit: m³ (Sub-Clause L8.2.11)**

Please replace with:

The relevant terms of Clause 8 of SANS 1200G or SANS 1200GA, as applicable, shall apply.

Notwithstanding Sub-clause 8.2.11 anchor/thrust blocks and pedestals will be measured only by volume of concrete to the net dimensions shown on the drawings or ordered.

The rate shall cover the cost of excavation, concrete, formwork and steel reinforcement (allowing for 0,01 t of high tensile steel per cubic metre of concrete).

PSL8.4 **Flexible connections at structures (New Item)**

The rates for the various structures, manholes, etc., that are measured and paid by lump sum or by number, shall cover all the items and operations required to construct the flexible connections as shown on Drawing LD-2 of SANS 1200LD on all pipes entering or leaving that structure. Where the payment for the structure is based on itemized rates for quantities that are measured, the rate for flexible connections shall include for all the items and operations required to build the pipe into the structure flexible couplings as shown on Drawing LD-2.

PSL8.5 **Cut into and Connect to Existing Mains ... . Unit: No (New Item)**

Connections to existing pipework will be measured by number of connection points.

The rate shall cover the cost of locating, exposing and backfilling the watermain, liaising with the Municipality (authority concerned) to arrange for turning off the water, cutting into the pipe, dealing with water, cutting pipes to fit, including turning if necessary, dealing with water, and the supply and fitting of long collar repair couplings to complete the connection and, if required, the temporary sealing and anchoring of pipe ends for testing purposes and subsequent removal of seals and anchors. The specials required to make the connection will be measured separately.

PSL8.6 **Short collar repair couplings (New Item)**

Except where the rates for pipes and fittings cover the cost of couplings, short collar repair couplings will be measured by number. The rate shall cover the cost of the supply and installation of the joint including bolts, nuts and jointing material for mortar encasing as specified

PSL8.7 **Bulk Water Meter (New Item)**

The Rate will cover all necessary excavations, foundation work, brickwork, concrete work, manhole covers and backfilling as well as all specials and fittings and cutting and joining of pipes required as per drawing W4.

PSL8.8 **Protection Coatings (New Item)**

Protective coatings and linings described in this section shall not be measured for payment separately but shall be included in the rates tendered for piping, fittings and specials.

STELLENBOSCH
STELLENBOSCH • PNIEL • FRANSCHHOEK
MUNISIPALITEIT • UMASIPALA • MUNICIPALITY

PSLB **BEDDING (PIPES) (SANS LB)**

PSLB3 **MATERIALS**

PSLB3.1 **Bedding (Sub Clause LB3.3)**

Replace with the following:

The bedding to all pipes shall be as specified on Drawing LB-2 unless otherwise specified, scheduled, or ordered by the Engineer.

PSLB8 **MEASUREMENT AND PAYMENT**

PSLB8.1 **Volume of bedding material (Sub Clause LB8.1.3)**

Please add the following:

The volume of imported bedding material will be measured net, excluding the volume occupied by the pipe.

PSLB8.2 **Bedding in Waterlogged Conditions (New Item)**

The tendered rate shall cover the cost of all additional excavation and preparation of the trench bottom to accommodate the layer of stone, the removal of unsuitable material, the supply and placing of a 150mm thick layer of stone over at least the specified width, the cost of supply of the geotextile, placing and losses as a result of overlaps and over excavated trench widths and all related activities in order to produce a stable platform.

Where the use of a layer of crushed stone in the trench bottom has been authorized by the Engineer, it will be measured by volume calculated according to the length multiplied by the minimum base width and specified thickness.

PSLD **SEWERS (SANS 1200 LD)**

PSLD3 **MATERIALS (Clause 3)**

PSLD3.1 **Pipes (Sub-Clause LD3.1.5)**

Pipeline material for pipe sizes up to 250mm diameter:

- uPVC (heavy duty) class 34 solid wall complying with SABS 791.

PSLD3.2 **Manholes (Sub-Clause LD3.5)**

- Dolomite aggregate and low alkali sulphate resistant cement to SABS 471 shall be used for all concrete, mortar screeding.
- Connecting pipework shall be fitted with flexible joints.
- All manhole covers and frames to be ductile iron heavy duty with concrete infill with non-removable cover or lockable type to withstand Type 2A loading conforming to the requirements of SABS EN124 D 400.

PSLD5 **CONSTRUCTION**

PSLD5.1 **Manholes (Sub-Clause LD5.6)**

- Manholes shall generally be fibre cement and shall be installed according to the manufacturer's specifications.
- The flexible connections to the manholes shall be as shown on the typical drawing.
- Benching shall be constructed at a slope of 1 (vertical): 4 (horizontal).
- Manholes shall be provided with copolymer polypropylene step irons with a 12mm diameter high tensile steel core ("Calcamite" or equivalent) installed according to the manufacturer's specifications. Brick manholes must be plastered internally and externally.
- All manholes must be watertight and shall be tested by means of a water test.

PSLD5.2 **Connecting sewers (Sub-Clause LD5.9.1)**

Add the following:

All house connections shall be made according to the details shown on Drawing S6. The coordinate and depth of the burred end cap shall be submitted to the Engineer for approval before backfilling.

PSLD5.3 **Marker posts (Sub-clause LD5.9.2)**

Add the following:

At the time of backfilling and while the end of the service pipes to erven are still exposed the marker posts shall be installed at the end of the connection and vertically above its centreline. The posts shall protrude 0.5m above the ground level or as otherwise ordered by the Engineer.

PSLD5.4 **Drop manholes (New Item)**

Internal or External drop manholes will only be used by direct instruction of the Engineer and to the detail provided by the Engineer.

PSLD5.5 **Rodding eyes (New Item)**

Rodding eyes shall be constructed to the details shown on drawing S3 and shall be marked by a marker post. Long radius bends must be used at rodding eyes.

PSLD5.6 **Connection into existing manholes or pipelines (New Item)**
Where new sewers connect into existing manholes or pipelines the Contractor shall ascertain the exact position and existing invert level at the connection point before excavating affected pipe trenches upstream. Any discrepancy apparent in the design data shall be brought to the attention of the Engineer without delay.

Where required and after receiving the Engineer's approval of the proposed operation the Contractor shall interrupt or divert the sewage flow, excavate for and expose the existing pipe, cut into the pipe, remove the scrap material, connect the new pipework into the old and make good.

The Contractor shall deal with any sewage flow, shall cut into the existing manhole wall and benching, ensure that no rubble enters the sewer, supply and lay channels and flexible couplings (see Drawing LD-2), as required, and make good the benching and manhole wall.

PSLD5.7 **Pipe laying with high water table (New Item)**

Where a high-water table is encountered and a probability exists of water entering the trench after the pipeline has been laid, the Contractor will be permitted to bed and lay the pipes and backfill sufficiently to prevent flotation, prior to testing.

PSLD5.8 **House Connections (New Item)**

Sewer house connections shall be 110mmØ and shall be extended to 1m within the erf boundary. They shall be terminated with a rodding eye and end cap as shown on drawing S6. Where the house is constructed within 2m from the road reserve the house connection shall be extended by the building contractor so that the rodding eyes is positioned against the house wall. House connections shall be between 0,1m and 1,2m in depth.

PSLD8 **MEASUREMENT AND PAYMENT**

PSLD8.1 **Connect into existing system (Sub-Clause 8.2.11)**

Connections made into existing manholes will be measured by number.

Connections into existing pipelines will be measured by the number of connections made for different pipe sizes as scheduled.

The rate shall cover the cost of checking the position and level of the connecting points, and of all materials, plant and labour in making the connection as specified in PSLD5.6, including dealing with the sewage.

PSLD8.2. **Connection to Existing Sewers .... Unit: No**

Add the following to LD8.2.11

Separate items will be scheduled for each diameter of connecting pipe.

The tendered rate shall include full compensation for connecting the proposed pipe, any additional channelling and benching associated with the connection, cutting the pipe to suit the connection, supplying and building in the short junction pipe, extra couplings, dealing with existing flow, preventing foreign material from entering the sewer and making the connection.

The excavation for pipe lines, pipes, fittings, backfilling and manholes shall be measured separately.

Where a direct connection is made to an existing pipe, the rate covers all labour involved in opening the existing pipe, the removal of the existing end cap and disconnection at the pipe.

PSLD8.3 **New Manholes on Existing Pipes .... Unit: No (New Item)**

The tendered rate shall be all inclusive for the handling of sewage flow, all excavation and backfilling, cutting of pipe and supply and installation of the new manhole, complete as described in LD8.2.3 with finish and benching to accommodate the level difference of approximately 200mm.

PSLE **STORMWATER DRAINAGE (SANS 1200 LE)**

PSLE2 **INTERPRETATIONS**

PSLE2.1 **Definitions and abbreviations (Sub-Clause LE2.3)**

Add the following:

The terms "geofabric" and "geotextile" as used in these documents are synonymous.

PSLE3 **MATERIALS**

PSLE3.1 **Pipes (Sub-Clause LE3.1)**

Pipes for stormwater drainage shall be reinforced concrete Class 50D, 75D or 100D as specified with spigot and socket, on a Class B bedding.

Skewed ends shall be obtained from the manufacturers.

PSLE3.2 **Manholes (Sub-Clause LE3.4)**

Benching shall be constructed at a slope of 1 (vertical): 4 (horizontal). Manhole covers and frames shall be ductile iron heavy duty hinged with non-removable cover to withstand Type 2A. Manholes shall be provided with copolymer polypropylene step irons with a 12mm diameter high tensile steel core ("Calcamite" or equivalent) installed according to the manufacturer's specifications.

PSLE3.3 **Grid Inlets (Sub-Clause LE3.4.3)**

Catchpits to be constructed with heavy duty hinged ductile iron grid inlets.

PSLE3.4 **Step irons (Sub-Clause LE3.4.4)**

Step irons for stormwater manholes shall comply with the requirements of Sub-clause 5.6.3 of SABS 1200LD.

PSLE3.6 **Sub Soil Drains (New Item)**

“Sausage” and fin type subsoil drains are not permitted.

Drainage medium	:	19 mm stone complying with SABS 1083
Minimum drainage pipe diameter	:	100 mm
Pipe type	:	uPVC to SABS 1601, “Corflo” or similar

PSLE5 **CONSTRUCTION**

PSLE5.1 **Painting of cast iron items (New Item)**

Sub-clause 5.6.1(e) of SANS 1200LD shall apply to all cast iron fittings in stormwater structures.

PSLE8 **MEASUREMENT AND PAYMENT**

PSLE8.1 **Extra-over items LE 8.2.1 and LE 8.2.2 for Cutting End Units for Culverts on Site ..... Unit: No**

Add the following to LE8.2.4:

Payment shall be made only for skew cuts greater than 20º at manholes, kerb inlets and inlet and outlet structures.

PSLE8.2 **Supply and Install Manholes, Catchpits and the like ..... Unit: No**

Substitute LE8.2.8 with the following:

The unit if measurement shall be the number of each, in the depth increments as scheduled, fully installed in accordance with the details shown on the drawings.

The rate shall cover the cost of excavating and backfilling with approved selected material from site borrow pits, stockpile or commercial sources, compacted to 93% of MOD AASTHO density (100% for sand), supplying and installing of all material and accessories, the inlet kerbs and the channel adjacent thereto as well as for the removal and spoil of all surplus material. The rate shall also include the connection of pipes to manholes, catchpits, etc. and of building pipes into the walls of such structures, but not for the cutting of skewed ends.

PSLE8.3 **Supply and Install Subsurface Drains According to Drawings ..... Unit: m (New Item)**

The length shall be measured on the centre line of the completed subsurface drain.

The rate shall cover the cost of supplying, transporting, off-loading and installing all materials as well as for cutting, wasting, overlapping and installing of the materials where applicable. Excavation shall be paid separately.

PSLE8.4 **Connecting Subsurface Drains to Manholes, Catchpits etc. ..... Unit: No (New Item)**

The number is the number of subsurface drains pipes built in at manholes or kern inlets.

The rate shall cover the cost all labour, plant and materials necessary to connect the subsurface drain to manholes and/or catchpits, and making the structure watertight, all as shown on the drawings.

STELLENBOSCH
STELLENBOSCH • PNIEL • FRANSCHHOEK
MUNISIPALITEIT • UMASIPALA • MUNICIPALITY

PSLF **WATER ERF CONNECTIONS (SANS 1200LF)**

PSLF3 **MATERIALS**

PSLF3.1 **Saddles (Sub-Clause 3.1.7)**

- Saddles shall be Magnum 16 bar JASWIC polypropylene units secured with stainless steel bolts and nuts.
- Ferrules and Ball cocks not required unless specified by Engineer.

PSLF3.2 **Connection Leadings (Sub-Clause 3.1)**

- Connection leadings UP TO 50MM∅ shall be HDPE and shall be as per diameter shown on the drawings.
- Connections shall be installed as indicated on drawing no. W3 as part of new developments.
- SABS approved Ball cocks, Gate valves and Ferrules will be allowed on main water pipe only where indicated by Engineer.

PSLF3.3 **Water Meters (Sub-Clause LF3.2.2)**

- The meter shall comply with the SABS Standards Specification No. 1529 – 1: 1994 and must be approved in terms of Section 18 of the Trade Metrology Act No. 77 of 1973 and Regulation 80 of Part II of the Trade Metrology Regulations.
- All meters must be tested and sealed by an authorised official in a SABS 0259 accredited laboratory, situated within the borders of South Africa.
- The meter must be a 15mm plastic bodied, semi-positive rotary piston volumetric type, accuracy performance to Class “C” Specification, (KSM-T) with the following features:
    - Meter body to be manufactured from specially blended polyacetal.
    - Meter must be approved by Trade Metrology for vertical and horizontal installation.
    - Each meter must be backed with a 3-year guarantee against faulty workmanship and/or materials. Spare parts for meter and box must be locally available for a period of at least 10 years.
    - Meter must be fitted with a pulse output facility (1 pulse/0.51).
    - Meter must be fitted with a non-return valve.
    - Meter must be fitted with a three-way brass ballcock with trickle flow facility and special dual-purpose key for lid and valve.
    - Meter must be fitted with SABS approved DZR Brass couplings, supplying 20mm female threaded.
    - Meter couplings shall be designated that they retract when loosened to allow lifting or removal of the meter without complete disassembly connection through meter box.
    - All purchased meters must have 0 readings.
    - The meter box shall be fitted with a bass plate, a plastic male thread on both ends and a hinged lid, with viewing slot and tamper-proof locking mechanism.
    - All shall be moulded from modified poly-propylene (UV stabilized) – Kent DW619 or similar approved.
    - A brass stopcock or SABS UV resistant plastic stop cock shall be installed on the property side of the water meter box, secured to the meter box with a short 15mm copper connecting pipe.
    - Unless otherwise agreed by the Cities Project Engineers, the Civils contractor shall supply all meters and meter boxes to the City for later installation by the City or building contractor.
    - Meters shall be AMR capable.

PSLF3.5 **VALVE AND METER CHAMBERS**

PSLF3.5.3 **Surface Boxes (Sub-Clause LF3.5.3)**

Add the following to Subclause LF3.5.3

Chambers shall be according to the specific drawing and all surface material to be painted blue or

orange. Meter couplings shall be designed that they retract when loosened to allow fitting/removal of the meter without disassembling connectors.

All brass fittings shall be of dezincification resistant materials.

STELLENBOSCH
STELLENBOSCH • PNIEL • FRANSCHHOEK
MUNISIPALITEIT • UMASIPALA • MUNICIPALITY

PSLF3.6 **HOUSE CONNECTIONS**

PSLF8 **MEASUREMENT AND PAYMENT**

PSLF8.1 **Saddles (Sub-Clause LF8.2.2)**

Saddles will be measured by number separately for each pipe diameter.

The tendered rate shall cover the cost of supplying and installing the saddle including drilling and tapping to suit the other fittings.

STELLENBOSCH
STELLENBOSCH • PNIEL • FRANSCHHOEK
MUNISIPALITEIT • UMASIPALA • MUNICIPALITY

PSM **ROADS (GENERAL) (SANS 1200M)**

PSM5 **CONSTRUCTION (Clause 5)**

PSM5.1 **Limits of construction (New Item)**

PSM5.1.1 **Tie-ins with existing roads (New Item)**

The surfacing shall end at the specified limit of construction as directed by the Engineer. Each of the overlying layers of the reconstruction, including the surfacing, shall project a distance of 600mm beyond the termination of the layer immediately below it. The final surface shall be such that a smooth ride is achieved across the surface joint.

PSM5.1.2 **Provision for future extension (New Item)**

Where bellmouths or connections are provided for streets to be constructed in a zone at a later stage or for future streets, each road layer of the bellmouth or road connection shall project 600mm beyond the layer, which lies immediately above it. The base and surfacing shall however end together at the end of construction. The additional excavation resulting beyond the end of construction shall be filled with shoulder material.

PSM7 **TESTING**

PSM7.1 **Process control (Sub-clause M7.2)**

Notwithstanding the requirements of the relevant specifications with respect to the frequency of tests, the frequency of tests shall not be less than the following:

(i) One indicator test per 140 m³,

(ii) One CBR test per 700 m³, and

(iii) One density test per 140 m³, but at least three density tests are to be carried out on each layer in each section of road.

PSM7.2 **Routine inspections and tests (Sub-clause M7.3.2)**

Notwithstanding the requirements for minimum densities for single tests, as set out in the standardized specifications, no single density test result shall be below the specified density.

PSM7.3 **Compaction control (Sub-clause M7.4)**

Add to Sub-clause M7.4

"Except that where a nucleonic device is used it shall have been satisfactorily calibrated against the sand replacement method for each type of material on which it is used."

PSM8 **MEASUREMENT AND PAYMENT**

PSM8.1 **Road layers at limits of construction (New Item)**

PSM8.1.1 **Tie-ins with existing road (New Item)**

The tie-ins will be measured transversely across the road by length.

The rate shall cover all costs in connection with construction of all layers of the tie-in, including excavation, forming sound joints between each layer, surfacing and finishing off.

PSM8.2 **Testing (New Item)**

The Contractor shall bear the cost of all tests carried out by the Engineer at the request of the Contractor or as specified for process control.

STELLENBOSCH
STELLENBOSCH • PNIEL • FRANSCHHOEK
MUNISIPALITEIT • UMASIPALA • MUNICIPALITY

PSME **SUBBASE (SANS 1200 ME) (SELECTED SUB-GRADE PART OF DM)**

PSME3 **Materials (Clause 3)**

PSME3.1 **Subbase Material (Sub-clause 3.2.1(d))**

Delete Sub-clause 3.2.1 and replace with the following:

The Regional Factor for this area is 0.6 and the required minimum CBR value for subbase material is thus 45%.

For calcrete material the maximum percentage passing the 2mm sieve shall not exceed 65%.

The subbase material of G5 quality (TRH 14) shall comply with the following:

(a) Maximum size of aggregate after compaction	63mm
(b) Maximum liquid limit	30
(c) Maximum plasticity index	10
(d) Maximum linear shrinkage	5%
(e) Minimum CBR at 95% MOD AASHTO density	45
(f) Maximum CBR swell at 100% MOD AASHTO density	0.5%
(g) Maximum group index	0
(h) Minimum grading modulus	1.5

PSME5 **CONSTRUCTION**

PSME5.1 **Compaction (Sub-clause 5.4.4)**

The Contractor must make allowance for the penetration of the subbase gravel material into the selected sub-grade layer.

The layer thickness specified shall be a net homogeneous layer. Only the homogeneous layer will be measured for payment purposes.

PSME7 **TESTING (Clause 7)**

PSME7.1 **Routine inspection and testing (Sub-clause 7.2.2)**

Notwithstanding Sub-clause 7.2.2 and Table 3, no single test result shall be below the specified density.

PSME8 **MEASUREMENT AND PAYMENT**

PSME8.1 **Preparation of Road-bed to a depth of 150mm as subbase compacted to 95% MOD AASTHO density (100% for sand) ..... Unit: m³**

The rate covers the cost of crust breaking up to a minimum depth of 150mm, watering, shaping, building and compaction of subbase, final scraping, compliance with tolerances and testing.

There will be distinguished between preparation of road-bed in streets, parking areas, pedestrian walkways and sidewalks

STELLENBOSCH
STELLENBOSCH • PNIEL • FRANSCHHOEK
MUNISIPALITEIT • UMASIPALA • MUNICIPALITY

PSMF **BASE (SANS 1200 MF)**

PSMF3 **MATERIALS**

PSMF3.1 **Physical and chemical properties**

Replace Sub-clause 3.3.1 (a) with the following:

All material shall pass a 53mm sieve and shall conform to the grading requirements in Table 1 column 3 of the Standard Specifications.

The base material shall be G4 quality (TRH 14) complying with the following:

(1)	Have a maximum Liquid Limit of	25
(2)	Have a maximum Linear Shrinkage of	3%
(3)	Have a maximum CBR swell at 100% of modified MOD AASHTO maximum density of	0.2%
(4)	Have a CBR at 98% MOD AASHTO density of	80
(5)	Have a max PI of	6

PSMF5 **CONSTRUCTION (Clause 5)**

PSMF5.1 **Compaction (Sub-clause 5.4.4)**

The Contractor must make allowance for the penetration of the base material into the sand selected sub-grade layer. The layer thickness specified shall be a net homogeneous layer. Only the homogeneous layer will be measured for payment purposes.

PSMF7 **TESTING (Clause 7)**

PSMF7.3 **Routine inspection and testing (Sub-clause 7.3)**

Notwithstanding Sub-clause 7.3.2 and Table 4, no single test result shall be below the specified density.

No density shall be less than the specified minimum density for the layer under consideration.

STELLENBOSCH
STELLENBOSCH • PNIEL • FRANSCHHOEK
MUNISIPALITEIT • UMASIPALA • MUNICIPALITY

PSMH **ASPHALT BASE AND SURFACING (SANS 1200 MH)**

PSMH3 **MATERIALS (Clause 3)**

Delete clause 3 and replace with the following:

PSMH3.1 **Prime**

Prime shall consist of Inverted Bitumen Emulsion – SANS 4001-BT5

Or

Prime shall consist of MC30 cut back bitumen – SANS 4001-BT2

PSMH3.2 **Bituminous Binder**

Binder for asphalt surfacing shall be of 50/70 penetration grade bitumen

PSMH3.3 **Aggregates**

The fine aggregate for the asphalt wearing course and asphalt base shall consist of crushed aggregate only. Natural sand shall not be permitted.

(1) Absorption

When tested in accordance with TMH1 methods B14 and B15, the water absorption of the coarse aggregate shall not exceed 1% by mass, and that of the fine aggregate shall not exceed 0.5% by mass, unless otherwise permitted.

When tested in accordance with TMH1 method C4 the bituminous binder absorption of the combined coarse and fine aggregate blend shall not exceed 0,5%

(2) Design requirements

The contractor shall, by conducting the necessary tests, satisfy himself that he will be able to produce a mixture meeting the design requirements specified hereinafter, using the aggregate he proposes to supply, within the grading limits specified.

STELLENBOSCH
STELLENBOSCH • PNIEL • FRANSCHHOEK
MUNISIPALITEIT • UMASIPALA • MUNICIPALITY

PSMH3.4 **Grading**

PSMH3.4.1 **Grading limits for combined aggregate and mix proportions**

	Sieve Size (mm)	CONTINUOUSLY GRADED	
		10mm RESIDENTIAL TYPE	MEDIUM (COLTO TYPE)
Percentage Passing (by mass)	14	100	100
	10	84 – 100	84 - 100
	7	67 – 88	
	5	55 -76	56 - 77
	2	35 – 52	33 - 48
	1	24 – 39	25 - 40
	0,60	18 - 32	18 - 32
	0,30	11 – 23	11 – 23
	0,15	7 – 16	7 – 16
	0,075	4 - 10	4 – 10
	NOMINAL MIX PROPORTIONS BY MASS		
Nominal Mix proportions by Mass	Aggregate	93,4%	93,5
	Binder	5.6%	5,2
	Active Filler (hydrated lime)	1,0%	1,0

PSMH3.5 **Asphalt Mix Requirements**

Property	Residential Mixes	Continuously graded surfacing mixes
Marshall Stability (kN)	8 – 18	8 – 18
Marshall Flow (mm)	2 – 6	2 – 6
Stability /Flow (kN/mm)	> 2,5	> 2,5
VMA (%)	> 15	> 15
VFB (%)	65 – 75	65 – 75
Air voids (%)	3 – 5	4 – 6
Indirect tensile strength @ 25°C (kPa)	> 800	> 1000
Dynamic Creep Modules @ 40°C (MPa)	> 15	> 20
Modified Lottmann @ 7% Voids (TSR)	> 0, 8	> 0, 8
Air permeability @ 7% voids (cm^2)	< 1 x 10 –8	< 1 x 10 –8
Binder film thickness (microns)	5,5 – 8,0	5,5 – 8,0
Filler bitumen ratio	1 – 1,5	1 – 1,5
Immersion index (%)	>75	>75
MMLS Rutting (100k repetitions, 93% Rice briquette, 50ºC, 7200rep/hr) (mm)	N/A	< 2.0

STELLENBOSCH
STELLENBOSCH • PNIEL • FRANSCHHOEK
MUNISIPALITEIT • UMASIPALA • MUNICIPALITY

Property	Residential Mixes	Continuously graded surfacing mixes
Voids in mix (300 gyrations of the Superpave Gyratory Compactor) (%)	N/A	>2,5

PSMH3.6 **Asphalt Levels and Thickness Requirements (New Item)**

40mm asphalt to be placed as the minimum premix thickness and to be placed 2-3mm proud at C1 & CK5 kerbs.

PSMH4 **PLANT AND EQUIPMENT (Clause 4)**

PSMH4.1 **General (Sub-Clause 4.1)**

Add the following:

“Plant and vehicles used at the laying site shall be free from oil, fuel and hydraulic fluid leaks. Any item of plant or vehicle showing signs of these leaks shall immediately be removed from the site.

All plant used by the Contractor for the preparation of asphalt surfacing mixtures shall be open to inspection by the Engineer at all times."

PSMH4.2 **PLANT AND EQUIPMENT: PNEUMATIC - TYPED ROLLERS (Subclause 4.4.2)**

Individual tyre pressures of pneumatic tyred rollers shall not differ by more than 35 kPa from one another.

The rollers shall be equipped with suitable devices for cleaning the wheels.

PSMH4.3 **PLANT AND EQUIPMENT: WATER SPRINKLER (Clause 4)**

The water sprinkler shall have efficient spray equipment capable of spraying a uniform film of water over the whole area to be primed.

PSMH5 **CONSTRUCTION (Clause 5)**

PSMH5.1 **GENERAL REQUIREMENTS (Sub-clause 5.1)**

PSMH5.1.1 **Preparation of Surface (Sub-clause 5.1.1)**

A prime coat shall be applied to the surface of the base at the rate of 0.8ℓ/m². Where in the opinion of the Engineer the primed surface has become contaminated or aged such that a satisfactory bond will not be achieved with the asphalt, a tack coat shall be applied. No additional payment will be made for such a tack coat.

PSMH5.1.2 **Weather limitations (Sub-clause 5.1.5)**

Add to Sub-clause 5.1.5.1 as "(d)" and 5.1.5.2 as "(c)":

"unless the moisture content of the base is less than 3% or 50% of the optimum moisture content (MOD AASHTO), whichever is the greater, as determined by the Engineer."

PSMH5.1.3 **Opening to Traffic (Subclause 5.1.10)**

The Contractor shall not allow any of his construction equipment, which is likely to cause damage, over the completed seal. The road shall not be opened to public traffic without the written consent of the Engineer.

PSMH5.2 **PRIME COAT (Subclause 5.2)**

The Contractor shall give the Engineer at least 48 hours notice of his intention to spray the prime coat. Unless otherwise agreed in advance the Contractor shall only spray when the Engineer or his Representative is present.

Brooming and cleaning of the surface of the base layer shall be carried our not longer than 24 hours before spraying.

No prime shall be applied under the following adverse conditions:

(a) When any of the conditions listed in clause 5.1.5 of SABS 1200 MG prevails.

(b) When the surface of the base layer is visibly wet, i.e. more than damp.

(c) After sundown.

(d) When the moisture content of the base layer is higher than just below optimum moisture content.

The total width of primed surface shall be as specified on the drawings and the edges of the primed surface shall be parallel to the centre line of the road.

If the prime is applied in more than one lane, allowance shall be made for overlapping of lanes by 100 mm.

The prime coat shall be allowed to penetrate and cure until traffic can pass over the surface without picking up the prime. All traffic shall be kept off the surface until this condition is obtained.

PSMH5.3 **TACK COAT (Sub-clause 5.4)**

Where ordered by the Engineer, a tack coat shall be applied at the rate of 0.25l/m² nett cold binder.

PSMH5.4 **COMPACTION (Sub-Cause 5.4)**

Replace Paragraph 2 of sub-clause 5.8 with the following:

The completed pavement shall have a density as measured on recovered cores equal to or greater than 93% of the theoretical maximum RICE density up to a maximum of 97% of the theoretical maximum RICE density, as described in SANS 3001.AS11.

PSMH6 **TOLERANCES (Clause 6)**

PSMH6.1 **Grading (Sub-clause 6.2.1)**

Delete Sub-clause 6.2.1 and replace with the following:

The grading of the aggregate blend, determined on samples taken as specified in Sub-clause 7.2, shall not deviate from the approved working mix grading by more than the applicable value outlined in table 8 below.

Table 8 – Grading Tolerance

1	2
Nominal aperture size of sieve mm	**PD of mass of aggregate passing sieve for Continuously graded surfacing** %
14mm	±5
10mm	±5
5mm	±4
2mm	±4
0.300mm	±3
0.075mm	±2

PSMH6.2 **Thickness (Sub-clause 6.3.4)**

Notwithstanding the requirement of Sub-clause 6.3.4, for asphalt layers of 30mm and less nominal thickness the actual measured thickness shall not be less than the specified thickness.

PSMH6.2 **Tolerances (Sub-clause 6.3.6)**

The degree of tolerance shall be II

PSMH7 **TESTING (Clause 7)**

PSMH7.1 **Asphalt bases and surfaces (Sub-clause 7.2.1.2.3)**

Delete Sub-clause 7.2.1.2.3 and replace with the following:

Sample for the tests as outlined in table 11 below shall be taken on site by an accredited materials laboratory approved by the engineer.

Table 11 – Frequency of construction control testing

1	2	3	
Test	**Quantity / area to which one test is applied, maximum**	**Number of tests per lot, minimum.**	**Test Method**
Aggregate Grading	50 tons	4	
Binder Content	50 tons	4	SANS 3001 – AS20
Maximum voidless density (Rice)	50 tons	4	SANS 3001 – AS11
Bulk density and void content (Marshall)	50 tons	4	SANS 3001 – AS10
Marshall stability, flow and quotient	50 tons	4	SANS 3001 – AS2
Densities	50 tons	4	

PSMH8 **MEASUREMENT AND PAYMENT (Clause 8)**

PSMH8.1.5 **Bituminous Binder Content**

Amend MH8.1.5(b)(I) as follows:

(b) Surfacing 1) Continuous graded 5.5%

Add the following to sub-paragraph (b)

(5) Sand Asphalt Surfacing: 4.5%

PSMH8.4 **Computation of Quantities (Sub-clause 8.4)**

PSMH8.4.2 **Delete the contents of Sub-clause 8.4.2 and substitute the following:**

Asphalt surfacing shall be measured by area.

PSMH8.5.9 **Construction of Trial Section ..... Unit: m²**

The tendered rates shall include full compensation for the construction of the trial section of asphalt surfacing as specified in PSMH5.11 and in accordance with relevant requirements of the specifications as well as for subsequent removal of the trail section if ordered.

PSMH8.5.10 **Extra Over Items 8.5.4 and 8.5.5 for the Provision of Bitumen complying with SABS 307 ..... Unit: ℓ**

The unit shall be the litre of bitumen used in the surfacing complying with the requirements of SABS 307. Compensation will only be paid when the local refinery, Cape Town, is unable to supply bitumen to SABS 307 and it is ordered by the Employer's Agent that bitumen be supplied from the alternative source.

The rate will be an extra over the items and must include all additional costs to supply asphalt produced with bitumen which complies to the requirements of SABS 307.

PSMK **KERBING AND CHANNELLING (SANS 1200MK)**

PSMK3 **MATERIALS**

PSMK3.1 **Bedding material (Sub-clause 3.9)**

Amend the 2nd and 3rd lines of Sub-clause 3.9 to read:

"a 1:3:4.5 concrete mix of cement, sand and 13mm aggregate."

PSMK5 **CONSTRUCTION**

PSMK5.1 **Transition kerbs**

The Contractor shall construct transition kerbs as shown on the drawings.

PSMK5.2 **Bedding material (Sub-clause 5.2)**

Precast kerbs, channels and markers shall be laid on concrete bedding material which shall be well compacted with a minimum thickness of 50mm to suit the road construction layers.

PSMK5.3 **Excavation and bedding**

Replace "90%" wherever it occurs with "93%" (100% for sand).

PSMK5.4 **Precast concrete kerbing and channelling (Sub-clause 5.2)**

Provision shall be made for expansion joints of width 10mm at intervals not exceeding 10m.

Joints shall be filled with expanded polystyrene.

Add to Sub-clause 5.2 the following:

Notwithstanding the fact that vertical curves may not have been specified where changes of grade of up to 2% occur, the kerbs and channels shall be laid to levels based on a minimum vertical curve length of 20m. The same shall not apply at intersections.

PSMK5.5 **Road Name Kerbs (New clause)**

Road name kerbs as detailed on the drawings shall be provided at the locations shown on the drawings.

The recessed letters shall be painted with an approved paint in black. The actual names and positions required shall be as directed by the Employer's Agent.

PSMK8 **MEASUREMENT AND PAYMENT**

PSMK8.1 **In-situ Castings**

In-situ castings will not be measured separately for payment.

The tendered rate for kerbing and channelling will be held to cover all costs associated with cutting of in-situ channels and transitions.

PSMK8.2 **Kerbs and channels (Sub-clause 8.2.2)**

The rates tendered for kerbs and channels shall include for all concrete bedding and backing material (See also PSMK8.1)

PSMK8.3 **Road Name Kerbs (New Clause)**

Measurement will be by the number.

The tendered rate shall cover the cost of the supply and placing of a road name kerb and for the painting thereof.

PSMK8.2.15 **Supply and Install Concrete Bollards ..... Unit: No**

The rate shall include full compensation for the excavation of a 500mm x 500mm x 400mm hole, the supply and installation of a 1000mm x 300mm dia concrete bollard (Cape Concrete or similar), the backfilling of the hole with a soilcrete mixture (5% cement), the disposal of excess material and finishing around the bollard.

PSMK8.2.16 **Supply and Install Rings for Trees .....Unit: No**

The rate shall include full compensation for the excavation, supply and installation of a 1000mm dia x 500mm concrete ring (installed 75mm above finished surface level), backfilling, repairs to layerworks and finishing around the tree ring. The ring shall have a concrete footing to prevent roots from damaging the pavement.

PSMM **ANCILLARY ROADWORKS (SANS 1200MM)**

PSMM3 **MATERIALS (Clause 3)**

PSMM3.1 **Road Signs (Sub-clause 3.2)**

PSMM3.1.1 **General (Sub-clause 3.2.1)**

Road traffic signs shall be purchased from an approved manufacturer and shall be fabricated in accordance with the S.A. Road Traffic Signs Manual and as specified below.

PSMM3.1.2 **Reflective material (Sub-clause 3.2.9)**

Add to clause 3.2.9 the following:

Non-reflective material shall conform to the respective quality requirements, apart from the reflective quality requirements, of CKS 191.

PSMM3.2 **Road Marking Materials (Clause 3.3)**

Road marking paint for Asphalt surfaces shall comply with the provisions of this clause and SANS 731.

Road marking paint for paved surfaces shall be two-component re-coatable polyurethane acrylic finish paint as recommended by supplier.

PSMM4 **SURVEY BOXES**

Brass pin and concrete setting to remain as per drawing R13. Box cover to be as per Valve box type 3B, heavy and 100mm nominal diameter opening.

PSMM5 **CONSTRUCTION (Clause 5)**

PSMM5.1 **Road Signs (Sub-clause 5.2)**

PSMM5.1.1 **Supports (Sub-clause 5.2.1.1)**

Posts shall be fabricated 75mm outside dia. 3mm steel tubing to SABS 657.

The posts shall be straight with a smooth finished surface free rust, scale, grease or foreign matter.

Posts shall be suitably drilled to permit the sign plates or frames being firmly fixed to the posts by at least two (2) M12 galvanised steel bolts, complete with fibre washers.
The open ends of all posts shall be closed either by the use of standard fittings or by welding on a mild steel plate.

After the posts have drilled, all welding completed, and all sharp edges rounded off and smoothed down they shall be zinc coated using the "hot-dip" process in accordance with SABS specifications 763 "Hot-dip (galvanised) Zinc coating".

Should any modifications be made to posts after galvanising, the posts shall be completely re-galvanised as described above.

PSMM5.1.2 **Backing plates and boards (Sub-clause 5.2.1.2)**

All Regulatory and Danger Warning sign plates and Information signs having a width of 1.5 metres or less shall be NS 4-H6 or SIC-H4 aluminium alloy plates with a thickness of not less than 2mm and shall conform to BS 1470. The plates shall be stiffened by means of aluminium reinforcement to BS 1476 He19WP, riveted to the back of the sign by means of 5mm diameter aluminium rivets spaced at 200mm or less from one another.

PSMM5.1.3 **Painting of concrete (Sub-clause 5.2.2.6)**

Add the following section to:

a) Surface Preparation

"The concrete surface shall further be roughened with sand blasting or rough steel brush"

PSMM5.1.4 **Installation of road signs (Sub-clause 5.2.4)**

Steelwork which is to be cast or grouted into concrete shall be cleaned of loose rust, scale, oil or any other material which may in the opinion of the Engineer impair the bond between the concrete and the steel.

The posts for road traffic signs shall be placed in holes of not less than nought comma nine metres (0.9m) in depth and shall be embedded in well compacted Mix 10 concrete to the full depth of the hole and a minimum of 400mm x 400mm.

The top level of concrete shall be seventy-five millimetres (75mm) below ground level. Traffic signs shall be securely and firmly fixed to the posts by means of M12 bolts.

Road traffic signs erected in place shall be true to the required dimensions, free from buckles or dents, shall be vertical in the required position and shall have a neat workmanlike appearance.

PSMM5.2 **Surface Preparation (Sub-clause 5.3.2)**

Amend the second sentence to read:

"In no case shall road markings be applied until at least 14 days after the completion of the bituminous surface

PSMM8 **MEASUREMENT AND PAYMENT (Clause 8)**

PSMM8.3.1 **Sign Faces with painted background and symbols ..... Unit: m²**

Add the following to MM8.3.1:

No additional payment shall be made for the aluminium extrusions for road signs and all relevant costs shall be deemed to be covered by the tendered rates for such road signs.

PSMM8.4 **Scheduled Items for Road Markings (Sub-clause 8.4)**

PSMM8.4.1 **Non-Reflectorized Paint Applied at a Nominal Rate of 0.42l/m² (or Proprietary Brand Road-Marking Material) (Sub-clause 8.4.1)**

PSMM8.4.2 **Setting out and Pre-marking (Sub-clause 8.4.4)**

Notwithstanding the requirements of Sub-clause 8.4.1 and 8.4.4 measurement will be by the linear metre in the case of painted lines, setting out and pre-marking, and by number in the case of special markings.

The tendered rates shall cover the cost of supplying all materials and equipment necessary and for painting, reflectorizing and protection of the road markings.

STELLENBOSCH
STELLENBOSCH • PNIEL • FRANSCHHOEK
MUNISIPALITEIT • UMASIPALA • MUNICIPALITY

SECTION C: ELECTRICAL SPECIFICATIONS

C1001 ELECTRICAL STANDARD SPECIFICATIONS

C1002 ELECTRICAL TECHNICAL SPECIFICATIONS

C1001 ELECTRICAL STANDARD SPECIFICATIONS

C1001- 1 GENERAL

In this Part, the term "Contractor" means the person, firm or company whose tender has been accepted for the work specified in the document of which it forms a part.

C1001- 2 ELECTRICAL SUPPLY AND PHASE ROTATION

The electrical power supply details relative to fault levels, voltage and phase rotation are given elsewhere in this Specification.

The phase rotation specified shall be maintained on all overhead lines, cables, transformers, and switchgear and distribution equipment. Where existing connections are to be reconnected to a new system, the phase rotation is to be checked before disconnection and the reconnection made to maintain the same phase rotation.

C1001- 3 SWITCHING OF POWER SUPPLIES

Any switching of existing power supplies shall be pre-arranged with the appropriate Authority. All possible preparation shall be made in advance, to minimize the time required for re-energizing the system. All such switching shall be carried out by the "responsible person" unless such authority is given to the Contractor by that person, in writing.

C1001- 4 EARTHING AND BONDING

C1001-4.1 SCOPE

While every effort should be made to obtain an earth resistance value of 1,0 ohm or less, the maximum values of earth electrode resistance acceptable, unless stated to the contrary elsewhere in this specification, are 10 ohm at any minisub or transformer, 15 ohms at any indoor or outdoor switchboard or HV gang links and 20 ohms at cradle earthing points, lightning arresters or other pole mounted equipment. In the case of the earthing of LV feeder and overhead line neutrals the combined resistance to earth of all systems shall not exceed 10 ohms.

Transformer neutral earthing shall comply with the sub-Clause "Transformer Earthing" below.

C1001-4.2 GENERAL EARTH SYSTEMS

Unless otherwise specified elsewhere in this Specification, the earth systems for distribution transformers, mini subs and ground or pole mounted switchgear, lightning arresters, etc. shall generally comprise two earth electrodes with 1,5m long earth spikes located 6,0m apart, linked with 70mm bare conductor. They are to be located adjacent to pole structures or ends of plinths in the case of mini subs and shall be located at least 1,0m there from.

In the case of transformer earthing, if the neutral earth system resistance is not 1,0 ohm or less, two systems as above are to be installed, one for the LV neutral and the other for the tank and associated equipment in which case they are to be kept at least 6,0m apart and at opposite sides of the transformer position.

The earth system is to be connected with 70mm² insulated earth conductor to the earth bar or transformer tank earth stud as appropriate.

Immediately after installation and before livening up the equipment the Contractor shall test the earth resistance of the earth system, using the respective earth bar or termination as the reference point. If the required value is not obtained, each earth spike, if installed in a sidewalk, shall be increased in length by driving a further length of 1,5m but where located in open ground, two additional spikes are to be installed. These latter spikes are to be perpendicular to the original two, in line with the spike at the point of connection of the insulated earth conductor and each 6,0m there from. After installing the additional spikes, the earth resistance shall again be determined. The Contractor shall submit a report in duplicate confirming the values measured, including the first set if appropriate, to the Engineer.

Where the number of spikes called for does not achieve the required values, the Engineer is to

be advised and will give further instructions for the improvement of the values obtained. Where more spikes are necessary to obtain the required value, these shall not be installed within 6,0m of any other spike.

The common leg of the secondaries of CT's, other than the secondaries of summation transformers, shall be effectively earthed to the main earth system.

C1001-4.3 OPERATOR'S PLATFORM

A 1,0m x 1,0m HDG operator's platform complying with the detail shown on the drawing annexed to this Specification is to be installed at each gang-link isolator, unless otherwise indicated in this Specification. The platform is to be erected 150mm above ground level, the legs being cast into mass concrete generally complying with the Clause "Plinths" elsewhere in this Part.

The platform is to be connected "by means of two 40mm" bare earth conductors to an earth system as described above.

A separate 50mm² bare earth conductor is to be used to bond the isolator steelwork to the platform. The steelwork ABOVE the insulated section of the operating rod is not to be bonded.

Where a steel plate in lieu of a platform is specified elsewhere in this Specification, this shall comprise a hot dip galvanised steel plate of 1,0m x 1,0m x 6,0mm steel located at the operating handle position. This plate is to be bonded to the earth system and to the isolator steelwork using two 50mm² earth conductors connected to separate points.

C1001-4.4 EARTH SPIKES

Earth spikes shall comprise 16mm sectional steel core rods with a minimum of 0,25mm pure copper coating molecularly bonded thereto, complying with SANS 1063, and of "Cadweld" or equivalent manufacture. The top of earth spikes and the interconnecting conductors are to be 1,0m below finished ground level.

Under no circumstances are earth spikes to be located closer than 1,0m to any structure or plinth nor are they to be installed in pole holes.

The connections to earth spikes shall be by means of at least two phosphor bronze mechanical clamps of an approved type for this duty, or a "Cadweld" joint. The clamps shall not be attached to the rod but must be installed so that the bolt face is in contact with the rod. Brazing will not be accepted. The connection must be wrapped with two layers of "Denzo" tape. "

A cable marker as described elsewhere in this Part shall be installed above each spike and shall be labelled "Earth Spike".

C1001-4.5 EARTH CONTINUITY CONDUCTORS

Earth conductors shall be hard drawn bare copper wire complying with SANS 182 or bi-coloured green/yellow PVC covered, the PVC being UV stabilised complying with SANS 1411 Part 2, as elsewhere specified herein. The conductor sizes shall be such that they can carry the short circuit current likely to be imposed upon them but generally shall be half the area of the phase conductors with a maximum size of 70mm² or in accordance with the appropriate Regulations, unless specific sizes are given elsewhere in this Specification. 50mm² conductors shall be 7/2, 65 HD.

Bare earth continuity conductors shall be run with all cables constituting a low voltage distribution system except in the case of township reticulation where an earth system as described in the sub-Clause "Neutral Earthing" above shall be installed at kiosks, etc.

A single conductor may be used where two or more cables run together, provided that the conductor cross-sectional area is based on the largest size cable in the run, and that branch earth wires are solidly connected to the main earth conductor using only "Cadweld" connections. Earth continuity conductors shall be connected to main earth bars.

Bare earth conductors shall not be less than 500mm below ground level. Above this level all earth conductors shall be green insulated carried in a PVC conduit sleeve except where

galvanised conduit is specified elsewhere herein.

A terminal lug shall be crimped onto the end of the main earth conductor for bolting to the main earth bar of a substation or mini-sub or other outdoor equipment. Two mechanical clamps shall be used for connection onto cradles or other equipment, as appropriate.

Earth connections shall be so made that in the event of any connections being removed the earth connection to the rest of the equipment will not be affected.

C1001-4.6 Bonding Generally

All metallic parts of the installation are to be bonded to the earth system as required by the appropriate Regulations.

All iron roofs, gutters, down pipes water and waste pipes, as well as all steel structures, are to be bonded to earth. The maximum resistance of any such point to the earthed end of the earthing lead shall not exceed 0.2 ohm.

C1001-4.7 Bonding of Equipment

Where equipment is bolted together, as in the case of an HV or LV switchgear panel, there is to be a 32mm x 4mm copper earth strap extending the whole length of the equipment. All earth bars shall be run in one continuous length as far as possible, and shall not be bent or formed in any way that requires hammering or severe distortion. Any joints shall be lapped with at least two bolts with nuts and washers of suitable size. The lapped ends shall be pre-tinned. If multiple straps are used, they shall be bolted and fixed together at not more than 75mm intervals. All connections shall be made using brass or stainless-steel bolts, nuts and washers, together with a star lock washer, on all kiosks, fused feeder panels, mini subs and outdoor equipment. Connections to indoor equipment may be made with cadmium plated steel bolts, nuts and washers, with a steel spring washer.

All steelwork on a pole is to be bonded using 25mm² solid copper conductor. This requirement applies to cross-arms, all insulator supports and any other hardware. Where equipment is also mounted on the pole, the bonded metal is to be earthed to an earth spike as elsewhere specified herein, using a 50mm² bare copper conductor.

C1001-4.8 Bonding of Steel Lighting Poles

Steel streetlight and site lighting poles shall be bonded with a continuous earth continuity conductor of half the area of the phase conductor, but a minimum size of 4mm², laid with the cables. This conductor shall be connected to the pole earth stud. At the last pole in a run the neutral conductor shall be bonded to earth.

C1001-4.9 Supplementary Requirements for Building Services

The main earth system is to comply with the Supply Authority's requirements. Earth spikes, mats and conductors shall be installed as early as possible in the building program, and the onus is on the Contractor to arrange this with the Building Contractors to avoid later disturbance of completed construction. Before proceeding, however, the attention of the Engineer is to be drawn to the exact proposals and approval obtained.

Bare earth conductors complying with the requirements of the Wiring Code shall, unless otherwise specified elsewhere in this Specification, be drawn into conduits together with the current carrying conductors, between all main, sub-main and sub-distribution boards.

Ends of earth conductors shall be terminated in lugs securely bolted to switchboard frames or trays.

Unless otherwise specified elsewhere in this Specification, bare copper earth wires complying with the Wiring Code shall be run with all socket outlet, water heater, stove and other power outlets. Bare earth wires shall also be run in all ceiling and skirting trunking to bond all light fittings, socket outlets and the trucking lengths themselves. Such conductors shall also be run in all non-metallic conduits. In aluminium trucking, the earth wire shall be insulated with green PVC.

Earth conductors run outside flexible tubing, where this has been permitted, shall be run neatly along the tubing and shall be held in place by approved cable ties. Such conductors shall not be

wound around the tubing.

C1001- 5 DISTRIBUTION KIOSKS AND FEEDER PILLARS

C1001-5.1 Construction

The enclosure shall be of the type specified elsewhere and shall be of a size suitable to accommodate all the equipment specified hereunder and elsewhere in this Specification. All kiosks used on a particular installation shall, unless otherwise specified, be of the same size. All sizes will allow for a minimum of 15% spare capacity for future extensions and upgrades.

The unit shall be well ventilated, and its construction and installation shall prevent the ingress of rain and sand and it shall be rodent proof. Should it be found over time that this requirement has not been met, the final retention monies will not be released until the remedial work has proved to be effective. Cognisance shall be taken of the site conditions and the kiosks and all equipment provided therein shall be selected to prevent deterioration under these conditions.

All units shall be provided with a robust and approved front door which shall be labelled as specified in the Clause "Labels and Notices" elsewhere herein. The door shall be provided with a restraining device of non-ferrous components to prevent whipping when opened, approved 3-point latching for larger and 2 point for 6 way and smaller units, and padlocking facilities. The external components shall be heavy duty die cast aluminium.

All hinges shall be stainless steel. All locking rods, guides, striker plates and similar accessories shall be hot dip galvanized mild steel.

C1001-5.2 Contents and Equipment

The equipment in the kiosks shall be mounted on a 9,5mm "Masonite Weatherboard" panel. This panel is to be supported on a galvanized steel frame which is to be fixed to the kiosk main frame. No equipment is to be attached to the removable kiosk enclosure.

Unless stated to the contrary elsewhere in this Specification, the panel shall have sufficient space for nine 80A SP Curve 1 (orange handle) 5kA MCB's, one maximum demand energy meter and one main circuit breaker rated at least 300A mounted in three rows of three units. The actual equipment to be provided in the kiosk is detailed elsewhere in this Specification.

Kiosks shall be pre-wired for all specified equipment whether supplied with the kiosk or not. All bare wire ends for future equipment on the front of the panel shall be heat shrink capped. Any other equipment mounted on the front of the panel shall be suitably shrouded.

Four plated HD copper bus bars minimum 25mm x 6mm mounted vertically on colour coded stand-off insulators shall be provided on the back face of the panel. They shall be provided with 12mm brass bolts, nuts and washers for the termination of the feeder cables and with 8mm brass bolts, nuts and washers for the total number of service connections for which the kiosk is designed.

The bus bars shall extend downward below the bottom insulator a sufficient distance to enable the incoming and outgoing main feeder cables to be connected vertically above one another.

Where MCB’s are required for feeder cable protection they shall comply with the Clause "LV Circuit Breakers" elsewhere in this Part.

A 2mm thick galvanized metal gland plate shall be bolted to the abovementioned frame above the root. The gland plate shall extend the full length and width of the kiosk. The section of the gland plate behind the panel shall be for the main kiosk feeder cables whilst the remaining portion of the gland plate shall be for the outgoing service cables. The gland plate shall be pre-drilled for the feeder cables specified and for the total number of service cables for which the kiosk is designed, regardless of the number utilised at this stage.

The gland plate shall be provided with two 75mm long brass or stainless-steel bolts with the stud facing upwards, one of 12mm dia. for the feeder cable earth conductors and one of 8mm dia. for the service connection earth conductors. The bolts shall be held by nuts and washers to the gland plate and each lug shall be individually bolted to the stud. The neutral bar shall be connected to the 12mm stud with 70mm² PVC insulated earth conductor.

C1001-5.3 Steel Kiosks

The enclosure shall either be constructed of 3CR12 low grade stainless steel as manufactured by Southern Cross Steel or of hot dip galvanized steel.

Unless otherwise specified, the following minimum plate thicknesses shall be used:

3CR12	-	2,0mm
HDG Steel	-	3,0mm

The actual type of steel to be used in the construction of the kiosks is detailed elsewhere in this Specification.

The manufacturer shall, upon request, provide mill certificates for the stainless steel used in the manufacture of 3CR12 kiosks. All welding of 3CR12 kiosks shall be done using MIG welding. All welded areas shall be pickled and passivized after welding. Hot dip galvanising shall be in accordance with the Clause "Hot Dip Galvanising" elsewhere in this Part.

Steel kiosks shall be provided with a 50 x 50 x 6mm hot dip galvanized channel under base for bolting down onto a concrete plinth as specified in the Clause "Plinths" elsewhere in this Part. The top of the plinth shall be located as for roots under the sub-clause "Construction" above.

Kiosks shall be painted to a colour, specified elsewhere, as follows:

3CR12 Heat fused electrostatically applied epoxy powder coating to a thickness of 70 microns.

HDG One undercoat and two coats of suitable outdoor type enamel paint applied after approved passivation and priming.

C1001-5.4 Fused Feeder Pillars

Fused feeder pillars for outdoor use shall be housed in a kiosk of similar construction to that for distribution kiosks described above. The kiosk shall be large enough to accommodate all the equipment described hereunder and shall have a min. 2,0mm thick galvanized steel gland plate running the full width of the kiosk, and a 25mm x 6,3mm HD copper earth bar.

All equipment shall be mounted on a galvanized steel frame which shall be welded to the gland plate such that the kiosk enclosure may be removed without disturbing any of the enclosed equipment. Where required for the mounting of instruments, etc., a solid pine cored blackboard, bolted to the steel frame, shall be used.

The feeder pillar shall contain the number of units called for elsewhere in this Specification. Each unit shall comprise three HRC fuse bases with insulated fuse bridges and a bare neutral link, in their formation. The units shall be of a standard factory-made type similar or equal to those produced by GEC Alsthom.

The units shall be mounted side by side and linked with 500A rated copper bus bars across each horizontal line of fuses and neutral links. A 500A rated bolted isolating link shall connect the end of each of the phase bus bars to an insulator to which the main incoming cable tails are to be connected. All connections are to be made using brass bolts, nuts and washers.

Three metering current transformers of the ratio elsewhere specified shall be provided, one on each phase tail of the incoming cable. Three maximum demand reading ammeters and a voltmeter and selector switch shall be mounted adjacent to or above the fuse units. The instruments shall be as specified elsewhere in this Part.

The fuse bases and bridges shall be suitable for HRC fuses from 30A up to 300A complying fully with SANS 173. One complete set of fuses of the sizes elsewhere specified shall be fitted and two sets of spare fuses of each size shall be provided, mounted in stainless steel clips attached to the back of the door. Fuses shall be HRC type complying fully with SANS 172. The breaking capacity shall be AC2O and the fusing factor Class Q1.

Where a fused feeder pillar is required for use inside a substation building, it shall be generally as described above, except that there shall be no enclosure and the equipment shall be mounted on a frame which shall be fixed to the floor and the wall of the substation. All live parts shall be shrouded to prevent accidental contact.

C1001- 6 LV CIRCUIT BREAKERS

C1001-6.1 General

The supply voltage, normal current, fault capacity and type, as well as any special characteristics required of circuit breakers, shall be as stated elsewhere in this Specification.

All main circuit breakers shall be equipped with adjustable instantaneous magnetic and inverse time delay thermal overload releases on each phase and shall be arranged for flush mounting. They shall be connected to the bus bars with solid copper connections of adequate section to resist short circuit stresses that may be imposed by faults up to the maximum rupturing capacity of the breaker.

Where circuit breakers are used to control supply taken directly from the Supply Authority, they shall be of a make approved by that Authority, and shall be set to trip within the specified limits laid down by that Authority.

C1001-6.2 Air Circuit Breakers

Air circuit breakers shall comply with the requirements of BS 4752. Unless elsewhere specified, air circuit breakers of 800A or larger shall be of the rack-out type. Interlocking shall ensure that racking in or out can take place only with the circuit breaker open. The connecting device between the incoming cable and the breaker and between the circuit breaker and the outgoing bars shall be fitted with shutters which are automatically closed and locked by the action of racking out.

C1001-6.3 Moulded Case Circuit Breakers

Moulded case circuit breakers shall comply with SANS 156 with time delay tripping on low overloads and high speed tripping on short circuit. Except where larger rupturing capacity MCB's are elsewhere specified, these shall be Class 5kA 240V or 415V, as applicable, and where various current and breaking capacities are required, all MCB's are to be of one size throughout the installation. All MCB's are to carry the SANS Mark to ensure that they comply with Compulsory Specification VC 8036.

The Engineer will not accept a mixture of circuit breakers from various Manufacturers to meet the various duties required.

In the case of motor control, all MCB's shall be supplied with "slow" tripping curve (Curve D or curve 1) except that those MCB's controlling motor starters located in the same control panel shall not have over current trip elements, this feature being provided by the adjacent starter overload device, magnetic high current protection only being required.

Where MCB's are required to be connected to cables larger than 70mm², the terminals shall be of the stub bus bar or rear connecting stud types. For all other cables, box type terminals shall be provided. Three phases MCB's shall be fitted with suitable phase barriers.

MCB's shall be fitted with purpose made terminal shrouds where no fascia plate is provided.

C1001- 7ELECTRICAL ENERGY METERS

Electrical energy meters shall be installed with the specified CT’s on the main incoming feeder cable feeding the distribution kiosk/switchboard. Correct programming will be done by the supplier of the electrical energy meter and the contractor will be responsible to determine from the supply authority the correct tariff characteristics for the applicable connection.

INSTRUMENTS, METERS AND PROTECTION RELAYS

C1001-7.1 General

All indicating instruments and meters shall have 5A HRC fuse protection on all voltage connections.

All meters and instruments shall have labels fitted below, stating in which circuit they are installed and the multiplying factor, where appropriate.

All instruments shall have a red line marked on the scale at the normal or maximum operating point as appropriate.

The cases of all meters shall afford complete protection from dust and damp and shall be suitable for the attachment of seals.

Selector switches shall be rated at 16A and shall be similar to Sprecher and Schuh, Telex, Krause and Naimer or equivalent. They shall be provided with an "OFF" position.

All instruments and meters shall comply with the appropriate British Standards Specification.

The Tenderer shall submit full details of the meters, instruments and control switches offered in his tender, including connection diagrams for all equipment.

Protective circuits will operate at 30V DC unless otherwise herein specified elsewhere.

C1001-7.2 Potential Indicators

Potential indicators shall comprise three neon indicating lamps each energised from a capacitor bushing connected to indicate that the incoming cable or the bus bars, as elsewhere specified, are alive.

C1001-7.3 Protection Relays

Protection relays shall be supplied in accordance with the following requirements unless otherwise detailed elsewhere in this Specification. All relays not covered herein will be specified in detail elsewhere in this specification.

Over current and earth fault relays shall be of the static type with either inverse definite minimum time characteristic adjustable from inverse to extremely inverse or definite minimum times of 2,4 or 8 seconds selectable on the relay.

Over current settings shall be adjustable from 50% to 200% in 2,5% steps and time settings from 5 to 100% of the DMT. Earth fault current settings shall be adjustable from 10% to 40%.

Generally, two over current and one earth fault relay shall be mounted in a common housing. A suitable relay would be the GEC type MCGG52. Any other relay offered must be an approved equivalent to this unit.

Sensitive earth fault relays shall be of the static type. Current settings shall be from 0,5% to 8% in 5 steps. The time delay unit shall be adjustable from 0,1 to 9,9 seconds in 0,1 steps or 10x these times, selectable on the relay. A suitable relay would be GEC type MCSU. Any other relay offered must be equivalent to this unit.

C1001-7.4 Current Transformers

Current transformers shall be epoxy-resin encapsulated. The rated burden shall be not less than 10VA, unless specified otherwise elsewhere. They shall comply with BS 3938 and shall comply with the following table.

Application	Primary Current	Class
Indication	All	5
Protection	All	3
Metering	Up to 250A	1
Metering	250 - 600A	0,5
Metering	600 - 800A	0,2
Metering	800A and above	0,1

C1001-7.5 Voltage Transformers

Voltage transformers shall comply with BS 3941 Class 0.5 accuracy, and shall be 3 phase oil filled units mounted on top of the HV switch panel, arranged for horizontal draw-out. The output shall be 50VA per phase at 110V phase to phase unless otherwise specified. Fuse protection shall be provided on both primary and secondary.

Such transformers shall not be affected by single-phasing on the HV side.

C1001-7.6 Indicating instruments

All instruments shall be square format industrial accuracy grade to BS 89 and shall be flush mounted. All main instruments shall be 96mm square, meters for individual drives or in modular panels being 72mm square.

Ammeters:

All ammeters, including whole current ammeters, shall be calibrated to 120% of the rated current. The overload capability shall be 10 x rated current for 1,0 second. Those reading in excess of 100A shall be CT operated with 5A full scale deflection.

Instantaneous reading ammeters shall be of the moving iron type, one instrument being provided, connected via a phase selector switch with "OFF" position.

Maximum demand reading ammeters shall be of the combined maximum demand and instantaneous type, one meter being supplied per phase, unless otherwise specified. They shall comprise a thermal maximum demand ammeter with drag pointer combined with a moving iron instantaneous pointer. The drag pointer reset knob shall be sealable. The bimetal system shall be ambient temperature compensated and shall have a 15-minute response.

Where dual ratio CT's are specified, ammeter scale plates are to be engraved on both sides to suit these ratios, the plate for the lower ratio being outermost.

Voltmeters:

Voltmeters shall be of the moving iron type. One instrument shall be provided in each instance connected via a selector switch to read line to line voltages and also line to neutral voltages.

Volt meters for HV use shall be suitable for operation on the 110V side of the voltage transformer, while LV volt meters shall operate off a nominal line to line voltage of 400V. The scales between 90% and 110% of nominal voltage shall be graduated in 1,25% divisions.

PF Indicators:

Power factor indicators shall be of the moving iron type suitable for use on unbalanced loads.

C1001- 8 CONTROL EQUIPMENT AND WIRING

C1001-8.1 Time Switches

All time switches shall be mounted in an accessible position for ease of adjustment, and shall be provided with re-chargeable nickel cadmium batteries to provide up to 48 hours of operation should a power failure occur.

Motor Control:

Time switches shall be fully programmable to a maximum of 168 switching points with 24 memory addresses permitting hourly, daily and weekly settings. The shortest switching interval shall be 1 minute. The units shall include a manual override facility. They shall be suitable for wall or DIN-rail mounting. Protection shall be at least to IP42 and the units shall operate satisfactorily in the temperature range - 5○C to + 55○C. A suitable time switch would be "Sauter" type Memotime Z5D 7.

General Purpose:

Time switches shall have a crystal-controlled stepping motor and be able to perform 48 operations per day with a minimum interval of 30 minutes. A manual override facility must be provided. A suitable time switch would be "Heinemann" type SAT-R.

C1001-8.2 Low Voltage Transformers

Bell and other low voltage transformers shall be of the double wound type having the secondary voltage specified and shall have an adequate capacity for the duty required but, in any case, not less than 50VA on short-time rating. The transformers shall comply with SANS 743 and shall have one end, or the centre point of the low voltage winding earthed.

C1001-8.3 Contactors

Contactors shall, unless otherwise specified, comply with BS 775 for current making and breaking Category ACI for non-inductive loads and Category AC3 for inductive loads.

C1001-8.4 Earth Leakage Protection Units

Earth leakage protection units shall be single or three phases, as indicated, with a sensitivity of 30mA, unless stated to the contrary elsewhere in this Specification or on the drawings. The unit shall actuate a shunt trip isolator or MCB as specified.

The earth leakage units shall comply with SANS 767 and shall carry the SANS Mark to ensure that they comply with Compulsory Specification VC 8035 promulgated in Government Gazette No 10987.

C1001-8.5 Pilot Lights

Pilot lights are to be cluster LED, neon, transformer or resistor reduced wattage type. Under no circumstances will 230V pilot lamps, except in the case of neon, be accepted. Care shall be taken to select pilot lights which can be easily seen when operating in normal daylight. Where pilot lights are connected to remote equipment by multi-core control cables neon lamps shall not be used because of the inductive effect of the control cores. 100% spare lamps are to be provided for all pilot lights.

Unless otherwise specified elsewhere herein, in motor control and other multiple control panels pilot lights are to be controlled by an adjustable timer to limit the duration of operation from 1 to 5 minutes. The timer is to be activated by a suitably labelled push button mounted on the face of the panel. In such cases lamp test facilities, with the test button mounted adjacent to the button described above, must be provided.

Pilot lights are to be of the colours indicated below, unless elsewhere specified.

Power on - Amber
Fault - Red
Run - Green

Pilot lights indicating "STARTER CLOSED" and "OVERLOAD TRIP" shall be fitted to all motor circuits.

C1001-8.6 Hour Meters

Hour meters shall be of the digital type reading up to 99999 hours. They shall be suitable for 230V, 50Hz. AC operation.

C1001-8.7 Duty Selector Switches

The control of all items of equipment which can act as standby to each other must include a duty selector switch to enable the lead duty to be selected as well as second and third preference, i.e. 1,2,3; 2,3,1; 3,1,2 for a three-motor system.

C1001-8.8 Hand/Off/Auto Switches

A hand/off/auto switch shall be fitted to each starter subject to automatic Control. The hand control circuit, which shall comprise stop-start push button, shall be fed from a fuse other than that for the automatic control system.

C1001-8.9 Phase Failure Relays

All phase failure relays are to provide reverse phase rotation protection. The relay is to operate a shunt trip coil in an on-load isolator to be provided to disconnect all but non-motor load feeders from the board, or in the control circuit, as indicated on the schematic diagram. The relay is to be so arranged with a timer that it will only initiate a trip upon a single-phase condition occurring and not upon restoration of power. Provision is to be made to ensure that a trip occurs irrespective of which phase is lost.

C1001-8.10 Relays

All relays and timing relays are to be of Sprecher and Schuh, Telemecanique, Klockner-moeller, or approved equivalent manufacture. Each relay is to be numbered and this number must appear on both relay and adjacent to its respective base in the case of the plug-in type. All adjustable timing relays must be labelled with their function.

C1001-8.11 Photo-electric Controls

Photo-electric switches shall be of the type comprising a photosensitive resistor, thermal actuator with an inherent operating delay to make it insensitive to short duration changes in light levels and a changeover switch mechanism, all housed within a tough, translucent, weather and ultraviolet resistant cover. The operating level shall be factory pre-set to switch on at approximately 50 lux and off at approximately 100 lux. The response time after sudden changes in light level shall be not less than 15 seconds.

Integral protection against voltage surges shall be provided.

A suitable unit would be the "National" type ZS-20AR.

C1001-8.12 Main and Control Circuits

All control equipment shall be mounted in a separate hinged panel fitted with square key latches to permit ease of access to terminals, etc., at the rear of the panel. Where bus bars are located directly behind such panels, a separate removable insulated panel shall screen them.

All wiring shall be carried out using suitably rated, colour coded insulated wire. Internal wiring to and from contactors shall be sized according to the contactor manufacture's recommendation for the duty selected.

All main terminals are to be connected in strict phase rotation. Wires shall not be joined between terminal points and no terminal shall have more than two wires connected to it unless they are lugged connections.

Spare terminals are to be provided to accommodate all spare control cable cores. All terminals shall be either bolted or screwed. All terminals for wires smaller than 16mm² shall have

pressure plates. All terminals for the connection of external control wiring shall be of the "disconnect" type.

All terminations shall be fitted with numbered ferrules, the numbers corresponding to those on the appropriate wiring diagrams to be prepared by the board manufacturer. All terminal strips are to be similarly numbered.

Generally, wiring shall be enclosed in strategically placed plastic wireways. Small numbers of wires to remote positions may be neatly strapped, using plastic buckle clips or hard plastic "loom formers". Where wiring is run to equipment mounted on hinged doors, the wiring shall be carried in a plastic "loom former" which is so installed that the wiring is not strained with the door fully open.

The colour of all panel wiring shall comply with the following: -

Colour of wire Circuit Particulars

Red, White and Blue Phase connections in current and voltage transformer circuits and in all three phase circuits.

Green/yellow bi-colour Insulated earth wires.

Black Neutral connections.

Grey Control connections.

White Connections in DC alarm circuits.

All control circuits shall have 5A HRC fuse protection.

C1001-8.13 Labelling

All control equipment both within the panel as well as all projecting items, are to be labelled in accordance with the Clause "rebels and Notices" elsewhere in this Part. Any device which can

C1001- 9 TRENCHING, EXCAVATION AND COMPACTION

C1001-9.1 General

The Contractor shall allow for all excavation and back-filling of cable trenches and holes for planting of poles unless this is stated to be done by others elsewhere in this Specification. In this case the Contractor shall provide the trenching contractor with details of his requirements in this regard prior to work being commenced and shall be responsible for ensuring that these requirements are met. He shall also be responsible for ensuring that any trenches opened by him or for him do not constitute a hazard to the public. Where necessary he shall provide barriers and warning lights at night or any other protection of trenches or excavations as required by the Engineer or any statutory or local Authority requirements.

The Contractor shall be responsible for leaving all areas affected by cable trenches, holes in the ground, and any other work done by him or on his behalf, in a clean and tidy state, and for making good all tarmacadam, concrete, paved or grassed surfaces.

It will be the Contractor's responsibility to make good any subsidence that may occur within six months of back-filling trenches, and, in the case of tarred-surfaces, to remove and re-tar with new material.

C1001-9.2 Routing

The routes for the underground cables are shown on the drawings. Any proposed variation of these routes by the Contractor, shall be approved by the Engineer or Clerk of Works before trenching is done.

It shall be the Contractor's responsibility to ensure that the routes of the cables are correct. Where the Contractor is in any doubt regarding peg positions, he shall, after having obtained the approval of the Engineer, employ the services of a registered Surveyor to obtain the correct locations. Re-imbursement for the cost of such services will, subject to granting of approval, be made from the Provisional Sum included for this purpose. Any major deviation considered necessary must be approved by the Engineer. The Employer will make no payment for claims

for extra work arising out of the cable trenches being in the wrong place.

Routes shall run generally in road reserves parallel with and 1,0m from plot boundaries. Where no road exists or is not indicated, the route shall run in open ground adjacent to the plots and 1,0m from the plot boundaries.

C1001-9.3 Trenching and Excavation by Others

The Contractor is to co-operate closely with the trenching contractor at all times and is required to be in attendance during backfilling of all trenches, etc., to ensure that cables are not damaged in any way and that poles are correctly aligned.

C1001-9.4 Type of Material

Unless otherwise specified elsewhere in this Specification or Schedule of Quantities, Tenderers shall allow for excavating cable trenches and holes in earth. In addition, unit rates shall be provided for excavating in soft rock and hard rock.

The following definitions shall apply to the three categories. Where the conditions experienced are a combination of two or more of the conditions listed below, the Contractor shall be paid on rates in proportion to the contents of earth, soft rock or hard rock experienced in the excavations.

"Earth" shall mean ground that can be removed by hand and includes loose gravel, clay, made-up ground, loose or soft shale, loose ouklip, and boulders less than 75mm in diameter.

"Soft rock" shall mean all hard ground such as ouklip, hard shale, decomposed rock, loose boulders and large stones, etc., which require the use of pneumatic tools, mechanical rippers and/or excessive hard labour to excavate and remove economically.

"Hard rock" shall mean granite, quartzite, dolomite, or other rock of similar hardness, which can only be excavated and removed economically by blasting, wedging or breaking.

C1001-9.5 Verification of Excavation Claims

Notwithstanding any Provisional Amounts for excavation in rock included in the Schedule of Quantities, payment will only be authorised for excavation in ground other than earth upon submission of documentary proof of such excavation made and signed as correct at the time trenches or holes were excavated.

It is essential that, in all cases where rock has to be excavated, or where poles, etc., have to be stabilised with concrete or by other means, in loose sand or in soft or waterlogged ground or where substitution of the excavated material is necessary for backfilling, that the Engineer or Clerk of Works be notified before such excavation work is back-filled. This is for the purpose of having the soil conditions encountered noted and confirmed in writing.

The amounts and type of rock encountered shall be measured by the Contractor in the presence of the Engineer or Clerk of Works. This information, together with the date and locality, shall be entered by the Contractor in a suitable triplicate book furnished by him. These entries shall be signed by the above parties. The original sheet shall be submitted to the Engineer and the duplicate copy shall be attached, by the Contractor, to his monthly invoice.

C1001-9.6 Precaution with regard to other Services

The Contractor shall exercise extreme caution in his work to avoid damage to existing underground services. Certain services may be indicated on the drawings, but it is not to be assumed that these are the only services nor that their indicated position is entirely accurate. Such information is given as a guide only and does not negate the above responsibility. All excavation in the vicinity of other services must be-undertaken by hand.

C1001-9.7 Compaction

Particular care shall be taken in compacting pole holes, trenches crossing roads and those crossing or running under or within 1,0m of paved or tarred sidewalks. In trenches, the backfill shall be replaced in 150mm layers and four to six passes with a vibrating pan compactor shall be made per layer. Around poles, a jumping jack shall be used on each 150mm layer.

When clay is encountered, the Engineer should be advised and may instruct the Contractor to remove all such excavated material and replace it with more suitable material, which shall then be compacted as above. Where material is too wet for proper compaction, it should be dried out and if too dry, shall be dampened. When rain is likely to occur, all excavated material shall be suitably protected to prevent the necessity for later drying out.

In the case of road crossings, the excavated base and sub-base material shall be mixed and replaced up to the top level of the original sub-base, New material equal in composition to the original base course shall be supplied, this material being used for the full depth of the base course layer.

The degree of compaction required shall be field densities of 95% in respect of poles and road crossings and 90% in respect of sidewalks, of the Modified AASHO density, as measured by the Sand Replacement Method described in the "Standard Method of Testing Materials" issued by the Division of National Roads, Department of Transport, Private Bag 193, Pretoria.

The Engineer will, if the compaction is in doubt, arrange to have it independently tested and should the compaction prove to be below standard, the cost of the test will be debited to the Contractor, who will be required, at his own expense, to open and re-fill the trench or pole hole to obtain the specified compaction value.

In all other areas, backfill shall be replaced in 150mm layers and shall be hand tamped, the remaining material being heaped over the trench for later settlement.

C1001- 11 SLEEVES

Sleeves for cables shall be either PVC with single socket joints complying with SANS 791 (heavy duty) or fibre cement complying with SANS 1223 in the case of 50mm and 100mm sleeves (in compliance with SANS 0198: Part VIII) or with SANS 819 for larger sleeves, the sizes being as indicated on the drawings. Sleeves shall be nominal 100mm diameter unless otherwise specified. Pitch fibre sleeves shall NOT be used.

The sleeves shall extend at least 1,0m beyond each side of a road crossing and shall be effectively sealed at the ends. Each sleeve shall be provided with a draw-wire. At least one spare sleeve shall be provided at each crossing.

All sleeves shall be laid in accordance with SANS 1200 (LC) and at a depth of 900mm unless otherwise indicated. The radius of the bends used in the sleeves shall not be less than six times the diameter of the sleeve, and the sleeve not be less than twice the cable diameter unless otherwise specified.

Sleeves shall be laid on a 100mm compacted layer of selected bedding material or, if this is not available, on a 100mm sand bedding. The cover layer shall be hand compacted completely around the sleeves and to a cover of 150mm above the top of them. The sleeves shall be supported along their entire length by the bedding. A further 100mn layer of selected bedding material shall be added and this shall be compacted using four to six passes of a vibration pan compactor. Thereafter, the trench shall be back-filled and compacted as specified in the sub-Clause "Compaction" elsewhere in this Part.

Both ends of all sleeved crossings shall be marked by means of cable markers as elsewhere specified, labelled "cable sleeve".

The Contractor shall make all necessary arrangements with the appropriate Authorities for closing sidewalks and/or half the roadway at a time, and he shall comply fully with any statutory requirement applicable and any requirements the Authorities deem necessary. The surfaces shall be made good to the satisfaction of the authorities and the Engineer, but where tarring or paving is to be laid or re-laid, this shall not be done until the Engineer has given the necessary approval.

Where the HV or main LV cables cross over or pass under other services such as water or drain pipes, they shall be run in sleeves. Where these crossings present a particular hazard to the cable, the Contractor shall draw the attention of the Engineer to any such crossing requiring special attention.

All sleeves for Telkom cables will be 110mm diameter pitch fibre similar to Santar, supplied by the Regional Engineer, unless otherwise specified. These sleeves are to be laid under this Contract and must be kept at a minimum of 0,6m horizontally from and 0,3m vertically above any power cable sleeve. They are to be laid at a depth of 800mm and one end is to be provided with a marker labelled "Telkom".

C1001- 12 CABLES

C1001-12.1 Description

PVC insulated cables for LV shall be to SANS 1507 and shall consist of PVC insulated conductors, PVC bedding, galvanized steel wire armouring and PVC sheath.

The abbreviation for this type of cable is PVCAS.

Paper insulated cables shall, unless otherwise specified elsewhere in this Specification, be of the screened type suitable for use on an earthed system and complying with SANS 97. They shall be led sheathed, bedded with two bituminised paper tapes and one layer of fibrous material and preferably armoured with two layers of steel tape or alternatively with a single layer of galvanized steel wires, both served with bituminised fibrous material. Such cables shall comply with Table 19 of SANS 97 and shall be non-draining. They shall have a sheath of lead alloy 'E' and/or be PVC served only if called for elsewhere in this Specification.

The abbreviation for this type of cable is PILCA

Cross-linked polyethylene cables shall be Type A suitable for use on an earthed system and complying with SANS 1339, being individually screened and armoured, unless otherwise called for elsewhere in this specification.

The abbreviation for this type of cable is XLPE

Service cables may be multicore PVC insulated and wire armoured, and PVC served (PVCAS), concentric neutral or "Airdac" as specified elsewhere in this Specification.

Concentric neutral cables shall be XLPE insulated complying with SANS 1268. "Airdac" cables shall be XLPE insulated with copper conductors, the phase conductor being contained within a radial band of insulated neutral and bare earth conductors, the whole being XLPE served. All cables are to be installed in compliance with the Manufacturer's recommendations.

The sizes indicated are for cables with copper conductors unless otherwise specified. For LV systems aluminium conductor cables may be offered as an alternative, if a price advantage can be shown. In such cases both the resistance and current carrying capacity of the aluminium cables offered must compare suitably with the sizes of copper conductor indicated. Where cables offered are other than those specified, Scheduled Rates for the supplying, laying, jointing and termination of the cable shall be entered in "Departures from the Specification". The Contractor will be responsible for advising equipment suppliers of the type of cable termination required if a cable other than that specified is accepted.

C1001-12.2 Cable Lengths

All scheduled cable lengths are for tendering purposes only and the Contractor shall measure the actual lengths required before ordering.

The length of all cables will be re-measured after installation and the lengths indicated in the Bill Schedule of Quantities will be adjusted accordingly. The Contractor will be paid for the actual lengths measured on site and any allowance for snaking, joints or ends must be incorporated in the unit price.

C1001-12.3 Handling of Cables

Particular care shall be taken in handling drums of cable. Cable drums shall not be dropped or allowed to roll unchecked. The drums shall, under no circumstances, be rolled in any direction other than that indicated by arrows thereon.

When running cable off a drum it shall be properly and securely mounted so as to rotate without difficulty and the spindle supporting it shall be straight, horizontal, supported at both ends and of adequate strength. Cable shall only be removed from the drum by rotating the drum. The inner end of the cable shall be released before running any cable off the drum.

Care is to be taken to ensure that each length of cable is run off the drum sequentially so that a crossed core situation does not arise at joints.

No cable shall be bent to a radius less than 12 times the overall diameter of the cable, Bending or straightening shall be done slowly. PILCA cable shall not be laid if the temperature falls

below 10□C.

Should a cable inadvertently become damaged or the lead sheath or end cap punctured, this fact shall be brought to the notice of the Engineer immediately, who shall decide what further action is to be taken. The Engineer shall also be notified immediately should there be any suspicion of moisture having entered a PILCA or XPLE cable.

C1001-12.4 Cables fixed to Surface

Where cables enter flush boards from cable sleeves, the sleeve shall turn up to floor level and a duct shall be forced in the wall to accommodate the cable.

Care shall be taken to ensure that the bending tolerance of the cable is not exceeded in drawing the cable into the sleeve. The duct shall be of sufficient size to accommodate the cables. The edges of the duct are to be lined with timber battens to which a bevel edged metal cover is to be screwed; using countersunk headed screws and cup washers.

Wherever cable saddles or any other items are to be fixed to structural components, the use of dry plugs of wood will not be permitted. 'Rawl plugs' or other plugs to approval only shall be used. Surface mounted cable protection pipes shall be galvanized and shall be fixed with saddles of 32mm x 3mm galvanized strap bolted to the wall using bolts grouted in, 'Rawlbolts' or similar. All cables rising on the outside of buildings or on poles shall be protected by such pipes to a height of 2,0m above ground level. Where a cable is installed fixed to a pole, it shall be attached to the pole using stainless steel "Bandit" strap or equal. Care shall be taken to ensure that the straps are tightened correctly and that they do not distort or indent the cable sheath.

C1001-12.5 Cables laid in Trenches

HV cables shall generally be laid 1000mm and LV cables at 600mm below ground level. Where two HV cables are run in the same trench, they shall be laid a minimum of 300mm apart with separate cable slabs over each cable. Where HV and LV cables are laid in the same trench, the HV cable shall be located on the road side and the LV cables on the plot side of the trench. A horizontal distance of not less than 400mm shall be maintained between the cables of different voltage groups. Where a number of LV cables are run in the same trench, they shall be laid with a minimum separation of 100mm. This applies to feeder cables only and not street lighting and service cables which shall be only 25mm apart. Cables shall not cross each other.

Where cables run across even parallel to lateral boundaries, they shall be located 1,0m from the boundary at a depth of 1,0m. If so, specified they shall be run in sleeves, otherwise both HV and LV cables shall be protected by cable slabs and a PVC sheet marker laid 300mm, above them.

The trench bottom shall be cleared of all sharp or protruding stones. The trench is then to be refilled with 150mm of soft material and compacted. A further layer of soft material shall be installed after the cables are laid to provide 200mm cover for the cable when compacted. Protective cable slabs a minimum of 50mm thick x 230mm wide shall then be laid in the case of HV cables, and PVC sheet cable marker strip 450mm wide with indelibly printed warnings every 150mm along its length, in the case of LV cables. In cases where HV and LV cables run in the same trench, 100mm of soft bedding for the LV cables shall be situated above the protective cable slabs. Lmere LV service cables or street lighting cables only are installed, a clean trench bottom and soft material back-fill only is required, and no PVC sheet marker.

The soft material described above may be either sand or back-fill material sifted through a 3,0mm mesh grid. Where the bottom of the trench consists of only soft sandy material, the bedding underneath the cable shall be omitted, and the cable shall be laid on the trench bottom at the correct depth. Permission must be obtained from the Clerk of Works or the Engineer for the cable bedding to be omitted in such instances. Where sand has to be brought to site, the quantity must be measured and confirmed by the Engineer or Clerk of Works.

The balance of the trench is to be back-filled with excavated material from which all stones, etc. greater than 100mm in size have been extracted. All such extracted material is to be removed from site.

Cable route markers shall be provided for all HV and main LV feeder cables at road, culvert and Telkom cable crossings, at all changes of direction, at joints and at intervals not exceeding 60 metres along the straight. Cable route markers shall comprise concrete blocks in the shape of truncated pyramids 300mm high, 150mm x 150mm at the top and 225mm x 225mm at the base.

An aluminium plate 3,0mm thick minimum, with four rods 75mm minimum welded to it on the underside, shall be cast into the top of the concrete block, and the plate shall have stamped on it the cable data and direction arrows, and at a crossing, the crossing shall be indicated.

The cable route markers shall be placed over the cable, in the trench way, and shall protrude 25mm above the finished ground level but not where they are likely to cause an obstruction or be in the way of moving traffic. Joint markers shall indicate as such. The Contractor shall ensure that the ground under and around the cable marker is properly compacted.

C1001-12.6 Laying of Cables with other Services

Where cables are laid in trenches containing water and other pipes, etc., the Contractor shall arrange with the Civil Engineering Contractor and Engineer, to lay the electrical cables along one edge of the trench with the other services occupying the other edge. The cables shall be laid not less than 600mm from such service unless otherwise approved by the Engineer.

At road and services crossings, sleeves as described elsewhere herein shall be provided, one for each HV cable and a separate sleeve for other cables, unless otherwise indicated on the drawings.

At Telkom cable crossings, power cables shall cross 300mm below and at right angles to all such cables or sleeves for future cables. The power cables shall be enclosed in asbestos cement split sleeves with cable slabs over, both of which shall extend 1,0m either side of the crossing. The two sections shall be firmly fastened together with robust stainless-steel straps. The full length of all such sleeves shall be covered by cable slabs installed 150mm above the sleeve. No power cable running parallel with a Telkom cable shall be laid within a distance of 1,0m measured horizontally from the Telkom cable. Wherever existing buried Telkom cables are encountered, strict precautions and care shall be taken, and close supervision given. Any damage to, or disturbance of Telkom cables whatsoever shall be immediately reported and confirmed in writing to the Engineer.

C1001-12.7 Labelling of Cables

All cables shall be labelled with 3mm high letters punched onto aluminium tape attached to the cable with aluminium wire. The label shall state the cable size and number of cores. All main feeder cables shall also be labelled to state from whence they are supplied. The labels shall be so installed that they are easily readable.

C1001- 13 CABLE TRAYS

These consist of two basic types, i.e. perforated and folded or wire mesh comprising Light, Medium and Heavy Duty. The actual type and duty required, and the finish if not as set out below, is specified elsewhere in this Specification.

Perforated and folded trays:

Light duty tray shall be manufactured from pre-galvanized perforated sheet steel. The minimum material thickness shall be 1,0mm for tray widths not exceeding 150mm and 1,2mm for widths not exceeding 300mm. Turned-up edges shall not be less than 12mm for tray widths not exceeding 230mm and 20mm for widths not exceeding 300mm. Maximum spacing between supports shall be 1000mm.

Medium duty “Standard” or “Marine” tray shall be manufactured from 1,2mm thickness perforated sheet steel with turned-up edges of not less than 12mm for tray widths not exceeding 100mm, and 19mm for tray widths not exceeding 600mm. The tray shall be hot dip galvanized after manufacture. Maximum spacing between supports shall be 1200mm.

Heavy duty “Heavy Duty” tray shall be manufactured from 2,5mm thickness perforated sheet steel and shall have turned-up edges of not less than 75mm. The tray shall be hot dip galvanized after manufacture. Maximum spacing between supports shall be 2400mm.

Welded wire mesh:

Medium duty tray shall be manufactured from 4,0mm wire and shall have turned-up edges of not less than 50mm. The tray shall be hot dip galvanized after manufacture. Maximum spacing

between supports shall be 1500mm.

Heavy duty tray shall be manufactured from 4,0mm wire and shall have turned-up edges of not less than 75mm. The tray shall be hot dip galvanized after manufacture. Maximum spacing between supports shall be 1500mm

Splicing pieces, bends and tee pieces shall be provided to suit the cable tray system. These shall be of an approved make conforming to the width and quality specification of the particular cable tray being used.

Trays are to be installed in accordance with the Manufacturer's recommendations, supported in such a way that they are carried on cross members cantilevered from a vertical support so that cables do not have to be threaded between the supports. Trays on walls are either to be carried horizontally on right angled brackets or fixed vertically to the wall. All hardware, support brackets, etc., shall be hot-dip galvanized. Support brackets shall be spaced so that a sag of 1/200 is not exceeded with the tray fully loaded. Further, the maximum spacing limit specified above shall not be exceeded.

Where trays are likely to be damaged because of their proximity to a working area and could therefore be stepped on or similar abused, they are, if at all possible, to be installed out of the way of such abuse. Where this is not possible, only heavy-duty tray is to be used and additional longitudinal support in the way of angle iron of suitable size is to be installed.

Where the width of cable trays is unspecified elsewhere in this Specification, they shall be sized to accommodate 20% more cables than the number presently to be installed on the basis that the future cables will be of the same average size.

Unless otherwise specified, all cables over 16mm2 are to be spaced at least 12mm apart. Where cables are laid flat on trays, fixing is required for all cables larger than 16mm2 using heavy duty nylon cable ties. Where fixed in the vertical plane, all cables are to be strapped to the trays using stainless steel strapping applied with an approved tool. This also applies to single cables fixed to trusses or other parts of the structure and to all cables fixed to cable trays in a physically vulnerable situation.

C1001- 14 CABLE JOINTS AND TERMINATIONS

C1001-14.1 General

Cable jointing and termination shall be carried out by a qualified cable jointer using only approved standard methods for the particular type of cable. Proof of his training may be required.

Joints in all cables shall only be made at full drum length intervals, but where necessary and when approved by the Engineer cable through joints may be used in other approved positions.

Where a cable has steel wire armouring all strands of armouring shall be through jointed.

Cable connections shall be made by means of crimped or sweated lugs, firmly bolted, one plain and one lock washer being placed under the nut, so that the plain washer is against the lug and there shall be no washer between the lug and the terminal. A plain washer is also required under the bolt head. Alternatively, sweated stems fitting into clamp connections will be acceptable.

Crimped lugs up to 70mm² shall be fitted using manual tools and hydraulic tools from this size upwards. Approved tools are to be used in both cases. A hydraulic tool is to be used on all sizes of aluminium cable. Where a single point hydraulic crimping tool is used, the lug shall be crimped in three places. Where a hexagonal die is used, this shall extend the full length of the lug.

Where aluminium cored cables are to be connected to circuit breakers, the aluminium cable lug shall be bolted to a copper tag or tail which is to be connected to the circuit breaker. The Contractor shall ensure that sufficient Denzel paste is installed on the faces of the lugs.

Where an aluminium cable is to connect to copper, the lug shall be a bi-metal type lug with a copper spade and an aluminium ferrule friction welded to the spade.

Cable connections shall be made using brass bolts, nuts and washers, together with a star lock washer, on all kiosks, fused feeder panels and mini-subs and with cadmium plated steel bolts and nuts on all indoor equipment. All bolted joints shall be taped with self-vulcanising (not

adhesive) tape.

Where cable connections are required to the HV and LV terminals of transformers, these shall be made off as follows: -

Red Phase to Terminal A

White Phase to Terminal B

Blue Phase to Terminal C

All transformer connections shall be kept in strict phase rotation and where two or more units are to operate in parallel, the respective connections are to be checked for phase rotation and polarity. In the case of cable terminations to transformer bushings the cable itself shall be clamped substantially to a post adjacent to the transformer, connections to the bushings being puttied and taped.

All connections are to be colour coded.

C1001-14.2 LV Cable Terminations

PVCAS cables shall be made off using adjustable mechanical glands. Care shall be taken to ensure that armour wires are correctly seated in the gland and that all parts are properly tightened. Outdoors, in damp situations and in all mini-subs and kiosks, neoprene waterproofing shrouds are to be fitted over all glands.

Where cable connections from mini-subs and kiosks to consumers and street lighting are excluded from this Contract, the Contractor shall, nevertheless, ensure that sufficient space is left on the gland plate for the future cables.

Wherever PVCAS cables are terminated to overhead lines a suitable moulded heat shrinkable glove to affect a watertight seal at the crotch shall be used, in accordance with the manufacturer's instructions. Alternatively, a PVC cable cap may be used.

C1001- 15 CABLE TESTING

On completed sections of laid, jointed and terminated HV cables, a high voltage DC test of 15 minutes duration shall be carried out by persons qualified to make such tests.

Contractors must note that where such tests will include sections of cable which have already been in service, the test voltages and duration are to be reduced in accordance with the Engineer's instructions.

Cable tests shall be in accordance with the following:

PILCA cables	-	SANS 97, Annex A-3.3
XLPE cables	-	5000v megger test between cores and to earth unless additional tests are ordered by the Engineer, or are called for elsewhere in this Specification.
Method	-	SANS 0198: Part XIII

C1001- 16 CABLES FOR EARTHED SYSTEMS

(Based on SANS 97: Table A-2)

Type	**PVCAS****	**BELTED**		**SCREENED**		**XLPE****	
Rated voltage	600/1000	11000	22000	11000	22000	11000	22000
Between conductors - DC	3kV	31kV	60kV	-	-	18kV	36kV
Conductors to screen - DC	-	-	-	19kV	36kV	18kV	36kV
Conductors to earth - DC	3kV	19kV	35kV	19kV	36kV	18kV	36kV

** Test only when specifically called for
** Obtain instructions from the Engineer before testing

C1001- 17 SITE LIGHTING

C1001-17.1 General

Site lighting poles and luminaries to be installed under this Contract, including the type, mounting height, outreach dimensions, quantities, etc., are detailed elsewhere in this Specification. All poles offered shall conform in all respects to the requirements of the Occupational Health and Safety Act where applicable and to SANS 0225, Code of Practice for the Design and Construction of Lighting Masts. In particular they shall comply with the requirements regarding design wind loadings and factors of safety.

Poles shall have neat flush access openings with the bottom of the opening 350mm above ground level. The opening shall have radiuses corners and shall be adequately sized to facilitate installation of the specified electrical equipment. The minimum size shall be 140mm x 355mm unless otherwise specified.

The opening shall be provided with a neat flush weather-proof door fitted with a tamper proof locking device designed to secure the door firmly in position and prevent unauthorised access into the base compartment.

A minimum of four access door keys shall be supplied to the Employer on completion of the installation. A receipt shall be obtained from the Employer for these keys and a copy of this receipt shall be submitted to the Engineer with the final progress claim.

A hardwood fixing block shall be fitted within the base compartment. The dimensions of this block shall not be less than 380mm x 125mm x 25mm thick.

A threaded 12mm earth stud shall be provided in a convenient position in the base compartment to facilitate earthing of electrical equipment.

Baseplates shall be provided for all poles. These shall be a minimum of 610mm x 610mm x 6mm thick and shall be provided with drain holes. Baseplates shall be bolted in position by means of a minimum of 2 x 20mm diameter hook bolts.

Spigots shall be provided to suit the luminaries specified elsewhere in this Specification. Particular care shall be taken to establish the exact diameter and length of the spigot or spigots required such that the luminaire fits neatly up against the shoulder formed between the pole and the spigot. Care shall be taken to avoid damage to the spigots during transport, storage and erection.

C1001-17.2 Erection of Poles

Poles shall be planted in the positions indicated on the drawings. They shall be planted absolutely plumb with the outreach at right angles to the carriageway edge, where applicable.

Should any pole position coincide with trees, building canopies, driveway entrances, overhead conductors or other obstacles, an alternative position is to be confirmed with the Engineer before excavation of the pole hole.

Where poles line a road, they shall be carefully aligned with each other to form straight lines or smooth curves generally following the alignment of the associated roads. The planting depth shall be carefully controlled to ensure that all luminaries will be at the same height above the level of the carriageway.

Care shall be taken when backfilling around the pole to ensure that compaction is even all around the pole and is to the requirements specified in the sub-Clause "Compaction" elsewhere in this Part. Where poles are to be planted in fill material, on ramps, etc., one pocket of dry cement shall be mixed with the backfill material before commencing backfilling and compaction. Subject to the prior approval of the Engineer, this technique shall also be applied wherever it is considered necessary to stabilise the pole due to unsuitable soils, etc. Where the Contractor feels that this situation exists, he must advise the Engineer immediately and obtain a decision.

C1001-17.3 Luminaries

The types and wastage of the luminaries required are detailed elsewhere in this Specification. The lighting design has been based on the photometric performance of the specified luminaries

and the tender price must be based on the supply of these luminaries.

Alternative offers based on the use of luminaries other than those specified may be submitted in accordance with the requirements of the Clause "Alternative Offers" in Section A of this Part.

Such offers must, however, be accompanied by a complete set of photometric data on the luminaries offered, comprehensive details of the construction of the luminaries and a complete set of design calculations based on the requirements of SANS 098.

Unless otherwise stated, the luminaries are to be provided with tapped ballasts and power factor correction capacitors. It will be stated elsewhere in this Specification whether control gear is to be integral with the luminaire or remote mounted in the pole base compartment.

Where control gear is to be mounted in the pole base compartment, it shall be the Contractor's responsibility to ensure that the dimensions of the base compartment and access opening are adequate, notwithstanding the minimum dimensions specified herein.

C1001-17.4 Electrical Connections

No cable glands or gland plates are required for the termination of PVCAS cables in site lighting poles. The cable shall be brought up to a convenient position adjacent to the lower section of the access opening. The outer PVC sheath shall be stripped back, and the steel wire armouring pulled away from around the cables, twisted into compact tails and bonded together by means of an adequately sized line tap.

A separate earth conductor shall be taken from this line tap to the earth stud in the pole base compartment. Phase and neutral conductors shall be jointed using shrouded line taps and the cables neatly secured to the bottom of the hardwood fixing block by means of saddles.

Unless otherwise specified elsewhere in this Specification, the phase conductor to the luminaire control gear shall be protected by a CBI type "STI", 20A streetlight MCB attached to the hardwood block.

Where luminaire control gear is to be mounted in the pole base compartment, it shall be firmly secured to the hardwood block above the MCB. The earth stud on the control gear housing shall be connected to the earth stud in the pole base compartment.

Phase and neutral conductors between the pole base and luminaries shall be 1,5mm² PVC insulated for luminaries up to 400W and 2,5mm² PVC insulated above this rating.

The phase to which each luminaire is to be connected may be indicated on the drawings. It is essential that this arrangement is strictly adhered to.

Photo-electric Controls

Where called for elsewhere in this Specification, a photo-electric control unit shall be used to switch the site lighting installation. Photo-electric switches shall be of the type comprising a photo-sensitive resistor, thermal actuator with an inherent operating delay to make it insensitive to short duration changes in light levels and a change-over switch mechanism, all housed within a tough, translucent, weather and ultra-violet resistant cover. The operating level shall be factory pre-set to switch on at approximately 50 lux and off at approximately 100 lux. The response time after sudden changes in light level shall be not less than 15 seconds.

Integral protection against voltage surges shall be provided.

A suitable unit would be the "National" type ZS-20AR.

Where the photo-electric switch is pole mounted it shall be positioned in such a way that it will not be affected by spill-light from the site lighting installation or by vehicle headlamps, but where possible it should be mounted on a substation or at the rear of a mini-sub.

C1001-17.5 Completion and Testing

Immediately after completion of the installation, the site lighting system shall be switched on and lamps allowed to stabilise for at least one hour. Any faulty lamps shall be replaced. The voltage at each luminaire shall be measured and toppings on the ballasts set accordingly.

C1001-17.6 Guarantees and Maintenance

The installation shall be guaranteed, and maintenance carried out in accordance with the

requirements detailed elsewhere in this Specification except that, where no other defects or maintenance procedures requiring the Contractor's attention exist, the installation of replacement lamps supplied by the Contractor will be carried out by the Employer's maintenance personnel, unless otherwise specified elsewhere herein. Under no circumstances is any spare equipment or lamps elsewhere specified to be used for replacement during the foregoing period.

C1001- 18 WIRING IN CONDUIT

PVC insulated wire to SANS 1507 and 1574 shall be used and shall be from full coils of fresh stocks delivered to site with the original packing or seals undisturbed.

Lighting circuits shall be wired with 1,5mm², socket outlet circuits with 2,5mm² and heater and water heater circuits with 4mm² wire unless otherwise specified. All other circuits shall be wired with the sizes indicated or in accordance with the Wiring Code, as appropriate. All phase conductors shall be coloured red and neutral conductors black.

The ends of all wires, whether single or looped, which have to be connected to the connecting terminals of switches, plugs, holders, fittings and distribution boards, are to be tightly twisted together. Cutting away the wire strands will not be allowed.

The loop-in system is to be adopted throughout any conduit installation and joints will be permitted only in special circumstances and subject to the approval of the Engineer. Such joints shall be made only with approved connectors in approved boxes.

The circuit wiring for different services, e.g. lighting and power, shall be run in separate conduits.

Where switches fed from different phases are mounted adjacent, they must be mounted in separate boxes or a single box with a fixed metal barrier between each switch. Where such switches are on the same circuit, multiple switches in a single box shall be used.

Metal conduit shall be heavy gauge solid lap welded steel to SANS 1065, screwed or plain-end and black enamelled or galvanized, both as specified elsewhere in this Specification.

All metallic conduit shall be manufactured from mild-steel with a minimum thickness of 1,6mm in respect of screwed and 0,9mm for plain-end conduit except that when used in concrete slabs, plain-end conduit shall have a minimum wall thickness of 1,2mm and when laid in screed on top of concrete slabs, 1,6mm.

Non-metallic conduit shall comply with to SANS 950. Installation of non-metallic conduit shall be in accordance with Amendment No.2 of SANS 950 Appendix C. Only plastic saddles and compatible fittings shall be used. Earth wires shall be installed with all non-metallic conduits.

All conduit fittings for steel conduit shall be malleable iron or pressed steel except for brass bushes. Plastic fittings shall be used with non-metallic conduit. Conduit fittings shall comply with SANS 950 or 1065 as appropriate. The use of inspection tees or elbow pieces and internally screwed solid bends will not be permitted. However, internally screwed solid bends for 40mm and 50mm dia. conduit may be accepted in certain circumstances if approved by the Engineer.

All conduit shall, wherever possible, be concealed by being cast in concrete slabs, chased in, built in or run in roof spaces. Where black enamel conduit is called for, this shall be substituted with galvanized when run in non-suspended floor slabs such as ground floor or basement floor slabs. When run in surface beds conduit is to be galvanized and is to be laid in concrete on the surface bed so that it is completely covered.

Conduit cast in concrete shall be fixed at intervals to the form work, if such form work is of wood or, if of steel plates, to the steel reinforcing. Where hollow tile slabs are being used in the structure, as indicated elsewhere in this Specification, back entry conduit boxes shall be used. All outlet boxes for lighting points shall be of the long spout, deep type. Where additional depth of box is required, standard conduit box extension rings, firmly screwed to the box, shall be used.

Where structural expansion joints occur, conduits shall, as far as possible, be laid to avoid crossing the joint. When crossings are unavoidable, the following arrangement shall be made, from a drawbox, or the nearest outlet within 4,0m of the joint, conduit of one size larger than necessary for the wire sizes, shall be run straight, and at right angles to the joint, finishing at the joint. Conduit of the required size shall then be passed into this from the other side of the joint, bushed inside the draw-box, but not mechanically connected otherwise. Care shall be taken to prevent concrete from entering the end of the larger conduit. The conduits approaching from

both sides of the expansion joint shall be wrapped with two layers of corrugated cardboard from a point 1,0m from the joint. A bare earth wire of the same size as the wiring in the conduit shall be run from the drawbox to the next outlet, connecting firmly and solidly to each box. Care shall be taken to exclude the ingress of dirt or moisture to partially completed runs, and all open ends shall be plugged temporarily while work is not actually in progress. The plug may consist of a conduit socket with brass ET plug or conduit fishtail, or purpose made tightly fitting plastic sealing caps. Wooden or paper plugs will not be acceptable.

The Contractor shall take all possible precautions during the construction Stages of the building to prevent damage to projecting conduits, etc. In vulnerable positions projecting conduits shall be painted in a bright colour or, if necessary, shielded by a large covering. A responsible workman shall be present at all times during casting of concrete containing conduit work to ensure that the conduit work is not disturbed by the casting or vibration of the concrete.

Conduit in false ceiling spaces shall be run surface. The conduit into the space shall either extend through the decking or shall be terminated in a back entry box with a coupling inside the box to enable the conduit to be extended when shuttering is removed.

In roof spaces all conduit runs shall be parallel or at right angles to trusses and joists. Where conduits run along trusses and joists, they shall not be run or fixed on the top but on the side. Conduit shall lead into and out of back entry conduit boxes at all fitting positions. All such boxes shall be finished flush with the underside of the ceiling and the lighting fittings shall be screwed directly onto the box. Where necessary, an additional fitting and conduit box shall be provided.

At ceiling positions where conduit runs do not have to continue to the next truss (e.g. last point in a row), the conduit shall be extended beyond the box to the next truss. This conduit extension shall be plugged.

Where conduit is run on the surface, it shall be fixed with stand-off saddles; multiple spacer saddles being used for conduits run together, the maximum distance between the saddles shall not exceed 1,5m. Where a conduit box carries lighting fittings it shall be fixed within 100mm on either side of the box.

Where conduits have to run adjacent to gas or cold water pipes, communication or data circuits, they shall be prevented by spacing or other means from coming into contact with these other services under any condition.

Under canopies, outlets for future signs, etc., which have been terminated in round conduit boxes, are to be blanked off with 75mm dia. galvanized cover plates finished with a zinc plum bate primer. These are to be fitted prior to painting and are to be fixed using cheese-headed brass machine screws.

Where conduit enters boards, trays, etc., all burrs around holes shall be removed before insertion. Locknuts shall be used inside and outside, with female bushes inside. Couplings and male bushes shall not be used. The same arrangement shall be used wherever possible for entry into switch boxes, control gear, etc., provided with clearance holes. Where this arrangement does not allow sufficient wiring space, however, couplings and hexagonal male bushes may be used, but must be very tightly screwed up. In the case of multiple back entries into a conduit box, male bushes and couplings are to be used. Care must be exercised when laying conduit in the vicinity of distribution boards of any type to ensure that conduits radiate from these points in order. Under no circumstances are more than two conduits to cross at any point where cast in concrete and a space of at least 20mm must be left between all conduits both vertically and horizontally after emerging from the distribution point. Careful planning of conduit work can prevent a mass of conduit in the slab, and any re-arrangement necessary to provide an acceptable layout will be at the Contractor's own expense.

Drops to switch and other high-level outlets shall be from ceiling while conduit to low level outlets shall be run in the floor unless specified to the contrary. In basements and ground floor areas which are below natural ground level, all conduits to any type of outlet shall drop from ceiling level.

No draw boxes which are not, in themselves, outlets shall be permitted except with authority from the Engineer.

Notwithstanding the Wiring Code, if it proves necessary to draw conductors round more than two 90□ bends, or the equivalent, or on very long straight runs, draw boxes are required. The maximum length of straight runs between draw boxes shall not exceed 20m. Such draw boxes shall be provided with oversize flat covers fitted flush with the ceiling, fixed with cheese-headed screws.

The Contractor is responsible for checking with the Building Contractor by reference to the drawings on site, of the positions where panelling, tiling, tile edging or dados, etc., may affect the exact positioning of outlets. No allowance for extras will be allowed if boxes have to be moved to comply with the above unless the details are altered after completion of the conduit work. Exact positioning in general means centre outlets on panels, fitting box edges to tile edges, and dropping or raising switch points below or above dados as close to the specified position as possible. Where any doubt arises, the Engineer shall be consulted before installation of the outlet. The same requirement applies to the positioning of lighting outlets in false ceilings, with particular regard to fixing fittings to correspond to ceiling panel modules.

Ceiling light points are normally either on a centreline between walls and/or beams or spaced evenly with half a unit between wall or beam and the first point. Where outlet positions deviate from this scheme the scaled dimensions to the centre of the symbol are to be taken as the centre of the outlet.

All setting of conduit shall be done with approved tools. No kinks will be accepted. Where necessary, boxes with special configurations shall be used to avoid the necessity for too many sets in conduit work.

The conduit shall be run or erected as far as possible in straight or symmetrical lines, with easy sets or bends. Care shall be taken when installing conduit that cut ends are completely free from burrs and sharp edges which might damage the conductors. All open ends shall be fitted with brass bushes. Composition bushes will not be accepted. All bushes are to be fitted prior to wiring. All running joints shall be fitted with lock-nuts, and lock-nuts shall be provided wherever necessary to ensure that all conduit joints in the installation are tight.

Where flexible conduit connections are required, only "Kopex" or "Adapterflex" flexible conduit or similar approved shall be used. “Sprague” conduit will not be accepted.

Where conduit only is required, draw-wires shall be left in each such conduit, irrespective of the service for which it is required. Draw-wires shall be minimum 1,6mm dia. hot dipped galvanized steel.

Conduit run on the surface within ducts shall be painted an approved colour under this Contract. Conduit in false ceilings and roof spaces is not to be painted, except as hereunder. Painting shall be carried out by a qualified painter. Any exposed screw threads or areas where the galvanising or enamel has been damaged shall be painted after erection with two coats of anti-corrosive paint, and, where installed in concrete, before casting, unless otherwise approved by the Engineer.

The Contractor must ensure that, prior to final completion, all openings left at the conduit exit from switch rooms or between floors in rising ducts, are made good.

C1001- 19 WIRING TRUNKING

This shall be used where indicated elsewhere in this Specification and shall be of the type specified. Where trunking is to be fabricated of sheet metal, this shall be of 1,0mm minimum thickness. Each length shall be so constructed that it matches identically with the other lengths and the lengths shall be joined by splicing sections inside the trunking. All trunking shall be provided with covers of the type and material elsewhere specified in this Specification.

All trunking shall be finished by degreasing, suitably primed and painted with two coats of high-quality enamel, unless otherwise specified. Where galvanising is specified, this shall mean fabrication from pre-galvanized plate unless hot-dip galvanising is specifically called for. Electro-galvanising will not be accepted.

"Unistrut" or equivalent trunking shall be provided to the catalogue number indicated, otherwise shall be of appropriate size for the purpose. The standard cover shall be of PVC of a colour to match the trunking. Other types of cover required will be specified elsewhere in this Specification.

All trunking shall be installed straight and level and shall incorporate all recommended fixings when of proprietary makes. Plastic clips shall be installed at not more than 1200mm centres to hold wiring in place when covers are removed.

Earth wires shall be run in all wiring trunking and these shall be bonded to all equipment fed by wiring carried in the trucking and to the trucking lengths themselves.

When trunking is cast into structures it shall be taped to prevent the ingress of slurry and it will be the Contractor's responsibility to ensure that the trunking runs true. Where trunking is fitted to

pre-formed slots in the structure or built into brickwork, the trunking shall be adequately braced to prevent deformation of the sides during plastering, resulting in the bowing of the cover when finally fitted.

Where light fittings cross ceiling trunking, the cover strip shall be cut square to abutted the fittings, and the raw edges, if of metal. shall be painted to match the applied finish.

Skirting trunking shall be as specified elsewhere in this Specification, the general remarks above being deemed to apply.

C1001- 20 BUSBAR TRUNKING

Bus-bar trunking for LV systems shall comply with SANS 784 and shall consist of metal-enclosed copper or aluminium bus-bars intended for use indoors at voltages not greater than 1000V.

Bus-bars shall be spaced apart and held in position by robust insulating material and shall be sufficiently strong to withstand the rated fault level without failure, all in accordance with the abovementioned SANS Specification.

The metal enclosure around the bus-bars shall be sheet metal of sufficient thickness to provide adequate rigidity and strength under fault conditions. The metal enclosure shall be treated adequately against corrosion by means of hot-dip galvanizing or enamel coatings in accordance with SANS 784. Ventilation openings shall comply with IP 3Q and with the vermin proofing requirements set out in the Particular Specification.

Bus-bar trunking systems shall be installed strictly in accordance with the manufacturer's instructions and the relevant provisions of SANS 0142.

No protective devices shall be provided within the bus-bar trunking system (except as described in SANS 784) and outgoing circuits or tee-offs shall be adequately protected from over current by fuses or circuit breakers.

Expansion joints shall be purpose made and shall be installed at such intervals as recommended by the manufacturer.

Fire-resistant barriers shall be purpose made and shall be installed where bus-bar trunking passes through walls and floors and shall be installed strictly in accordance with the manufacturer's instructions. The opening through the wall/floor around the fire-resistant unit shall be fire stopped with non-combustible/fire-retardant foam in compliance with the National Building Regulations SANS 0400.

C1001- 21 MICC CABLE

MICC cable shall be installed and terminated by persons experienced in the use of this type of cable. The Engineer shall have the right to call for a demonstration to prove this experience if considered necessary.

Cable sizes shall be as specified or shown on the drawings, lighting circuits being in 1,5mm² and socket outlet circuits in 2,5mm² cable, unless specified to the contrary. Where no size is given, this shall comply with the appropriate table in the Wiring Regulations. Cable shall be 660 volt or 250-volt grade, as appropriate.

Cables shall not be bent to radii less than six times the diameter of the cable without prior consent of the Engineer. Where this consent is given, re-straightening of sharper bends will not be permitted.

All cable shall be free from kinks and dents and shall be run straightening and true. A straightening tool shall be used to prepare the cable. All cable shall be properly handled to prevent damage. All unsightly or un-workmanlike work will be rejected.

The cable shall be fixed with single or multiple heavy gauge copper saddles attached with brass screws at the following spacing. When run vertically the distance between saddles may be doubled. Plastic saddles will not be permitted. Where-PVC served cable is specified, plastic coated saddles are to be used for fixing.

The following are the maximum spacing acceptable but where neatness is of particular importance, the spacing are to be halved.

Up to 6,6mm	600mm
From 6,7mm to 9,5mm	900mm
From 9,6mm to 12,7mm	1200mm
From 12,8mm to 19mm	1500mm
From 20mm upwards	1800mm

Where cables are run on cable trays, they shall be strapped to the tray at the above spacing. In the case of single core cables these shall be in circuit groups, in trefoil formation. Both ends of such runs shall be solidly bonded and earthed across the sheaths.

Where cables are to be buried underground the trench shall not be less than 600mm deep, and the cable shall be PVC served. The cable shall be laid in sand to a depth of 50mm, both above and below the cable, and if not in a sleeve, shall be covered with concrete slabs. The installation shall otherwise comply generally with the Clauses "Cables" and "Trenching, Excavation and Compaction" elsewhere herein.

Cables shall be terminated in screw-on type pot seals using general purpose plastic sealing compound suitable for temperatures up to 150○C, unless otherwise specified. Above 80□C a silicone bonded glass cap and PTFE sleeving is to be used. The seals shall be fitted in accordance with the manufacturer's instructions using recommended crimping and compression tools. The pot seals shall be fitted into matched glands.

All glands, which shall be of the ring type, and locknuts shall be effectively fitted and tightened to obtain satisfactory earth continuity. Serrated lock washers shall be used beneath the locknuts. All tails shall be phase coloured with neoprene sleeves prior to the final connections being made.

These sleeves are not to be pushed too far into the pot seal. Where PVC serving is specified, the area from which the serving is removed is to be taped from the served section back to the gland plate, including the gland, with half lapped adhesive PVC tape. A PVC shroud shall be fitted over the taped area of both sheath and gland. No through joints will be permitted.

After cutting cable all ends shall, if being left for any length of time, be temporarily re-sealed with pot seal compound. In plaster depth work all cable ends must be made prior to plastering.

When terminating at motors mounted on slide rails the cable shall be saddled to a point adjacent to the motor, where it shall be made off into a standard round conduit box, adequately supported. From a dome lid the motor shall be connected by PVC conductors and earth wire in "Kopex" flexible tubing as specified elsewhere in this Part, or alternatively with PVC AS cable and glands. Where motors are not provided with means of altering their position, they may be connected directly with the cable, formed into an unsupported loop of 150mm minimum diameter prior to the connection to minimize vibration.

Where cable emerges from the ground, or is installed in a vulnerable position, it is to be protected by hot dip galvanized channel iron sections saddled to the wall. These sections are to be 1400mm high and must not touch the cable. Where cable is to be installed through conduit sleeves, a single lap layer of PVC tape is to be applied to the cable over the length that will be enclosed by such sleeves.

All cabling is to be tested prior to being made alive. No cable is to be tested until 24 hours after fitting of pot seals. All cables and terminations are to have an insulation resistance of infinity when tested with a 500V instrument between conductors and earth.

Where failure of a cable results from the installation carried out with incorrect tools, bad workmanship or neglecting to carry out those tests specified, the whole length is to be replaced at the Contractor's expense and he will also be responsible for the cost of making good damage to the work of other trades that may result.

C1001- 22 MISCELLANEOUS ELECTRICAL CONNECTIONS

Connections shall be made to all electrical equipment as detailed elsewhere in this Specification. The following provisions shall apply in general.

Control panels supplied by others will be installed by them and will be complete with an integral main isolator. This Contract covers the connecting of the main supply and cable gland. Wiring from control panels to equipment is a part of this Contract, unless otherwise specified.

All motors shall be provided with an adjacent isolator where indicated on the drawings. This isolator is to be mounted on a suitable floor stand if it is not possible or practical to mount it on

the machine. Final conduit connections to motors are to be through flexible conduit as specified elsewhere in this Part, or alternatively with PVCAS cable.

Domestic stoves shall be connected in accordance with the recommended method of the local Supply Authority for the particular area. A 1,5m length of flexible conduit as specified elsewhere in this Part shall be allowed for the final connection between the outlets and stove. Allowance shall be made for connecting all stoves unless otherwise specified elsewhere in this Specification.

In cold rooms the light circuit shall preferably be wired in "Surfix" but if PVC insulated wire is used, this shall be in galvanized conduit directly secured to the fitting. The point of entry shall be silicon sealed. Any thermostats, fan or other connections to be made within the cold room as specified elsewhere in this Specification, are to be made using "Surfix" run along the same general route as the refrigeration pipes and sealed as above.

C1001- 23 HOT DIP GALVANISING

Where hot dip galvanising is called for, it shall conform to SANS 763, the required coating thickness being in accordance with Table 1. Unless the galvanized part is to be painted, the coating is to be passivized immediately. Where later painting is required, a suitable primer shall be applied at the galvanising works.

Before galvanising, all cutting, drilling, welding, etc., shall be complete. Bolt threads shall be suitably undercut and nut threads over tapped to ensure the correct fit after galvanising.

All galvanized parts shall be stored under cover and in stacks such that no part is resting on another and there is sufficient ventilation to prevent condensation occurring. No galvanized parts shall be stored directly on the ground but on pallets or similar protection. Any damaged parts or parts attacked by white rust will be rejected.

Any galvanized surface that is subsequently damaged shall, if the Engineer does not require replacement, be touched up in the manner specified in the Clause "Painting" elsewhere in this Part.

C1001- 24 PAINTING

Any metal work which is not galvanized or painted at Works shall be decreased using a solvent and thoroughly cleaned with a wire brush. If rust is present, this shall be removed by grinding. A red oxide self-etching primer shall be applied, followed by a white undercoat and thereafter a coat comprising a mixture of 50% undercoat and 50% finishing coat. The final coat shall comprise oil based outdoor type enamel.

All equipment that is delivered to site painted shall, after installation and as near as possible to handover, be lightly rubbed down, all damaged paintwork shall be touched up and thereafter the whole given one coat of oil based outdoor type enamel of the same colour as the original.

Where any galvanized or zinc coated surface has been damaged or cut, this shall be touched up using an organic zinc rich epoxy primer (containing min. 90% zinc) after thorough cleaning with a solvent and grinding away all rust. This is to be followed by a self-etching primer suitable for use on zinc coated surfaces and then an undercoat and two top coats as described above.

C1001- 25 LABELS AND NOTICES

The Contractor shall arrange for the labelling of all equipment, instruments, meters, relays, cables, etc., as indicated below.

Where identical items of equipment can be removed from their housings, e.g. circuit breaker carriages, plug-in relays etc., both the fixed and with draw-able portions are to be labelled identically.

All labels shall be ivorine or other back engraved white on black labels of the sizes indicated. They are to be located in purpose made holders or otherwise are to be screwed or riveted into position. "Dymo" tape or similar labels will not be accepted nor will labels which are glued in position only.

Labels on poles shall comprise an aluminium plate with the designated number. These labels shall be nailed to the pole 1,5m above ground level. Nails shall be electro-galvanized clout nails.

Prior to any equipment being labelled, the Contractor shall request the Engineer to provide a

complete labelling schedule for all items of equipment. Under no circumstances is equipment to be labelled in accordance with the tender drawings since any description thereon is for identification purposes during construction only and is unlikely to apply to the completed Works.

The following list indicates the general labelling requirements but does not limit the extent of labelling required, which shall encompass the full extent of the equipment supplied, or in the case of existing equipment, any such which is affected by this Contract.

50mm high lettering:
Substation and mini-sub designation.
Outdoor switchgear designation.
Transformer designation.
Distribution kiosk and fused feeder panel designation.

20mm high lettering:
Main or sub-main board designation.
Control panel designation.
Indoor switchgear designation.

10mm high lettering:

Individual switches on switchgear.
Cubicles.
Sub-distribution board designation.
Poles for OH lines.

5mm high lettering:
Minisub feeder breakers and isolators.
Distribution kiosk feeder breakers and isolators.
General distribution switchgear.
Meters, instruments and relays.
Multiplying factors.

3mm high lettering:
This size shall be used to designate the conductor size and number of cores of each cable installed under this Contract. In addition, all feeder cables shall be labelled to state from whence they are fed.
All switchboards shall be provided with a label in both official languages reading "In case of leakage or accidental contact, put off main switch immediately".

All substations, mini-subs, kiosks, transformer rooms and switch rooms shall be provided with notices as required by the Occupational Health and Safety Act. All doors to such locations shall be fitted with the appropriate notices. In the case of mini-subs, these shall comprise at least two 190mm x 190mm design WW7 in accordance with SANS 1186 externally and $H^{v}/_{s}$ and $L^{v}/_{s}$ respectively on the inside of all doors, while kiosk doors shall meet the LV requirements only. For all other substations, enclosures etc.: "Kontra" Safety Signs as supplied by Mine Safety Appliances or approved equivalent are to be provided, Nos.KM115 and K0711 being used externally and KM112, K0706 and K0710 internally.

Where more than one similar item of equipment is fed from the same board or control panel, the item itself shall be labelled, this being fixed in a permanent position, i.e. not attached to motors, pumps etc., but to bases or adjacent thereto. The lettering shall be 50mm high.

C1001- 26 DISMANTLING

Where dismantling of existing parts of the installation is called for, all components including wire, insulators, poles, cable, switchgear, transformers, etc., are to be removed and handed to the appropriate Authority. Under no circumstances is any material or equipment to be taken over by the Contractor. In the case of reclamation of conductor, this is to be done after removing the binding wires on intermediate insulators so that full strain lengths are recovered. All such material is to be neatly coiled, packed, etc., as appropriate.

Extreme care is to be taken in dismantling all such equipment, since it will be re-used by the Employer. If, in the opinion of the Engineer, unnecessary damage is done, the cost of replacing such equipment will be debited to the Contractor's account.

A receipt detailing all equipment and materials delivered in accordance with the above must be

obtained and a copy submitted to the Engineer.

C1001- 27 INSPECTION, TESTING AND COMMISSIONING

The Engineer shall have access at all reasonable times to such parts of the Works or the Contractor's premises or the premises of the manufacturer of component parts; as may be necessary for the purpose of inspecting, examining and testing the materials, workmanship and performance of any plant or equipment specified for the Works.

The Contractor shall ensure that all equipment such as switchboards, transformers, mini-subs, kiosks, etc., are inspected and tested at the manufacturer's premises, in the presence of the Engineer.

All wiring is to be subjected to a test voltage of 2kV for one minute without insulation failure. A Megger test is to be applied with a 500v instrument immediately thereafter to prove the insulation resistance better than 20 mega ohms. All meters are to be injection tested to ensure correct operation. All control circuits including motor overloads, relays, etc., are to be operated to ensure the correct functioning of the entire control system.

All equipment necessary to enable the tests to be carried out shall be provided and shall include, inter alia:

Phase rotation meter	500A primary injection test set
Avometer	25A secondary injection test set
500V	2kV DC test set

After completion of manufacture, the following test certificates, signed by the Contractor and the firm executing the tests, shall be provided in duplicate:

Transformer test certificate to SANS.

Test certificate stating that all LV switchboards and control boards have been inspected and their wiring subjected to 2000V DC for 1 minute.

Test certificate stating that all HV switchboards have been inspected and their internal wiring subjected to 2000V DC for 1 minute and HV components to the appropriate voltage as laid down in the applicable SANS or BS Specification.

Any other test certificate for routine tests as laid down in relevant SANS or BS Specification or Codes of Practice applicable to the item in question.

Test certificate in respect of any special tests called for elsewhere herein.

The Contractor shall arrange for any Statutory Government and/or Supply Authority inspection of the installation prior to testing and final commissioning by the Engineer.

On completion of the entire installation or any particular section thereof, as may be decided by the Engineer, commissioning shall be carried out by the Contractor, and any tests the Engineer deems necessary shall be conducted. The Contractor shall supply all equipment necessary for the testing and commissioning procedures.

Prior to commissioning of any transformer, the oil shall be tested and, if necessary, shall be dried out by the Contractor. Should this be necessary, the Engineer must be advised that it is suspected the transformer is damp before any work is undertaken.

Transformer wheels shall be solidly chocked. No transformer shall be commissioned without the consent of the Engineer.

During commissioning, all tap change switches are to be correctly set and locked. All wedges and packing in switches and relays shall be removed and each switch and each relay circuit operated.

All protection and small wiring shall be tested with a 500V Megger and injection currents passed through the secondaries of every circuit to check the proper operation of relays, instruments and protection.

The Contractor shall supply all equipment necessary for the testing and commissioning procedures. The test equipment required at Site shall include, inter alia:

Phase rotation meter

Suitable cable test set

11 000V phasing sticks

500V Megger

Signature of te5 000V Megger

Avometer

Earth resistance test set

25A secondary injection test set

After completion of the commissioning tests the Contractor shall provide duplicate test certificates relating to cable tests, current injection tests of all instruments, meters and relays and results of earth mat tests.

The Contractor shall give the Engineer at least 14 days' notice of the date of any testing or commissioning so that he may be present if he so wishes. Where the Engineer does not himself, or through his representative, attend to witness the tests, then the Contractor may proceed with the test, duly forwarding to the Engineer certified copies of the results obtained. In such cases, the test shall be deemed to have been made in the presence of the Engineer.

In the event of the equipment or installation not passing the tests, the Employer shall be at liberty to deduct from the Contract Price, all reasonable expense incurred by him or by the Engineer in repeating the tests.

C1001- 28 COMPLETION OF WORKS

Before completion of the Contract any damage which may have been done in the process of the installation shall be repaired and made good, trench or excavation work shall be left in a clean and tidy state and all accumulated debris shall be removed from the Site by the Contractor, to the satisfaction of the Employer and Engineer.

All defects found are to be rectified within one month of written notice of such defects. A penultimate certificate reducing the retention amount to that stated elsewhere in this Specification will only be issued upon submission of As Built Drawings and Operating Manuals as called for elsewhere herein, after completion of all notified defects, and once all test certificates called for in the Clause "Inspection, Testing and Commissioning" elsewhere in this Part have been submitted and accepted by the Engineer.

An appropriate Certificate shall acknowledge practical completion of the Works and the commencement of the period during which the Contractor will be responsible for any defects that may become apparent, and of Maintenance as detailed under the Clause "Maintenance" in Section A of this Part, where applicable.

The Contract will not be deemed to be finally complete until the Engineer's final payment certificate is issued

STELLENBOSCH
STELLENBOSCH • PNIEL • FRANSCHHOEK
MUNISIPALITEIT • UMASIPALA • MUNICIPALITY

C1002 ELECTRICAL TECHNICAL SPECIFICATIONS

(To be read in Conjunction with the Electrical Standard Specification)

NOTE 1 Contractors are advised that this tender is based on the Electrical Standard Specifications which impose very specific and rigid conditions for the technical and quality requirements of the equipment, materials, installation, testing, commissioning and maintenance of all aspects of this tender.

NOTE 2 Contractors must acquaint themselves fully with all requirements of the Standard Specifications. Where prices are to be obtained from suppliers of equipment, such as switchboards, Contractors must ensure that their suppliers are also fully conversant with the Electrical Standard Specifications.

NOTE 3 The Engineer will rigidly enforce each and every requirement of the Electrical Standard Specifications.

NOTE 4 Unless otherwise agreed by the Engineer, all equipment shall be of South African manufacture.

NOTE 5 Contractors are advised that only the highest standard of workmanship will be accepted and that all materials supplied must be strictly in accordance with this tender document. If workmanship and/or materials are not suitable, the Engineer will request that the work is repeated or the materials returned until a satisfactory standard is achieved. No additional payment will be made in respect of any remedial works.

NOTE 6 The submission of all commencement, compliance and completion forms including any test certificates which may be required will remain the responsibility of the Contractor. Copies to be submitted to the Engineers.

C1002-1. REGULATIONS, FACTORIES ACT AND BY-LAWS

The entire contract shall be carried out in accordance with the latest revision and amendments of the following:

- The Standard Regulations for the Wiring of Premises as issued by the South African Bureau of Standards (SANS 10142-1);
- The Occupational Health Safety Act No. 85 of 1993;
- N.O.S.A. Safety Guidelines;
- The Local Fire Office Regulations;
- The Municipal by-laws and any special requirements of the local Supply Authorities of the area or district concerned;
- The applicable IEC Specifications or the BS Specifications where no SANS or IEC Specifications exist;
- The National Building Regulations;
- Post Office Regulations;
- Earthing design and installations, SANS 10199;
- The protection of structures against lightning, SANS 10313;
- Interior lighting (artificial) SANS 10114 Part 1;
- Emergency lighting SANS 10114 Part 2; and
- This specification.

No claims for extras in respect of failure by the Contractor to comply with any of the above regulations will be considered.

Where conflict exists between any of the above regulations and the specifications, the said conflict must be referred to the Engineer in writing for his ruling.

In addition to the above Contractors are advised that only the highest standard of workmanship will be accepted and that all materials supplied must be strictly in accordance with this specification. If workmanship and/or materials are not suitable, the Engineer will request that the work is repeated or the materials returned until a satisfactory standard is achieved. No additional payment will be made in respect of any remedial works.

C1002-2. SCOPE OF WORK

The scope of work for this project covers the manufacture, supply, delivery, installation, testing and commissioning of the electrical installation as described hereunder.

The electrical installation Scope of Work shall include the following

- Supply, delivery, installation and commissioning of the street lighting installation distribution.
- Supply, delivery, installation and commissioning of the Electrical switch-gear as specified in the Bills of Quantities.
- Construction of new masonry composite sub-station building.

C1002-3. EXCLUSIONS

- Eskom Meter Panel;
- Electric fence;
- Supply and installation of pump-motor sets, mechanical equipment, cranes, piping, valves; and
- Civil, structural and building work

C1002-4. SECURITY OF MATERIALS AND EQUIPMENT

Unless expressly allowed for in the contract sum, the Contractor shall in connection with the works, provide and maintain, at his own cost, all lights, guards, barriers, fencing and watching when and where necessary or as required by the Engineer or by any competent statutory or other authority for the protection of the works or for the safety and convenience of the public.

C1002-5. STORAGE

The Contractor must provide adequate and secure storage, to the satisfaction of the Engineer, for all materials. All material must, in addition be stored or stacked in positions that will not interfere with other work in progress in the area.

C1002-6. CONTRACT WORK

This part of the specification has preference to any other part of the specification.

The Contractor shall have, before submitting their tenders, acquainted themselves with the local conditions, accessibility of the sites, soil, conditions, availability of labour and labour conditions, transport, offloading, custom and duties, storage and custody conditions for materials and equipment necessary for the completion of the total contract. No claim based on ignorance in this regard shall be considered.

Permission must be obtained from the Engineer before the Contractor visits the site, or the Contractor establishes himself on the site.

C1002-7. INTERCHANGEABILITY OF EQUIPMENT

Equipment to be supplied under this contract must be identical in all respects and it shall be possible to interchange such equipment should it become necessary.

All auxiliary equipment shall also be identical, including such items as contactor's, relays, fuses, method of wiring, numbering of wires, indication lamps, push buttons and instruments.

All material and equipment must be suitable for 400/230V supply voltage, 50 Hz supply frequency and must be approved by the Engineer. In addition all equipment shall be designed, manufactured and tested in accordance with the relevant South African Bureau of Standards Specification or otherwise the relevant IEC or British Standard Specification. All products and equipment used as part of a fixed electrical installation shall bear the " SANS 10142-1

authorization mark for safety" and the necessary precautions shall be taken against corrosion, i.e. exposed metal shall be 304L stainless steel. **All electrical equipment used in the wet well shall be compatible with methane and hydrogen sulphide gases and shall be IP68.** All other areas shall have equipment rated IP65 minimum.

C1002-8. BOLTS, NUTS, WASHERS, BRACKETS AND MOUNTING ACCESSORIES

All bolts, nuts washers, fixing and mounting accessories shall be manufactured from stainless steel. Should accessories manufactured from mild steel or any other corrosive material be used on site, the Engineer shall instruct the Contractor to remove such accessories and replace them at the Contractors expense.

C1002-9. SPECIFICATION AND DRAWINGS

The specification and drawings generally show the character and extent of the proposed work, and shall not be held as showing every minute detail of the work to be executed.

Contractors must ensure that their copy of the specification is complete and that all drawings as listed have been received.

C1002-1. Contract Drawings

The layout and extent of the electrical installation are shown on the drawings which form part of this document. The positions of all power, light and switch outlets or routes which may be affected by other services, must be confirmed by the Contractor with the Engineer before placing such outlets.

The Contractor must request a complete set of Architectural/Structural/Mechanical and any other Services drawing from the Main Contractor for his information. Dimensions shown on the latest revision of Architectural/Structural drawings must be used by the Contractor for setting out purposes. No claims regarding revisions in Architectural/Structural which are not indicated on the Electrical Drawings will be accepted.

C1002-10. WORK SEQUENCE

The sequence in which the work must be carried out, must be established in consultation with the Civil and Mechanical Contractors, Engineer and any other Contractors on site.

C1002-11. SUPERVISION

The work shall at all times, for the duration of the contract be carried out under the supervision of a skilled and competent representative of the Contractor who a Licenced Installation Electrician and who will be able and authorised to receive and carry out instructions on behalf of the Contractor. A sufficient number of workmen shall be employed at all times to ensure satisfactory progress of the work.

C1002-12. SERVICE CONDITIONS

All plant shall be designed for the climatic conditions appertaining to the service.

C1002-13. EARLY DELIVERY OF BUILT-IN ITEMS.

As soon as the contract has been awarded, the Contractor must establish the full requirements relating to all built-in items, and arrange for their earliest manufacture and delivery to site to suit the programme.

C1002-14. DAMAGE TO BUILDINGS

The Contractor will be held responsible at all time for all damage to the buildings and plant due to negligence of any of his workmen or that of his sub-Contractors. The Contractor at his cost shall repair any damage arising out of such negligence.

C1002-15. PROVISION OF BUILDING WORKS FOR ELECTRICAL PLANT

The Contractor must supply full details of his requirements regarding work to be carried out by the Civil Contractor, including dimensions and positions of all openings, ducts etc., in walls and floors, and full particulars of all holding down bolts, cable holes for motors, etc. The Contractor shall supply all retaining devices like studs and bolts. Where a defect is found this shall be reported to the Engineer timeously so that corrective action can be taken. Under no circumstances will delays and consequential cost be entertained due to the failure to ensure that the mountings are correct.

C1002-16. BALANCING OF LOAD

The Contractor is required to balance the load as equally as possible over the multiphase supply.

C1002-17. POWER SUPPLY

The power supply to the project has been applied for by the Engineer.

The supply, installation and commissioning of the power supply will be undertaken by the Electrical Contractor. All costs for the power supply shall be borne by the Client.

The Electrical Contractor shall be responsible for the supply, installation and connection of all the specified low-voltage cables from the supply point to the MCC panel.

The Contractor shall liase with Stellenbosch Municipality to ensure that all the necessary forms are complete to ensure that the power supply is available prior to the commissioning of the Works.

The low voltage system is a 400 volt three phase, four wire, 50 Hz system with an fault level of 25kA.

C1002-2. Cable trenches

Tenderers must base their tariffs for cable trenches in soil, soft rock and hard rock on the quantities given in the Bill of Quantities. The actual quantities shall be determined on site.

Adjustments to the Contract Price shall be calculated using the tariffs in the Bills of Quantities, after completion of the installation.

SOIL: Shall mean hand pickable soil and includes loose gravel, clay, backfilled soil, loose or soft shale, loose literati and rocks less than 75 mm dia.

SOFT ROCK: Shall mean rock which is hand pickable including hard shale, dense literati and rocks exceeding 75 mm in dia. to 0.03 cubic metres volume.

HARD ROCK: Shall mean granite, quartz sandstone, slate and stone of similar hardness as well as rocks exceeding 0.03 cubic metre volume.

No guarantee can be given that explosives will not be necessary for excavations. However, should explosives be necessary and the Contractor receive permission to use explosives, the Electrical Contractor shall remain responsible for all work done with the explosives and shall comply with all conditions, regulations, requirements etc. imposed by the governing bodies.

Mechanical excavators may be used for trenching operations provided that they are not used in close proximity to other plant, services or other installations likely to be damaged by the use of such machinery. The use of mechanical excavators shall be subject to the approval of the Engineer.

Should excavations be done in close proximity of existing services extreme care must be taken. Only labourers with experience of these conditions may be utilised.

The bottom and sides of trenches must be of smooth contour, and shall have no sharp dips or rises which may cause tensile forces in the cable during backfilling.

Backfilling of trenches may commence after the trenches have been approved and shall be compacted in layers of 150 mm. Sufficient allowance must be made for final settlement. For the first layer of 150 mm, sifted soil of which 75 mm must be below and 75 mm must be above the cable must be used. Where no suitable soil is available on site, the Contractor shall import fill from elsewhere and make all the necessary arrangements to do so.

The Contractor shall be responsible for taking the necessary precautions where excavations may be dangerous. Refer to the Machinery and Occupational Safety Act 1983, Reg. 13 of the

General Safety Regulations. The Contractor must ensure that all buildings, sewers, etc., are protected against caving.

The cable trenches shall be excavated to be 300 mm wide for one to three cables and the width shall be increased where more than three cables are laid together so that the cables may be placed at least two cable diameters apart throughout the run.

Payment will be made on a cubic excavation rate based on the basis of the given maximum dimensions or the actual dimensions, whichever is the lesser. The only exception shall be in cases of additional excavations caused by obstructions such as water pipes, drains, large rocks, etc., in which case the length of the additional excavation must be agreed upon on site by the Engineer.

C1002-3. Joints

Joints in cable runs shall not be allowed unless specified or authorised in writing, by the Engineer. Where cable joints are to be made, a joint hole must be excavated of sufficient size to enable the cable jointer to work efficiently and unimpeded.

Each cable end must be left in a loop of 0.9 m to prevent any tension on the joint.

During backfilling the section supporting the joint must be compacted to the extent that no movement will take place after the trenches have been backfilled.

All joints in underground cables and terminations shall be made either by means of compound filled boxes according to the best-established practice by competent cable jointers using first class materials or by means of approved epoxy-resin pressure type jointing kits such as "Scotchcast". Epoxy resin joints must be made entirely in accordance with the manufacturer's instructions and with materials stipulated in such instructions. Low voltage PVC cables are to be made off with sealing glands and materials designed for this purpose which must be of an approved make.

Where cables are cut and not immediately made off, the ends are to be sealed without delay.

C1002-4. Cable laying

Cables must be removed from the drums in such a manner that the cable is not subjected to mechanical damage, twisting or tension exceeding that stipulated by the cable manufacturer.

The laying of cables shall not commence until the trenches have been inspected and approved. The cables must be adequately supported at intervals during the whole operation. Particular care must be exercised where it is necessary to draw cables through pipes and ducts to avoid abrasion, elongation or distortion of any kind. The ends of such pipes and ducts shall be sealed to approval after drawing in of the cables.

C1002-5. Sleeves

All sleeves indicated on the drawings will be supplied and installed by the Electrical Contractor. It shall be the responsibility of the Electrical Contractor to liaise with the builder to ensure that all the sleeves are correctly installed.

Before backfilling the ends of all sleeves must be sealed with paper and a weak cement mixture.

C1002-6. Cable markers

Cable markers must be provided on all cable runs at 50 m intervals on straight runs and at all bends. The position of cable markers must be confirmed on site.

Cable markers must consist of 150 mm x 150 mm x 300 mm high concrete blocks with aluminium or other rust-free metal plates marked with arrows to indicate the route.

C1002-18. EARTHING

The entire installation shall be properly and effectively earthed as prescribed in the Standard Regulations for the Wiring of Premises SANS 10142-1 and to the requirements of the relevant supply authority.

This portion of the work must be undertaken by Specialists.

The earthing mat consist of a completely continuous earth loop of 70mm² bare single core stranded copper conductors (B.E.C.C.) with stainless steel earth rods.

The CONTRACTOR, however, will be responsible for the bonding of installed equipment, e.g strutural steelwork, handrails, cat ladders, tanks, vessels, mechanical equipment, pumps, fans, electrical equipment, power consumers & cable supports.

Please note that single earth conductors will be supported via stainless steel angle iron. The main cable support system as provided by the CONTRACTOR may also be used to support these conductors in the most economical route.

Under no circumstances shall any connection points, bolts, screws, etc., used for earthing be utilised for any other purpose.

It will be the responsibility of the CONTRACTOR to supply and fit earth terminals or clamps on equipment and materials that must be earthed where these are not provided. Unless earth conductors are connected to proper terminals, the end shall be tinned and lugged. Earth conductors for individual circuits branching from the ring main shall be connected to the common earth conductor with “Burndy” clamps or soldered. The common earth shall not be broken.

Earth rods shall comprise of one piece, 16mm nominal diameter, 1,5m long stainless-steel Rod.

Conductor clamps shall be made using a strong cast bronze body to provide a high-pressure contact between the earth conductors and earth rods.

The clamps shall be provided with a non-ferrous setscrew.

All rods will be threaded at either end so that extensions can be added to where deep driven installations are required. All connections will be taped or waterproofed to ensure that corrosion does not affect the joint during the life of the installation.

The rods shall be supplied complete with a driving bolt for protecting the ends of the coupling whilst being driven into the ground.

The top of the rods, after installation, shall be 400mm below final ground level.

C1002-19. TESTING AND COMMISSIONING

The Contractor is to ensure that, for the purposes of commissioning the complete installation, he has in his possession all the necessary test equipment as well as communication equipment such as portable radio transceivers.

The Contractor must supply the Engineer with copies of valid calibration certificates for all testing and measuring equipment before using this equipment.

Commissioning of the whole installation shall not commence until all work which is essential for safe operation has been completed.

First, the electrical equipment and circuitry shall be checked and tested in each Motor Starter and shall be rendered “healthy” and fully operational before any other part of the installation is commissioned.

The settings of all protective, instrument and timing devices are to be correctly based on the manufacturer’s characteristic curves.

The operation of all equipment and rotation checks of motors shall be carried out on the “manual” sequence first prior to attempting “automatic” sequence control.

Commissioning shall follow the electrical testing procedures, prior to start-up of the equipment.

The start-up of each system or plant shall be done in the presence of the authorised representatives of the machine suppliers, the Mechanical Contractors, the Contractor and the Engineer, unless otherwise arranged by the Engineer.

The Contractor shall test the entire installation in terms of Regulation 7 of the Electrical Installation Regulations 1992 of the Occupational Health and Safety Act 1993 and shall issue a Certificate of Compliance on the official form, Annexure 1, obtainable from the Electrical Contracting Board of South Africa. All tests shall be carried out in conjunction with and to the satisfaction of the supply Authority and in the presence of the Engineer. The Contractor shall make all arrangements for testing and inspection, the costs thereof being included in the Tender Price.

The Engineer will provide the Contractor with check sheets, which must be used and completed in full. These check sheets do not relieve the Contractor from carrying out his own checks and

tests. The responsibility of the installation meeting specification and statutory requirements remain with the Contractor.

The Contractor shall ensure that the installation is completed in every respect and that there are no major defects prior to notifying the Engineer (in writing) for the first delivery inspection. The certificates of compliance shall be issued to the Engineer at the first delivery inspection.

The Engineer will accept zero minor defects during the final inspection. Should any defects as listed during the first delivery inspection be found not to have been corrected then the Engineer will terminate that inspection and request that an additional final inspection be arranged by the Contractor.

Testing shall consist of pressure tests (where applicable), primary and secondary injection, relay tests and any tests which the Engineer deem relevant to ensure compliance with specification and correct functionality.

The Contractor shall be responsible for arranging all the tests as specified, at the appropriate time.

The electrical installation shall be tested in accordance with the Standard Regulations for the Wiring of Premises and any applicable by-laws of Local Authorities.

The Engineer may perform similar tests at any time and the Contractor shall render all assistance and shall provide all tools and instruments, which may be required for such tests.

The Contractor shall replace any portion of the installation if it does not meet with the requirements of the Regulations of this specification, as may be found by test or inspection. Such replacement shall be done at his cost.

All 230V socket outlets shall be tested for polarity and the sensitivity of the earth leakage protection equipment shall be tested by means of an approved instrument.

“Danger “notices shall be displayed at remote ends of cables under test.

The Contractor shall advise the Engineer in writing of all results and furnish copies of all certificates.

The Contractor shall provide all the necessary instruments for the proper testing of the complete installation. If there is a reason to doubt the accuracy of such instruments, the Contractor shall take the necessary action to prove their accuracy.

TESTING	MINIMUM REQUIREMENTS
Insulation resistance	Whole installations: better that 1 Meg Ohms
LT Installation	Each sub-distribution section: better than 5 Meg Ohms. Each un-terminated cable: better than 5 Meg Ohms omitted
Earth Leakage on socket outlets	Better than 30 mA
Maximum resistance of earth continuity conductor	As per table 8.1 of SANS 10142-1
Earth electrode resistance	1 Ohm or better

C1002-20. MANUALS AND DRAWINGS

Three (3) copies of the operating and maintenance manuals shall be provided on delivery of the plant and equipment. These shall come in the form of plastic covered ring files with the following information indelibly printed on their covers.

(Name, address, telephone and fax number of Contractor).

Each page, pamphlet, booklet, diagram, drawing etc. shall be separately bound into the manuals in a clear plastic pocket. Each pocket shall be numbered and indexed.

The first page of each set of manuals shall be an index which shall include a list of the numbers and descriptions of all drawings and pamphlets included in the set and also a list of the

Engineer's drawings relating to the relevant sections of the Contract.

The instructions shall include the following:

- A list of spares, tools and testing equipment supplied under the Contract;
- A list of spare parts and testing equipment which are not supplied under the Contract but which may be required for future major overhaul and/or testing of electrical plant and equipment;
- Suppliers' names, addresses, telephone numbers, fax numbers and costs must be listed;
- List of "Name Plate Data" giving full particulars of serial numbers and other descriptive data pertaining to the plant and equipment installed;
- Routine tests which the Contractor/Supplier(s) would suggest be carried out.

All information mentioned above shall be cross-referenced to the drawings.

Additionally, the manuals shall provide the following electrical information which shall also be cross-referenced to the drawings:

- Dimensioned Equipment layout plans;
- Power single line diagrams;
- Equipment and component specification sheets;
- Control Wiring diagrams;
- Narrative description of the control circuit operation;
- Maintenance instructions with recommended preventative maintenance programme;
- Fault finding analysis;
- Operating instruction;
- Adjustment and calibration instructions if applicable;
- Priced spare parts list with names of local suppliers and list of spares recommended to be kept in stock; and
- Further one (1) set of drawings relevant to a particular motor control centre shall be placed in a weatherproof glass fibre enclosure adjacent to the motor control centre.

This enclosure shall be electric orange in colour, be sized to accommodate drawings folded to A4 format, be labelled "Electrical Drawings" and shall have provision for fitting a standard padlock.

REQUIREMENTS SPECIFIC TO MINIATURE SUBSTATIONS

1.1 General Construction

1.1.1 The miniature substations shall be suitable for outdoor use and shall be divided into three compartments, namely:
a) MV switch compartment
b) Transformer compartment
c) LV compartment

1.1.2 Miniature Substation Type A:

1.1.3 The design and construction of the Dyn11 Type A miniature substations shall be generally in accordance with the arrangement for a Type A unitary design substation as specified in 1029, and shall comply with SANS 1029 where applicable. The miniature substations shall have a transverse mounted transformer and shall be dimensioned to fit on a Type AS concrete plinth. The width of the substation is to be kept to a minimum. The width of the LV compartment shall be approximately 900 mm.

1.1.4 The front side of the Type A miniature substation shall be deemed to be the side on the long axis that faces the road. Type A miniature substations shall have the LV compartment on the left hand side of the transformer (facing in the direction of the long axis) and the MV (RMU) compartment on the right hand side of the transformer when the miniature substation is viewed from the front side. The tap changer compartment and MV (RMU) compartment doors shall open to the front side and the LV compartment door

shall be hinged such that it opens towards the rear of the miniature substation and provide unobstructed egress towards the front.

1.1.5 The miniature substations shall be manufactured from materials as detailed below with the following minimum thicknesses:

Channel Underbase	-	6 mm hot dip galvanised mild steel
Transformer Bottom	-	4.5 mm 3CR12 stainless steel
Transformer Tank	-	4.5 mm 3CR12 stainless steel
Tank Cover	-	4.5 mm 3CR12 stainless steel
Radiator Tubes	-	1,6 mm hot dip galvanised mild steel
Walls and Roof	-	2 mm 3CR12 stainless steel
Doors	-	3 mm 3CR12 stainless steel

1.1.6 Stainless steel radiator tubes will be accepted, and are preferred provided that such designs have been completed and type tested, are of equivalent mechanical performance and are cost effective.

1.1.7 All component materials shall be identified on the miniature substation rating plate in an approved manner.

1.2 Miniature Substation Roofing and Walls

1.2.1 The roof and walls shall be of a single unitary construction. The roof shall have a distinct double slope to shed water.

1.2.2 The roof shall be secured in place in such a way as to ensure that the internal arc rating of the miniature substation is maintained at all times during service. Where possible the miniature substation shall be transported with the roof fitted and secured, and removal on site for inspections, maintenance or other routine activities shall not be necessary.

1.2.3 Where removal of the miniature substation roof cannot be avoided during lifting and installation of the miniature substation on site the manufacturer shall ensure that the design provisions facilitate the easy and reliable refitting of the roof by field staff to the required standard to ensure that the equipment performs to the specified IAC classification in the event of an internal fault. The Tenderer shall provide a thorough Work Method Statement document detailing the step-by-step requirements for refitting the roof, including fastener details and positions, torque settings and recommended tests to verify correct re-assembly.

1.2.4 Lifting lugs shall be provided and shall be positioned so that the entire miniature substation can be safely slung and transported without distortion of the miniature substation enclosure or frame and preferably without the necessity of removing the roof

1.2.5 The internal equipment shall be protected against the ingress of water and shall be vermin proof.

1.2.6 Ventilation openings shall be provided in the roof, to prevent condensation.

1.2.7 The overhanging edge of the roof shall be folded back towards the housing on all sides.

1.3 Miniature Substation Doors

1.3.1 All openings on the miniature substation for access shall be equipped with lockable hinged doors. The doors shall be equipped with hinges that shall be internally mounted.

1.3.2 Doors shall be indelibly marked, in red, MV/S and LV/S as applicable, on the insides.

1.3.3 A rigid document holder suitable for A4 sized documentation shall be provided and fitted to the inside of the right hand side MV compartment door.

1.4 Miniature Substation Base Construction

1.4.1 The miniature substation housing shall be erected on a U-section steel frame with measurements of not less than 75 mm x 70 mm. The U-section shall be hot dip galvanised and painted with two coats black bitumen paint. It shall be rigid, robust and completely

self-supporting.

1.4.2 Facilities shall be provided for bolting of the miniature substation underbase to a concrete plinth utilising holding-down set screws as necessary in order to provide for a safe installation and to comply with the miniature substation internal arc classification.

1.4.3 Flanges that are provided for the fitting of holding-down set screws shall be of a minimum of 5 mm thick steel or alternatively be reinforced to prevent bending during transportation, handling and installation.

1.5 Earthing

1.5.1 Earth terminals, (M12 x 50 mm minimum) shall be welded to the transformer tank and shall be accessible from the MV and LV compartments.

1.5.2 The ring main unit and miniature substation base shall be securely bonded to these earth terminals in the MV compartment.

1.5.3 Copper bonding conductors shall have a minimum cross sectional area of 70 mm².

1.5.4 Two stainless steel nuts and washers shall be provided on each earth terminal.

1.5.5 Each compartment shall be provided with an earthing terminal that complies with the relevant requirements of SANS 1029.

1.5.6 All earthing conductors shall be painted to assist with the prevention of vandalism.

1.6 MV Shunt Tripping

1.6.1 The miniature substation transformer shall be fitted with a top-oil thermoelectric temperature sensing element, a thermostat and auxiliary wiring and fittings necessary for shunt tripping of the RMU switch-fuse disconnector in the event of a transformer overtemperature.

1.6.2 The thermostat shall be factory set to shunt trip the RMU when the transformer top-oil temperature exceeds 90°C.

1.6.3 The thermostat shall be housed in an enclosure fitted with a transparent front cover in order to view the temperature setting of the thermostat. The enclosure shall be sealed with a stainless steel wire and crimped tinned copper ferrule to prevent changes to the thermostat set point.

1.6.4 The shunt tripping installation shall provide over-temperature trip indication to indicate when the thermostat has operated and issued an over-temperature trip signal.

1.6.5 The over-temperature trip indication shall take the form of a manually resettable latching mechanical flag, which shall either be an integral feature of the thermostat or shall be achieved using a suitable auxiliary relay. The flag shall be clearly labelled as specified, and shall be clearly visible when the LV compartment door is open.

1.6.6 In the event that the trip indication is achieved utilising an auxiliary relay, such relay shall be housed adjacent to the thermostat.

1.6.7 The shunt trip facility shall be supplied from the transformer LV busbars and shall be fitted with a suitably rated HRC fuse-link and a neutral link.

1.6.8 The thermostat and over-temperature trip indication shall be housed in the transformer LV compartment unless otherwise approved by the Engineer.

1.6.9 The positioning of the thermostat and over-temperature trip indication equipment shall be such that it complies with all specified electrical clearances and in addition does not obstruct access for installation, maintenance or operation of other equipment in the LV compartment. In the case of Type A miniature substations the location of the thermostat and over-temperature trip indication equipment shall be best positioned to view and maintain.

1.7 MV Compartment

1.7.1 The compartment shall contain a ring main unit as specified.

1.7.2 MV bushings on the transformer shall be Type A bushings in accordance with EN 50180,

and shall comply with the requirements of SANS 60137.

1.7.3 The bushings shall be tested in accordance with the requirements of SANS 60137, including routine partial discharge testing.

1.7.4 The surface of the bushings shall be smooth and free from any blemishes, patches or fillings.

1.7.5 The bushings shall be made from insulating material to the approval of the Engineer. DMC bushings are not acceptable.

1.7.6 All dimensions, clearances and creepage paths for the transformer MV bushings shall comply with the requirements of SANS 876 for 12 kV Type 1 unshrouded cable terminations.

1.7.7 The connections between the ring main unit and the transformer shall be made directly by means of single core 35 mm² copper conductor screened XLPE insulated 11 kV trailing cables, which should be as short as possible. The use of unscreened cable is not acceptable.

1.7.8 The termination of the single core screened 11 kV trailing cables shall be to approval. The screening shall be earthed at the RMU end only.

1.7.9 The terminations shall be appropriate for the screened single core trailing cable, shall provide appropriate proven stress relief and shall have no sharp projections.

1.7.10 The termination of the trailing cables on the Type A bushings of the transformer shall be shrouded with Raychem Type RCAB, or equivalent to approval, push-on unscreened insulated bushing boots, rated at 17,5 kV and 95 kV BIL. These insulating boots shall be installed in accordance with the manufacturer's Installation Instructions.

1.7.11 The termination of the trailing cables on the Type A bushings of the ring main unit switchfuse combination tee-off shall be fitted with Raychem Type RSTI screened separable connectors (SSCs), or equivalent to approval, rated at 95 kV BIL. These SSCs shall be installed in accordance with the manufacturer's Installation Instructions.

1.7.12 Phase colour indication, RWB (Dyn11) or BWR (Dyn7), shall be positioned above the mini substation transformer MV bushings.

1.7.13 Approved removable barriers and shrouding shall be installed to prevent access by the operator to the MV connections.

1.8 Transformer Compartment

1.8.1 The transformer compartment of each miniature substation shall contain a sealed distribution transformer complying with the requirements of SANS 780 and this specification.

1.9 Tap Changer Compartment and Door

1.9.1 The tap changer compartment and door for miniature substations with externally mounted tap changers shall be fabricated from 3CR12 stainless steel of minimum thickness 3 mm.

1.9.2 The tap changer box shall be fitted with recessed lockable door with concealed hinges or a cover that provides an appropriate level of vandalism resistance. Locking facilities shall be suitable for padlocks or shall be fitted with integral locks keyed to the Employer's standardised locking hierarchy, and shall be to the approval of the Engineer. Padlocks shall be protected against vandalism.

1.9.3 The locking facilities shall be backed up by an auxiliary Allen bolt based securing system.

1.10 LV Compartment - Type A Miniature substations

1.10.1 Type A Miniature substations - Switch Box and Fittings

1.10.1.1 A switch compartment shall be fitted to each Type A miniature substation on the LV side. The LV switch compartment shall consist of a single module with a width of approximately 900 mm. The switch compartment shall be equipped with phase

busbars, neutral bar, earth bar, thermometer pocket, thermostat, over-temperature trip indication, ammeters and other fittings as detailed.

1.10.1.2 Each miniature substation shall be provided with three combined instantaneous indicating and 15 minute maximum demand flush mounted 96 mm (square) ammeters (one per phase), complete with single ratio current transformers.

1.10.1.3 The mounting of the current transformers shall not encroach on the minimum clearance required in terms of SANS 60439-1.

1.10.1.4 An approved 13 A square pin switched socket outlet (SSO) and a pair of 15 A terminals protected by type "NS" HRC 20 A and 4 A fuse links, respectively, shall be provided in each LV switch compartment.

1.10.1.5 The "NS" HRC 4 A fused link shall be used as the connection to supply the resetting voltage for the earth fault indicator equipment.

1.10.1.6 The supply to the fuse links for the SSO, 15A terminals and shunt tripping installation shall be by means of approved insulated copper conductors securely supported below busbar level.

1.10.1.7 Means shall be provided for carrying vermin proof earth fault indicator leads from the MV compartment to the LV compartment in an approved manner.

1.10.1.8 Hardboard barriers shall be provided and installed to close the bottom of the LV compartment to reduce the occurrence of condensation in the compartment during storage and prior to commissioning of the miniature substations.

1.10.2 Type A Miniature substations - Bushings, Busbars and Connections

1.10.2.1 All LV bushings shall be of porcelain or other insulating material to the approval of the Engineer. DMC components or similar will not be accepted.

1.10.2.2 All busbars, neutral bar and earth bar shall be made of hard-drawn copper, tinned, colour coded and be so dimensioned that at full load the current density shall not exceed 1,8 A/mm².

1.10.2.3 The rated short-time current withstand level (1 s) of the LV busbars shall be 25kA for mini-subs up to 800 kVA.

1.10.2.4 The neutral bar shall have the same cross-sectional area as the phase busbars.

1.10.2.5 The earth bar dimensions and the phase and neutral busbar lengths shall be as detailed.

1.10.2.6 The connection between the transformer LV bushings and the busbars shall be as detailed. These connections shall be solid copper conductors or flexible copper conductors to approval and so designed that the circuit breakers may be independently removed for replacement.

1.10.2.7 The connections between the transformer LV bushings and the busbars and the connections of the bushing flags onto the spindles shall be fitted with locknuts at each connection point.

1.10.2.8 Phase busbars shall be pre-drilled with 12,5 mm holes suitably positioned for connections to either 3 x large frame MCCB's or 5 x J25S or equivalent MCCB's.

1.10.2.9 The neutral bar and earth bar shall have a minimum of eight predrilled 12,5 mm connection holes as detailed.

1.10.2.10 All pre-drilled connection holes on phase busbars, neutral bar and earth bar shall be fitted with M12 stainless steel bolts, nuts and washers.

1.10.2.11 The neutral bar shall be mounted on black nylon stand-off insulators. The insulators shall be rated to withstand a working voltage of 600 V under normal and damp conditions, and shall be rated to withstand a high voltage test of 2 kV for 5 minutes.

1.10.2.12 The neutral and earth bars shall be mounted using stainless steel torque shear bolts.

1.10.2.13 The neutral bar shall be connected to the earth bar with a removable solid copper earth strap as detailed.

1.10.2.14 Phase colour indication, r w b n, shall be positioned above the LV bushings.

1.10.2.15 All external earth connections on the units shall be of copper. Aluminium conductors

are not an acceptable alternative.

1.10.3 Type A Miniature substations - MCCB's and MCCB Backing Plate

1.10.3.1 The moulded case circuit breakers will be provided and fitted by others.

1.10.3.2 The miniature substations shall be fitted by the manufacturer with a 3CR12 corrosion resistant steel backing plate for subsequent mounting of the moulded case circuit breakers.

1.10.3.3 The MCCB backing plate shall be pre-drilled for the fitting of 3 x moulded case circuit breakers of rating 400 A, 600A or 800A arranged as detailed and for an alternative fitment of 5 x J25S MCCB's of rating up to 250A.

1.10.3.4 The backing plate shall be well positioned. The backing plate (and accordingly the MCCBs) shall be positioned relative to the busbars such that the required separations from earthed and live busbars and conductive parts and minimum arc venting spaces specified by the MCCB manufacturers are maintained. MCCB's currently utilized are the CBi Hy-Mag L40B, J25S and M35B types.

1.10.4 Type A Miniature substations - MCCB and LV Busbar Barrier Boards

1.10.4.1 A barrier board, to approval, shall be provided to shield the busbars, the connectors to the MCCB's and the MCCB incoming terminals to prevent inadvertent contact.

1.10.4.2 A further, separate barrier board, to approval, shall be provided to shield the MCCB outgoing terminals to prevent inadvertent contact.

1.10.4.3 Barrier boards shall be so positioned that the access to the operating toggles of the moulded case circuit breakers is not inhibited in any way, and such that these toggles can be operated safely.

1.10.5 Type A Miniature substations - LV Cable Clamping

1.10.5.1 The LV compartment shall be provided with a hot dipped galvanised unistrut and suitable K-clamps to secure a maximum of five 4-core cables ranging in size between 120 mm² and 300 mm². The minimum distance between the outgoing terminal droppers of the moulded-case circuit breakers and the bottom unistrut shall be 530 mm.

1.10.6 Type A Miniature substations - LV Metering

1.10.6.1 LV metering and LV switch compartment door meter windows are not required for the Type A miniature substations.

RING MAIN UNITS

1.11 Terminology

"Ring Main Unit" shall mean a metal-enclosed non-withdrawable switchgear assembly with an external metal enclosure and comprising two non-automatic ring main switch disconnectors and a switch-fuse combination tee-off connected in series by a no extensible common busbar.

1.12 Ratings

1.12.1 Rated Voltage

1.12.2 The rated voltage of the ring main units shall be 12 kV.

1.12.3 Rated Insulation Level

1.12.3.1 The rated peak lightning impulse peak withstand voltage shall be 95 kV and the rated short duration power frequency withstands voltage 28 kV.

1.12.4 Rated Normal Current

1.12.5 The rated normal current of the ring main switch disconnectors shall be 630 A.

1.12.6 The rated normal current of the switch-fuse combination tee-off shall be 200 A.

1.12.7 The rated normal current of the busbars shall be the same as the ring main switch disconnectors.
1.12.8 Rated Short-time and Peak Withstand Current
1.12.9 The rated short time withstand rms current shall be 20 kA for 3 seconds, and the rated peak withstand current shall be 50 kA.
1.12.10 Rated Breaking Current and Short Circuit Breaking Current
1.12.11 The rated breaking current of the ring main switch-disconnectors shall be in accordance with the requirements of SANS 1874.
1.12.12 The rated breaking current of the switch of the switch-fuse combination modules shall be 200 A, in accordance with SANS 62271-105.
1.12.13 The rated short circuit breaking current of the switch-fuse combination tee-off shall be 20 kA.
1.12.14 Rated Short Circuit Making Current
1.12.15 The rated short circuit making current of the ring main switch disconnectors, switch-fuse combination tee-off and earthing switches shall be 50 kA.

1.13 Internal Arc Classification

1.13.1 The ring main units shall have a minimum internal arc classification of IAC AFL 20 kA 0,5 s, in accordance with the requirements of SANS 62271-200.
1.13.2 The internal arc classification of the completed MV compartment of the miniature substation shall comply with the requirements of Section 5.3 of this specification.

1.14 General Requirements

1.14.1 Design and Construction of Switchgear
1.14.1.1 The ring main units shall comply with the requirements of SANS 1874 and SANS 62271-200 and shall be of fixed pattern design.
1.14.1.2 All primary components of the equipment shall be made and assembled by the same Manufacturer.
1.14.1.3 Only units with proven service history shall be considered.
1.14.1.4 All switching devices shall be operable from the front of the ring main unit.
1.14.1.5 The ring main units shall be provided with lifting eyes with a minimum diameter of 30 mm for lifting or slinging.

1.14.2 Insulating/Interrupting Medium

1.14.2.1 The ring main units shall be SF6 insulated.
1.14.2.2 Only new SF6 gas complying with the requirements of IEC 60376 shall be used.
1.14.2.3 The ring main unit gas-insulated switch compartment shall be factory sealed for life for a minimum maintenance-free lifespan of 30 years.
1.14.2.4 The ring main units shall not require routine gas replenishment during normal service.
1.14.2.5 The manufacturer of the ring main units shall provide full details of the programme for safe recovery of SF6 gas after their service life and shall provide full details of the SF6 gas recovery programme.
1.14.2.6 The cartridge fuses on switch-fuse combination modules shall be air insulated.
1.14.2.7 The interrupting medium for the switch disconnectors and switch fuse combination disconnectors shall be SF6 gas or vacuum, and shall be detailed in the Returnable Schedules.

1.14.3 Monitoring Facility for Insulating Medium

1.14.3.1 An SF6 gas pressure monitoring gauge shall be provided to indicate safe and unsafe gas pressure and shall be visible from the front panel.

1.14.4 Degree of Protection

1.14.4.1 The degree of protection of all accessible enclosures and compartments of the ring main units shall be a minimum of IP 4X, in accordance with SANS 60529, applicable when all doors are closed.

1.14.5 Accessibility of Compartments

1.14.5.1 The ring main unit gas-insulated switch compartment shall be a non-accessible compartment in accordance with SANS 62271-200.

1.14.5.2 The ring main unit air-insulated fuse compartment shall be an interlock-controlled accessible compartment in accordance with SANS 62271-200.

1.14.5.3 The ring main unit cable termination boxes shall be interlock-controlled accessible compartments in accordance with SANS 62271-200.

1.14.5.4 The ring main unit cable test facility compartments, where applicable, shall be interlock-controlled accessible compartments in accordance with SANS 62271-200.

1.14.6 Partition Class

1.14.6.1 The ring main units shall be of Partition Class PM in accordance with SANS 62271-200, with earthed metallic partitions between live compartments.

1.14.7 Service Continuity Category

1.14.7.1 The ring main units shall be Loss of Service Continuity (LSC) category LSC1 in accordance with SANS 62271-200.

1.14.8 Cable Test Facilities

1.14.8.1 Integral cable test facilities that do not require access to the cable boxes or removal of the separable connectors of the cable termination shall be provided on the switch disconnector modules for the application of test voltages to the associated circuit of up to 19 kV DC or 13 kV AC to earth.

1.14.8.2 Where provided for by the particular switchgear design, integral cable test facilities that do not require access to the cable boxes or removal of the separable connectors of the cable termination shall also be provided on the switch-fuse combination tee-off modules.

1.14.8.3 The cable test facilities shall not require the use of any loose test plugs or prods and shall be directly accessible from the front of the ring main unit.

1.14.8.4 Top mounted test facilities requiring the operator to lean into the miniature substation MV compartment shall not be acceptable.

1.14.8.5 Access to cable test facilities shall be interlock-controlled to ensure that the test facilities shall only be accessible when the associated earth switch is in the EARTH position, and the cable test facility access shall be capable of being padlocked.

1.14.8.6 The internal arc classification of the ring main unit pertaining to other live compartments shall be maintained while the cable test facilities on any particular switch module are accessed.

1.14.8.7 Phase colours and warning notices shall be permanently marked on test terminals, to approval.

1.14.9 Cable Earthing Facilities

1.14.9.1 Each ring main switch disconnectors and switch-fuse combination tee-off shall be fitted with an integral cable earthing switch that complies with the requirements of SANS 62271-102 and SANS 62271-200.

1.14.9.2 Cable earthing facilities which require the use of loose equipment or attachments shall not be acceptable.

1.14.9.3 Earthing facilities on the switch-fuse combination modules shall earth both sides of the fuse link.

1.14.10 Cable Live Indication

1.14.10.1 A three phase voltage detection system (VDS) suitable for the detection and indication of presence and absence of operating voltage and complying with the requirements of SANS 61243-5 shall be provided on each switching device on the ring main units. Single phase VIS modules shall not be acceptable.

1.14.10.2 The VDS system shall provide permanent VDS indication and shall provide for electrical phasing between modules on the ring main units through the use of universal phase comparators (UPCs).

1.14.10.3 All capacitive dividers utilised for live circuit indication shall have been type tested, shall have proven in-service performance history in harsh coastal environments, and shall be individually tested for partial discharge in accordance with the requirements of SANS 60270.

1.14.11 Mechanism Locking Facilities

1.14.11.1 Each ring main switch disconnector and switch-fuse combination tee-off shall be padlockable in the ON position, the OFF position and the EARTH position in accordance with SANS 1874.

1.14.11.2 Each push button for operation of the ring main unit (eg. Trip / close push buttons on switch-fuse combination tee-off) shall be fitted with a padlockable metal cover to prevent unauthorised operation.

1.14.11.3 The operating control locking facilities shall be designed to be locked with minipadlocks with 4 mm shackles.

1.14.12 General Interlocks

1.14.12.1 Positive mechanical interlocking shall be provided on the ring main units operating mechanisms, fuse compartment access and cable compartment covers in accordance with the requirements of SANS 1874.

1.14.13 Covers and Doors

1.14.13.1 All standard covers and doors provided for in the design of the ring main unit shall be included irrespective of the ring main unit being housed within a miniature substation MV compartment. For inspection purposes any weather covers shall be held in the open position by means of a mechanical device. All details to be provided to the approval of the Engineer.

1.14.14 RMU Rating Plate

1.14.14.1 The ring main unit shall be fitted with a rating plate complying with the requirements of SANS 1874.

1.14.15 Marking and Labelling

1.14.15.1 The ring main units shall have markings and labelling as specified in SANS 1874.

1.14.15.2 Single line operating diagrams shall be clearly marked on the front panel of the units.

1.14.15.3 All apparatus and interlocks shall be clearly labelled indicating their purpose, function and operating procedure.

1.14.15.4 All main circuit bushings and test contacts shall be legibly and indelibly marked with the appropriate phase designation assigned to that terminal. The markings shall be one of L1, L2 or L3, as appropriate.

1.14.15.5 The material, method of printing and method of fixing of all labels shall be to the approval of the Engineer. Mechanical methods of fixing are preferred.

1.14.16 Paper stick-on labels shall not be acceptable.

1.14.16.1 Circuit label material provided for the units shall be of the sandwich board type with

black lettering on a white background. The labels shall be left blank for engraving by the Employer.

1.14.17 Earthing

1.14.17.1 The ring main units shall be provided with earth connection terminals and tinned copper earth bars complying with the requirements of SANS 1874.

1.14.17.2 The earth connection terminal for each metal enclosure and the main tank shall be suitable for the maximum earth fault current specified in Clause 3 of the specification, and shall be of size M12.

1.14.17.3 Two stainless steel nuts and washers shall be provided on each earth connection terminal.

1.14.17.4 All earth bars shall be bonded together providing electrical continuity. All bonding conductors used to interconnect the separate earth bars shall be copper and have a cross sectional area not less than that of the ring main unit earth bar.

1.14.17.5 A minimum of 4 holes diameter suitable for an M12 bolt shall be provided in the earth bar for earth connections.

1.14.17.6 Any earth bars external to the cable termination compartments shall be shrouded or covered in an approved manner to remove them from view and inhibit unauthorised access so to minimise the possibility of theft.

1.14.18 Painting and Protection against Corrosion

1.14.18.1 The ring main unit shall be painted and protected against corrosion in accordance with the requirements of SANS 1874.

1.14.18.2 The ring main unit gas-insulated switch compartment shall be constructed from stainless steel.

1.14.18.3 All other sheet steel work shall comprise an approved corrosion resistant metal.

1.14.18.4 All external nuts and bolts shall be manufactured from stainless steel. Care shall be taken to ensure that nuts and bolts are not over tightened such that the threads are damaged and the nuts and bolts cannot be loosened and/or retightened.

1.15 Switch Disconnector Modules

1.15.1 Each switch disconnector shall be a three pole switch that complies with the requirements for general purpose switches of SANS 62271-103.

1.15.2 Switch disconnectors shall be at least Class E2 M1 in accordance with SANS 62271-103.

1.15.3 The operating mechanism of switch disconnectors shall provide independent manual closing and opening

1.16 Cable Termination Enclosures, Terminations and Bushings

1.16.1 Cable Termination Enclosures and Terminations

1.16.1.1 The ring main units shall be fitted with air filled cable termination enclosures complying with SANS 876.

1.16.1.2 The cable termination enclosures shall be suitable for termination of three core impregnated paper insulated 11 kV cables of up to 120 mm2 with dry type cable terminations complying with SANS 1332 (95 kV BIL).

1.16.1.3 The cable termination enclosures shall be suitable for Type 2 shrouded and Type 3 unscreened separable connector terminations in accordance with SANS 876.

1.16.1.4 MV cable tails for the switch-fuse combination module shall be terminated by the Contractor with bolted lugs and screened seperable T-connectors (SSCs), as specified separately, and for the switch disconnector modules will be terminated by others with unscreened separable T-connectors (USCs). The USCs currently in use are the Raychem RICS 5-series and RICS 3-series.

1.16.1.5 The cable bushings shall be positioned in the ring main unit in the horizontal, not

vertical, axis.

1.16.1.6 The height of the cable termination enclosures shall be a minimum of 650 mm, measured from the centre line of the cable bushings to the gland plate or cable support clamp, in accordance with SANS 876.

1.16.1.7 Cable termination enclosures with cable bushings at staggered heights will not be accepted.

1.16.1.8 The cable termination enclosures shall be fitted with internal arc rated removable covers in accordance with the internal arc classification of the ring main unit.

1.16.1.9 Any breathing and/or drain vents in the cable termination enclosures necessary to prevent condensation or facilitate draining shall be suitably vermin proofed.

1.16.1.10 Each cable termination enclosure shall be provided with a cable support clamp suitable for clamping of 35 mm2 - 120 mm2 PILC DSTA cable, and complying with the requirements of SANS 876.

1.16.1.11 The clamp arrangement shall be so designed that the cable is firmly secured but that no stress due to bending is placed on the cable when terminated. Any other arrangements for securing of the cables shall be subject to the Engineer's approval.

1.16.1.12 All 12 kV cables for connection to the switch disconnector modules will be provided, installed and terminated by others.

1.16.1.13 The cable connections between the ring main unit switch-fuse combination tee- off and the miniature substation transformer MV bushings shall be installed by the manufacturer in accordance with Section 7.7 of this specification.

1.16.2 Cable Bushings

1.16.2.1 The ring main unit switch disconnector modules and switch-fuse combination modules shall be fitted with Type A bushings complying with EN 50181.

1.16.2.2 The Type A bushings shall have an M16 x 2 thread and be suitable for the use of unscreened separable connectors.

1.16.2.3 The bushings shall be fitted with M12 stainless steel reducing stems and M12 nut, washer and spring washers.

1.16.2.4 The contractor shall ensure that M12 reducing stems supplied are of such size that when fully installed in the Type A bushing the 16 / 12 mm collar of the reducing stem remains fully recessed behind the contact face of the bushing and does not prevent good electrical contact between the cable lug and the bushing contact face

1.16.2.5 The bushings shall be manufactured and tested in accordance with SANS 60137. In addition to the voltage test specified in SANS 60137 the bushings shall be partial discharge tested in accordance with the requirements of SANS 60270. The magnitude of the discharge shall not be greater than 5 pC.

1.16.2.6 The surface of the bushings shall be smooth and free from blemishes and patches or fillings.

1.16.2.7 The bushings shall be made from insulating material to the approval of the Engineer. Dough moulded compound cable bushings are not acceptable.

1.16.2.8 Transit/storage bushing protection covers shall be fixed to the equipment to prevent damage to bushings.

1.17 Earth Fault Indication Equipment

1.17.1 One set of approved earth fault indication equipment comprising a split core current transformer and a self-powered control and indicating unit shall be provided with each ring main unit.

1.17.2 The control and indicating unit shall provide for manual resetting, with an automatic self resetting facility with selectable time delay.

1.17.3 The sensitivity of this equipment shall be such that a current imbalance less than 50 A but not less than 25 A will operate the relay.

1.17.4 Only equipment proven on 12 kV systems will be considered. Full details of the earth fault indication equipment offered are to be submitted with the tender.

1.17.5 The control and indicating unit shall be mounted on the ring main unit or miniature substation MV compartment such that it is clearly visible and accessible to the operator from the operating side (i.e. front) of the ring main unit with the MV compartment doors open.

1.17.6 The earth fault indicator current sensor shall be wired to and temporarily secured onto the cable support clamp fitted in the left-hand side switch disconnector cable termination enclosure (when viewed from the front of the ring main unit).

1.17.7 All wiring between the control and indicating unit and the current sensor shall be routed behind the front fascia of the ring main unit.

1.17.8 The earth fault indication equipment shall in addition be supplied with a remote indicator which shall be mounted on the outside of the MV compartment in such a manner that it can be clearly viewed from the front of the miniature substation (street side) without having to open the MV compartment. The remote indicator shall be visible during daylight and protected against vandalism by means of a steel tube fitted around the indicator and welded onto the enclosure.

1.17.9 The control unit and remote indicator shall not be mounted onto any removable sections of the enclosure and no wiring shall pass through these sections. If the remote indicator is mounted on the enclosure door it shall be situated as close as possible to the hinge side.

1.18 Maintenance Requirements

1.18.1 The switchgear offered shall not be excessively maintenance intensive, and shall be designed to be compatible with a maintenance cycle of not shorter than three years. However, a minimum period of five years would be a recommendation. The maintenance period and maintenance recommendations shall be clearly stated by the manufacturer in the tender documentation.

1.19 RMU Training

1.19.1 Tenderers shall include a separate price in the Price Schedule and a proposal for training of the Employer's staff in the theory and use of the RMU supplied with the miniature substations.

1.19.2 The training shall include, but not be limited to, theory of operation, detailed overview of equipment, preventative maintenance, maintenance manual review, interlocks and safety features, testing and troubleshooting, repairs, and a practical demonstration.

1.19.3 The training shall include the provision of manuals, all the necessary reference documentation and detailed drawings. All documentation shall be in English.

1.19.4 Training shall be carried out in groups of nominal size 15 individuals per session, although class sizes of 20 individuals should be accommodated if operational requirements dictate. It is expected that approximately 75 - 100 staff members will require training (ie. 5 repeats).

1.19.5 The training per group shall be completed within a single day and the full training intervention should be planned for completion within five working days.

1.19.6 Any special tools shall be identified and if not included shall be quoted for separately.

1.19.7 On completion of the training each candidate shall be provided with certification of attendance of the course, with copies of the certification being provided to the Employer.

1.19.8 The price shall cover the complete training and include all preparation, travelling, accommodations and incidental costs including all course materials. The price is for the complete training intervention (ie. five working days), and is not a price per person or day.

1.19.9 All training shall be undertaken at the Employer's premises.

DRAWINGS AND INFORMATION

1.20 Drawings

Tenderers shall submit with their tenders the following drawings to enable the Employer to verify the compliance of the equipment offered with the specification:

1.20.1 Fully dimensioned drawings indicating the general arrangement of the transformers and miniature substations.

1.20.2 Fully dimensioned arrangement drawing for the ring main unit showing all operating and cable test facilities, cable boxes, cable clamping, cable termination arrangements and clearances between bushings and from bushing centres to earth.

1.20.3 Section drawings of the ring main unit showing general details of construction and all principal components and dimensions, including internal arc overpressure relief provisions as offered for each miniature substation type and energy paths for each main compartment.

1.20.4 Full electrical schematic diagrams for miniature substations, transformers and ring main units, including LV compartment layout drawings, shunt tripping schematics and equipment details, and electrical interlock schematics.

1.20.5 In addition the general arrangement and electrical schematic diagrams shall be resubmitted by the successful Tenderer after contract award for formal approval before manufacture of the equipment is commenced. The Contractor shall provide one electronic copy (in DXF and pdf formats) of each approved drawing for the Employers records before commencement of deliveries.

1.21 Instruction Books

Copies, in English, of operating and maintenance instructions covering each type of equipment provided shall be supplied by the Contractor before delivery, and these shall include full detailed drawings. A copy shall also be provided on an USB Flash Drive in Portable Document Format (pdf). These shall include a comprehensive spare parts catalogue.

TESTS AND INSPECTIONS

1.22 Inspections

1.22.1 During manufacture and prior to despatch the ring main units, transformers and assembled miniature substations will be inspected by the Engineer or his duly appointed representative who will call for such tests as he may consider necessary. To this end, the Engineer or his representative shall, during normal working hours, be given all reasonable access and facilities for the carrying out of his duties and shall have the right of entry into the factory of the manufacturer and the factory of any sub-contractor to the manufacturer, where work in accordance with this specification may be in progress.

1.22.2 Before the dispatch of any transformer, miniature substation or ring main unit from the factory of manufacture it shall have been inspected by the Engineer or his duly appointed representative and an Acceptance Certificate shall have been issued. The manufacturer shall notify the Engineer at least one week in advance of the proposed dates for final inspections, and units shall be fully completed prior to the day of the final inspection.

1.23 Type Tests

1.23.1 The switchgear, transformers, miniature substations and MV HRC Fuses shall have passed such type tests as are laid down in SANS 780, SANS 1029, SANS 1874, SANS 60282-1, SANS 62271-200, SANS 62271-202, and shall comply with these specifications. Such type tests shall include short circuit withstand tests of transformers and determination of sound level tests, as specified in SANS 780.

1.23.2 The tests shall have been conducted by an accredited independent test laboratory and approved by the Engineer. The testing laboratory shall be accredited by a national

accreditation body that is a member of the International Laboratory Accreditation Cooperation.

1.23.3 The Tenderer shall submit with his tender a Schedule of Type Tests detailing all completed type tests applicable to each item tendered, as specified. The schedule shall detail the full description of the item tested, the test authority, the type test certificate numbers, the applicable standard and the specific tests covered by the certificate. Type tests not detailed on the schedule will be deemed not to have been completed.

1.23.4 The Tenderer shall submit copies of the cover sheets, the tested equipment detail pages and the results summaries for the type test certificates detailed in the Type Tests Schedule, as well as certificates of rating.

1.23.5 Tenderers shall not submit the full type test certificates but only the relevant pages detailed above. The full type test certificates shall be made available to the Engineer for review on request.

1.23.6 Only identical units to those successfully type tested or, in the case of transformers, units defined as Similar Transformers (in accordance with SANS 60076-5 Annex B) to those that have been type tested will be acceptable. Non-applicable type test certificates should not be submitted. Tenderers shall submit copies of complete detailed drawings of internal connections and facilities as type tested.

1.23.7 Where the Tenderer is invoking the SANS 60076-5 Similar Transformers definition to justify the applicability of a type test carried out on a unit of different rating, the Tenderer shall clearly indicate this in the Schedule of Type Tests detailed above, per instance, detailing the certificate number that is deemed to be applicable and including clear justification explaining why the Similar Transformers definition is applicable with clear reference to the relevant sub-clause.

1.23.8 Tests may be waived by the Engineer.

1.24 Routine Tests

1.24.1 Routine tests as specified in SANS 780, SANS 1029, SANS 1874, SANS 62271-200, SANS 62271-202 and other applicable standards shall be carried out on all units prior to dispatch, and shall be witnessed by the Engineer or his duly appointed representative.

1.24.2 In addition to the routine tests laid down in Section 6 of SANS 780 (to be performed on all transformers), sample sound level tests shall be carried out on one or more samples from each batch (ie. Separate purchase order and kVA rating) of transformers and miniature substations to prove on going compliance with the SANS 780 audio sound level limits.

1.24.3 Insulation resistance Megger readings of MV phase to LV phase, as well as MV and LV phase to earth (neutral to earth link removed) shall be taken after assembly and in the presence of the Engineer. The minimum acceptable readings for the high and low voltage sides are 2 000 MΩ and 500 MΩ at 2 kV minimum, respectively.

1.24.4 PCB free / oil compliance test certificates shall be submitted to the Employer per batch of transformers or miniature substations, certifying that the oil used in the transformers complies with the required standards. Such certificates shall reference the full range of transformer serial numbers covered by the oil compliance test certificate.

1.24.5 Certificates giving the full results of all tests made on the equipment shall be submitted to the Engineer by the Contractor for approval prior to or at the time of delivery of the equipment. All routine test certification shall be dated and signed by the manufacturer's test engineer. Equipment will not be formally accepted until such time as full routine test certification has been submitted and approved.

1.24.6 In addition, all routine test certification shall be submitted electronically (in pdf format) to the Engineer prior to delivery of the equipment, for the Employer's records.

3.4.4. WAYLEAVES, PERMISSIONS AND PERMITS

The Contractor shall be responsible for obtaining all of the necessary wayleaves, permissions or permits applicable to working near any existing services or other infrastructure on Site, and shall ensure that any wayleaves, permissions or permits obtained by the Employer's Agent prior to the award of the contract are transferred into the Contractor's name.

The Contractor shall abide by any conditions imposed by such wayleaves, permissions or permits.

The Contractor shall ensure that all wayleaves, permissions and permits are kept on site and are available for inspection by the relevant service authorities on demand.

The Contractor shall also ensure that any wayleaves in respect of electricity services are renewed timeously every three months.

3.4.5 LOCAL PRODUCTION AND CONTENT

The Contractor will be required to comply with all requirements as stated in this document.

3.4.6 EMPLOYMENT OF SECURITY PERSONNEL

All security staff employed by the contractor supplier on behalf of the Stellenbosch Municipality or at any Stellenbosch Municipality property must be registered with Private Security Industry Regulatory Authority (PSiRA). Proof of such registration must be made available to the employer's agent upon request.

3.4.7 UNIVERSAL ACCESS

In pursuit of becoming a fully accessible city, the Stellenbosch Municipality expects all Consultants and Service Providers to design and construct to SANS Standards for accessible Design, and any relevant Stellenbosch Municipality documents as may be relevant, and to exhibit a commitment to employing Universal Design Principles in their design, construction, service and product delivery of construction projects. This applies to all projects whether new, temporary, upgrades or rehabilitation works.

The contractor will engage with project representatives and the Stellenbosch Municipality's Universal Accessibility Department on how Universal Design Principles will enhance accessibility, within this project, that meets a variety of needs and creates a city that is accessible to everyone.

3.4.8 UNBUNDLING OF MUNICIPAL INFRASTRUCTURE ASSETS

The unbundling or componentization of the Property, Plant and Equipment (PPE) assets is required to update the Fixed Asset Register (FAR) as well as for effective asset maintenance and provision of services. The FAR will annually be updated for all assets and components. All new assets to be recorded on the FAR would there for have to be unbundled into its constituent components and all components be recorded on the FAR under the parent asset. The unbundling of primary assets into secondary components will be to a level that is sufficient for GRAP 17 compliance. Generally, the componentization of the PPE assets will be based on the component value, type of component (civil, electrical & mechanical) as well as anticipated lifespan of the component.

The unbundling of projects may only commence once the project is complete, all cost is known, including retention fees, and the following documents are available:

- Final bill of quantities;
- As-built plans;
- Completion certificate; and
- Final payment certificate.

All capital expenditure per project or per capital suspense must be verified in order to ensure that the total expenditure on a project is included, that is professional fees, actual cost, retention fees and all other relevant expenditure.

Once the final cost is determined, then the unbundling of the project commences. The total project cost should be broken down to a component level.

The following information should be provided for each component of the capital asset once the

project has been unbundled:

- Asset description;
- Original cost;
- Capital suspense account;
- WIP Asset code;
- Expected useful life;
- Acquisition date (Equal to the date of last expenditure, except retention);
- Start depreciation date;
- Asset Class as per Asset hierarchy

All unbundled capital assets must be captured spatially by geo referencing it in ESRI or Arcmap or a compatible spatial program

In doing so the replaced or upgraded capital assets must be identified.

When a replacement or upgrade is identified, the following information must be provided, the asset code, the portion in units that is replaced or in the case of a complete replacement an indication to this extend.

The GIS layer for as-built plans must be updated independently for the capital asset register layer. All information must be made available in electronic format to the Asset and IT section

Find below list of generic components per asset type is listed below for ROADS, but additional/ special components would however also have to be considered when unbundling assets.

NB FAILURE TO COMPLY WITH THE ABOVE REQUIREMENTS THE BID WILL BE CONSIDERED AS NON RESPONSIVE.AND WILL BE DISQUALIFIED.

MFMA — Local Government Capital Asset Management Guideline

	USEFUL LIFE IN YEARS		
	MIN		MAX
ROADS (Roads, Pavements, Bridges & Storm Water)			
BRIDGES			
Vehicle			
Bridges - Concrete	60	-	80
Bridges - Steel	40	-	50
Bridges - Timber	25	-	40
Pedestrian			
Bridges - Concrete	60	-	80
Bridges – Steel	40	-	50
Bridges – Timber	25	-	40
Railway			
Bridges - Concrete	60	-	80
Bridges – Steel	40	-	50
Bridges - Timber	25	-	40
Reinforced retaining walls			
Earth	10	-	15
Concrete	25	-	30
Expansion and construction joints	15	-	20

STELLENBOSCH
STELLENBOSCH • PNIEL • FRANSCHHOEK
MUNISIPALITEIT • UMASIPALA • MUNICIPALITY

STORM WATER			
Culverts	25	-	40
Concrete	40	-	60
Armco	25	-	40
Drains			
Earthworks	80	-	100
Concrete lining	25	-	50
Stop banks	40	-	50
Pipes	25	-	50
Coastal			
Structure (Retaining walls)	20	-	40
Piers	60	-	80
Storm water outfalls	60	-	80

ROADS			
Kerb and channels	40	-	50
Municipal roads - Asphalt surface	10	-	20
- Asphalt layer	30	-	50
- Concrete surface	10	-	30
- Concrete layer	30	-	50
- Gravel surface	3	-	10
National roads - Asphalt surface	10	-	20
- Asphalt layer	30	-	50
- Concrete surface	10	-	30
- Concrete layer	30	-	50
- Gravel surface	3	-	10
Provincial roads - Asphalt surface	10	-	20
- Asphalt layer	30	-	50
- Concrete surface	10	-	30

	USEFUL LIFE IN YEARS		
	MIN		**MAX**
- Concrete layer	30	-	50
- Gravel surface	3	-	10
Crash barriers	10	-	30
Retaining walls	30	-	60
Overload control centres	15	-	20
Electronic hardware	10	-	15
Other equipment	10	-	20
Pedestrian footpaths	15	-	30
Street lighting	25	-	40
Subways	40	-	50
Traffic islands	40	-	50
Traffic lights	15	-	20
Traffic lights – coastal	10	-	15
Traffic signs	5	-	15
Toll road plazas	20	-	30

STELLENBOSCH
STELLENBOSCH • PNIEL • FRANSCHHOEK
MUNISIPALITEIT • UMASIPALA • MUNICIPALITY

Example of a Capital Works Project Form to be completed once project is completed

CAPITAL WORKS PROJECT

CAPITAL PROJECT DETAIL/ DESCRIPTION

BUSINESS UNIT	DEPARTMENT

CONTRACT NUMBER	VOTE

SUPPLIER

PROJECT START DATE	PROJECT FINISH DATE

PROJECT COST	MAINTENANCE PLAN COST	MAINTENANCE VOTE

PROJECT MANAGER:	GM/PROCESS MANAGER:
NAME:	NAME:
SIGNATURE:	SIGNATURE:
CONTACT NUMBER:	CONTACT NUMBER:

ASSET CONTROL

ASSET NUMBER/PROJECT NUMBER

DATE RECEIVED	DATE RECORDED IN FAR

ASSET CONTROL:
NAME:
SIGNATURE:

STELLENBOSCH
STELLENBOSCH • PNIEL • FRANSCHHOEK
MUNISIPALITEIT • UMASIPALA • MUNICIPALITY

C3.5 Management

CONTENTS

3.5.1. FORMS FOR CONTRACT ADMINISTRATION....377
3.5.2 PARTICIPATION OF TARGETED LABOUR....378
3.5.3. COMMUNITY LIAISON OFFICER....379
3.5.4. PARTICIPATION OF TARGETED ENTERPRISES....379
3.5.5. CONSTRUCTION PROGRAMME....381
3.5.6. PROCEDURES DURING CONSTRUCTION....381
3.5.7. SITE FACILITIES AVAILABLE.... 381
3.5.8. ABNORMAL RAINFALL....382
3.5.9. TIME RELATED ITEMS (Sub-Clause 8.2.2).... 382
3.5.10. NAMEBOARD (Sub-Clause 3.2.1).... 382
3.5.11. PROTECTION FROM STORMS AND FLOODS.... 382
3.5.12. EXISTING SERVICES.... 382
3.5.13. ACCOMMODATION OF TRAFFIC AND PUBLIC ACCESS.... 383
3.5.14. SETTING OUT OF WORKS.... 383
3.5.15. SANITARY CONDITIONS.... 383
3.5.16. CONSTRUCTION IN CONFINED AREAS.... 383
3.5.17. DENSITY TESTS / CONCRETE CUBES....383
3.5.18. ENVIRONMENTAL MANAGEMENT PROGRAMME.... 384
3.5.19. HEALTH AND SAFETY.... 384
3.5.20 QUALITY CONTROL SHEETS....384
3.5.21 GEOTECHNICAL REPORT....384

3.5.1. FORMS FOR CONTRACT ADMINISTRATION

The Contractor shall complete, sign and submit with each monthly statement for payment, the following updated returns (the format of which are attached in C3.6 Annexes as amended from time to time):

a) Monthly Project Labour Report (Annex 1)
b) B-BBEE Sub-contract Expenditure Report (Annex 2)
c) Joint Venture Expenditure Report (Annex 3)
d) Targeted Labour Contract Participation Expenditure Report (**Not Used**)
e) Targeted Enterprises Contract Participation Expenditure Report (**Not Used**)

The Monthly Project Labour Report must include details of all labour (including that of sub-contractors) that are South African citizens earning less than R350.00 per day, as adjusted from time to time (excluding any benefits), who are employed on a temporary or contract basis on this contract in the month in question.

In addition to the Monthly Project Labour Report the Contractor shall simultaneously furnish the Employer's Agent with copies of the signed employment contracts entered into with such labour, together with certified copies of identification documents as well as evidence of payments to such labour in the form of copies of payslips or payroll runs. If the worker is paid in cash or by cheque, this information must be recorded on the envelope and the worker must acknowledge receipt of payment by signing for it and proof of such acknowledgement shall be furnished to the Employer's Agent.

The Monthly Project Labour Reports shall be completed and submitted in accordance with the instructions therein and copies of all submitted documents must be kept on site be made available to the employer's agent upon request.

The **B-BBEE Sub-contract Expenditure Report** is required for monitoring the prime contactor's compliance with the sub-contracting conditions of the **Preference Schedule**.

The Joint Venture Expenditure Report is required for monitoring the joint venture's compliance with the percentage contributions of the JV partners as tendered, where the joint venture has been awarded preference points in respect of its consolidated B-BBEE scorecard.

The Targeted Labour Contract Participation Expenditure Report (if applicable) is required for monitoring the contractor's compliance for achieving the specified minimum targeted labour contract participation goal (CPG_L) and, if applicable, for calculating any penalty in terms thereof.

The Targeted Enterprises Contract Participation Expenditure Report (if applicable) is required for monitoring the contractor's compliance for achieving the specified minimum targeted enterprises contract participation goal (CPG_E) and, if applicable, for calculating any penalty in terms thereof.

The Expenditure Reports shall be verified by the Employer's Agent/Employer's Agent's Representative.

In respect of Annexes 2 and 3, the Employer shall, in addition to any other sanctions available to it, apply the financial penalties applicable to breach of preferencing conditions in the **Preference Schedule** Preference Schedule in Part T2.2 Returnable Schedules. In the case of joint ventures (Annex 3), the contractor shall prove his compliance with item 6) in Section 2 of the Preference Schedule by providing a consolidated scorecard at his own cost on instruction from the Employer's Agent.

3.5.2 PARTICIPATION OF TARGETED LABOUR

3.5.2.1 Minimum targeted labour contract participation goal

Not Used

3.5.2.2 Definitions

For the purposes of the requirements in respect of the participation of targeted labour, the following definitions shall apply:

"Target area" means the Ward 20 of Stellenbosch (Crombie/Longlands) as shown on plan in Part C4: Site Information

"Targeted labour contract participation goal (CPG_L)" means the sum of the wages (excluding any benefits), for which the Contractor, or any of his/her sub-contractors contracts targeted labour in the performance of the contract, expressed as a percentage of the value of the contract.

"Targeted labour" means low and semi-skilled individuals, whose wages (excluding any benefits) do not exceed the threshold value, who reside in the target area, that are employed by the Contractor, or any of his/her sub-contractors, in the performance of the contract.

"Threshold value" is R350.00 per day as adjusted from time to time (excluding any benefits). The threshold value is not to be confused with any industry sector minimum wage determined in accordance with the Basic Conditions of Employment Act, 75 of 1977.

"Value of the contract" means the contract sum (accepted contract amount) less provisional sums, contingencies and VAT.

3.5.2.3 The selection and recruitment of targeted labour

All targeted labour (100% unskilled and semi-skilled) is to be drawn from specific local communities (defined in terms of the target area), such labour shall be identified using the relevant Sub-Council Job-Seekers Database. The Contractor shall request, via a Community Liaison Officer (if required in terms of the contract), a list of suitable candidates from the database, from which the Contractor shall make his/her final selection. The contractor shall enter into written contracts of temporary employment with all targeted labour.

Any difficulty experienced by the Contractor in identifying candidates though the Job-Seekers Database, or as regards any matter relating to the employment of targeted labour, shall be immediately referred to the Employer's Agent.

3.5.2.4 Contract participation goal credits

Credits towards the achieving the minimum CPG_L shall be granted by converting the total monetary value of wages paid to targeted labour (including that of sub-contractors) to a percentage of the value of the contract. No credits shall be accorded should the contractor/sub-contractor fail to enter into written contracts with the targeted labour. Furthermore, no credits shall be accorded in respect of targeted labour employed on work in respect of provisional sums or prime cost items. Such labour shall nevertheless be recorded on the Project Labour Report which is required to be furnished by the Contractor.

3.5.2.5 Training of targeted labour

The Contractor is required to provide all informal (on-the-job) skills training so as to ensure that a minimum level of competence is achieved and maintained, such that the various activities are carried out safely and to the required standard. The cost of informal training shall be included in the rates for the various work activities.

3.5.2.6 Penalties

The financial penalty to be applied for failing to meet the specified minimum targeted labour contract participation goal in the performance of the contract (unless proven to be beyond the control of the Contractor), is as follows:

$$\text{Penalty} = (CPG_L^S - CPG_L^A) \times P^*$$

Where CPG_L^S = the specified minimum targeted labour contract participation goal (expressed as a percentage).

CPG_L^A = the targeted labour contract participation goal achieved (expressed as a percentage).

P^* = the value of the contract.

3.5.3. COMMUNITY LIAISON OFFICER

It is a requirement of this Contract that a Community Liaison Officer (CLO) shall be appointed by the Contractor. The primary functions of the CLO shall be to assist the Contractor with the selection and recruitment of targeted labour, to represent the local community in matters concerning the use of targeted labour (and/or enterprises) on the works, and to assist with and facilitate communication between the Contractor, the Employer's Agent and the local communities.

The identification of suitable candidates (maximum 5; minimum 3) for the CLO position shall be resolved by the relevant Ward Councillor/s. Should suitable candidates not be identified within two weeks of the date of request, the Contractor shall be allowed to seek candidates from the relevant Sub-Council Job-Seekers Database. The final selection and appointment of the CLO in terms of the contract shall be the responsibility of the Contractor.

The period of appointment of the CLO shall be as stated in the Contract for Temporary Employment as a Community Liaison Officer referred to below. The date of commencement of temporary employment of the CLO shall be as agreed with the Employer's Agent.

It is required, therefore, that the Contractor enter into a contract of temporary employment with the selected CLO, the contracting parties being the Contractor and the CLO. To this end, a specimen Form of Contract of Temporary Employment as Community Liaison Officer is included in this document (Part C1.7: Agreement and Contract Data). This Form of Contract sets out, inter alia, the agreement between the parties, the duties and conditions of employment of the CLO (including the rate of remuneration to be paid). As said contract will be between the Contractor and the CLO, all costs involved shall be borne by the Contractor and the tender shall be deemed to include for this.

3.5.4. PARTICIPATION OF TARGETED ENTERPRISES

3.5.4.1 Minimum targeted enterprises contract participation goal

NOT USED

3.5.4.2 Definitions

For the purposes of the requirements in respect of the participation of targeted enterprises, the following definitions shall apply:

"Target area" means the Ward 20 of Stellenbosch (Crombie/Longlands) as shown on plan in Part C4: Site Information

"Targeted enterprises contract participation goal (CPG_E)" means the value of supplies, services or works (exclusive of VAT), for which the Contractor contracts targeted enterprises, either directly or indirectly,

in the performance of the contract, expressed as a percentage of the value of the contract.

"Targeted enterprises" means any sole trader, partnership or legal entity that acts as a supplier, manufacturer, service provider or sub-contractor, and which has its base of operations in the target area.

"Value of the contract" means the contract sum (accepted contract amount) less provisional sums, contingencies and VAT.

3.5.4.3 Achieving the contract participation goal

The contractor may achieve the specified minimum CPG_E as follows:

a) by engaging one or more targeted enterprises to perform commercially useful functions in the performance of the contract;

b) by engaging non-targeted enterprises, who in turn engage one or more targeted enterprises to perform commercially useful functions in the performance of the contract;

c) by a combination of the above.

The Contractor shall, within 5 working days of being requested by the Employer's Agent to do so, submit details of his/her plan to achieve the minimum CPG_E.

3.5.4.4 Contract participation goal credits

Credits towards achieving the minimum CPG_E shall be granted by converting the total monetary value (exclusive of VAT) of the agreements between the Contractor, or Contractor's sub-contractors, and targeted enterprises, to a percentage of the value of the contract.

No credits shall be accorded should the Contractor (or sub-contractors):

a) make direct payment to third parties in connection with the contract on behalf of targeted enterprises, when such payment is recovered by making deductions from payments due to the targeted enterprise;

b) fail to enter into written contractual agreements with the relevant targeted enterprises.

Credits claimed towards the contract participation goal shall be denied where such written contractual agreements contain any of the following:

c) conditions which are more onerous than those that exist in the prime contract (this contract);

d) payment procedures based on a pay when paid system;

e) authoritarian rights given to the employing contractor, with no recourse to independent adjudication in the event of a dispute arising.

No credits may be claimed in respect of targeted enterprises that that do not adhere to statutory labour practices.

No credits shall be accorded in respect of targeted enterprises engaged on work in respect of provisional sums or prime cost items.

In the event that a targeted enterprise sub-contracts to another targeted enterprise, only the value of the higher-level sub-contract shall be granted as credit towards achieving the specified minimum CPG_E.

In addition to the form required for contract administration (the Targeted Enterprises Contract Participation Expenditure Report), the Contractor shall furnish the Employer's Agent, upon written request, with documentary evidence that the targeted enterprises have their base of operations in the target area, copies of the contractual agreements with the various targeted enterprises, as well as documentary proof of payments made to the various targeted enterprises.

3.5.4.5 Penalties

The financial penalty to be applied for failing to meet the specified minimum targeted enterprises contract participation goal in the performance of the contract (unless proven to be beyond the control of the

Contractor), is as follows:

$$\text{Penalty} = (CPG_E^S - CPG_E^A) \times P^*$$

Where CPG_E^S = the specified minimum targeted enterprises contract participation goal (expressed as a percentage).

CPG_E^A = the targeted enterprises contract participation goal achieved (expressed as a percentage).

P^* = the value of the contract.

3.5.5. CONSTRUCTION PROGRAMME

3.5.5.1 Format

In addition to the requirements of Sub-Clause 5.6 of the General Conditions of Contract, the Contractors programme shall:

i) be in a bar chart form

ii) show the various activities related to a time-chart indicating the sequence of performing the works comprising the contract.

iii) indicate critical path activities

3.5.5.2 Allowances

The Contractors programme shall take the following into consideration:

i) expected weather conditions

ii) special non-working days as stipulated in the Appendix to Tender

iii) the accommodation and safeguarding of traffic

iv) Other contractors on site (refer to C3.4.16)

v) Training of targeted labour

3.5.6 PROCEDURES DURING CONSTRUCTION

The Contractor to supply, keep up to date and keep the following documents on site:

3.5.6.1 A full set of the latest construction drawings to be on site permanently for use by the Engineer and others.

3.5.6.2 The Contractor to supply and keep on site and A4 triplicate site instruction book.

3.5.6.3 The Contractor to supply an A4 duplicate diary on site. The Contractor to keep daily diary with at least the following information.

- Weather condition
- Record of any accidents and detail
- Record of construction activities of the day
- Information of any strikes
- Any other relevant information

3.5.7. SITE FACILITIES AVAILABLE

3.5.7.1 Source of Water Supply

Water is available from existing municipal network. The Contractor must make the temporary connection and install a meter at his own expense at a point approved by the Engineer.

The Stellenbosch Municipality: Water and Sanitation Department does not guarantee the sufficiency or continuity of the supply and no claims will be considered in this regard.

The Contractor will be held responsible for any wastage of water due to negligence.

Only non-potable water shall be used as far as possible for construction purposes in line with the City's new water restrictions and relevant bylaws for construction. The Contractor shall pay all charges for the non-potable water supply required. Any costs arising from this shall be covered under the rates tendered for the General Requirements and Conditions (i.e. Preliminary and General) items in the Bill of Quantities.

The potable water supply is may be used for the use of drinking and site office requirements. The Contractor shall be responsible for arranging these services and ensuring that these services are not wasted and are with discretion by his staff. The Contractor shall pay all installation and consumption charges for the potable water supply required (supply shall be separately metered by Contractor; City of Cape Town/ Stellenbosch Municipality industrial usage tariffs shall apply).

3.5.7.2 Source of Power Supply

The Contractor is to make his own arrangement for the supply of power.

A 1-phase and 3-phase power supply is available at the existing Pump station for the use of small tools and lighting. The Contractor shall make arrangements for the use of this with the Employer's officials, and shall pay all installation and consumption charges for the power supply required (supply shall be separately metered by Contractor) any costs arising from this shall be covered under the rates tendered for the General Requirements and Conditions (i.e Preliminary and General) items in the Bill of Quantities.

3.5.7.3 Location of Camp and Depot

The Contractor must make his own arrangements for a campsite. The Contractor shall make his own arrangements for the accommodation of labour. No labour will be allowed on site overnight.

3.5.7.4 Spoil Sites

No indiscriminate spoiling of material will be allowed.

All unsuitable surplus material shall be removed from the site and the Contractor shall make his own arrangements with regard to a suitable spoil site.

3.5.8. ABNORMAL RAINFALL

Refer to Contract Data – C1.2

3.5.9. TIME RELATED ITEMS (Sub-Clause 8.2.2)

An approved extension of time (other than an extension of time granted in terms of Clause 12(8) of the Special Conditions of Contract) will entitle the Contractor to submit a claim for additional payment. Any such approved additional payment will be made for proven additional costs for each relevant time related item but will be limited to a maximum amount determined form the sum tendered for such item and from the designated operation, the period stated for the completion of the item or the tendered contract period, as applicable.

3.5.10 NAMEBOARD (Sub-Clause 3.2.1)

The Contractor must make provision for two name boards as per the drawing bound in document.

3.5.11 PROTECTION FROM STORMS AND FLOODS

The sum allowed for in the Bills of Quantities shall be deemed to be full compensation for any damage to the Works due to storms, rain, floods, stormwater or subsurface water.

Under no circumstances shall the Contractor be entitled to any additional payment in this regard. The Contractor shall accept full responsibility and costs to handle water from any source on the Site.

3.5.12 EXISTING SERVICES

The Engineer will provide information regarding the location of existing utility services, but the Engineer does not accept responsibility for the accuracy of this information. The Contractor shall make further investigations to determine the exact locality, size and depth of existing services before commencing construction to ensure that no damage is done to any service.

The Contractor shall take all reasonable precautions to protect existing services during construction and during relocation of such services.

Any pipe, cable, conduit or other services of any nature whatsoever indicated to the Contractor and subsequently damaged as a result of the Contractor's operations shall be repaired and reinstated forthwith by the Contractor or by the authority concerned, all at the expense of the Contractor and to the satisfaction of the Engineer.

Whenever services are encountered which interfere with the execution of the Works and which require to be moved and relocated, the Contractor shall advise the Engineer who will determine the extent of the work, if any, to be undertaken by the Contractor in removing, relocating, and reinstating such services.

Any work required to be undertaken by the Contractor in the moving and relocation of services for which no provision is made in the contract documents, or for which no applicable tender rates exist, will be classed and paid for as "Daywork" as prescribed in the General Conditions of Contract.

The Contractor shall work in close co-operation with private owners or public authorities controlling services, which have to be protected, removed or relocated. No undertaking can be given as to the exact time of commencement or of completion of the relocation, removal or protection of services, which have to be carried out, by the owners or controlling authorities themselves. The Contractor is to make allowance in his programme for this contingency.

Where services have to be removed or relocated or protected the Engineer will at the request of the Contractor, notify or negotiate with the owners or authorities controlling those services, but the Employer does not accept liability for any costs resulting from delays in the relocation, removal or protection of any service, or delays as a result of delays in negotiations. The sum allowed for in the Bills of Quantities shall be deemed to be full compensation for the location and protection of existing services.

3.5.13. ACCOMMODATION OF TRAFFIC AND PUBLIC ACCESS

During all his operations and when using his machinery, plant and equipment, the Contractor shall at all times take the necessary care to protect the public and to facilitate the traffic flow.

3.5.14. SETTING OUT OF WORKS

All setting out required to carry out the work shall be undertaken by the Contractor. Setting out of the Works to be priced for in the item provided.

Commencement of works will only take place after Block Corners has been set out by a Registered Land Surveyor, appointed by the Client.

3.5.15. SANITARY CONDITIONS

The Contractor shall ensure that, during the period of construction, sanitary conditions prevail on the site and surrounding areas. Unhygienic behaviour that may cause contamination of the works or the surrounding area are strictly prohibited.

3.5.16. CONSTRUCTION IN CONFINED AREAS

It may be necessary for the Contractor to work within confined areas and no additional payment will be made for work done in restricted areas. The method of construction in these confined areas will depend largely on the Contractor's construction plant. However, the Contractor shall note that measurement and payment will be only in accordance with the specified cross-sections and dimensions, and that the tendered rates and amounts shall include full compensation for all special equipment and construction methods and for all difficulties encountered during working in confined areas and narrow widths, and at or around obstructions, and that no extra payment will be made nor will any claim for additional payment be considered in such cases.

3.5.17. DENSITY TESTS / CONCRETE CUBES

The Contractor shall carry out his own density tests on each compacted layer and these tests shall be submitted to the Engineer for scrutiny and approval before commencing with the construction of the following layer.

The Contractor also needs to do his own concrete cube tests, which is to be handed to the Engineer for scrutiny and approval. The Engineer may order that further, control tests are to be taken. The Engineer may order that control tests be taken by his own or another independent laboratory. A provisional number of tests are provided in the Bills of Quantities to allow for the cost of control tests.

The sum allowed shall, however, be under the control of the Engineers and payment shall only be made to the Contractor on receipt of proof of expenses incurred by the contractor for the tests, i.e. payments to be made to an independent laboratory.

Should these control tests indicate failure to obtain the required standards, the cost of the tests shall be for the Contractor's account. Cub/Density tests carried out be the Contractor in the normal course of his work shall not be covered by this sum and shall be carried out at his own expense. The tendered rates in the Bills of Quantities shall be deemed full compensation for the testing of materials.

3.5.18 ENVIRONMENTAL MANAGEMENT PROGRAMME

Refer to Annexure 4.

3.5.19 HEALTH AND SAFETY SPECIFICATION

Refer to Annexure 5.

3.5.20 QUALITY CONTROL SHEETS

Refer to Annexure 6.

3.5.21 GEOTECHNICAL REPORT

Refer to Annexure 7.

STELLENBOSCH
STELLENBOSCH • PNIEL • FRANSCHHOEK
MUNISIPALITEIT • UMASIPALA • MUNICIPALITY

STELLENBOSCH MUNICIPALITY

BID NO. B/SM 21/27

MAIN ROAD INTERSECTION IMPROVEMENTS: STRAND / ADAM TAS / ALEXANDER

C3.6 Annexes

CONTENTS

Annex 1: Monthly Project Labour Report……..386

Annex 2: B-BBEE Sub-contractor Expenditure Report……..389

Annex 3: Joint Venture Expenditure Report……..391

Annex 4: Environmental Specification ……..393

Annex 5: Health and Safety Specification……..412

Annex 6: Quality Control Sheets……443

Annex 7: Geotechnical Report……454

STELLENBOSCH
STELLENBOSCH • PNIEL • FRANSCHHOEK
MUNISIPALITEIT • UMASIPALA • MUNICIPALITY

ANNEXURE 1

STELLENBOSCH
STELLENBOSCH • PNIEL • FRANSCHHOEK
MUNISIPALITEIT • UMASIPALA • MUNICIPALITY

CONTRACT NO. AND NAME: .....

CONTRACTOR: .....

Instructions for completing and submitting this form:

General

1. The Monthly Project Labour Reports must be completed in full, using typed, capital letter characters; alternatively, should a computer not be available, handwritten in black ink.
2. Incomplete/incorrect/illegible forms will not be accepted.
3. Any conditions relating to targeted labour stipulated in the Contract (in case of contract services/works) shall apply to the completion and submission of these forms

Project Details

4. If a field is not applicable insert the letters: NA
5. A Contract Name and Number must be inserted.
6. On completion of the Contract the anticipated end date must be updated to reflect the actual end date.

Workers Details and Work Information

7. Care must be taken to ensure that worker details correspond accurately with the worker's ID document of which a **Certified copy must be kept for reporting**.

Jobseeker Database Reference Number

8. Unique number generated by Jobseekers system to confirm workers were sourced from the jobseeker's database operated by sub councils.

New Workers: Training, Reporting Threshold

9. A new worker is one in respect of the which a new employment contract is signed in the current month.
10. Refers to work days only. Formal accredited Training/Non-accredited training that does not form part of on-the-job training must be excluded from this entry.
11. All formal accredited/ non-accredited training that does not form part of the on-the-job training.
12. Workers earning more than the maximum daily rate (Reporting Threshold) (currently R350 excluding any benefits) shall not be reflected on this form at all.

Submission of Forms

13. Signed hardcopy forms must be scanned and submitted to the project manager in electronic (PDF) format, together with the completed form in Microsoft excel format.
14. Scanned copies of all applicable supporting documentation must be submitted along with each monthly project labour report. Copies of employment contracts and **Certified ID documents** are only required in respect of new workers.
15. Failure to adhere to reporting requirements may result in the withholding of payment; penalties being applied or both.

MONTHLY PROJECT LABOUR REPORT

Numbers in cells below e.g (5) refer to the relevant instructions above for completing and submitting forms

CONTRACT NAME (5):		CONTRACT NUMBER:	
DIRECTORATE:		DEPARTMENT:	
CONTRACTOR:		CONTRACTOR E-MAIL ADDRESS:	
CONTRACTOR CONTACT PERSON:		CONTRACTOR TEL. NUMBER:	CELL / WORK

PROJECT LABOUR REPORT CURRENT MONTH (Mark with an "X")

JAN	FEB	MAR	APR	MAY	JUN	JUL	AUG	SEP	OCT	NOV	DEC	YEAR (insert last 2 digits)	2	0		

ACTUAL START DATE (yyyy/mm/dd)								ANTICIPATED/ACTUAL END DATE (yyyy/mm/dd) (6)								
2	0							2	0							

TOTAL PROJECT EXPENDITURE/VALUE OF WORK DONE TO-DATE (INCLUDING ALL COSTS, BUT EXCLUDING VAT)

R											-		

STELLENBOSCH
STELLENBOSCH • PNIEL • FRANSCHHOEK
MUNISIPALITEIT • UMASIPALA • MUNICIPALITY

MONTHLY PROJECT LABOUR REPORT

CONTRACT NUMBER	

YEAR	MONTH		
		OF	

	(7)	(7)	(7)	(8)	(9)			(10)	(11)	(12)
No.	First Name	Surname	ID number	Jobseeker Database Reference Number	New Worker (Y/N)	Gender (M/F)	Disabled (Y/N)	No of days worked this month (excl. training)	No of training days this month (with stipend)	Rate of pay per day (R - c)
1.										
2.										
3.										
4.										
5.										
6.										
7.										
8.										
9.										
10.										
11.										
12.										
13.										
14.										
15.										

Declared by Contractor to be true and correct:	Name:		Signature:	
	Date:			

Received by Employer's Agent/ Project Manager/Representative:	Name:		Signature:	
	Date:			

STELLENBOSCH
STELLENBOSCH • PNIEL • FRANSCHHOEK
MUNISIPALITEIT • UMASIPALA • MUNICIPALITY

ANNEXURE 2

STELLENBOSCH
STELLENBOSCH • PNIEL • FRANSCHHOEK
MUNISIPALITEIT • UMASIPALA • MUNICIPALITY

CONTRACT NO. AND NAME: .....

CONTRACTOR: .....

B-BBEE SUB-CONTRACT EXPENDITURE REPORT BASED ON PAYMENT CERTIFICATE NO. .....

Value of the contract (as defined in the **Preference Schedule**) (**P***)	R	B-BBEE Status Level of Prime Contractor	

Name of Sub-contractor (list all)	**B-BBEE Status Level of Sub-contractor[1]**	**Total value of Sub-contract (excl. VAT)[1]**	**Value of Sub-contract work to date (excl. VAT)[1]**	**Value of Sub-contract work to Sub-contractors with a lower B-BBEE Status Level than Prime Contractor**
Sub-contractor A		R	R	R
Sub-contractor B		R	R	R
Sub-contractor C		R	R	R
			Total:	R
			Expressed as a percentage of **P***	%

[1]Documentary evidence to be provided

Signatures

Declared by Contractor to be true and correct: ..... **Date:** .....

Verified by Employer's Agent/ Employer's Agent's Representative: ..... **Date:** .....

STELLENBOSCH
STELLENBOSCH • PNIEL • FRANSCHHOEK
MUNISIPALITEIT • UMASIPALA • MUNICIPALITY

ANNEXURE 3

STELLENBOSCH
STELLENBOSCH • PNIEL • FRANSCHHOEK
MUNISIPALITEIT • UMASIPALA • MUNICIPALITY

CONTRACT NO. AND NAME: .....

CONTRACTOR: .....

JOINT VENTURE EXPENDITURE REPORT BASED ON PAYMENT CERTIFICATE NO. .....

Value of the contract (as defined in the **Preference Schedule**) (**P***)	R	B-BBEE Status Level of Joint Venture	

Name of Joint Venture partner (list all)	**B-BBEE Status Level of each JV partner as at contract award**	**Percentage contribution of JV partner per JV Agreement[1] A**	**Total value of JV partner's contribution (excl. VAT)[1] B = A% x P***	**Value of JV partner's contribution to date (excl. VAT)[1] C**	**Value of JV partner's contribution as a percentage of the work executed to date D = C/P*x100**
JV Partner A		%	R	R	%
JV Partner B		%	R	R	%
JV Partner C		%	R	R	%

[1]Documentary evidence to be provided

Signatures

Declared by Contractor to be true and correct: ..... **Date:** .....

Verified by Employer's Agent/ Employer's Agent's Representative:

..... **Date:** .....

STELLENBOSCH
STELLENBOSCH • PNIEL • FRANSCHHOEK
MUNISIPALITEIT • UMASIPALA • MUNICIPALITY

ANNEXURE 4

STELLENBOSCH
STELLENBOSCH • PNIEL • FRANSCHHOEK
MUNISIPALITEIT • UMASIPALA • MUNICIPALITY

EMP-STANDARD SPECIFICATION

SPECIFICATION - EM: ENVIRONMENTAL MANAGEMENT

TABLE OF CONTENTS

1 SCOPE 1
2 INTERPRETATIONS 1
2.1 Supporting Specifications 1
2.2 Application 1
2.3 Definitions. 1
3 MATERIALS 2
3.1 3.1 Materials handling, use and storage 2
3.2 Hazardous substances 3
3.2.1 Shutter oil and curing compound 3
3.2.2 Bitumen/Prime 3
4 PLANT 3
4.1 Ablution facilities 3
4.2 Eating areas 4
4.3 Solid waste management 4
4.4 Contaminated water 4
4.5 Site structures 4
4.6 Noise control 4
4.7 Lights 5
4.8 Fuel (petrol and diesel) and oil 5
4.9 Workshop, equipment maintenance and storage 5
4.10 Dust 6
4.11 Accommodation of site staff 6
5 CONSTRUCTION 6
5.1 Method Statements 6
5.2 Environmental awareness training 7
5.3 Construction personnel information posters 8
5.4 Site clearance 8
5.5 Site division 8
5.6 Site demarcation 8
5.7 "No go" areas 8
5.8 Protection of natural features 9
5.9 Protection of flora and fauna 9
5.10 Protection of archaeological and palaeontological remains 9
5.11 Access routes/ haul roads 9
5.12 Cement and concrete batching 10
5.13 Earthworks 10
5.14 Pumping 10
5.15 Bitumen/Prime 10
5.16 Fire control 11
5.17 Emergency procedures 11
5.18 Safety 12
5.19 Community relations 12
5.20 Erosion and sedimentation control 12
5.21 Aesthetics 12
5.22 Recreation 13
5.23 Access to site 13
5.24 Crane operations 13

STELLENBOSCH
STELLENBOSCH • PNIEL • FRANSCHHOEK
MUNISIPALITEIT • UMASIPALA • MUNICIPALITY

EMP-STANDARD SPECIFICATION

5.25 Trenching 13
5.26 Demolition 13
5.27 Drilling and jack hammering 14
5.28 Stockpiling 14
5.29 Site closure and rehabilitation 14
5.30 Temporary revegetation of the areas disturbed by construction. 14
5.31 Public Access to site 15
5.32 Temporary site closure 15
5.32.1 Hazardous materials stores 15
5.32.2 Safety 15
5.32.3 Erosion 15
5.32.4 Water contamination and pollution 15
6 TOLERANCES 15
6.1 Penalties 16
6.2 Removal from site and suspension of Works 16
7 MEASUREMENT AND PAYMENT 17
7.1 Basic principles 17
7.2 Scheduled items 17
7.2.1 All requirements of the environmental management specification 17
7.2.2 Provision of venue and staff attendance at the environmental awareness training course 17
7.2.3 Method Statements: Additional Work 17
7.2.4 Work "required by the Project Specification" 17

STELLENBOSCH
STELLENBOSCH • PNIEL • FRANSCHHOEK
MUNISIPALITEIT • UMASIPALA • MUNICIPALITY

EMP-STANDARD SPECIFICATION

EM: ENVIRONMENTAL MANAGEMENT

1 SCOPE

This Specification details the requirements for controlling the impact of the construction activities related to the R310-R40 Intersection upgrades in Stellenbosch and surrounding developed environments. The aim is to promote the use of Best Practice Principals and Environmental Friendly Methods.

2 INTERPRETATIONS

2.1 Supporting Specifications

Where this Specification is required for a project the following specifications shall, inter alia, form part of the Contract Document.

(a) Project Specification;
(b) SABS standards

2.2 Application

This Specification contains clauses that are generally applicable to the undertaking of civil engineering works in areas where it is necessary to impose pro-active controls on the extent to which the construction activities impact on the environment. Interpretations and variations of this Specification are set out in Portion 2 of the Project Specification (see 2.1).

In the event of any difference or discrepancy between the provisions of the Standardized Specifications and the provisions of this Specification, the latter shall prevail.

2.3 Definitions.

For the purposes of this Specification the definitions and abbreviations given in the applicable specifications listed in 2.1 and the following definitions shall apply:

Environment means the surroundings within which humans exist and that are made up of:
i) the land, water and atmosphere of the earth;
ii) micro-organisms, plant and animal life;
iii) any part or combination of i) and ii) and the interrelationships among and between them; and
iv) the physical, chemical, aesthetic and cultural properties and conditions of the foregoing that influence human health and well-being.

Potentially hazardous substance is a substance that, in the reasonable opinion of the Employer's Agent, can have a deleterious effect on the environment.

Employer's Agent is the part of the project management team consisting of the consulting Engineers and the appointed Environmental Control Officer (ECO)

Method Statement: a written submission by the Contractor to the Employer's Agent in response to the Specification or a request by the Employer's Agent setting out the plant, materials, labour and method the Contractor proposes using to carry out an activity, identified by the relevant specification or the Employer's Agent when requesting the Method Statement, in such detail that the Employer's Agent is enabled to assess whether the Contractor's proposal is in accordance with the Specifications and/or will produce results in accordance with the Specifications.

The Method Statements shall cover applicable details with regard to:

- construction procedures,
- materials and equipment to be used,
- getting the equipment to and from site,
- how the equipment/ material will be moved while on site,
- how and where material will be stored,
- the containment (or action to be taken if containment is not possible) of leaks or spills of any liquid or material that may occur,
- timing and location of activities,
- compliance/ non-compliance with the Specifications and
- any other information deemed necessary by the Employer's Agent.

Reasonable means, unless the context indicates otherwise, reasonable in the opinion of the Employer's Agent after he has consulted with a person, not an employee of the Employer, suitably experienced in "environmental implementation plans" and "environmental management plans" (both as defined in Act No 107,1998).

Solid waste means all solid waste, including construction debris, chemical waste, excess cement/ concrete, wrapping materials, timber, tins and cans, drums, wire, nails, food and domestic waste (e.g. plastic packets and wrappers).

Contract means the General Conditions of Contract and Special Conditions, Specifications, Drawings, Tender, written records of matters agreed after the submission of the Contractor's tender, Letter of Acceptance and Agreement, together with other documents which the parties have agreed in writing shall form part of the Contract and such amendments or additions to the Contract as may be agreed in writing between the parties.

Contaminated water means water contaminated by the Contractor's activities, *e.g.* concrete water, runoff from plant/ personnel wash areas and waste water in drip trays and bunded areas.

Topmaterial means the top 150 mm of soil (topsoil) and root material of cleared vegetation.

3 MATERIALS

3.1 Materials handling, use and storage

The Contractor shall ensure that any delivery drivers are informed of all procedures and restrictions (including "no go" areas) required to comply with the Specifications. The Contractor shall ensure that these delivery drivers are supervised during off loading, by someone with an adequate understanding of the requirements of the Specifications.

Materials shall be appropriately secured to ensure safe passage between destinations. Loads including, but not limited to sand, stone chip, fine vegetation, refuse, paper and cement, shall have appropriate cover to prevent them spilling from the vehicle during transit. The Contractor shall be responsible for any clean-up resulting from the failure by his employees or suppliers to properly secure transported materials. All public or access roads adjacent to the construction area will be swept and kept clean of all construction related debris.

All manufactured and/ or imported material shall be stored within the Contractor's camp, and, if so required by the Project Specification, out of the rain. All lay down areas outside of the construction camp shall be subject to the Employer's Agent's approval, which shall not unreasonably be withheld. All material stockpile and laydown areas shall be demarcated.

3.2 Hazardous substances

Hazardous chemical substances (as defined in the Regulations for Hazardous Chemical Substances) used during construction shall be stored in appropriate secondary containers or constructed bund areas. The relevant Material Safety Data Sheets (MSDS) shall be available on Site. Procedures detailed in the MSDSs shall be followed in the event of an emergency situation.

Petroleum, chemicals, harmful and hazardous waste is to be stored in an enclosed and bunded area. This area shall be subject to the approval of the Employer's Agent. No storage will be permitted close to any waterbody. The waste shall be disposed of at a hazardous waste disposal site as approved by the Employer's Agent. Storage and disposal of waste is regulated through other legislation, which should be complied with *i.e.* the Occupational Health and Safety Act.

3.2.1 Shutter oil and curing compound

Shutter oil and curing compound pose a risk of causing water and soil contamination and accordingly are regarded as potential hazardous substances. The Contractor shall ensure that shutter oil and curing compound containers in use are stored within appropriate secondary containers or constructed bund areas. The remaining containers shall be inspected regularly to ensure that no leakage occurs. When shutter oil or curing compound is dispensed, the proper dispensing equipment shall be used, and the storage container shall not be tipped in order to dispense the oil/ compound. The dispensing mechanism of the shutter oil/ curing compound storage container shall be stored in a waterproof container when not in use.

Shutter oil and curing shall be used in moderation and shall be applied under controlled conditions using appropriate equipment. The Contractor shall take all reasonable precautions to prevent accidental and incidental spillage during the application of these compounds. No application will occur on bare or unprotected ground and ground cover sheets will be used.

In the event of a shutter oil or curing compound spill, the source of the spillage shall be isolated, and the spillage contained. The Contractor shall clean up the spill, either by removing the contaminated soil or by the application of absorbent material in the event of a larger spill. Treatment and remediation of the spill area shall be undertaken to the reasonable satisfaction of the Employer's Agent.

3.2.2 Bitumen/Prime

The Employer's Agent shall be advised of the area that the Contractor intends using for the storage of bitumen drums/ products. The storage area shall have a smooth impermeable (concrete or 250 µm plastic covered in sand) floor. The floor shall be bunded and sloped towards a sump to contain any spillages of substances. The bund shall be inspected and emptied daily, and serviced when necessary. The bund shall be closely monitored during rain events to ensure that it does not overflow.

4 PLANT

4.1 Ablution facilities

A sufficient number of chemical toilets shall be provided by the contractor in the construction camp area and at appropriate locations approved by the Employer's Agent. The ratio of ablution facilities to site staff should not exceed 1:20 and facilities shall be located within 100m from any point of work but no closer than 50 m to any water body or river. All temporary/ portable toilets shall be secured to the ground to prevent them from toppling due to wind or any other cause. All temporary/ portable toilets shall be screened if deemed required.

The toilets will be cleaned weekly or more frequent if deemed required. The Contractor shall ensure that no spillage occurs when the toilets are cleaned or emptied and that the contents are properly stored and removed from Site. Cleaning slips will be kept on site as proof. Discharge of waste from toilets into the environment and burial of waste is strictly prohibited.

Washing, whether of the person or of personal effects and acts of excretion and urination are strictly prohibited other than at the facilities provided.

4.2 Eating areas

The Contractor shall designate proper eating areas at each area of the site where work is taking place. The Contractor shall ensure that good housekeeping and waste control is maintained at all eating areas. All eating areas are to be covered in accordance with the requirements of the Occupational Health and Safety Act. The Contractor shall ensure that his employees do not consume meals anywhere other than within these eating areas.

4.3 Solid waste management

An integrated waste management approach is to the followed on Site, based on aspects of waste separation and minimisation (reduction, re-use and recycling of waste).The Contractor shall provide a sufficient number of weatherproof bins with lids on Site to store the solid waste produced on a daily basis. All waste bins shall be clearly marked for waste separation. Solid, non-hazardous waste shall be disposed of in the bins provided and no on-site burying, dumping or burning of any waste materials, vegetation, litter or refuse shall occur. Bins shall not be allowed to become overfull and shall be emptied a minimum of once daily. The waste may be temporarily stored on Site in a marked demarcated central waste area that is weatherproof and scavenger-proof, and which the Employer's Agent has approved. General waste will be stored separately from construction related waste and rubble. Waste skips should also be used on site should the volume/quantity of waste produced on site require it.

All solid waste shall be disposed of offsite at an approved landfill site. The Contractor shall supply the Employer's Agent with a certificate of disposal.

4.4 Contaminated water

The Contractor shall set up a contaminated water management system, which shall include collection facilities to be used to prevent pollution, as well as suitable methods of disposal of contaminated water. The Contractor shall prevent the discharge of water contaminated with any pollutants, such as soaps, detergent, cements, concrete, lime, chemicals, glues, solvents, paints and fuels, into the environment.

The Contractor shall notify the Employer's Agent immediately of any pollution incidents on Site. The Employer's Agent's approval will be required prior to the discharge of contaminated water to the Municipal sewer system.

All drip trays shall be fitted with end caps. All drip trays in use will be inspected and emptied daily. All contaminated liquid from drip trays will be decanted into sealed and clearly marked containers. All drip trays in use will be kept in good order, disused driptrays will be replaced when required. Drip trays shall be closely monitored during rain events to ensure that they do not overflow. Where possible, the Contractor shall ensure that equipment is covered so that rain water is excluded from the drip trays.

4.5 Site structures

All site establishment components (as well as equipment) shall be positioned to limit visual intrusion on neighbours and the size of area disturbed. The type and colour of roofing and cladding materials to the Contractor's temporary structures shall be selected to reduce reflection.

4.6 Noise control

Appropriate directional and intensity settings are to be maintained on all hooters and sirens, and the Contractor shall provide and use suitable and effective silencing devices for pneumatic tools and other plant such that the noise level in inhabited areas and dwellings adjacent to the work areas will not increase by more than 7 dB $(A)_{Leq\ 60}$ above residual background sound levels. Similarly in habituated areas adjacent to access roads maximum noise levels shall not exceed 60 dB$(A)_{Leq\ 60}$ and maximum sound pressure level of 70 dB(A).

Where excess noise generation is unavoidable, the Contractor shall, by means of barriers, effectively isolate the source of any such noise in order to comply with the said regulations. The Contractor shall restrict any of his operations that may result in undue noise disturbance to those communities and dwellings abutting the Site to the hours of 08:00 to 17:00 on weekdays and 08:00 to 14:00 on Saturdays. Unless otherwise approved and agreed to with the Employer's Agent. No work will be permitted on Sundays.

No amplified music shall be allowed on Site. The use of radios, tape recorders, compact disc players, television sets etc shall not be permitted unless the volume is kept sufficiently low as to avoid any intrusion on members of the public within range. The Contractor shall not use sound amplification equipment on Site unless in emergency situations.

4.7 Lights

The Contractor shall ensure that any lighting installed on the site for his activities does not interfere with road traffic or cause a reasonably avoidable disturbance to the surrounding community, other users of the area and the natural environment.

4.8 Fuel (petrol and diesel) and oil

Unless otherwise specified in the Project Specification, fuel may be stored on site in an area approved by the Employer's Agent. No fuel storage will be permitted closely to any waterbody, wetland or river. The Contractor shall ensure that all liquid fuels (petrol and diesel) are stored in tanks or containers with lids, which are kept firmly shut or in bowsers/carts.

The fuel tanks on site shall be housed in a specially constructed and waterproofed concrete and brick bund area. The volume inside the bund shall be 130% of the total capacity of all the storage tanks. The bund area shall also be fitted with a lined drainage sump with valve. Where possible the bund area shall be covered to protect it from rain. All spill liquid and contaminated water drained from the bund will be decanted into sealed and clearly marked containers. Provision shall be made for refueling at the fuel storage area, by protecting the soil with 250 µm plastic covered with a minimum of a 5 cm layer of sand or by using driptrays.

Fuel carts or bowsers parked on site, shall be positioned on a smooth impermeable surface (concrete or 250 µm plastic) with an earth bund (plastic must have a 5 cm layer of sand on top to prevent damage and perishing). The impermeable lining shall extend to the crest of the bund. All fuel tanks and bowsers/carts on site shall be inspected regularly to ensure proper working order.

If fuel is dispensed from 200 litre drums, only empty externally clean drums may be stored on the bare ground. All empty externally dirty drums shall be stored on an area where the ground has been protected. The proper dispensing equipment shall be used, and the drum shall not be tipped in order to dispense fuel. The dispensing mechanism of the fuel storage drum shall be stored in a waterproof container when not in use.

The Contractor shall prevent unauthorised access into the fuel storage area. No smoking shall be allowed within the vicinity of the fuel storage area. The Contractor shall ensure that there is adequate fire-fighting equipment at the fuel stores.

Where reasonably practical, plant shall be refuelled at the fuel storage area or at the workshop as applicable. If it is not reasonably practical then the surface under the refuelling area shall be protected against pollution to the reasonable satisfaction of the Employer's Agent prior to any refuelling activities. Drip trays are to be used at all times during refuelling. No refuelling will be permitted closely to any waterbody, wetland or river. The Contractor shall ensure that there is always a supply of absorbent material readily available to absorb/ breakdown and where possible be designed to encapsulate minor hydrocarbon spillage. The quantity of such materials shall be able to handle a minimum of 200 ℓ of hydrocarbon liquid spill. This material must be approved by the Employer's Agent prior to any refuelling or maintenance activities.

4.9 Workshop, equipment maintenance and storage

All vehicles and equipment shall be kept in good working order. Leaking plant and equipment shall be repaired immediately or removed from the Site. Where practical, all maintenance of equipment and vehicles on Site shall be performed off Site or in an established workshop. If it is necessary to do maintenance outside of a workshop area, the Contractor shall obtain the approval of the Employer's Agent prior to commencing activities. The Contractor shall ensure that in his workshop and other plant maintenance facilities, including those areas where, after obtaining the Employer's Agent's approval, the Contractor

carries out emergency plant maintenance, there is no contamination of the soil or vegetation. The workshop shall have a smooth impermeable floor. The floor shall be bunded and sloped towards an oil trap or sump to contain any spillages of substances (e.g. oil).

When servicing equipment on site, drip trays shall be used to collect the waste oil and other lubricants. Drip trays shall also be provided in construction areas for stationary plant (such as compressors) and for all "parked" plant (such as scrapers, loaders, vehicles). Drip trays shall be inspected and emptied daily. Drip trays shall be closely monitored during rain events to ensure that they do not overflow. Where practical, the Contractor shall ensure that equipment is covered so that rainwater is excluded from the drip trays.

All on site washing of plant and equipment shall be restricted to urgent or preventative maintenance requirements only. All other washing shall be undertaken off Site or in the workshop. The use of detergents for washing shall be restricted to low phosphate and nitrate containing, low sudsing-type detergents.

4.10 Dust

The Contractor shall take all reasonable measures to minimise the generation of dust as a result of construction activities to the satisfaction of the Employer's Agent. The Contractor's dust management planning should, as a minimum, take cognisance of the following:

- Speed limits for vehicles on unpaved roads and minimisation of haul distances.
- Measures to ensure that material loads are properly covered during transportation.
- Schedule for wheel cleaning and measures to clean up public roads that may be soiled by construction vehicles.
- Minimisation of the areas disturbed at any one time and protection of exposed soil against wind erosion, e.g. by dampening with water or covering with straw
- Location and treatment of material stockpiles taking into consideration prevailing wind directions and location of sensitive receptors (Stockpile management and control)
- Controlled blasting techniques to minimise dust and fly rock during blasting.
- Adherence to the dust loads and protective gear stipulated in the Occupational Health and Safety Act.
- Reporting mechanism and action plan in case of excessive wind and dust conditions.

A water tanker should be permanently available for the control of dust generation, and the Contractor shall ensure that the sprays do not generate excess run off. There possible Non- Potable water should be used for dust control.

During high wind conditions, the Contractor shall comply with the Employer's Agent's instructions regarding dust-damping measures. The Employer's Agent may request the temporary cessation of all construction activities where wind speeds are unacceptably high, and until such time as wind speeds return to acceptable levels.

As required by the Project Specification, the Contractors shall develop and implement a programme for the monitoring of dust fallout in areas where dust generation may be expected.

4.11 Accommodation of site staff

With the exception of the night watchmen, none of the Contractors staff shall be accommodated on Site overnight.

5 CONSTRUCTION

5.1 Method Statements

Any Method Statement required by the Employer's Agent, Specification EM or the Project Specification shall be produced within such reasonable time as the Employer's Agent shall specify or as required by Specification EM or the Project Specification. The Contractor shall not commence the activity until the Method Statement has been approved and shall, except in the case of emergency activities, allow a period of two weeks for approval of the Method Statement by the Employer's Agent. Such approval shall not unreasonably be withheld.

The Employer's Agent may require changes to a Method Statement if the proposal does not comply with the specification or if, in the reasonable opinion of the Employer's Agent, the proposal may result in, or carries a greater than reasonable risk of, damage to the environment in excess of that permitted by the Specifications. Approved Method Statements shall be readily available on the site and shall be communicated to all relevant personnel. The Contractor shall carry out the Works in accordance with the approved Method Statement. Approval of the Method Statement shall not absolve the Contractor from any of his obligations or responsibilities in terms of the Contract.

Method Statements that shall be provided by the Contractor within 14 days of receipt of the letter of acceptance and prior to the activity covered by the Method Statement being undertaken, include:

1. Location and structure of the fuel and other hazardous substance storage on site , including the type and volume of storage containers and the design and capacity of the bund areas.

2. Solid waste (refuse) control and removal of waste from the Site, including the number, type and location of rubbish bins, the manner and frequency with which the waste will be removed from site and the disposal site. Details regarding the integrated waste management approach to be followed on site, based on aspects of waste minimisation (reduction, re-use and recycling).

3. Contaminated water management system, including an indication of the source and volume of contaminated water and how this would be disposed of.

4. Dust control, including methods to prevent dust generation and methods to reduce dust where its generation is unavoidable.

5. Location and layout of the construction camp in the form of a plan showing offices, stores for fuels and explosives, vehicle parking, access point, equipment cleaning areas and staff toilet placement.

6. Location of proposed site access routes and proposed traffic safety measures.

7. Emergency procedures for fire, and accidental leaks and spillages of hazardous materials including:
   - who shall be notified in the event of an emergency, including contact numbers for the relevant local authority,
   - where and how any hazardous spills will be disposed off,
   - the size of spillage which the emergency procedures could contain,
   - location of all emergency equipment and an indication of how regularly the emergency equipment will be checked to ensure that it is working properly.

8. Location, layout and preparation of cement/ concrete batching facilities including the methods employed for the mixing of concrete and the management of runoff water from such areas. An indication shall be given of how concrete spoil will be minimised and cleared.

9. Method of undertaking earthworks, including spoil management, erosion, dust and noise controls.

10. Motivation and method for undertaking any construction related activities within a "no-go" area, including requisite emergency procedures. Unless need clearly motivated and proposed methodology exhibits clear focus on environmentally sensitive construction practice, no activity will be permitted within the defined "no-go" areas.

11. Method Statement outlining the extent of areas to be cleared, the method of clearing and relocation of fauna, and the preparation for site clearing so as to ensure minimisation of exposed areas.

12. Method Statement outlining the location and materials used to build the formalized braai facility. (if such a facility is deemed to be a requirement)

13. Method Statement outlining the use and maintenance of plant and equipment on site.

5.2 Environmental awareness training

Within seven days of the Commencement Date, the Contractor's site staff including foremen and site management staff shall attend an environmental awareness training course, of approximately 30min duration. The Contractor shall liaise with the Employer's Agent prior to the Commencement Date to fix a date and venue for the course. The Contractor shall provide

a suitable venue with facilities as required by the Project Specification, and ensure that the specified employees attend the course. No more than 20 people shall attend each course and the Contractor shall allow for sufficient sessions to train all personnel. Subsequent sessions shall be run for any new personnel or sub – contractors coming onto site.

The environmental awareness training course shall be held during normal working hours. The information presented at the course shall be communicated to the Contractors employees on the site, to any new employees coming onto site after the initial training course and to his suppliers. Provision should also be made for quarterly refreshers courses to be undertaken during the course of the Contract. The Contractor shall ensure that all attendees sign an attendance register, and shall provide the Employer's Agent with a copy of the attendance register the day after each course.

5.3 Construction personnel information posters

The Contractor shall erect and maintain information posters for the information of his employees depicting actions to be taken to ensure compliance with aspects of the Specifications. Such posters shall be supplied by the Employer's Agent and shall be erected at a location specified by the Employer's Agent.

5.4 Site clearance

Before the commencement of any site clearance of related activity the area will be inspected and screened for any fauna and flora to be removed. If required a full Search & Rescue operation will to be conducted. No site clearance or earthworks shall commence until the encountered fauna and fauna have been safely relocated.

The Contractor shall ensure that the clearance of vegetation is restricted to that required to facilitate the execution of the works. Site clearance shall occur in a planned manner, and cleared areas shall be stabilised as soon as possible. The detail of vegetation clearing shall be subject to the Employer's Agent's approval. All cleared vegetation shall either be mulched and mixed into the topsoil stockpiles or disposed of at an approved disposal site. The disposal of vegetation by burning is prohibited unless a legal burning permit is obtained. No burying of vegetation will be allowed on site.

The Contractor shall strip the topmaterial, which includes the top 150 mm of soil and root material of cleared vegetation, within the Working Areas, and this shall be stockpiled separately from subsoil for subsequent use during rehabilitation and revegetation. Topmaterial stockpiles shall be managed and monitored for any signs of runoff and compaction. Appropriate signage shall be erected to indentify topsoil stockpiles.

5.5 Site division

The Employer's Agent shall be advised of the area that the Contractor intends using for the Construction Camp. The Construction Camp shall occupy as small an area as possible, and no site establishment shall be allowed within 50 m of any watercourse or wetland unless otherwise approved by the Employer's Agent. The Construction Camp shall be fenced off to avoid "camp creep" The Contractor shall inform the Employer's Agent of the intended actions and programme for site establishment. The site layout shall be planned to facilitate ready access for deliveries, facilitate future works and to curtail any disturbance or security implications for neighbours.

5.6 Site demarcation

As required by the Project Specification, the Contractor shall erect and maintain permanent and/ or temporary fences of the type and in the locations directed by the Employer's Agent. Such fences shall, if so specified, be erected before undertaking designated activities.

5.7 "No go" areas

If so required by the Project Specification, certain areas shall be considered "no go" areas. The Contractor shall ensure that, insofar as he has the authority, no unauthorised entry, stockpiling, dumping or storage of equipment or materials shall be allowed within the demarcated "no go" areas.

"No go" areas shall be demarcated and fenced off in an approved method specified by the Employer's Agent. The Contractor shall maintain the fence or demarcation daily for the duration of the Contract.

5.8 Protection of natural features

The Contractor shall not deface, paint, damage or mark any natural features (e.g. rock formations) situated in or around the Site for survey or other purposes unless agreed beforehand with the Employer's Agent. Any features affected by the Contractor in contravention of this clause shall be restored/ rehabilitated to the satisfaction of the Employer's Agent.

The Contractor shall take reasonable precautions to prevent any person from removing or damaging any fossils, coins, articles of value or antiquity and structures and other remains of archaeological interest discovered on the Site, immediately upon discovery thereof and before removal. The Contractor shall inform the Employer's Agent immediately of such a discovery and carry out the Employer's Agents instructions for dealing therewith. All works within the vicinity of the discovery must cease immediately and the area shall be cordoned off until such time as the Employer's Agent authorises resumption of the works in writing.

The Contractor shall not permit his employees to make use of any natural water sources (e.g. springs, streams, rivers, open water bodies) for the purposes of swimming, personal washing and the washing of machinery or clothes.

5.9 Protection of flora and fauna

Except to the extent necessary for the carrying out of the Works, flora shall not be removed, damaged or disturbed nor shall any vegetation be planted without authorisation.

Trapping, poisoning and/ or shooting of animals is strictly forbidden. No domestic pets or livestock are permitted on Site.

Where the use of herbicides, pesticides and other poisonous substances has been specified, they shall be stored, handled and applied with due regard to their potential harmful effects.

5.10 Protection of archaeological and palaeontological remains

The Contractor shall take reasonable precautions to prevent any person from removing or damaging any fossils, coins, articles of value or antiquity and structures and other remains of archaeological interest discovered on the Site, immediately upon discovery thereof and before removal. The Contractor shall inform the Employer's Agent immediately of such a discovery and carry out the Employer's Agent s instructions for dealing therewith. All works within the vicinity of the discovery must cease immediately and the area shall be cordoned off until such time as the Employer's Agent authorises resumption of the works in writing.

The Employer's Agent will contact the relevant heritage authority.

5.11 Access routes/ haul roads

Access to the Construction camp and working areas shall utilise existing roads or tracks where possible. The Employer's Agent shall preapproved any temporary haul or access road to be constructed. Entry/ exit points onto public roads shall take cognisance of traffic safety. Traffic safety measures shall included appropriate signage and signalmen where relevant.

On the Site, and, if so required by the Project Specification, within such distance of the Site as may be stated, the Contractor shall control the movement of all vehicles and plant including that of his suppliers so that they remain on designated routes, are distributed so as not to cause an undue concentration of traffic and that all relevant laws are complied with. In addition such vehicles and plant shall be so routed and operated as to minimise disruption to regular users of the routes not on the Site. On gravel or earth roads on Site and within 500m of the Site, the vehicles of the Contractor and his suppliers shall not exceed the specified site speed limit.

Mud and sand deposited onto public roads by construction activities shall be cleared on a daily basis.

5.12 Cement and concrete batching

Where applicable, the location of the batching plant (including the location of cement stores, sand and aggregate stockpiles) will be approved by the Employer's Agent. The concrete/cement batching plant shall be kept neat and clean at all times.

No batching activities shall occur directly on unprotected ground. All infield or small volume mixing will occur on dagha or well constructed mixing boards. The batching plant shall be located on a smooth impermeable surface (concrete or 250 µm plastic covered with 5 cm of sand). The area shall be bunded and sloped towards a sump to contain spillages of substances. All wastewater resulting from batching of concrete shall be disposed of via the contaminated water management system and shall not be discharged into the environment. Where possible, wastewater shall be re-used during the batching process. Contaminated water storage areas shall not be allowed to overflow and appropriate protection from rain and flooding shall be implemented.

Empty cement bags shall be stored separately from general waste in weatherproof containers to prevent windblown cement dust and water contamination. Empty cement bags shall be disposed of on a regular basis via the solid waste management system, and shall not be used for any other purpose. Unused cement bags shall be stored so as not to be affected by rain or runoff events. In this regard, closed steel containers should be used for the storage of cement powder and any additives. The Contractor shall ensure that sand, aggregate, cement or additives used during the mixing process are contained and covered to prevent contamination of the surrounding environment.

The Contractor shall take all reasonable measures to prevent the spillage of cement/ concrete and kerb mix during batching and construction operations. During pouring, the soil surface shall be protected using plastic and all visible remains of concrete shall be physically removed on completion of the cement/ concrete pour and appropriately disposed of. All spoiled and excess aggregate/ cement/ concrete shall be removed and disposed of via the solid waste management system.

Where "readymix" concrete is used, the Contractor shall ensure that the delivery vehicles do not wash their chutes directly onto the ground. Any spillage resulting from the "readymix" delivery shall be immediately cleared and disposed of via the solid waste management system.

5.13 Earthworks

All earthworks shall be undertaken in such a manner so as to minimise the extent of any impacts caused by such activities, particularly with regards to erosion and dust generation. No equipment associated with earthworks shall be allowed outside of the Site and defined access routes unless expressly permitted by the Employer's Agent.

5.14 Pumping

Pumps shall be placed over a drip tray in order to contain fuel spills and leaks. The Contractor shall take all reasonable precautions to prevent spillage during the refuelling of these pumps.

The Contractor shall ensure that none of the water pumped during any dewatering activities, including well points, is released into the environment without the Employer's Agent's approval. The Employer's Agent's approval will be required prior to the discharge of this water into the Municipal sewer system.

5.15 Bitumen /Prime

Bitumen storage on site will be undertaken a per agreed storage method approved by the Employer's Agent. All open, contaminated or half used drums or bitumen and prime will be stored in a constructed bund area.

Over spray of bitumen products outside of the road surface and onto roadside vegetation or the surrounding environment shall be prevented using a method approved by the Employer's Agent.

When heating bitumen products, the Contractor shall take cognisance of appropriate fire risk controls. Heating of bitumen products shall only be undertaken using LPG or similar zero emission fuels and appropriate fire fighting equipment shall be readily available. Stone chip / gravel excess shall not be left on road / paved area verges. This shall be swept / raked into

piles and removed to an area approved by the Employer's Agent. Water quality from runoff from new/ fresh bitumen surfaces will be monitored by the Employer's Agent and remedial actions taken where necessary.

5.16 Fire control

Smoking shall not be permitted in those areas where it is a fire hazard. Such areas shall include the workshop and fuel storage areas and any areas where the vegetation or other material is such as to make liable the rapid spread of an initial flame. In terms of the Atmospheric Pollution Prevention Act burning is not permitted as a disposal method. For construction works shorter than two (2) weeks, fires can be made in half-drums within the construction camp in an area totally cleared from vegetation. The drums must have sand (0.5 m high) completely surrounding the half-drum. For construction works that will occur for more than two (2) weeks, a more formalised braai facility should be constructed.

Fires may be permitted on site on condition that:

- Depending on the length of the contract, fires be made in half-drums or in the built braai facility.
- Should it be required that drums be cut in half on site, a risk assessment regarding the purging of the drum of any flammable substance and safe use of angle grinders must be included in the Health and Safety file.
- Fires must be strictly controlled and their location approved by the Employer's Agent.
- The Method Statement relating to having fires on site must be completed by the Contractor and signed by the ECO and Employer's Agent.
- Risks associated with fires during the Summer months (i.e. hot, dry, windy months) must be considered in the Method Statement. Extra caution must be made during Summer. During high winds, fires on site are prohibited.
- For contracts longer than two (2) weeks, a standard brick and concrete braai facility must be constructed within which fires are to be made. Its location must be approved by the Employer's Agent.
- The location of the formalised braai facility must be at least 10m away from the fuel storage area.
- No fuel will be left/ stored within 10m of the braai facility.
- Where possible, combustible materials must not accumulate unnecessarily on site,
- Suitable and sufficient fire extinguishing equipment must be placed at strategic locations within the construction camp and must be kept within 5 m of the braai facility/ half-drum container. It must be ensured that such equipment be kept in good working order.
- Fire equipment must be inspected by a competent person who has been appointed in writing.
- A sufficient number of workers must be trained in the use of fire-extinguishing equipment, especially the night watchman.
- A 5 litre bucket of sand must be kept within 5 m of the braai facility/ half-drum container.
- Smoking shall not be permitted in those areas where it is a fire hazard.
- Braai tongs or similar suitable tools as well as heat-proof gloves to handle hot coals and cooking equipment respectively must be made available.
- No flammable liquids must be used to light the fire.
- The required first aid box containing suitable equipment for burns must be kept on site.

The Contractor shall appoint a Fire Officer/Marshal who shall be responsible for ensuring immediate and appropriate actions in the event of a fire and shall ensure that employees are aware of the procedure to be followed. The Contractor shall forward the name of the Fire Officer to the Employer's Agent for his approval. The Contractor shall ensure that there is adequate basic fire-fighting equipment available on Site at all times. This shall include at least rubber beaters when working in urban open spaces and fynbos areas, and at least one fire extinguisher of the appropriate type when welding or other "hot" activities are undertaken.

5.17 Emergency procedures

The Contractor's procedures for the following emergencies shall include:

i) Fire

The Contractor shall advise the relevant authority of a fire as soon as one starts and shall not wait until he can no longer control it. The Contractor shall ensure that his employees are aware of the procedure to be followed in the event of a fire.

ii) Accidental leaks and spillages

The Contractor shall ensure that his employees are aware of the emergency procedure(s) to be followed for dealing with spills and leaks, which shall include notifying the Employer's Agent and the relevant authorities. The Contractor shall ensure that the necessary materials and equipment for dealing with spills and leaks is available on Site at all times. Treatment and remediation of the spill areas shall be undertaken to the reasonable satisfaction of the Employer's Agent.

In the event of a hydrocarbon spill, the source of the spillage shall be isolated, and the spillage contained. The area shall be cordoned off and secured. The Contractor shall ensure that there is always a supply of absorbent material readily available to absorb/ breakdown and where possible be designed to encapsulate minor hydrocarbon spillage. The quantity of such materials shall be able to handle a minimum of 200 ℓ of hydrocarbon liquid spill.

5.18 Safety

Telephone numbers of emergency services, including the local fire fighting service, shall be posted conspicuously in the Contractor's office near the telephone.

No unauthorised firearms are permitted on Site.

5.19 Community relations

The Contractor shall erect and maintain information boards in the position, quantity, design and dimensions specified. Such boards shall include contact details for complaints by members of the public in accordance with details provided by the Employer's Agent.

The Contractor shall keep a "Complaints Register" on Site. The Register shall contain all contact details of the person who made the complaint, and information regarding the complaint itself and any action to be taken.

5.20 Erosion and sedimentation control

The Contractor shall take all reasonable measures to limit erosion and sedimentation due to the construction activities. Where erosion and/or sedimentation, whether on or off the Site, occurs despite the Contractor complying with the foregoing, rectification shall be carried out in accordance with details specified by the Employer's Agent. Where erosion and/or sedimentation occur due to the fault of the Contractor, rectification shall be carried out to the reasonable requirements of the Employer's Agent.

Any runnels or erosion channels developed during the construction period or during the maintenance period shall be backfilled and compacted. Stabilisation of cleared areas to prevent and control erosion shall be actively managed. Consideration and provision shall be made for various methods, namely, brushcut packing, mulch or chip cover, straw stabilising (at a rate of one bale/square metre and rotovated into the top 100 mm of the completed earthworks), watering, soil binders and anti erosion compounds, mechanical cover or packing structures (e.g. Hessian cover or Soil Saver products).

Traffic and movement over stabilised areas shall be restricted and controlled, and damage to stabilised area shall be repaired and maintained to the satisfaction of the Employer's Agent.

5.21 Aesthetics

The Contractor shall take reasonable measures to ensure that construction activities do not have an unreasonable impact on the aesthetics of the area. The Contractor shall ensure that the construction camp and working area is kept neat and tidy at all times. All aspects relating to maintaining good housekeeping standards on site will be addressed daily.

5.22 Recreation

If so required by the Project Specification, the Contractor shall take measures to reduce disruption to recreational users of the area abutting the Site.

5.23 Access to site

The Contractor shall ensure that access to the Site and associated infrastructure and equipment is off-limits to the public at all times during construction. If so required, as directed by the Employer's Agent, the contractor shall fence the site to ensure effective control of access to the site. This fence shall be a diamond mesh fence or similar with a minimum height specified by the Employer's Agent and it shall be erected around the site and shall be maintained for the duration of the contract.

5.24 Crane operations

Drive plants shall be well maintained and drip trays shall be positioned at potential leak areas. Over-greasing of crane cables shall be avoided.
Movement and lifting of hazardous materials shall be undertaken such that they do not cause a pollution, spillage or safety risk (in particular were concrete buckets are in use).

5.25 Trenching

Trenching for services shall be undertaken in accordance with the engineering specifications (SABS 1200DB) with the following environmental amplifications, where applicable:

a) Soil shall be excavated and used for refilling trenches i.e. soil from the first trench shall be excavated and stockpiled, thereafter soil from the second excavated trench length shall be used to backfill the trench behind it once the services have been laid. The last trench shall be filled using the soil stockpiled from the first trench.
b) Trench lengths shall be kept as short as practically possible before backfilling and compacting.
c) Trenches shall be re-filled to the same level as (or slightly higher to allow for settlement) the surrounding land surface to minimise erosion.

5.26 Demolition

Hazardous building materials, including asbestos shall be identified prior to demolition of any buildings and dealt with in accordance with the safety and health legislation. A Method Statement, outlining the proposed approach to the disposal of these materials, must be supplied for approval by the Employer's Agent.

Hazardous and non-hazardous materials shall be separated at site and disposed of in a manner approved by the Employer's Agent.

All buildings older than 60 years require a permit from South African Heritage Resources Agency in terms of the National Heritage Resources Act (no. 25 of 1999).A demolition permit is also required from the local authority in terms of the National Building Regulations {

5.27 Drilling and jack hammering

The Contractor shall take all reasonable measures to limit dust generation and noise as a result of drilling operations. The Contractor shall ensure that no pollution results from drilling operations, either as a result of oil and fuel drips, or from drilling fluid.

Any areas or structures damaged by the drilling and associated activities shall be rehabilitated by the Contractor to the satisfaction of the Employer's Agent.

f) Water used for the irrigation of vegetated areas shall be free of pollutants that will have a detrimental effect on the plants. The vegetated area shall only be watered once, immediately following seeding. Watering should be carried out from a tanker, using a fine nozzle spray to avoid erosion and disturbance of the vegetation. Water for irrigation purposes may be drawn from any water body.

No construction equipment, vehicles or unauthorised personnel shall be allowed onto areas that have been vegetated. Only persons or equipment required for the preparation of areas, application of fertiliser and maintenance of re-vegetated area shall be allowed to operate on these areas.

5.31 Public Access to site

The Contractor shall ensure that access to the Site and associated infrastructure and equipment is off-limits to the public at all times during construction. If so required, to ensure effective control of access to the site, the contractor shall fence off the site. The height of the fence shall be a specified by the Employer's Agent and shall be erected around the site and maintained for the duration of the contract.

The Contractor shall ensure traffic safety at all times and shall implement safety measures to this end. General and personal traffic safety is the responsibility of the individual.

5.32 Temporary site closure

If the site is closed for a period exceeding one week, the contractor, in consultation with the Employer's Agent shall carry out the following checklist procedure.

5.32.1 Hazardous materials stores

a) Outlet secure/ locked
b) Bund empty (where applicable)
c) Fire extinguishers serviced and accessible
d) Secure area from accidental damage e.g. vehicle collision
e) Emergency and contact details displayed
f) Adequate ventilation

5.32.2 Safety

a) All trenches and manholes secured
b) Fencing and barriers in place as per the Occupational Health and Safety Act (No 85 of 1193)
c) Emergency and Management contact details displayed
d) Pipe stockpile wedged/ secured

5.32.3 Erosion

a) Wind and dust mitigation in place
b) Slopes and stockpiles at stable angle
c) Revegetated areas watering schedules and supply secured

5.32.4 Water contamination and pollution

a) Cement and materials stores secured
b) Toilets empty and secured
c) Refuse bins empty and secured
d) Drip trays empty and secure (where possible)
e) Structures vulnerable to high winds secure

6 TOLERANCES

Environmental management is concerned not only with the final results of the Contractor's operations to carry out the Works but also with the control of how those operations are carried out. Tolerance with respect to environmental matters applies not only to the finished product but also to the standard of the day-to-day operations required to complete the Works.

It is thus required that the Contractor shall comply with the environmental requirements on an ongoing basis and any failure on his part to do so will entitle the Employer's Agent to certify the imposition of a penalty as detailed below.

6.1 Penalties

Prior to the issuing of penalties, one verbal and one written warning is required by the Environmental Control Officer or the Employer's Agent. Repeat offences relating to non-compliance will result in immediate fining. Penalties will be issued for the transgressions listed below. Penalties may be issued per incident at the discretion of the Employer's Agent. Such penalties will be issued in addition to any remedial costs incurred as a result of non-compliance with the environmental specifications. The Employer's Agent will inform the Contractor of the contravention and the amount of the penalty, and will deduct the amount from monies due under the Contract.

Penalties for the activities detailed below, will be imposed by the Employer's Agent on the Contractor and/or his Sub-contractors.

a)	Commencement of work without the required approvals in place. Employees, vehicles, plant, or thing related to the Contractor's operations operating within the designated boundaries of a "no-go" area.	R 15 000
b)	Any vehicle driving in excess of designated speed limits.	R 1 000
c)	Persistent and un-repaired oil leaks from machinery.	R 5 000
d)	Failure to use drip trays on site.	R 3 000
e)	Persistent failure to monitor and empty drip trays timeously.	R 3 000
f)	The use of inappropriate methods for refuelling.	R 5 000
g)	Litter/ pollution on site associated with construction activities.	R 3 000
h)	Deliberate lighting of illegal fires on site (not in formalised area approved by the Employer's Agent).	R 5 000
i)	Any employee eating meals on site, outside of the defined eating area.	R 1 000
j)	Employees not making use of the site ablution facilities.	R 2 000
k)	Failure to implement specified noise controls	R 3 000
l)	Failure to empty waste bins on a regular basis and maintain good housekeeping	R 3 000
m)	Inadequate dust control	R 5 000
n)	Failure to batch cement or concrete on an impermeable surface.	R 3 000
o)	Illegal dumping of any waste or rubble	R 15 000
p)	Burning of any waste or litter on site	R 5 000
q)	Failure to sweep and keep adjacent public roads cleaning	R 3 000
r)	Water wastage and irresponsible water use on site	R 3 000
s)	Failure to store hazardous substances in the correct and approved manner	R 5 000
t)	A spillage, pollution, fire or any damage to River or wetland system resulting from negligence on the part of the Contractor	R 50 000

For each subsequent similar offence the penalty shall be doubled in value to a maximum value of R 100 000.

The Employer's Agent shall be the judge as to what constitutes a transgression in terms of this clause, subject to the provisions of Clause 10.2.1 of the General Conditions of Contract. In the event that transgressions continue the Contractor's attention is drawn to the provisions of Sub-clause 9.2.1.3 of the General Conditions of Contract under which the Employer's Agent may cancel the Contract (GCC, 3rd Edition, 2015).

6.2 Removal from site and suspension of Works

The Employer's Agent may instruct the Contractor to remove from Site any person(s) who in their opinion is guilty of misconduct, or is incompetent, negligent or constitutes an undesirable presence on Site. Subclause 4.9 of this Specification requires that all Plant be in good working order, and accordingly the Employer's Agent may order that any Plant not complying with the Specifications be removed from Site. Where the Employer's Agent deems the Contractor to be in breach of any of the requirements of this Specification, he may order the Contractor to suspend the progress of the Works or any part thereof.

7 MEASUREMENT AND PAYMENT

7.1 Basic principles

Except as noted below and in PSEM8 as Scheduled Items, no separate measurement and payment will be made to cover the costs of complying with the provisions of this specification and such costs shall be deemed to be covered by the rates tendered for the items in the Schedule of Quantities completed by the Contractor when submitting his tender.

7.2 Scheduled items

7.2.1 All requirements of the environmental management specification

All work not measured elsewhere, associated with complying with any requirement of the environmental management specification shall be measured as a sum. The tendered rate shall cover any cost associated with complying with the environmental management specification and shall include for all materials, labour and plant required to execute and complete the work as specified, described in the Schedule of Quantities or shown on the drawing(s).

7.2.2 Provision of venue and staff attendance at the environmental awareness training course

The provision of a venue and staff attendance at the environmental training course will be measured as a lump sum.

The sum shall cover all costs incurred by the Contractor in providing the venue and facilities and in ensuring the attendance of his site management staff, including foreman, at the meeting.

7.2.3 Method Statements: Additional Work

No separate measurement and payment will be made for the provision of Method Statements but, where the Employer's Agent requires a change on the basis of his opinion that the proposal may result in, or carries a greater than warranted risk of damage to the environment in excess of that warranted by the Specifications, then any additional work required, provided it could not reasonably have been foreseen by an experienced contractor, shall be valued in accordance with GCC 2015 Clause 6.4.

A stated sum is provided in the Schedule of Quantities to cover payment for such additional work.

7.2.4 Work "required by the Project Specification"

Where a clause in this Specification includes a requirement as "required by the Project Specification", measurement and payment for compliance with that requirement shall be in accordance with the relevant measurement and payment clause of the Project Specification.

STELLENBOSCH
STELLENBOSCH • PNIEL • FRANSCHHOEK
MUNISIPALITEIT • UMASIPALA • MUNICIPALITY

ANNEXURE 5

General Occupational Health and Safety Provisions

(a) Legal Requirements

A principal contractor shall, as a minimum, comply with:

(i) The Occupational Health and Safety Act and Regulations (Act 85 of 1993)
(ii) The Compensation for Occupational Injuries and Diseases Act (Act 130 of 1993

(b) Risk Assessment

Every principal contractor performing construction work shall, before the commencement of any construction work or work associated with the aforesaid construction work and during such work, cause a risk assessment to be performed by a competent person, appointed in writing, and the risk assessment shall form part of the OH&S plan and be implemented and maintained. The principal contractor shall conduct a baseline risk assessment, before work commences.

The risk assessment shall further include, where applicable, the standard working procedures and the applicable method statements. This does not imply that all possible risk assessments must be attended to before work commences, but that all relevant risk assessments receive the necessary attention as the Project progresses.

Based on the risk assessments, the principal contractor shall develop a set of site-specific OH&S rules that shall be applied to regulate the OH&S aspects of the construction. The risk assessments, together with the site-specific OH&S rules shall be submitted to the Employer before construction on site commences.

The risk assessment shall include, as far as is reasonably practicable, at least:

(i) the identification of the risks and hazards to which persons may be exposed
(ii) the analysis and evaluation of the risks and hazards identified, inclusive of a residual risk rating methodology. The method used shall not be prescribed.
(iii) a documented plan of safe work procedures, to mitigate, reduce or control those residual risks that have been identified as unacceptably high, by means of the rating system.
(iv) a monitoring plan and
(v) a review plan, inclusive of dates to be adhered to.

All variations to the scope of work shall similarly be subjected to a risk assessment process.

The principal contractor shall review the risk assessments and standard working procedures regularly as the contract work develops and progresses and each time changes are made to the designs, plans and construction methods and processes. The principal contractor shall provide the Employer, other contractors and all other concerned parties with copies of any changes, alterations or amendments

(c) Structure and Responsibilities

(i) Overall Supervision and Responsibility for OH&S
It is a requirement that the principal contractor, when he appoints contractors in terms of Construction Regulations, includes in his agreement with such contractors the following:

(1) OH&S Act (85 of 1993), Section 37(2) agreement: “Agreement with Mandatory”
(2) OH&S Act (85 of 1993), Section 16(2) appointee/s as detailed in his/her/their respective appointment forms. (Where applicable)

(ii) Specific Supervision Responsibilities for OH&S
The contractor shall appoint designated competent employees and/or other competent persons as required by the Act and Regulations. It is a requirement that where the Construction Regulations stipulate “competence” in an appointment, the contractor shall provide a form of evidence, proving this competence. This proof of evidence will be negotiated between both parties as per the Construction Regulations.

Where the principal contractor employs more than 20 persons (including the employees of other contractors (subcontractors) he has to appoint one OH&S representatives for every 50 employees or part thereof. This is a minimum (legal) requirement in terms of section 17 of the OH&S Act. The principle contractor may at his own discretion cause more OH&S Representatives to be appointed according to site specific requirements.

In terms of section 18 of the OH&S Act, OH&S representatives shall be designated in writing and the designation

shall include the area of responsibility of the person and term of the designation. OH&S representatives must be experienced, permanently employed, trained and able to move freely at their designated area of responsibility.

The principal contractor shall ensure that the designated OH&S representatives conduct continuous monitoring

and regular inspections of their respective areas of responsibility, focusing on unsafe acts and unsafe conditions and report thereon to the principal contractor. OH&S representatives shall be included in accident or incident investigations. OH&S representatives shall attend all OH&S committee meetings.

(iii) Appointment of OH&S Committee
The principal contractor shall in terms of sections 19 and 20 of the OH&S Act, establish an OH&S committee, which shall meet once a month or sooner, should circumstances require an extraordinary meeting.

(d) Administrative Controls

Site specific Health and Safety Plan
In compliance with the Construction Regulations the contractor shall, after performing a risk assessment, prepare a health and safety plan for approval by the employer.

The health and safety plan shall include, but not be limited to, the following:
(1) The safety management structure including the names of all designated persons such as the construction supervisor and any other competent persons;
(2) Safety method statements and procedures to be adopted to ensure compliance with the OHS Act. Aspects to be dealt with shall include:
(3) Public vehicular and pedestrian traffic accommodation measures;
(4) Control of the movement of construction vehicles;
(5) The storage and use of materials;
(6) The use of tools, vehicles and plant;
(7) Temporary support structures;
(8) Dealing with working at height;
(9) The use of batch plants;
(10) Excavation work;
(11) Demolition work;
(12) Security, access control and the exclusion of unauthorised persons.
(13) The provision and use of temporary services;
(14) Compliance with wayleaves, permissions and permits;
(15) Safety equipment, devices and clothing to be employed;
(16) Emergency procedures;
(17) Provision of welfare facilities;
(18) Induction and training;
(19) Provision and maintenance of the health and safety file and other documentation;
(20) Arrangements for monitoring and control to ensure compliance with the safety plan.

Health and Safety Records
As required by the Construction Regulations, the principal contractor and other contractors shall each keep an OH&S file on site. The OH&S file is a term for the SHE Management System utilised on site, which may include copies of relevant documentation.

The following index is neither exhaustive nor prescriptive and shall only be used as a guide:
• Notification of construction work (Construction Regulation 3) where applicable
• Latest copy of OH&S Act (General Administrative Regulation 4)
• Proof of registration and good standing with COID Insurer (Construction Regulation 4(g)
• OH&S plan agreed with the Client including the underpinning risk assessment/s and method statements (Construction regulation 5(1))
• Copies of OH&S committee and other relevant minutes
• Designs/drawings (Construction Regulation 5(8)
• A list of contractors (subcontractors) including copies of the agreements between the parties and the type of work being done by each contractor (Construction Regulation 9)
• Appointment/designation forms as per paragraphs 2.1.1 and 2.1.2.
• Registers as follows:
- Accident/Incident registers (Annexure 1 of the General Administrative Regulations)
- OH&S representatives' inspection register
- Asbestos demolition and stripping register
- Batch plant inspections

- Construction vehicles and mobile plant inspections by controller
- Daily inspection of vehicles, plant and other equipment by the operator/driver/user
- Demolition inspection register
- Designer's inspection of structures record
- Electrical installations, -equipment and -appliances (including portable electrical tools)
- Excavations inspection
- Explosive powered tool inspection, maintenance, issue and returns register (incl. cartridges and nails)
- Fall protection inspection register
- First aid box contents
- Fire equipment inspection and maintenance
- Formwork and support work inspections
- Hazardous chemical substances record
- Ladder inspections
- Lifting equipment register
- Materials hoist inspection register
- Machinery safety inspection register (incl. machine guards, lock-outs etc.)
- Scaffolding inspections
- Stacking and storage inspection
- Inspection of structures
- Inspection of suspended platforms
- Inspection of tunnelling operations
- Inspection of vessels under pressure
- Welding equipment inspections
- Inspection of work conducted on or near water
- Welfare facilities as provided

OHS Audits and Inspections

The employer will conduct monthly audits to comply with Construction Regulations in order to ensure that the principal contractor has implemented and is maintaining the agreed and approved OH&S plan. The employer reserves the right to conduct other ad hoc audits and inspections as deemed necessary. This will include site safety walks.

The principal contractor may conduct his own regular internal audits to verify compliance with his own OH&S management system, as well as with this specification. The principal contractor shall furthermore ensure that each contractor`s health & safety plan is being implemented by conducting periodic audits at intervals mutually agreed upon between upon by the principal contractor and the contractor, but at least once per month.

OH&S representatives shall conduct weekly inspections of their areas of responsibility and report thereon to their foreman or supervisor whilst other appointees shall conduct inspections and report thereon as specified in their appointments e.g. vehicle, plant and machinery drivers, operators and users must conduct daily inspections before start-up.

All the results of the abovementioned inspections and audits shall be in writing, reviewed at OH&S committee meetings, endorsed by the chairman of the meeting and placed on the OH&S File.

Accidents and Incident Investigations

The principal contractor, with the assistance of appointed Contractors if required, shall insure that the investigation of all accidents/incidents where employees and non-employees were injured to the extent that he/she/they had to be referred for medical treatment by a doctor, hospital or clinic, take place. The results of the investigation shall be entered into an accident/incident register.

The affected contractor shall be responsible for the investigation of all minor and non-injury incidents as described in Section 24(1)(b) & (c) of the Act and keeping a record of the results of such investigations including the steps taken to prevent similar accidents in future.

The principal contractor shall provide the Employer with copies of all statutory reports required in terms of the Act within 7 days of the incident occurring.

Notification of Construction Work

The principal contractor shall, where the contract meets the requirements laid down in Construction Regulations, prior to commencement of the works, notify the Department of Labour of the intention to carry out construction work and use the form (Annexure A in the Construction Regulations) for the purpose. A copy shall be kept on the OH&S file and a copy shall be forwarded to the employer for record keeping purposes.

Training and Competence

The training required by the Act and Regulations shall be included in the principal contractor's OH&S plan. The principal contractor shall be responsible for ensuring that all relevant training is undertaken. Only accredited Training providers shall be used for OH&S. The principal contractor shall ensure that their and other contractors' personnel appointed are competent and that all training required for doing the work safely and without risk to health, has been completed before work commences. The principal contractor shall ensure that follow-up and refresher training is conducted as the contract work progresses and the work situation changes. This does not absolve any contractors from their responsibilities as Employers. Records of all training must be kept on the OH&S file for auditing purposes.

Consultations, Communication and Liaison
OH&S liaison between the employer, principal contractor, other contractors, designer and other concerned parties will be through the OH&S committee as contemplated. In addition to this, communication may be directly to the client or his appointed agent, verbally or in writing, as and when the need arises.

Consultation with the workforce on OH&S matters will be through their supervisors, OH&S representatives and the OH&S committee. The principal contractor shall be responsible for the dissemination of all relevant OH&S information to the other contractors e.g. design changes agreed with the client and the designer, instructions by the client and/or his/her agent, exchange of information between contractors, the reporting of hazardous/dangerous conditions/situations etc. The principal contractors' most senior manager on site shall be required to attend all OH&S meetings.

OPERATIONAL CONTROL

(a) Operational Procedures

Each construction activity shall be assessed by the principal contractor so as to identify operational procedures that will mitigate against the occurrence of an incident during the execution of each activity. This specification requires the principal contractor:

(i) to be conversant with all relevant Regulations
(ii) to comply with their provisions
(ii) to include them in his OH&S plan where relevant.

(b) Emergency Procedures

In conjunction with the identification of operational procedures, the principal contractor shall similarly identify and formulate emergency procedures in the event an incident does occur. The emergency procedures thus identified shall also be included in the principal contractor's OH&S plan, and communicated as part of induction training. It is the responsibility of the First Aid Worker, together with the Construction Supervisor, to make an assessment regarding the severity of injuries and which actions are appropriate. For example: transfer to a medical facility by ambulance or helicopter.

(c) Personal & Other Protective Equipment (Sections 8/15/23 of the OH&S Act)

The contractor shall identify the hazards in the workplace and deal with them. He must either remove them or, where impracticable, take steps to protect workers and make it possible for them to work safely and without risk to health under the hazardous conditions.

Personal protective equipment (PPE) should, however, be the last resort and there should always first be an attempt to apply engineering and other solutions to mitigating hazardous situations before the issuing of PPE is considered.

Where it is not possible to create an absolutely safe and healthy workplace the contractor shall inform employees regarding this and issue, free of charge, suitable equipment to protect them from any hazards being present and that allows them to work safely and without risk to health in the hazardous environment.

It is a further requirement that the contractor maintain the said equipment, that he instructs and trains the employees in the use of the equipment and ensures that the prescribed equipment is used by the employee/s.

Employees do not have the right to refuse to use/wear the equipment prescribed by the employer and, if it is impossible for an employee to use or wear prescribed protective equipment through health or any other reason, the employee cannot be allowed to continue working under the hazardous condition/s for which the equipment was prescribed but an alternative solution has to be found that may include relocating or discharging the employee.

The principal contractor shall include in his OH&S plan the PPE he intends issuing to his employees for use during construction and the sanctions he intends to apply in cases of non-conformance by his employees. Conformance to the wearing of PPE shall be discussed at the weekly inspection meetings.

(d) Other Regulations

Wherever in the Construction Regulations or this specification there is reference to other regulations (e.g. Construction Regulation 22: Electrical Installations and Machinery on Construction Sites) the principal contractor shall be conversant with and shall comply with these regulations.

(e) Public Health & Safety (Section 9 of the OH&S Act)

The principal contractor shall, as far as is reasonably practicable, be responsible for ensuring that non-employees affected by the construction work are made aware of the dangers likely to arise from said construction work as well as the precautionary measures to be observed to avoid or minimise those dangers.

This includes:
(i) Non- employees entering the site for whatever reason
(ii) The surrounding community
(iii) Passers-by to the site

PROJECT SPECIFIC REQUIREMENTS

The following site-specific requirements are applicable to this project.

(a) General
The temporary and permanent works required under this contract are described in the various volumes forming part of this contract. The contractor, in complying with the OHS Act and the Construction Regulations, shall consider all aspects of the works described and consider the construction methods and materials to be used.

Design information provided for safety planning purposes, such as design loads for structures, foundation conditions etc, is provided on the drawings, in the project specifications or in other volumes forming part of this contract.

Environmental conditions and requirements particular to this contract are indicated in the Project Specification.

(b) Site access, egress, deliveries and vehicular and pedestrian routes
The requirements regarding the control of access to and egress from the Site and vehicular and pedestrian routes are indicated in the Project and Standard Specifications and in particular in Section 1500.

(c) Existing Conditions
The contractor shall consider; inter alia, the following existing conditions when complying with the OHS Act:

(i) Existing utility services;
(ii) Existing ground and foundation conditions;
(iii) Traffic accommodation requirements;
(iv) Surrounding land use;
(v) Anticipated weather conditions.

(**d) Wayleaves, permissions and permits**
The contractor shall be responsible for obtaining all the wayleaves, permissions or permits applicable to working near any existing services or other infrastructure on Site and shall abide by the safety conditions imposed by such wayleaves, permissions or permits.

(e) Risk Assessments
The Contractor must ensure that the risk assessment involves identifying the hazards present in a work activity on site. This is followed by an evaluation of the extent of the risk involved considering those precautions already being taken.

The following general principle should be followed when conducting a risk assessment:

(i) All relevant risks and/or hazards should be systematically addressed;
(ii) The risk assessment should address what actually happens in the workplace during the work activity;
(iii) All employees and those who may be affected must be considered, including maintenance staff, security

guards, visitors and subcontractors;
(iv) The risk assessment should highlight those groups and individuals who may be required to work alone or who have disabilities;
(v) The risk assessment process should consider the existing safety measures and controls;
(vi) The level of detail on a risk assessment should be appropriate to the level of risk.

The following is a typical list of Risk Assessments to be performed:

(vii) Clearing and Grubbing of the area/site
(viii) Site establishment including:
(ix) Office/s
(x) Secure/safe storage for materials, plant and equipment
(xi) Ablutions
(xii) Sheltered eating area
(xiii) Maintenance workshop
(xiv) Vehicle access to the site
(xv) Dealing with existing structures
(xvi) Location of existing services
(xvii) Installation and maintenance of temporary construction electrical supply, lighting and equipment
(xviii) Adjacent land uses/surrounding property exposures
(ixx) Boundary and access control/public liability exposures (NB: the employer is also responsible for the OH&S of non-employees affected by his/her work activities.)
Health risks arising from neighbouring as well as own activities and from the environment e.g. threats by dogs, bees, snakes, lightning etc.

- Exposure to noise
- Exposure to vibration
- Protection against dehydration and heat exhaustion
- Protection from wet and cold conditions
- Dealing with HIV/Aids and other diseases
- Use of portable electrical equipment including
- Angle grinder
- Electrical drilling machine
- Circular saw
- Excavations including
- Ground/soil conditions
- Trenching
- Shoring
- Drainage of trench
- Welding including
- Arc welding
- Gas welding
- Flame cutting
- Use of LP gas torches and appliances
- Loading and offloading of trucks
- Aggregate/sand and another materials delivery
- Manual and mechanical handling
- Lifting and lowering operations
- Driving and operation of construction vehicles and mobile plant including
- Trenching machine
- Excavator
- Bomag roller
- Plate compactor
- Front end loader
- Mobile cranes and the ancillary lifting tackle
- Parking of vehicles and mobile plant
- Towing of vehicles and mobile plant
- Use and storage of flammable liquids and other hazardous substances e.g. petrol, diesel, cement, asphalt, bituminous materials and the like.
- Layering and bedding
- Installation of pipes/sleeves in trenches
- Pressure testing of pipelines
- Backfilling of trenches
- Protection against flooding

- Use of explosives
- Protection from overhead power lines
- As discovered by the principal contractor's hazard identification exercise
- As discovered from any inspections and audits conducted by the client or by the principal contractor or any other contractor on site
- As discovered from any accident/incident investigation.

(f) Traffic Accommodation
(i) General
A traffic management plan is to be supplied by the contractor and agreed to by the Engineer.

(ii) Traffic Safety Officer
The Employer requires that a Traffic Safety Officer be appointed. The appointment shall be in writing and the responsibilities clearly stated together with the period for which the appointment is made. This information shall be communicated and agreed with the appointees. Notice of appointments shall be submitted to the Employer. All changes shall also be communicated to the Employer.

(iii) Public
The protection of members of public as road users, road traffic and pedestrians must be prioritised.

(iv) Construction Materials
The following commonly used construction materials and substances potentially pose health and safety hazards:
(1) All materials contained in pressurized containers;
(2) Bitumen products;
(3) Cement;
(4) Epoxies;
(5) Lime and other stabilizing agents;
(6) Paints;
(7) Tar products;
(8) Timber preservatives.
The materials to be used to construct the works are described in the following:
(9) The Scope of Work;
(10) The Project Specifications;
(11) The Standard Specifications;
(12) The Drawings;
(13) The Bills of Quantities;
The contractor shall take appropriate measures to manage the risks associated with the use of all the materials required to complete the works, ie not only those listed above, and shall, inter alia, implement all the precautionary measures provided by manufacturers and suppliers for the storage, use and application of materials used.

FURTHER REQUIREMENTS

Duties of Principal Contractor / Contractors in Terms of the Construction Regulations 2014

A principal contractor must-

- provide and demonstrate to the client a suitable, sufficiently documented and coherent site-specific health and safety plan, based on the client's documented health and safety specifications, which plan must be applied from the date of commencement of and for the duration of the construction work and which must be reviewed and updated by the principal contractor as work progresses;

- open and keep on site a health and safety file, which must include all documentation required in terms of the Act and these Regulations, which must be made available on request to an inspector, the client, the client's agent or a contractor; and

- on appointing any other contractor, in order to ensure compliance with the provisions of the Act –
  - provide contractors who are tendering to perform construction work for the principal contractor, with the relevant sections of the health and safety specifications pertaining to the construction work which has to be performed;

  - ensure that potential contractors submitting tenders have made sufficient provision for health and safety measures during the construction process;

- ensure that no contractor is appointed to perform construction work unless the principal contractor is reasonably satisfied that the contractor that he or she intends to appoint, has the necessary competencies and resources to perform the construction work safely;
- ensure prior to work commencing on the site that every contractor is registered and in good standing with the compensation fund or with a licensed compensation insurer as contemplated in the Compensation for Occupational Injuries and Diseases Act, 1993;
- appoint each contractor in writing for the part of the project on the construction site
- take reasonable steps to ensure that each contractor's health and safety plan is implemented and maintained on the construction site;
- ensure that the periodic site audits and document verification are conducted at intervals mutually agreed upon between the principal contractor and any contractor, but at least once every 30 days;
- stop any contractor from executing construction work which is not in accordance with the client's health and safety specifications and the principal contractor's health and safety plan for the site or which poses a threat to the health and safety of persons;

- where changes are brought about to the design and construction, make available sufficient health and safety information and appropriate resources to the contractor to execute the work safely; and
- discuss and negotiate with the contractor the contents of their health and safety plan and finally approve that plan for implementation
- ensure that a copy of both the principal contractor and contractor’s health and safety plan is available on request to an employee, an inspector, a contractor, the client or the client's agent;
- hand over a consolidated health and safety file to the client upon completion of the construction work, to include a record of all drawings, designs, materials used and other similar information concerning the completed structure;
- in addition to the documentation required in the health and safety file include and make available a comprehensive and updated list of all the contractors on site accountable to the principal contractor, the agreements between the parties and the type of work being done; and
- ensure that all his or her employees have a valid medical certificate of fitness specific to the construction work to be performed and issued by an occupational health practitioner in the form of Annexure 3.
- A contractor must prior to performing any construction work-
- provide and demonstrate to the principal contractor a suitable and sufficiently documented health and safety plan, based on the relevant sections of the client's health and safety specification and provided by the principal contractor, which plan must be applied from the date of commencement of and for the duration of the construction work and which must be reviewed and updated by the contractor as work progresses;
- open and keep on site a health and safety file, which must include all documentation required in terms of the Act and these Regulations, and which must be made available on request to an inspector, the client, the client's agent or the principal contractor;
- before appointing another contractor to perform construction work be reasonably satisfied that the contractor that he or she intends to appoint has the necessary competencies and resources to perform the construction work safely;
- co-operate with the principal contractor as far as is necessary to enable each of them to comply with the provisions of the Act; and
- as far as is reasonably practicable, promptly provide the principal contractor with any information which might affect the health and safety of any person at work carrying out construction work on the site, any person who might be affected by the work of such a person at work, or which might justify a review of the health and safety plan.

Where a contractor appoints another contractor to perform construction work, the duties that apply to the principal contractor will apply to the contractor as if he or she were the principal contractor.

A principal contractor must take reasonable steps to ensure co-operation between all contractors appointed by the principal contractor to enable each of those contractors to comply with these Regulations.

No contractor may allow or permit any employee or person to enter any site, unless that employee or person has undergone health and safety induction training pertaining to the hazards prevalent on the site at the time of entry.

A contractor must ensure that all visitors to a construction site undergo health and safety induction pertaining to the hazards prevalent on the site and must ensure that such visitors have the necessary personal protective equipment.

A contractor must at all times keep on his or her construction site records of the health and safety induction training and such records must be made available on request to an inspector, the client, the client's agent or the principal contractor;

A contractor must ensure that all his or her employees have a valid medical certificate of fitness specific to the construction work to be performed and issued by an occupational health practitioner in the form of Annexure 3.

Management and supervision of construction work

A principal contractor must, in writing, appoint one full-time competent person as the construction manager with the duty of managing all the construction work on a single site, including the duty of ensuring occupational health and safety compliance, and in the absence of the construction manager an alternate must be appointed by the principal contractor.

A principal contractor must upon having considered the size of the project, in writing appoint one or more assistant construction managers for different sections thereof: Provided that the designation of any such person does not relieve the construction manager of any personal accountability for failing in his or her management duties in terms of this regulation.

Where the construction manager has not appointed assistant construction managers, or, in the opinion of an inspector, a sufficient number of such assistant construction managers have not been appointed, that inspector must direct the construction manager in writing to appoint the number of assistant construction managers indicated by the inspector, and those assistant construction managers must be regarded as having been appointed.

No construction manager appointed under this sub regulation may manage any construction work on or in any construction site other than the site in respect of which he or she has been appointed.

A contractor must, after consultation with the client and having considered the size of the project, the degree of danger likely to be encountered or the accumulation of hazards or risks on the site, appoint a full-time or part-time construction health and safety officer in writing to assist in the control of all health and safety related aspects on the site: Provided that, where the question arises as to whether a construction health and safety officer is necessary, the decision of an inspector is decisive.

No contractor may appoint a construction health and safety officer to assist in the control of health and safety related aspects on the site unless he or she is reasonably satisfied that the construction health and safety officer that he or she intends to appoint is registered with a statutory body approved by the Chief Inspector and has necessary competencies and resources to assist the contractor

A construction manager must in writing appoint construction supervisors responsible for construction activities and ensuring occupational health and safety compliance on the construction site.

A contractor must, upon having considered the size of the project, in writing appoint one or more competent employees for different sections thereof to assist the construction supervisor, and every such employee has, to the extent clearly defined by the contractor in the letter of appointment, the same duties as the construction supervisor: Provided that the designation of such employee does not relieve the construction supervisor of any personal accountability for failing in his or her supervisory duties. Where the contractor has not appointed such an employee, or, in the opinion of an inspector, a sufficient number of such employees have not been appointed, that inspector must instruct the employer to appoint the number of employees indicated by the inspector.
No construction supervisor appointed may supervise any construction work on or in any construction site other than the site in respect of which he or she has been appointed: Provided that if a sufficient number of competent

employees have been appropriately designated on all the relevant construction sites, the appointed construction supervisor may supervise more than one site.

Notification of Intention to Commence Construction Work

The Contractor shall notify the Provincial Director of the Department of Labour of the intention to commence construction work at least 7 days prior to the works commencing if the intended construction work will:

- Include excavation work
- Include work at height where there is a risk of falling
- Include the demolition of a structure, or
- Include the use of explosives to perform construction work.

If the construction work involves construction of a single storey dwelling for a client, and such client will be residing in such dwelling upon completion, the contractor must also notify the Provincial Director of the Department of Labour at least 7 days before the works commence.

This must be done on a form similar to an Annexure 2. A copy of the notification letter to the Provincial Director shall be forwarded to the Client for record purposes.

Construction Work Permit

It must be noted that from August 2015 all projects that meet the following criteria will require a construction work permit to be applied for at least 30 days prior to the work being carried out:

Exceeds 180 days
Will involve more than 1800-person days of construction work
Works contract is of a value equal to or exceeding thirteen million rand, or Construction Industry Grading Board (CIDB) grading level 6

It is the client's responsibility to apply for this permit from the Provincial Director and construction work may not commence until the permit has been issued by the Provincial Director.

A copy of this permit will be required to be kept in the principal contractor's safety file, and the site-specific number issued by the Provincial Director must be displayed at the site entrance.

Assignment of Contractor's Responsible Persons to Manage Health & Safety on Site

The Contractor shall submit management and supervisory appointments as well as any relevant appointments in writing (as stipulated by the Construction Regulations 2014 and the Occupational Safety and Health Act 1993), prior to commencement of work (Annexure B)

Competency for Contractor's Responsible Persons

The Contractor's responsible persons shall be competent in health and safety and be familiar with the Occupational Health and Safety Act 1993, and applicable regulations. Valid proof of pertinent health and safety courses attended by such persons will be required to be presented to the Client.

Compensation of Occupational Injuries and Diseases Act 130 of 1993 (COIDA)

The Contractor shall submit to the Client a valid letter of good standing with the Compensation Insurer as part of their tender bid.

Occupational Health and Safety Policy

The Contractor shall submit a Health and Safety Policy with the Tender, signed by the Chief Executive Officer. The Policy must outline objectives and how they will be achieved and implemented by the Company / Contractor.

Health and Safety Organogram

The Contractor shall submit an organogram with the Tender, outlining the Health and Safety Site Team that will be assigned to the project, if successful with the tender. In cases where appointments have not been made, the organogram shall reflect the position. The organogram shall be updated, when there is a change in the site team.

Risk Assessments

STELLENBOSCH
STELLENBOSCH • PNIEL • FRANSCHHOEK
MUNISIPALITEIT • UMASIPALA • MUNICIPALITY

Baseline Risk Assessment

The Client shall cause a baseline risk assessment to be conducted by a competent person before the design process and tender process commence, and the assessed risks shall form part of the health and safety specifications.

This baseline risk assessment will need to be comprehensive and may well lead to further, separate, more in depth risk assessment studies. The baseline risk assessment should be periodically reviewed.

The Contractor must, before commencement of any construction work, and during construction work, have risk assessments performed by a competent person appointed in writing, which risk assessments form part of the health and safety plan to be applied on the site and must include:

The identification of the risks and hazards to which persons may be exposed to;

- An analysis and evaluation of the risks and hazards identified; based on a documented method
- A documented plan and applicable safe work procedures to mitigate, reduce or control the risks and hazards that have been identified;
- A monitoring plan; and
- A review plans

The Contractor must ensure that, as far as is reasonably practicable, ergonomic related hazards are analysed, evaluated and addressed in a risk assessment.

The Contractor must ensure that all employees under his control are informed, instructed and trained by a competent person regarding any hazard and the related work procedures and/or control measures **before any work commences** and thereafter **at the times determined in the risk assessment monitoring and review plan of the relevant site.**

The Principal Contractor must ensure that all contractors are informed regarding any hazard that is stipulated in the risk assessment **before any work commences** and thereafter **at the times determined in the risk assessment monitoring and review plan of the relevant site**.

The Contractor must consult with the health and safety committee or with a representative trade union or representative group of employees if no health and safety committee exist, on the monitoring and review of the risk assessments for the site.

The Contractor must ensure that copies of risk assessment for this site are available on sit for inspection purposes by interested parties (inspector, the client, client's agent, any contractor, any employee, a representative trade union, a health and safety representative or safety committee member.

A Contractor must review the relevant risk assessment where changes are affected to the design and/or construction that result in a change to the risk profile, or when an incident has occurred.

Preventative measures must first address the elimination of the hazard or risk. Should PPE be required to reduce risk, the equipment or clothing must be used and be SABS approved

In general, the Contractor must ensure that the Risk Assessment involves identifying the hazards present in a work activity on site. This is followed by an evaluation of the extent of the risk involved considering those precautions already being taken.

The following general principle should be followed when conducting a risk assessment:
All relevant risks and/or hazards should be systematically addressed;
The risk assessment should address what actually happens in the workplace during the work activity;
All employees and those who may be affected must be considered, including maintenance staff, security guards, visitors and subcontractors;
The risk assessment should highlight those groups and individuals who may be required to work alone or who have disabilities;
The risk assessment process should consider the existing safety measures and controls.
The level of detail on a risk assessment should be appropriate to the level of risk.

Health and Safety Representative(s)

The Contractor shall ensure that a Health and Safety Representative(s) are /is elected and trained to carry out his / her functions. The appointment must be in writing. The Health and Safety Representative shall carry out regular inspection, keep records and report to the supervisor to take appropriate action. He / she shall attend Health and Safety Committee Meetings. The Health and Safety Representative shall be part of the team that will investigate incidents, accidents & non-conformances.

Health and Safety Committee

Where two or more health and safety representatives have been appointed on site, the Contractor shall ensure that monthly health and safety meetings are held with such representatives and minutes are kept on record. Meetings must be organized and chaired by the Contractor's Health and Safety Committee Chairperson. Minutes of these meetings must be publicised for reference by the employees of the contractor.

Medical Certificate of Fitness

It must be noted that the contractor must ensure that their employees on site have a valid medical certificate of fitness, specific to the construction work being performed, issued by an occupational health practitioner in the form of an Annexure 3 template (refer to the Construction Regulations 2014 on the Department of Labour website for a sample of this form).

Health and Safety Training

The Contractor shall quarterly conduct a training needs analysis to ascertain what health and safety training is required. A plan of action should be devised and forwarded to the Client for records. Once the identified people have attended the training, the Contractor must provide the Client with copies of certificates obtained.

Induction

No Contractor may allow or permit any employee or person to enter site unless they undergone health and safety induction training pertaining to the hazards prevalent on site at the time of entry. This includes visitors to site. The Contractor must ensure that visitors to site have the necessary protective equipment (PPE) and shall keep a copy of the attendance register of all his / her employees who attended the induction.

Awareness

The Contractor shall conduct, on site, periodic toolbox talks, preferably weekly or before any hazardous work takes place. The talks shall cover the relevant activity and an attendance register must be kept and signed by all attendees. A record of who attended and the content of the topic will be kept on the site health a safety file as evidence of training.

Competency

After the Contractor has identified the training to be conducted as part of the competency requirement, and based on Risk Assessment he shall send the relevant persons on appropriate courses and keep certificates of training for reference. Familiarity with the health and safety Act and regulations is an integral part of the definition of competence.

General Record Keeping

The Contractor shall keep and maintain Health and Safety records to demonstrate compliance with the Health and Safety Specification and the Occupational Health and Safety Act. The contractor shall ensure that all records of incidents, spot fines, training etc. are kept on site. All documents shall be available for inspection by the Client, or the Department of Labour's Inspectors.

General Inspection, Monitoring and Reporting

The Contractor shall carry out inspections as required by Annexure C in this health and safety specification, as well as by health and safety legislation.

Emergency Procedures

The Contractor shall submit a detailed Emergency Procedure for approval by the Client prior to commencement on site. The procedure shall detail the response plan including the following key personnel:
List of key personnel,
Details of emergency services,

Actions or steps to be taken in the event of the emergency; and
Information on hazardous materials / situations, including each material's hazardous potential impact or risk on the environment or human and measures to be taken in the event of an accident.

Emergency procedure(s) shall include, but shall not be limited to, fire, spills, accidents to employees, use of hazardous substances, dangers as a result of riot / service deliver protests / intimidation, etc. The Contractor shall advise the Client in writing of any on-site emergencies, together with a record of action taken, within 24 hours of the emergency occurring. A contact list of all service providers (Fire Department, Ambulance, Police, Medical and Hospital, etc.) must be maintained and available to site personnel.

First Aid Box and First Aid Equipment

The Contractor shall provide first aid box/es and appoint, in writing, First Aider(s) for this project in line with the results of the Contractor's risk assessment for the project, this health and safety specification as well as the provisions of the General Safety Regulations. The appointed First Aider(s) are to be sent for accredited first aid training before starting on site. Valid certificates are to be kept on site.
First Aid box/s must be adequately stocked at all time, accessible and be controlled by a qualified First Aider. If required by the Client, the Contractor shall have a stretcher on site to be used in case of a serious incident.

Accident / Incident Reporting and Investigation

The Contractor shall in addition to the prescribed requirements of the Occupational Health and Safety Act and General Safety Regulations investigate, record and report all Section 24 reportable incidents to the Client within 24 hours of the incident occurring. Incident investigations shall be conducted by the Contractor's appointed Accident Investigator – this Investigator must be a competent person or persons who have sufficient knowledge to carry out an investigation.

In the event of a fatality or a permanent disabling injury the Contractor must submit proof of reporting of incident to Department of Labour as well as proof of preventative measures to the Client. The Client reserves the right to conduct investigations into any incidents that they deem fit and the Contractor is required to provide full co-operation in this regard.

Hazards and Potential Situations

The Contractor shall immediately notify other Contractors of any hazardous or potentially hazardous situations, which may arise during performance of the activities.

Occupational Health and Safety Signage

The Contractor shall ascertain and provide adequate on-site health and safety signage. This signage shall include, but shall not be limited to, Hard Hat / Helmet Area; Safety Shoes to be worn on site; Dust Masks to be worn in areas where there might be exposure to excessive dust; Ear Plugs / Muffs to be worn where there might be noise exposure over 85 dB; Gloves; Safety Goggles; Safety Harness, workers in excavation, traffic management, etc. The Contractor shall be responsible to maintain the quality and replacement of signage.

Management of Contractors by Principal Contractor

The Principal Contractor shall ensure that all contractors under his control are complying with the respective health and safety plans, as well as health and safety legislation.

Stacking of Materials

In addition to the provisions for the stacking of articles in the General Safety Regulations, 2003, the contractor must ensure that –

- a competent person is appointed in writing with the duty of supervising all stacking and storage on a construction site;
- adequate storage areas are provided;
- there are demarcated storage areas; and
- storage areas are kept neat and under control.

Housekeeping and General Safeguarding on Construction Sites

A contractor must, in addition to compliance with the Environmental Regulations for Workplaces, 1987, promulgated by Government Notice No. R. 2281 of 16 October 1987, ensure that suitable housekeeping is

continuously implemented on each construction site, including-

- the proper storage of materials and equipment;
- the removal of scrap, waste and debris at appropriate intervals;
- ensuring that materials required for use, are not placed on the site so as to obstruct means of access to and egress from workplaces and passageways;
- ensuring that materials which are no longer required for use, do not accumulate on and are removed from the site at appropriate intervals;
- ensuring that waste and debris are not disposed of from a high place with a chute, unless the chute complies with the requirements set out in regulation 14(6);
- ensuring that construction sites in built-up areas adjacent to a public way are suitably and sufficiently fenced off and provided with controlled access points to prevent the entry of unauthorized persons; and
- ensuring that a catch platform or net is erected above an entrance or passageway or above a place where persons work or pass under, or fencing off the danger area if work is being performed above such entrance, passageway, or place so as to ensure that all persons are kept safe in the case of danger or possibility of persons being struck by falling objects.

Construction vehicles and mobile plant

A contractor must ensure that all construction vehicles and mobile plant-

- are of an acceptable design and construction;
- are maintained in a good working order;
- are used in accordance with their design and the intention for which they were designed, having due regard to safety and health;
- are operated by a person who-

i) has received appropriate training, is certified competent and in possession of proof of competency and is authorised in writing to operate those construction vehicles and mobile plant;

ii) has a medical certificate of fitness to operate those construction vehicles and mobile plant, issued by an occupational health practitioner in the form of Annexure 3.;

- have safe and suitable means of access and egress;
- are properly organized and controlled in any work situation by providing adequate signaling or other control arrangements to guard against the dangers relating to the movement of vehicles and plant, in order to ensure their continued safe operation;
- are prevented from falling into excavations, water or any other area lower than the working surface by installing adequate edge protection, which may include guardrails and crash barriers;
- are fitted with structures designed to protect the operator from falling material or from being crushed should the vehicle or mobile plant overturn;
- are equipped with an acoustic warning device which can be activated by the operator;
- are equipped with an automatic acoustic reversing alarm; and
- are inspected by the authorised operator or driver on a daily basis using a relevant checklist prior to use and that the findings of such inspection are recorded in a register kept in the construction vehicle or mobile plant.

A contractor must ensure that-

- no person rides or is required or permitted to ride on a construction vehicle or mobile plant otherwise than in a safe place provided thereon for that purpose;
- every construction site is organized in such a way that, as far as is reasonably practicable, pedestrians and vehicles can move safely and without risks to health;
- the traffic routes are suitable for the persons, construction vehicles or mobile plant using them, are sufficient in number, in suitable positions and of sufficient size;
- every traffic route is, where necessary, indicated by suitable signs;
- all construction vehicles and mobile plant left unattended at night, adjacent to a public road in normal use or adjacent to construction areas where work is in progress, have appropriate lights or reflectors, or barricades equipped with appropriate lights or reflectors, in order to identify the location of the vehicles or plant;
- all construction vehicles or mobile plant when not in use, have buckets, booms or similar appendages, fully lowered or blocked, controls in a neutral position, motors stopped, wheels chocked, brakes set and ignition secured;

- whenever visibility conditions warrant additional lighting, all mobile plant are equipped with at least two headlights and two taillights when in operation;
- tools, material and equipment are secured and separated by means of a physical barrier in order to prevent movement when transported in the same compartment with employees;
- vehicles used to transport employees have seats firmly secured and adequate for the number of employees to be carried; and
- all construction vehicles or mobile plant travelling, working or operating on public roads comply with the requirements of the National Road Traffic Act, 1996.

Electrical installations and machinery on construction sites

A contractor must, in addition to compliance with the Electrical Installation Regulations, 2009, and the Electrical Machinery Regulations, 1988, promulgated by Government Notice No.1593 of 12 August 1988, ensure that-

- before construction commences and during the progress thereof, adequate steps are taken to ascertain the presence of and guard against danger to workers from any electrical cable or apparatus which is under, over or on the site;
- all parts of electrical installations and machinery are of adequate strength to withstand the working conditions on construction sites;
- the control of all temporary electrical installations on the construction site is designated to a competent person who has been appointed in writing for that purpose;
- all temporary electrical installations used by the contractor are inspected at least once a week by a competent person and the inspection findings are recorded in a register kept on the construction site; and
- all electrical machinery is inspected by the authorized operator or user on a daily basis using a relevant checklist prior to use and the inspection findings are recorded in a register kept on the construction site.

Use and temporary storage of flammable liquids on construction sites

A contactor must, in addition to compliance with the provisions for the use and storage of flammable liquids in the General Safety Regulations, 2003, ensure that –

- where flammable liquids are being used, applied or stored at the workplace concerned, it is done in a manner that does not cause a fire or explosion hazard, and that the workplace is effectively ventilated;
- no person smokes in any place in which flammable liquid is used or stored, and the contractor must affix a suitable and conspicuous notice at all entrances to any such areas prohibiting such smoking;
- an adequate amount of efficient fire-fighting equipment is installed in suitable locations around the flammable liquids store with the recognized symbolic signs;
- only the quantity of flammable liquid needed for work on one day is taken out of the store for use;
- all containers holding flammable liquids are kept tightly closed when not in actual use and, after their contents have been used up, are removed from the construction site and safely disposed of;
- where flammable liquids are decanted, the metal containers are bonded and earthed; and
- no flammable material, including cotton waste, paper, cleaning rags or similar material is stored together with flammable liquids

Water environments

A contractor must ensure that where construction work is done over or in close proximity to water, provision is made for-

- preventing persons from falling into water; and
- the rescuing of persons in danger of drowning.

A contractor must ensure that where a person is exposed to the risk of drowning by falling into the water, the person is provided with and wears a lifejacket.

Fire precautions on Construction Sites

A contractor must, in addition to compliance with the Environmental Regulations for Workplaces, 1987, ensure that –

(a) all appropriate measures are taken to avoid the risk of fire;
(b) sufficient and suitable storage is provided for flammable liquids, solids and gases;
(c) smoking is prohibited and notices in this regard are prominently displayed in all places containing readily combustible or flammable materials;
(d) in confined spaces and other places in which flammable gases, vapours or dust can cause danger-
(i) only suitably protected electrical installations and equipment, including portable lights, are used;
(ii) there are no flames or similar means of ignition;

(iii) there are conspicuous notices prohibiting smoking;
(iv) oily rags, waste and other substances liable to ignite are without delay removed to a safe place; and
(v) adequate ventilation is provided;
(e) combustible materials do not accumulate on the construction site;
(f) welding, flame cutting and other hot work are done only after appropriate precautions have been taken to reduce the risk of fire;
(g) suitable and sufficient fire-extinguishing equipment is placed at strategic locations or as may be recommended by the Fire Chief or local authority concerned, and that such equipment is maintained in a good working order;
(h) the fire equipment contemplated in paragraph (g) is inspected by a competent person, who has been appointed in writing for that purpose, in the manner indicated by the manufacturer thereof;
(i) a sufficient number of workers are trained in the use of fire- extinguishing equipment;
(j) where appropriate, suitable visual signs are provided to clearly indicate the escape routes in the case of a fire; the means of escape is kept clear at all times;
(l) there is an effective evacuation plan providing for all-
persons to be evacuated speedily without panic;
persons to be accounted for; and
plant and processes to be shut down; and
(m) a siren is installed and sounded in the event of a fire.

Construction Employees' Facilities

A contractor must, in addition to the construction site provisions in the Facilities Regulations, 2004, promulgated by Government Notice No. R. 924 of 3 August 2004, provide at / or within reasonable access of every construction site, the following clean, hygienic and maintained facilities:

- Shower facilities after consultation with the employees or employees' representatives, or at least one shower facility for every 15 persons;
- at least one sanitary facility for each sex and for every 30 workers;
- changing facilities for each sex; and sheltered eating area.

A contractor must provide reasonable and suitable living accommodation for the workers at construction sites who are far removed from their homes and where adequate transportation between the site and their homes, or other suitable living accommodation, is not available.

Fall protection

The Contractor must:
- designate a competent person to be responsible for the preparation of a fall protection plan
- ensure that the fall protection plan contemplated in paragraph (a) is implemented, amended where and when necessary and maintained as required; and
- take steps to ensure continued adherence to the fall protection plan.

A fall protection plan contemplated above must include-
- a risk assessment of all work carried out from a fall risk position and the procedures and methods used to address all the risks identified per location;
- the processes for the evaluation of the employees' medical fitness necessary to work at a fall risk position and the records thereof;
- a programme for the training of employees working from a fall risk position and the records thereof;
- the procedure addressing the inspection, testing and maintenance of all fall protection equipment; and
- a rescue plan detailing the necessary procedure, personnel and suitable equipment required to affect a
- rescue of a person in the event of a fall incident to ensure that the rescue procedure is implemented immediately following the incident.

A contractor must ensure that a construction manager appointed under regulation 8(1) is in possession of the most recently updated version of the fall protection plan.

A contractor must ensure that ensure that all unprotected openings in floors, edges, slabs, hatchways and stairways are adequately guarded, fenced or barricaded or that similar means are used to safeguard any person from falling through such openings;

Also that no person is required to work in a fall risk position, unless such work is performed safely as contemplated in above and fall prevention and fall arrest equipment are approved as suitable and of sufficient strength for the purpose for which they are being used, having regard to the work being carried out and the load, including any person, they are intended to bear; and securely attached to a structure or plant, and the structure of plant and the means of attachment thereto are suitable and of sufficient strength and stability for the purpose of safely supporting the equipment and person who could fall, and fall arrest equipment is used only where it is not reasonably practicable to use fall prevention equipment.

Temporary works

A contractor must appoint a temporary works designer in writing to design, inspect and approve the erected temporary works on site before use.

A contractor must ensure that all temporary works operations are carried out under the supervision of a competent person who has been appointed in writing for that purpose.

A contractor must ensure that-

- all temporary works structures are adequately erected, supported, braced and maintained by a competent person so that they are capable of supporting all anticipated vertical and lateral loads that may be applied to them, and that no loads are imposed onto the structure that the structure is not designed to withstand;
- all temporary works structures are done with close reference to the structural design drawings, and where any uncertainty exists the structural designer should be consulted;
- detailed activity specific drawings pertaining to the design of temporary works structures are kept on the site and are available on request to an inspector, other contractors, the client, the client's agent or any employee;
- all persons required to erect, move or dismantle temporary works structures are provided with adequate training and instruction to perform those operations safely;
- all equipment used in temporary works structure are carefully examined and checked for suitability by a competent person, before being used;
- all temporary works structures are inspected by a competent person immediately before, during and after the placement of concrete, after inclement weather or any other imposed load and at least on a daily basis until the temporary works structure has been removed and the results have been recorded in a register and made available on site;
- no person may cast concrete, until authorization in writing has been given by the competent person contemplated above;
- if, after erection, any temporary works structure is found to be damaged or weakened to such a degree that its integrity is affected, it is safely removed or reinforced immediately;
- adequate precautionary measures are taken in order to-
- secure any deck panels against displacement; and
- prevent any person from slipping on temporary works due to the application of release agents;
- as far as is reasonably practicable, the health of any person is not affected through the use of solvents or oils or any other similar substances;
- upon casting concrete, the temporary works structure is left in place until the concrete has acquired sufficient strength to safely support its own weight and any imposed load, and is not removed until authorization in writing has been given by the competent person
- the foundation conditions are suitable to withstand the loads caused by the temporary works structure and any imposed load in accordance with the temporary works design.
- provision is made for safe access by means of secured ladders or staircases for all work to be carried out above the foundation bearing level;
- a temporary works drawing or any other relevant document includes construction sequences and methods statements;
- the temporary works designer has been issued with the latest revision of any relevant structural design drawing;
- a temporary works design and drawing is used only for its intended purpose and for a specific portion of a construction site; and
- the temporary works drawings are approved by the temporary works designer before the erection of any temporary works.

No contractor may use a temporary works design and drawing for any work other than its intended purpose.

Excavation

A contractor must-

- ensure that all excavation work is carried out under the supervision of a competent person who has been appointed in writing for that purpose; and
- evaluate, as far as is reasonably practicable, the stability of the ground before excavation work begins.

A contractor who performs excavation work-

- must take reasonable and sufficient steps in order to prevent, as far as is reasonably practicable, any person from being buried or trapped by a fall or dislodgement of material in an excavation;
- may not require or permit any person to work in an excavation which has not been adequately shored or braced: Provided that shoring and bracing may not be necessary where-
- the sides of the excavation are sloped to at least the maximum angle of repose measured relative to the horizontal plane; or such an excavation is in stable material: Provided that-
- permission has been given in writing by the appointed competent person contemplated above upon evaluation by him or her of the site conditions; and
- where any uncertainty pertaining to the stability of the soil still exists, the decision from a professional engineer or a professional technologist competent in excavations is decisive and such a decision must be noted in writing and signed by both the competent person and the professional engineer or technologist, as the case may be;
- must take steps to ensure that the shoring or bracing contemplated in paragraph
- is designed and constructed in a manner that renders it strong enough to support the sides of the excavation in question;
- must ensure that no load, material, plant or equipment is placed or moved near the edge of any excavation where it may cause its collapse and consequently endangers the safety of any person, unless precautions such as the provision of sufficient and suitable shoring or bracing are taken to prevent the sides from collapsing;
- must ensure that where the stability of an adjoining building, structure or road is likely to be affected by the making of an excavation, steps are taken to ensure the stability of such building, structure or road and the safety of persons;
- must cause convenient and safe means of access to be provided to every excavation in which persons are required to work, and such access may not be further than six meters from the point where any worker within the excavation is working;
- must ascertain, as far as is reasonably practicable, the location and nature of electricity, water, gas or other similar services which may in any way be affected by the work to be performed, and must before the commencement of excavation work that may affect any such service, take the steps that are necessary to render the circumstances safe for all persons involved;
- must ensure that every excavation, including all bracing and shoring, is inspected-
  - daily, prior to the commencement of each shift;
  - after every blasting operation;
  - after an unexpected fall of ground;
  - after damage to supports; and
  - after rain,
- by the competent person contemplated in sub regulation (1), in order to ensure the safety of the excavation and of persons, and those results must be recorded in a register kept on site and made available on request to an inspector, the client, the client's agent, any other contractor or any employee;
- must cause every excavation which is accessible to the public or which is adjacent to public roads or thoroughfares, or whereby the safety of persons may be endangered, to be-
- adequately protected by a barrier or fence of at least one meter in height and as close to the excavation as is practicable; and
- provided with warning illuminates or any other clearly visible boundary indicators at night or when visibility is poor, or have resort to any other suitable and sufficient precautionary measure where this is not practicable;
- must ensure that all precautionary measures stipulated for confined spaces as determined in the General Safety Regulations, 2003, are complied with by any person entering any excavation;
- must, where the excavation work involves the use of explosives, appoint a competent person in the use of explosives for excavation, and must ensure that a method statement is developed by that person in accordance with the applicable explosives legislation; and
- must cause warning signs to be positioned next to an excavation within which or where persons are working or carrying out inspections or tests.

Demolition work

A contractor must appoint a competent person in writing to supervise and control all demolition work on site.

A contractor must ensure that before any demolition work is carried out, and in order to ascertain the method of demolition to be used, a detailed structural engineering survey of the structure to be demolished is carried out by a competent person and that a method statement on the procedure to be followed in demolishing the structure is developed by that person.

During a demolition, the competent person contemplated in above must check the structural integrity of the structure at intervals determined in the method statement contemplated in above, in order to avoid any premature collapses.

A contractor who performs demolition work must with regard to a structure being demolished, take steps to ensure that-

- no floor, roof or other part of the structure is overloaded with debris or material in a manner which would render it unsafe;
- all reasonably practicable precautions are taken to avoid the danger of the structure collapsing when any part of the framing of a framed or partly framed building is removed, or when reinforced concrete is cut; and
- precautions are taken in the form of adequate shoring or other means that may be necessary to prevent the accidental collapse of any part of the structure or adjoining structure;
- ensure that no person works under overhanging material or a structure which has not been adequately supported, shored or braced;
- ensure that any support, shoring or bracing contemplated in paragraph (b), is designed and constructed so that it is strong enough to support the overhanging material;
- where the stability of an adjoining building, structure or road is likely to be affected by demolition work on a structure, take steps to ensure the stability of such structure or road and the safety of persons;
- ascertain as far as is reasonably practicable the location and nature of electricity, water, gas or other similar services which may in any way be affected by the work to be performed, and must before the commencement of demolition work that may affect any such service, take the steps that are necessary to render circumstances safe for all persons involved;
- cause every stairwell used and every floor where work is being performed in a building being demolished, to be adequately illuminated by either natural or artificial means;
- cause convenient and safe means of access to be provided to every part of the demolition site in which persons are required to work; and
- erect a catch platform or net above an entrance or passageway or above a place where persons work or pass under, or fence off the danger areas if work is being performed above such entrance, passageway, or place so as to ensure that all persons are kept safe where there is a danger or possibility of persons being struck by falling objects.

A contractor must ensure that no material is dropped to any point, which falls outside the exterior walls of the structure, unless the area is effectively protected

No person may dispose of waste and debris from a high place by a chute unless the chute-

- is adequately constructed and rigidly fastened;
- if inclined at an angle of more than 45 degrees to the horizontal, is enclosed on its four sides;
- if of the open type, is inclined at an angle of less than 45 degrees to the horizontal;
- where necessary, is fitted with a gate at the bottom end to control the flow of material; and discharges into a container or an enclosed area surrounded by barriers.

A contractor must ensure that every chute used to dispose of rubble is designed in such a manner that rubble does not free-fall and that the chute is strong enough to withstand the force of the debris travelling along the chute.

A contractor must ensure that no equipment is used on floors or working surfaces, unless such floors or surfaces are of sufficient strength to support the imposed loads.

Where a risk assessment indicates the presence of asbestos, a contractor must ensure that all asbestos related work is conducted in accordance with the Asbestos Regulations 2001.

Where a risk assessment indicates the presence of lead, a contractor must ensure that all lead related work is conducted in accordance with the Lead Regulations, 2001.

Where the demolition work involves the use of explosives, a method statement must be developed in accordance with the applicable explosives legislation, by an appointed person who is competent in the use of explosives for demolition work and all persons involved in the demolition works must adhere to demolition procedures issued by the appointed person.

A contractor must ensure that all waste and debris are as soon as reasonably practicable removed and disposed of from the site in accordance with the applicable legislation

Tunnelling

No person may enter a tunnel, which has a height dimension of less than 800 millimeters.

Scaffolding

A contractor must appoint a competent person in writing who must ensure that all scaffolding work operations are carried out under his or her supervision and that all scaffold erectors, team leaders and inspectors are competent to carry out their work.

A contractor using access scaffolding must ensure that such scaffolding, when in use, complies with the safety standards incorporated for this purpose into these Regulations under section 44 of the Act.

Bulk mixing plant

A contractor must ensure that the operation of a bulk mixing plant is supervised by a competent person who has been appointed in writing and is-

(a) aware of all the dangers involved in the operation thereof; and
(b) conversant with the precautionary measures to be taken in the interest of health and safety.

No person supervising or operating a bulk mixing plant may authorize any other person to operate the plant, unless that person is competent to operate a bulk mixing plant.

A contractor must ensure that the placement and erection of a bulk mixing plant complies with the requirements set out by the manufacturer and that such plant is erected as designed.

A contractor must ensure that all devices to start and stop a bulk mixing plant are provided and that those devices are placed in an easily accessible position and constructed in a manner to prevent accidental starting.

A contractor must ensure that the machinery and plant selected is suitable for the mixing task and that all dangerous moving parts of a mixer are placed beyond the reach of persons by means of doors, covers or other similar means.

No person may remove or modify any guard or safety equipment relating to a bulk mixing plant, unless authorized to do so by the appointed person contemplated in sub regulation (1).

A contractor must ensure that all precautionary measures stipulated for confined spaces as determined in the General Safety Regulations, 2003, are complied with when entering any silo.

A contractor must ensure that a record is kept of all repairs or maintenance to a bulk mixing plant and that the record is available on site to an inspector, the client, the client's agent or any employee.

Rope Access Work

A contractor must

- appoint a competent person in writing as a rope access supervisor with the duty of supervising all rope access work on the site, including the duty of ensuring occupational health and safety compliance in relation to rope access work: Provided that the appointment of any such person does not relieve the construction manager of any personal accountability for failing in his management duties in terms of this regulation;
- ensure that all rope access work on the construction site is carried out under the supervision of a competent person; and
- ensure that all rope access operators are competent and licensed to carry out their work.

No contractor may use or allow the use of rope access work unless-

- the design, selection and use of the equipment and anchors comply with the safety standards incorporated for this purpose into these Regulations under section 44 of the Act; and
- he or she is in possession of a site-specific fall protection plan developed by a competent person applicable to the specific work and environment prior to the commencement of the work, including records of maintenance and inspections of all the equipment used for the work operations.

A contractor must ensure that adequate measures are in place to allow rescue procedures to commence immediately in the event of a fall incident taking place

Hazardous Chemical Substances (HCS)

In addition to the requirements in the HCS Regulations, the principal contractor must provide proof in the Health and Safety Plan that:

- Material Safety Data Sheets (MSDS's) of the relevant materials / hazardous chemical substances are available prior to use by the contractor. All MSDS's shall be available for inspection by the agent at all times.
- Risk assessments are done at least once every 6 months.
- Exposure monitoring is done according to OESSM and by an Approved Inspection Authority (AIA) and that the medical surveillance programme is based on the outcomes of the exposure monitoring.
- How the relevant HCS's are being/going to be controlled by referring to:
  - Limiting the amount of HCS
  - Limiting the number of employees
  - Limiting the period of exposure
  - Substituting the HCS
  - Using engineering controls
  - Using appropriate written work procedures
  - The correct PPE is being used.
  - HCS are stored and transported according to SABS 072 and 0228.
  - Training with regards to these regulations was given.

The Health and Safety plan should refer to the disposal of hazardous waste on classified sites and the location thereof (where applicable).

The First Aider must be made aware of the MSDS and trained in how to treat HCS incidents appropriately.

Noise Induced Hearing Loss

Where noise is identified as a hazard the requirements of the NIHL regulations must be complied with and the following must be included / referred to in the Health and Safety Plan:

- Proof of training with regards to these regulations.
- Risk assessment done within 1 month of commencement of work.
- That monitoring carried out by an AIA and done according to SABS 083.
- Medical surveillance programme established and maintained for the necessary employees.
- Control of noise by referring to:
- Engineering methods considered
- Admin control (number of employees exposed) considered
- Personal protective equipment considered/decided on
- Describe how records are going to be kept for 40 years.

Explosives and Blasting

The Contractor shall ensure that the use of explosives and blasting (where required) be undertaken by a specialist contractor or a sub-contractor with proven track record in the type of work to be performed. Contractor may only use explosives for work purposes where the following conditions in place:

- Explosives Regulations to be complied with in all respects.
- Contractor must be in possession of a Blasting Licence
- Blasting permit to be obtained
- Permit to transport explosives to be obtained
- Method statement to be drawn up and approved by professional team
- Municipal authorities may require advance notice of planned use of explosives
- Contractor must notify Provincial Director of Department of Labour on Annexure 2 at least 7 days prior to blasting taking place
- Contractor must have Workman's Compensation and appropriate insurances in place

Personal Protective Equipment (PPE)

The Contractor shall carry out PPE or clothing needs analysis in accordance with his risk assessment, to determine the necessary PPE or clothing to be used during construction. The Contractor shall make provision and keep adequate quantities of SABS approved PPE or clothing on site at all times. The Contractor must ensure that lost, stolen, worn out or damaged PPE is replaced as required and receipt signed for by employees on site.

Asbestos

The Contractor shall ensure that all asbestos work is done only by registered "Asbestos Contractor" as prescribed by the Asbestos Regulations, 2001. The Contractor shall submit an Asbestos Certificate from Department of Labour which refer to the prescribed requirements. The Contractor shall notify The Client if there are any asbestos materials to be used on site.

Besides the requirements listed above, should asbestos be identified as a hazard at the workplace, the following must be included in the health and safety plan or as soon as its available:
Notification to the Provincial Director in writing, prior to commencement of asbestos work.

- Proof of a structured medical surveillance programme, drawn up by an occupational medicine practitioner.

- Proof that an initial health evaluation was carried out by an occupational health practitioner within 14 days after commencement of work.
- Copies of the results of all assessments, exposure monitoring and the written inventory of the location of the asbestos at the workplace.
- Only proof that medical surveillance has been conducted and not the actual records itself since these areas of a confidential nature.
- How records are going to be kept safe for the stipulated period of 40 years.
- Proof that asbestos demolition (if applicable) is going to be done by a registered asbestos contractor and provide proof that a plan of work for such demolition is submitted to an Approved Asbestos Inspection Authority 30 days prior to commencement of the demolition.
- Provide proof that the plan of work was approved by the asbestos AIA and submitted to the provincial director 14 days prior to commencement of demolition work together with the approved standardized procedures for demolition work.

Pressure Vessels (Including Gas Bottles)

The Contractor shall comply with Pressure Vessel Regulations, including:

- Providing competency and awareness training to the operators;
- Providing PPE or clothing;
- Providing and maintain appropriate signage in areas where pressure vessels are used, as applicable;
- Inspect equipment regularly and keep records of inspections;
- Providing appropriate firefighting equipment (Fire Extinguishers).

Fire Extinguishers and Fire Fighting Equipment

The Contractor shall provide adequate, regularly serviced fire extinguishers located at strategic points on site. The Contractor shall keep spare serviced portable fire extinguishers. The Contractor shall have adequate persons trained or competent to use the Fire Fighting Equipment.

Safety signage shall be posted up in all areas where fire extinguishers are located.

Lifting Machinery and Tackle

The Contractor shall ensure that lifting machinery and tackle is inspected before use and on a monthly basis. The Contractor shall have lifting machinery and tackle inspector who will inspect the equipment at intervals required by the Driven Machinery Regulations, considering that:

- All lifting machinery and tackle have a safe working load clearly indicated;
- Regular inspection and servicing are carried out;
- Records are kept of inspections and of service certificates;
- Thorough examinations are carried out by competent personnel at the frequencies required by legislation
- There is proper supervision in terms of guiding the loads which includes a trained banks man to direct and check lifting tackle if it is safe for use.

Ladders and Ladder work

The Contractor shall ensure that all ladders are numbered and inspected regularly keeping record of inspections. It should be noted that Aluminum ladders are preferred to wooden ladders.

General Machinery

The Contractor shall comply with the Driven Machinery Regulations, which include inspecting machinery regularly, appointing a competent person to inspect and ensure maintenance, issuing PPE or clothing and training those that use machinery and enforce compliance.

Portable Electrical Tools / Explosive Actuating Fastening Devices

The Contractor shall ensure that use and storage of all explosive actuating fastening devices and portable electrical tools are in compliance with relevant legislation. The Contractor shall consider that:
A competent person undertakes routine inspections;

- Only authorised persons use the tools;
- There are safe working procedures applied;
- Awareness training is carried out and compliance is enforced at all times; and
- PPE and clothing are provided and maintained.

High Voltage Electrical Equipment

The Contractor shall ensure that, where the work is under, on or near high-voltage electrical equipment the Electrical Installation Regulations, together with safety instructions (Regulations of the Owner of the Equipment) are complied with.

Such equipment includes: -

- Eskom and the Local Authority equipment
- The Contractor's own power supply; and
- Electrical equipment being installed but not yet taken over from a Contractor by The Client.

Public Health and Safety

The Contractor shall ensure that each person working on or visiting a site, and the surrounding community, shall be made aware of the dangers likely to arise from onsite activities and the precautions to be observed to avoid or minimize those dangers. Appropriate health and safety signage shall be posted at all times.

Both the Client and the Contractor have a duty in terms of health and safety legislation to do all that is reasonably practicable to prevent members of the public and others being affected by the construction processes to be aware and put preventative measure in place. The public or visitors shall go through a brief health and safety induction detailing hazards and risks they may be exposed to and what measures are in place to control these hazards and risks.

Night Work

The Contractor shall not undertake any night work without prior arrangement and a written permit from the Client. The Contractor shall ensure that adequate lighting is provided for all night work and failure to do so shall result in work being stopped.

Environmental Conditions and Flora and Fauna

The Contractor must be mindful of adverse weather conditions upon the health and safety of the workforce. This includes inclement weather, strong wind, heat stress, extreme cold, etc. The Contractor's risk assessment process must consider the risks associated with such weather conditions. The same is true when working in an environment where there is a risk to employees' health and safety from presence of poisonous flora, or wildlife (including bees, snakes, etc.). The Contractor's risk assessment process must consider these risks.

Occupational Health

Exposure of workers to occupational health hazards and risks are very common in any work environment, especially in construction. Occupational health hazards and risks exposure is a major problem and all Contractors are to ensure that proper health and hygiene measures are put in place to prevent exposure to these hazards and risks. The occupational hazards and risks may enter the body in three ways:
Inhalation through breathing e.g. cement dust;
Ingestion through swallowing maybe through food intake;
Absorption through the skin (pores) e.g. painting or use of thinners.

The contractor is required to ensure that all his personnel are medically fit prior to being allowed onto the work site.

STELLENBOSCH
STELLENBOSCH • PNIEL • FRANSCHHOEK
MUNISIPALITEIT • UMASIPALA • MUNICIPALITY

All Contractors should ensure that Occupational Hygiene surveys are conducted as per the Occupational Health and Safety Act to ensure employees are not exposed to hazards. Risk Assessments should identify areas where surveys are to be conducted.

ANNEXURE A

The Contractor shall submit this Annexure with the Tender Document.

Item No.	HSS Requirement	OHSA Requirement	Submission date
1.	Notification of Intention to Commence Construction	Construction Regulations 2014, or latest	At least 7 days before commencement on site
2.	Construction Work Permit	Construction Regulations 2014, or latest (but only comes into effect from August 2015, and only with certain size and duration projects)	At least 30 days prior to project commencement
3.	Assignment of Responsible Person to Manage Building Work	Construction Regulations 2014, or latest	Before commencement on site
4.	Competency for Responsible Persons	Client / Client Agent requirement	Before commencement on site
5.	Compensation of Occupational Injuries and Diseases Act (COIDA) 130 of 1993	COIDA latest Requirement	Before commencement on site
6.	Occupational Health and Safety Policy	Client / Client Agent requirement	At tender stage
7.	Health and Safety Organogram.	Client / Client Agent requirement	Before commencement on site
8.	Risk Assessment, Safety Plan and Fall Protection Plan, Demolition Method Statement	Client / Client Agent requirement	Before construction work commences

STELLENBOSCH
STELLENBOSCH • PNIEL • FRANSCHHOEK
MUNISIPALITEIT • UMASIPALA • MUNICIPALITY

Assignment of Contractor's Responsible Persons

ANNEXURE B - The contractor shall make the following appointments but not limited to:	
Chief Executive Officer (OSHACT 16(1)	Tel:
Contract Director/Manager (OSHACT 16(2)	Tel:
Construction Manager (CR 8(1)	Tel:
Construction Supervisor (CR 8(7)	Tel:
Assistant Construction Supervisor (CR 8(8)	Tel:
Construction Safety Officer (CR 8(5)	Tel:
Traffic Safety Officer	Tel:
Safety Representative (where > 20 employees on site)	Tel:
Temporary work Designer (CR 12(1)	Tel:
Temporary work Supervisor (CR12(2)	Tel:
Construction risk assessor (CR 9(1))	Tel:
Excavation Supervisor (CR13(1)(a)	Tel:
Demolition Supervisor (CR14(1)	Tel:
Scaffold Supervisor (CR16(1)	Tel:
Suspended Platform Supervisor (CR17(1)	Tel:
Material Hoist Inspector (CR19(8)(a)	Tel:
Material Hoist Operator (CR19(6)	Tel:
Bulk Mixing Plant Supervisor (CR20(1)	Tel:
Bulk Mixing Plant Operator (CR20(2)	Tel:
Controller of Explosive Actuated Fastening Devices Nails, Cartridges or Studs Issue and Collection (CR21(2)(g)(1)	Tel:
Construction Vehicle and Mobile Plant Operator (CR23(1)(d)(i)	Tel:
Controller of Temporary Electrical Installations (CR24(c)	Tel:
Stacking Supervisor (CR28(a)	Tel:
Fire Extinguishing Equipment Inspector (CR29(h)	Tel:
Fall Protection Plan Developer (CR 10(1)(a)	Tel:
Incident Investigator (OSHACT 9(2)	Tel:
Competent Person – Confined Spaces (GAR 5(1)	Tel:

STELLENBOSCH
STELLENBOSCH • PNIEL • FRANSCHHOEK
MUNISIPALITEIT • UMASIPALA • MUNICIPALITY

OTHER HSS REQUIREMENTS

ANNEXURE

The contractor shall comply and not be limited to the following requirements:

What	When	Output	Reference information
Awareness training (Toolbox Talks)	Weekly and before hazardous work is carried out	Attendance Register	
Health and Safety Committee Meetings	Monthly	Minutes signed by the employer (Contractor) Covering: a) Health and Safety Representative Checklist	
Health and Safety Reports	Monthly	Report covering: a) Incidents/Accidents and Investigations b) Non-conformance c) Health and Safety Training d) HIRA Updates e) Internal and External Audits	Incident reporting and investigation for The Client & Contractor form
General Inspections	As per HSS and OHSA	Report on HSS and OHSA compliance: a) Scaffolding b) Lifting Machinery c) Excavations	
General Inspections	Monthly	Covering: a) Firefighting Equipment b) Portable Electrical Equipment c) Ladders	
Record keeping	Ongoing	Covering: a) General complaints b) Fines c) General incidents d) MSDS e) Surveillance Medicals f) Inspection Register	
Permits	Before commencement with certain activities	As stipulated by the HSS and the OHSA / Construction Regulations	

STELLENBOSCH
STELLENBOSCH • PNIEL • FRANSCHHOEK
MUNISIPALITEIT • UMASIPALA • MUNICIPALITY

BASELINE RISK ASSESSMENT FOR PROJECT
Irrespective of the risk presented on site, it will be ensured that sufficient supervision is in place on site, that personnel are trained in accordance with legislation, including the requirement for site specific inductions on site to inform personnel on site of the risks and hazards applicable to the site. Site supervision is responsible for ensuring that the control measures required below are implemented on site.

	HAZARD	RISK	RISK RATING (High / Medium / Low)	MINIMUM CONTROL MEASURES
	Asphalting	Fire Burns to skin Skin disease	High	Suitable fire extinguisher to be in place prior to commencement of works Ensure competent personnel using materials and competent and trained machinery/equipment operators Ensure there is a safe place of work at all times Ensure all personnel wear suitable and sufficient personal protective equipment (PPE) Health and safety data sheet required
	Compacting and Filling	Contact with tipping materials Contact with moving plant Vehicles/personnel falling into excavations Contact with underground services	Medium	Trained banksman to control vehicles movement Only trained personnel use plant Personal Protective Equipment to be worn Personnel to stand clear as materials are being tipped Use stop blocks and signs to warn vehicles of excavations, where applicable Stand clear of plant whilst materials are being compacted Establish position of underground services and protect services from damage
	Compactor Operations	Crushing of feet	Medium	Only trained and competent personnel to use the machine Ensure operative wears steel toe cap shoes or boots at all times
	Cutting Kerbs	Saw slipping, Blade disintegrating, Noise and dust	Medium	Only trained operators to use saw and change blades. Personal Protective Equipment must be worn. Gloves, goggles, dust mask and hearing protection. People to be kept away from the work area. Work to cease if people have to pass. Sparks etc. to be directed away from people and any flammable material.
	Cutting Off Disc	Noise Cuts from machine Fire (particularly at refueling) Flying debris Blade shattering Contamination by fume created or exhaust fume	Medium	Use competent personnel. Hot works control- fire extinguisher, fire watchman. (Permit may be required) PPE to include gloves, eye protection, hearing protection Solid working position. Clear working area Correct grade of blade must be used. Good ventilation to be provided (forced if necessary). Changing of wheels to be by competent persons only Cut off discs must not be used for grinding (grinding disc thicker) Bystanders to wear hearing protection, as applicable
	Electric Tools and Electrical Installations	Electric shock Fire	Low	Electric tools and installations to be in good condition Inspect electric tools before use Do not use electric tools in wet/damp conditions Use personal protective equipment such as insulated gloves Electrical installations register to be maintained, inspected by competent person
	Fire	Injuries to workers, pedestrians, residents, road users, damage to	Medium	No littering on site which could become fire hazard, maintain site in clean condition. No fires to be lit on site. Have a working fire extinguisher at hand at all times. No smoking or naked flame near flammable substances or in

	HAZARD	RISK	RISK RATING (High / Medium / Low)	MINIMUM CONTROL MEASURES
		property through fire		unauthorised areas Ensure proper storage/use of Petrol/diesel/flammable substances – post warning notices
	Hand tools	Injuries caused by use of hand tool Impact with the tool Falls due to access problems Contamination with substance being worked	Low	Ensure: Tool is correct for job Tool is in good order and suitably sharp Personnel must be competent/instructed in tool usage and tool safely Lighting is sufficient Access is safe, working platform is secure, leading edge is guarded Operative is wearing all necessary PPE
	Hazardous Substances	Injuries to workers through use of hazardous substances, e.g.: injuries to eyes, skin, etc.	Medium	Use substances in accordance with data sheet, particularly reference protective clothing required (example: gloves, goggles, etc.) Know what First Aid measures are Have welfare facilities available for washing of hands, etc.
	Hot Works	Burns to eyes or other parts of the body	Medium	Personal Protective Equipment to include eye, skin and hearing protection Respirator maybe be required where cutting galvanized steel or anywhere else toxic fumes and gases arise. Dust can also be a problem and forced ventilation may be required.
	Kerb Laying	Nips at joints Crushing by kerbs Caustic burns	Low	Impervious gloves and barrier cream to be used to protect hands. Personnel should be aware of safe manual handling techniques when handling kerbs.
	Manual Handling of General Items	Muscular skeletal injuries if the load is too heavy or awkward Operative falling/ tripping Contamination from the substance being carried Fall of material being carried	Medium	Personnel should be aware of safe manual handling techniques Personnel to wear Personal Protective Equipment when carrying items, e.g.: safety footwear and gloves. Ensure good housekeeping against tripping/fall hazards. Operative to get assistance if load too heavy- team lift if necessary. Utilise mechanical lifting and carrying aids where possible. Personnel to ensure access equipment, ladders will take weight of operative and load being carried. Personnel to ensure item being carried is properly bonded or is not be liable to break apart whilst being manually handled.
	Noise and Dust	Breathing in dust can cause long term health problems, noise can damage hearing	Medium	Wear respiratory and hearing protection Dampen down and minimise dust where possible.
	Overhead Services (Working near)	Contact with live services causing injury to personnel Damage caused to services	Medium	Maintain safe clearance levels Establish presence of any services via proper walk through survey of site and/or means of service drawings Wear personal protective clothing Ensure height of plant/vehicles does not compromise or exceed clearance levels for overhead services Obtain information on clearance levels from service provider
	Plant or Vehicles and Equipment Operation	Workers injured by passing traffic Road users and pedestrians at risk from operation of	High	Implement traffic protection measures Trained and competent operators must be used Check plant and vehicles on daily basis before use and record inspections. Maintain vehicles in safe condition. Medical certificates of fitness required for construction plant.

	HAZARD	RISK	RISK RATING (High / Medium / Low)	MINIMUM CONTROL MEASURES
		tractor and mower Noise		Crossing of road by construction vehicles or machines must be limited to the practical minimum Plant and vehicles must be fitted with amber rotating beacons and reverse alarms. Wear appropriate protective clothing/equipment, eg: goggles, gloves, ear defenders, etc as appropriate.
	Protection of Members of Public	Injury to member of public and road users from site works	High	Barriers and signage to be in place Workers must warn away any members of public from the works Footpaths and bridges which are open to public must be closed off if in area of works or otherwise made safe so that no injury occurs to members of public Traffic turning into site – traffic management and signage as required. Signage to be on road at site entrance warning motorists that construction traffic turning into/out of site access. Keep roads free of mud where possible Refer to plant risk assessment for details on plant safety precautions NOTE: SIGNAGE TO BE POSTED ON SITE TO WARN OF CONSTRUCTION TRAFFIC MOVEMENTS. SAFE MEANS OF ACCESS FOR BOTH CONSTRUCTION TRAFFIC TO SITE AND PRIVATE HOMEOWNERS MUST BE AGREED.
	Road Construction	Risk of being struck by vehicles	High	Ensure traffic management measures in place No construction activities to commence until adequate provision made to accommodate traffic in accordance with the South African Traffic Signs Manual. Wear reflective waistcoats when working on or near the road or road shoulder as well as any other required personal protective clothing. Crossing of road by personnel must be limited to the practical minimum Use of fencing or other barriers as appropriate
	Road Working – working in or next to road	Injury to workers caused by passing traffic Injury to road users and pedestrians by works	High	Flagmen to be used where interface with construction plant with passers-by or where hazard posed by delivery vehicles turning into/out of site. Traffic management plan to be approved by Municipality and, if necessary, traffic department No construction activities to commence until adequate provision made to accommodate traffic in accordance with the South African Traffic Signs Manual. Use safety signage to warn traffic and pedestrians of construction works Where existing walk ways/pavements affected by works, must direct pedestrian traffic away to safe walking area. Wear reflective waistcoats when working on or near the road or road shoulder as well as any other required personal protective clothing. Crossing of road by personnel must be limited to the practical minimum Use of fencing or other barriers as appropriate
	Scaffold Erection/ Dismantling	Personnel falling from a height Items of scaffold falling onto personnel	High	Ensure scaffold is designed to take the imposed loads scaffolding is constructed properly scaffold is not overloaded scaffolders are fully trained

	HAZARD	RISK	RISK RATING (High / Medium / Low)	MINIMUM CONTROL MEASURES
		Scaffold collapsing onto those below		scaffolding is regularly checked by competent person and record of inspection retained. Written inspections to be recorded on weekly basis scaffolders must adhere to the safe systems of work. all fall arrest equipment to be checked and certified in good working order that ALL understand the safe system of work
	White lining	Contact with moving vehicles Fire	High	Ensure suitable and sufficient road signs are erected, as applicable Possible road or lane closure may be required – traffic management may be required Fire Extinguisher to be situated in a suitable area, use dry powder or foam

STELLENBOSCH
STELLENBOSCH • PNIEL • FRANSCHHOEK
MUNISIPALITEIT • UMASIPALA • MUNICIPALITY

ANNEXURE 6

STELLENBOSCH
STELLENBOSCH • PNIEL • FRANSCHHOEK
MUNISIPALITEIT • UMASIPALA • MUNICIPALITY

A. SEWER

PROJECT : _____ PROJECT No. : _____

CONTRACTOR : _____ DATE _____ INSPECTED BY : _____

ROAD NAME : _____ From SV _____ to SV _____

NUMBER OF MANHOLES: _____ MH _____ to MH _____

CONSTRUCTION WAYPOINTS:

- Waypoints to be checked and approved by Engineer or his representative before construction is to continue.
- Next waypoint not to proceed before all predecessing Waypoints have been completed.

1.1. MATERIALS	Contractor	Date	Engineer	Date	SPECIFICATION
1.1.1 Pipes and fittings					Sewer pipes and fittings to be Class 34 uPVC Spigot & Socket to SANS 791
1.1.2 Bedding Material					Bedding Material to be G7 selected material or sand
2.1 EXCAVATION & PIPE INSTALLATION	**Contractor**	**Date**	**Engineer**	**Date**	**SPECIFICATION**
WAYPOINT #1.1 COMPLETE?					* REFER TO SUMMARY PAGE FOR WAYPOINT STATUS
2.1.1 Check Tie In levels and positions					Expose tie in points, survey & submit to Engineer
2.1.2 Trench Width					Pipe Ø plus 0.6m
2.1.3 Pipe Position					Pipe to be centered in trench with 300mm clearance either side
2.1.4 Bedding Cradle Compaction					Cradle 100mm min. thick, Compact to 90% Mod AASHTO (100% for Sand)
2.1.5 Pipe Installation					Pipe laid with socketed side upstream
2.1.6 House Connections					End caps (1.0m-1.2 m deep), Rodding Eyes and Marker posts. .
3.1 BEDDING BLANKET & MANHOLES	**Contractor**	**Date**	**Engineer**	**Date**	**SPECIFICATION**
WAYPOINT #2.1 COMPLETE?					* REFER TO SUMMARY PAGE FOR WAYPOINT STATUS
3.1.1. Bedding Blanket					
3.1.1.1 Depth					Bedding blanket to be 300mm minimum thickness over pipe
3.2.1 Compaction					Bedding Blanket to be compacted to 90% MOD AASHTO (100% for sand)
3.1.2. Manholes					
3.1.2.1 Base slab and brickwork					Bricks to be R.O.K bricks plastered internally and externally
3.1.2.2 Precast Manholes					Precast Manholes to be approved by Engineer (see specification)
3.1.2.3 Benching					Benching to be done to engineers requirements
3.1.2.4 Top Slab					Top slab to be approved by Engineer
4.1 AS-BUILT INFORMATION	**Contractor**	**Date**	**Engineer**	**Date**	**SPECIFICATION**
WAYPOINT #3.1 COMPLETE?					* REFER TO SUMMARY PAGE FOR WAYPOINT STATUS
4.1.1 House Connections					
4.1.1 Number of Connections					See drawings
4.1.2 Positions on erf					See drawings
4.1.3 Endcap Depths at Erf Boundary					Between 1.0m & 1.2m unless otherwise indicated on drawing
4.1.2 Manholes					
4.1.2.1 Positions					See drawings
4.1.2.2 Invert Levels					See drawings
4.1.2.3 Pipe Slopes					See drawings
5.1 MAIN FILL	**Contractor**	**Date**	**Engineer**	**Date**	**SPECIFICATION**
WAYPOINT #4.1 COMPLETE?					* REFER TO SUMMARY PAGE FOR WAYPOINT STATUS
5.1.1 Material					Main fill to consist of clean sand or approved selected material
5.1.2 Compaction					Main fill to be compacted to 93% MOD AASHTO (100% for sand)
11.1 TESTING	**Contractor**	**Date**	**Engineer**	**Date**	**SPECIFICATION**
WAYPOINT #10.1 COMPLETE?					* REFER TO SUMMARY PAGE FOR WAYPOINT STATUS
11.1.1 Pressure Test					Pressure Test to SANS 1200 with BVI witness
11.1.2 Mirror					All pipes to be mirror checked and approved by Engineer
12.1 VISUAL INSPECTION	**Contractor**	**Date**	**Engineer**	**Date**	**SPECIFICATION**
WAYPOINT #11.1 COMPLETE?					* REFER TO SUMMARY PAGE FOR WAYPOINT STATUS
12.1.1 Benching					Benching to Engineers requirements
12.1.2 Mahole Rings					Manhole rings to be of good quality
12.1.3 Chimney					Chimney max height of 400mm
12.1.4 Manhole Cover					Cover approved by council representative. Hinge facing towards oncoming traffic.

COMMENTS/NOTES: _____

SEWER NETWORK FROM MH _____ TO MH _____ APPROVED BY _____ FROM BVI CONSULTING ON _____

STELLENBOSCH
STELLENBOSCH • PNIEL • FRANSCHHOEK
MUNISIPALITEIT • UMASIPALA • MUNICIPALITY

B. STORM WATER

PROJECT : _____ PROJECT No. : _____

CONTRACTOR : _____ DATE _____ INSPECTED BY : _____

ROAD NAME : _____ From SV _____ to SV _____

NUMBER OF MANHOLES: _____ MH _____ to MH _____

CONSTRUCTION WAYPOINTS:

- Waypoints to be checked and approved by Engineer or his representative before construction is to continue.
- Next waypoint not to proceed before all predecessing Waypoints have been completed.

1.2. MATERIALS	Contractor	Date	Engineer	Date	SPECIFICATION
1.2.1 Pipes, Rings and Top Slabs					Pipes to be Reinforced concrete to SABS 677 Class 100D (or as specified)
1.2.2 Bedding Material					Bedding Material to be G7 selected material or sand
2.2. EXCAVATION & INSTALLATION	**Contractor**	**Date**	**Engineer**	**Date**	**SPECIFICATION**
WAYPOINT #1.2 COMPLETE?					* REFER TO SUMMARY PAGE FOR WAYPOINT STATUS
2.2.1 Check Tie In levels and positions					Expose tie in points, survey & submit to Engineer
2.2.2 Trench Width					Pipe Ø plus 0.6m
2.2.3 Pipe Position					Pipe to be centered in trench with 300mm clearance either side
2.2.4 Bedding Cradle Compaction					Cradle 100mm min. thick, Compact to 90% Mod AASHTO (100% for Sand)
2.2.5 Pipe Installation					Pipe laid with socketed side upstream, crown to crown at manholes.
3.2. BEDDING BLANKET & MANHOLES	**Contractor**	**Date**	**Engineer**	**Date**	**SPECIFICATION**
WAYPOINT #2.2 COMPLETE?					* REFER TO SUMMARY PAGE FOR WAYPOINT STATUS
3.2.1. Bedding Blanket					
3.2.1.1 Depth					Bedding blanket to be 300mm minimum thickness over pipe
3.2.2.1 Compaction					Bedding Blanket to be compacted to 90% MOD AASHTO (100% for sand)
3.2.2. Manholes					
3.2.2.1 Base slab and brickwork					Bricks to be R.O.K bricks plastered internally and externally
3.2.2.2 Precast Concrete Rings					Precast Concrete Rings to be approved by Engineer
3.2.2.3 Benching					Benching to be done to engineers requirements
3.2.2.4 Top Slab					Top slab to be approved by Engineer
3.2.2. Catchpits					
3.2.2.1 Base slab and brickwork					Bricks to be R.O.K bricks plastered internally and externally
3.2.2.2 Grid/Kerb Inlet					Grids to be approved by Council Representative. Inlet kerbs to match kerbs.
3.2.2.3 Benching					Benching to be done to engineers requirements
4.2. AS-BUILT INFORMATION	**Contractor**	**Date**	**Engineer**	**Date**	**SPECIFICATION**
WAYPOINT #3.2 COMPLETE?					* REFER TO SUMMARY PAGE FOR WAYPOINT STATUS
4.2.2 Manholes					
4.2.2.1 Positions					See drawings
4.2.2.2 Invert Levels					See drawings
4.2.2.3 Pipe Slopes					See drawings
4.2.2 Catch Pits					
4.2.2.1 Positions					See drawings
4.2.2.2 Invert Levels					See drawings
4.2.2.3 Pipe Slopes					See drawings
5.2. MAIN FILL	**Contractor**	**Date**	**Engineer**	**Date**	**SPECIFICATION**
WAYPOINT #4.2 COMPLETE?					* REFER TO SUMMARY PAGE FOR WAYPOINT STATUS
5.2.1 Material					Main fill to consist of clean sand or approved selected material
5.2.2 Compaction					Main fill to be compacted to 93% MOD AASHTO (100% for sand)
11.2. TESTING	**Contractor**	**Date**	**Engineer**	**Date**	**SPECIFICATION**
WAYPOINT #10.2 COMPLETE?					* REFER TO SUMMARY PAGE FOR WAYPOINT STATUS
11.2.2 Mirror					All pipes to be mirror checked and approved by Engineer
12.2. VISUAL INSPECTION	**Contractor**	**Date**	**Engineer**	**Date**	**SPECIFICATION**
WAYPOINT #11.2 COMPLETE?					* REFER TO SUMMARY PAGE FOR WAYPOINT STATUS
12.2.1 Benching in Manholes					Benching to Engineers requirements
12.2.2 Concrete Rings					Concrete rings to be of good quality
12.2.3 Chimney					Chimney max height of 400mm
12.2.4 Manhole Cover					Cover approved by council representative. Hinge facing towards oncoming traffic.

COMMENTS/NOTES: _____

SEWER NETWORK FROM MH _____ TO MH _____ APPROVED BY _____ FROM BVI CONSULTING ON _____

STELLENBOSCH
STELLENBOSCH • PNIEL • FRANSCHHOEK
MUNISIPALITEIT • UMASIPALA • MUNICIPALITY

C. WATER

PROJECT : _____ PROJECT No. : _____

CONTRACTOR : _____ DATE _____ INSPECTED BY : _____

ROAD NAME : _____ From SV _____ to SV _____

NUMBER OF MANHOLES: _____ MH _____ to MH _____

CONSTRUCTION WAYPOINTS:

- Waypoints to be checked and approved by Engineer or his representative before construction is to continue.
- Next waypoint not to proceed before all predecessing Waypoints have been completed.

1.3. MATERIALS	Contractor	Date	Engineer	Date	SPECIFICATION
1.3.1 Pipes and fittings					Water Pipes to be Class 12 uPVC Spigot and Socket to SANS 996
1.3.2 Bedding Material					Bedding Material to be G7 selected material or sand
2.3. EXCAVATION & PIPE INSTALLATIOI	**Contractor**	**Date**	**Engineer**	**Date**	**SPECIFICATION**
WAYPOINT #1.3 COMPLETE?					* REFER TO SUMMARY PAGE FOR WAYPOINT STATUS
2.3.1 Check Tie In levels and positions					Expose tie in points, survey & submit to Engineer
2.3.2 Trench Width					Pipe Ø plus 0.6m
2.3.3 Pipe Position					Pipe to be centered in trench with 300mm clearance either side
2.3.4 Bedding Cradle Compaction					Cradle 100mm min. thick, Compact to 90% Mod AASHTO (100% for Sand)
2.3.5 Pipe Installation					Continuous bedding, no damaged pipes
2.3.6 Erf Connections					End caps, marker posts, saddles, etc.
3.3. BEDDING BLANKET & MANHOLES	**Contractor**	**Date**	**Engineer**	**Date**	**SPECIFICATION**
WAYPOINT #2.3 COMPLETE?					* REFER TO SUMMARY PAGE FOR WAYPOINT STATUS
3.3.1. Bedding Blanket					
3.3.1.1 Depth					Bedding blanket to be 300mm minimum thickness over pipe
3.3.2.1 Compaction					Bedding Blanket to be compacted to 90% MOD AASHTO (100% for sand)
3.3.2. Specials and Fittings					
3.3.2.1 Fire Hydrants					Check Standard Detail
3.3.2.2 Valves					Check Standard Detail
3.3.2.3 Bends					Check Standard Detail
3.3.2.4 Thrust Blocks					Check Standard Detail
4.3. AS-BUILT INFORMATION	**Contractor**	**Date**	**Engineer**	**Date**	**SPECIFICATION**
WAYPOINT #3.3 COMPLETE?					* REFER TO SUMMARY PAGE FOR WAYPOINT STATUS
4.3.1 Erf Connections					
4.3.1.1 Positions					See drawings
4.3.1.2 Number					See drawings
4.3.1.3 Depths					See drawings
4.3.2 Specials and Fittings					
4.3.2.1 Positions					See drawings
4.3.2.2 Number					See drawings
4.3.2.3 Depths					Check Standard Detail for max/min depths and cover levels.
5.3. MAIN FILL	**Contractor**	**Date**	**Engineer**	**Date**	**SPECIFICATION**
WAYPOINT #4.3 COMPLETE?					* REFER TO SUMMARY PAGE FOR WAYPOINT STATUS
5.3.1 Material					Main fill to consist of clean sand or approved selected material
5.3.2 Compaction					Main fill to be compacted to 93% MOD AASHTO (100% for sand)
11.3. TESTING	**Contractor**	**Date**	**Engineer**	**Date**	**SPECIFICATION**
WAYPOINT #10.3 COMPLETE?					* REFER TO SUMMARY PAGE FOR WAYPOINT STATUS
11.3.1 Pressure Test					Pressure Test to be executed and witnessed by Engineer as per SABS 1200
12.3 VISUAL INSPECTION	**Contractor**	**Date**	**Engineer**	**Date**	**SPECIFICATION**
WAYPOINT #11.3 COMPLETE?					* REFER TO SUMMARY PAGE FOR WAYPOINT STATUS
12.3.1 Valve/Hydrant Chambers					Hydrant Depth, cover paint, chain, clean
12.3.2 Erf Connections					No leaking, buried/exposed
12.3.3 Marker Posts					As per engineer requirements
12.3.4 Kerb Markings					As per engineer requirements

COMMENTS/NOTES: _____

WATER NETWORK FROM SV _____ TO SV _____ APPROVED BY _____ FROM BVI CONSULTING ON _____

STELLENBOSCH
STELLENBOSCH • PNIEL • FRANSCHHOEK
MUNISIPALITEIT • UMASIPALA • MUNICIPALITY

D. TELKOM & ELECTRICAL

PROJECT : _____ PROJECT No. : _____

CONTRACTOR : _____ DATE _____ INSPECTED BY : _____

ROAD NAME : _____ From SV _____ to SV _____

NUMBER OF MANHOLES: _____ MH _____ to MH _____

CONSTRUCTION WAYPOINTS:

- Waypoints to be checked and approved by Engineer or his representative before construction is to continue.
- Next waypoint not to proceed before all predecessing Waypoints have been completed.

1.4. MATERIALS	Contractor	Date	Engineer	Date	SPECIFICATION
1.4.1 Pipes/Sleeves					Electrical ducts to be Class 34 uPVC to SANS 791. Telkom - supplied.
1.4.2 Bedding Material					Bedding Material to be G7 selected material or sand
2.4. EXCAVATION & INSTALLATION	**Contractor**	**Date**	**Engineer**	**Date**	**SPECIFICATION**
WAYPOINT #1.4 COMPLETE?					* REFER TO SUMMARY PAGE FOR WAYPOINT STATUS
2.4.1 Trench Width					Pipe Ø plus 0.6m
2.4.2 Sleeves Installation					Pipe to be centered in trench with 300mm clearance either side
2.4.3 Bedding Cradle Compaction					Cradle 100mm min. thick, Compact to 90% Mod AASHTO (100% for Sand)
2.4.5 Kerb Clearance (draw wires)					Ducts to terminate 1m behind kerb in road verge.
3.4. BEDDING BLANKET & MANHOLES	**Contractor**	**Date**	**Engineer**	**Date**	**SPECIFICATION**
WAYPOINT #2.4 COMPLETE?					* REFER TO SUMMARY PAGE FOR WAYPOINT STATUS
3.4.1. Bedding Blanket					
3.4.1.1 Depth					Bedding blanket to be 300mm minimum thickness over pipe
3.4.1.2 Compaction					Bedding Blanket to be compacted to 90% MOD AASHTO (100% for sand)
3.4.2. Telkom Manholes					
3.4.2.1 Brickwork					R.O.K bricks to be used
3.4.2.2 Depths					Check Standard Detail, max 1000m
4.4. AS-BUILT INFORMATION	**Contractor**	**Date**	**Engineer**	**Date**	**SPECIFICATION**
WAYPOINT #3.4 COMPLETE?					* REFER TO SUMMARY PAGE FOR WAYPOINT STATUS
4.4.1 Electrical					
4.4.1.1 Positions					See drawings
4.4.1.2 Number					See drawings
4.4.1.3 Depths					See drawings
4.4.2 Telkom					
4.4.2.1 Positions					See drawings
4.4.2.2 Number					See drawings
4.4.2.3 Depths					See drawings
4.4.2.4 Manholes					See drawings
5.4. MAIN FILL	**Contractor**	**Date**	**Engineer**	**Date**	**SPECIFICATION**
WAYPOINT #4.4 COMPLETE?					* REFER TO SUMMARY PAGE FOR WAYPOINT STATUS
5.4.1 Material					Main fill to consist of clean sand or approved selected material
5.4.2 Compaction					Main fill to be compacted to 93% MOD AASHTO (100% for sand)
11.4. TESTING	**Contractor**	**Date**	**Engineer**	**Date**	**SPECIFICATION**
WAYPOINT #10.4 COMPLETE?					* REFER TO SUMMARY PAGE FOR WAYPOINT STATUS
11.4.1 Replace Draw wires					Testing and approval letter from Telkom
12.4. VISUAL INSPECTION	**Contractor**	**Date**	**Engineer**	**Date**	**SPECIFICATION**
WAYPOINT #11.4 COMPLETE?					* REFER TO SUMMARY PAGE FOR WAYPOINT STATUS
12.4.1 Draw wires					Draw wire for every ductrequired
12.4.2 Marker Posts					Marker post with draw wires at every duct bank
12.4.3 Manhole Cover Levels					To Engineers requirements
12.4.4 Kerb Markings					Kerb Marking at every duct crossing

COMMENTS/NOTES: _____

TELKOM & ELECTR. FROM SV _____ **TO SV** _____ **APPROVED BY** _____ **FROM BVI CONSULTING ON** _____

STELLENBOSCH
STELLENBOSCH • PNIEL • FRANSCHHOEK
MUNISIPALITEIT • UMASIPALA • MUNICIPALITY

E. ROADS

PROJECT : _____ PROJECT No. : _____

CONTRACTOR : _____ DATE _____ INSPECTED BY : _____

ROAD NAME : _____ From SV _____ to SV _____

CONSTRUCTION WAYPOINTS:

- Waypoints to be checked and approved by Engineer or his representative before construction is to continue.
- Next waypoint not to proceed before all predecessing Waypoints have been completed.

6. SELECTED LAYER	Contractor	Date	Engineer	Date	SPECIFICATION
WAYPOINT #5 COMPLETE?					* REFER TO SUMMARY PAGE FOR WAYPOINT STATUS
6.1 Check Tie In levels and positions					Identify tie in points, survey & submit to Engineer
6.2 In-Situ Sub-Grade					In-Situ Sub-grade to be inspected and approved by Engineer
6.3 Selected Material					Selected Material to be approved by Engineer (G7 or Clean Sand)
6.4 Thickness					Selected Layer to be 300mm thick (or as specified)
6.5 Levels and Cross Fall					Dips to be recorded for approval and slopes verified on site
6.6 Compaction					Selected Layer to be compacted to 93% MOD AASHTO (100% for sand)

7. SUB-BASE LAYER	Contractor	Date	Engineer	Date	SPECIFICATION
WAYPOINT #6 COMPLETE?					* REFER TO SUMMARY PAGE FOR WAYPOINT STATUS
7.1 Material					Sub-Base to be G5 material tested and approved by Engineer.
7.2 Thickness					Sub-Base to be 150mm thick (or as specified)
7.3 Width					Sub-Base to be constructed to 150mm behind back of kerb
7.4 Levels and Cross Fall					Dips to be recorded for approval and slopes verified on site
7.5 Compaction					Sub-Base layer to be compacted to 95% MOD AASHTO

8. KERBS	Contractor	Date	Engineer	Date	SPECIFICATION
WAYPOINT #7 COMPLETE?					* REFER TO SUMMARY PAGE FOR WAYPOINT STATUS
8.1 Quality/Tolerances					Kerbs to approved by Engineer before installation
8.2 Backing Mix					Concrete Mix to be tested and approved by Engineer (15MPa)
8.3 Concrete Backing and Bedding					Check Standard Details for required heights, etc.
8.4 Soft Joints					Soft Joint at every 10 meters
8.5 Transition Kerbs					Transition kerbs to create straight line with road edge.

9. BASE LAYER	Contractor	Date	Engineer	Date	SPECIFICATION
WAYPOINT #8 COMPLETE?					* REFER TO SUMMARY PAGE FOR WAYPOINT STATUS
9.1 Material					Base to be G4 material tested and approved by Engineer.
9.2 Thickness					Base thickness according to road class (125mm/150mm)
9.3 Levels and Cross Fall					Dips to be recorded for approval and slopes verified on site
9.4 Moisture Content					Moisture Content to be tested and approved by Engineer
9.5 Loose Material					Base to be broomed and cleared of loose/foreign material

10. ASPHALT MIX DESIGN	Contractor	Date	Engineer	Date	SPECIFICATION
WAYPOINT #9 COMPLETE?					* REFER TO SUMMARY PAGE FOR WAYPOINT STATUS
10.1 Mix Design					Mix design to be submitted to Engineer for approval before prime is applied

13. PRIME	Contractor	Date	Engineer	Date	SPECIFICATION
WAYPOINT #12 COMPLETE?					* REFER TO SUMMARY PAGE FOR WAYPOINT STATUS
13.1 Material					Colprime - E (or as specified)
13.2 Distribution/Application					Application according to Engineers requirements
13.3 Drying Time					Minimum 6 hours drying time for Colprime-E (Varies with material)

14. PREMIX	Contractor	Date	Engineer	Date	SPECIFICATION
WAYPOINT #13 COMPLETE?					* REFER TO SUMMARY PAGE FOR WAYPOINT STATUS
14.1 Premix Arrival Temperature					Premix to be 120°C to 150°C on arrival. Covered in trucks.
14.2 Hot-Box Samples					Hot-Box samples to be taken every 100 tons (± 4 trucks)
14.3 Joints					Joint cut straight with roller cutter or saw cutter and tack coated
14.4 Thickness					Thickness of premix controlled with gauge during application (30mm/40mm)
14.5 Placing Temperature					No compaction on premix below 90°C
14.6 Compaction					Compacted to 95% Marshall (30mm)and 93% RICE (40mm) densities
14.7 Core Samples					Cores to be taken as per Engineers instruction and submitted for approval

COMMENTS/NOTES: _____

ROAD WAY FROM SV _____ TO SV _____ APPROVED BY _____ FROM BVI CONSULTING ON _____

STELLENBOSCH
STELLENBOSCH • PNIEL • FRANSCHHOEK
MUNISIPALITEIT • UMASIPALA • MUNICIPALITY

WAYPOINT SUMMARY

PROJECT : _____ PROJECT No. : _____

CONTRACTOR : _____ DATE _____ INSPECTED BY : _____

ROAD NAME : _____ From SV _____ to SV _____

CONSTRUCTION WAYPOINTS:

- Waypoints to be checked and approved by Engineer or his representative before construction is to continue.
- Next waypoint not to proceed before all predecessing Waypoints have been completed.

1. PIPE TRENCH MATERIALS	* REFER TO SHEETS *A, B, C & D* FOR WAYPOINTS BREAKDOWN				
WAYPOINT **1.1** COMPLETE? (SEWER)	YES		DATE		COMMENTS / NOTES
WAYPOINT **1.2** COMPLETE? (S/WATER)	YES		DATE		COMMENTS / NOTES
WAYPOINT **1.3** COMPLETE? (WATER)	YES		DATE		COMMENTS / NOTES
WAYPOINT **1.4** COMPLETE? (ELEC. & GPO)	YES		DATE		COMMENTS / NOTES

WAYPOINT REACHED? SIGNED: CONTRACTOR _____ ENGINEER _____

2. EXCAVATION AND PIPE INSTALLATION	* REFER TO SHEETS *A, B, C & D* FOR WAYPOINTS BREAKDOWN				
WAYPOINT **2.1** COMPLETE? (SEWER)	YES		DATE		COMMENTS / NOTES
WAYPOINT **2.2** COMPLETE? (S/WATER)	YES		DATE		COMMENTS / NOTES
WAYPOINT **2.3** COMPLETE? (WATER)	YES		DATE		COMMENTS / NOTES
WAYPOINT **2.4** COMPLETE? (ELEC. & GPO)	YES		DATE		COMMENTS / NOTES

WAYPOINT REACHED? SIGNED: CONTRACTOR _____ ENGINEER _____

3. BEDDING BLANKET & STRUCTURES	* REFER TO SHEETS *A, B, C & D* FOR WAYPOINTS BREAKDOWN				
WAYPOINT **3.1** COMPLETE? (SEWER)	YES		DATE		COMMENTS / NOTES
WAYPOINT **3.2** COMPLETE? (S/WATER)	YES		DATE		COMMENTS / NOTES
WAYPOINT **3.3** COMPLETE? (WATER)	YES		DATE		COMMENTS / NOTES
WAYPOINT **3.4** COMPLETE? (ELEC. & GPO)	YES		DATE		COMMENTS / NOTES

WAYPOINT REACHED? SIGNED: CONTRACTOR _____ ENGINEER _____

4. AS-BUILT INFORMATION	* REFER TO SHEETS *A, B, C & D* FOR WAYPOINTS BREAKDOWN				
WAYPOINT **4.1** COMPLETE? (SEWER)	YES		DATE		COMMENTS / NOTES
WAYPOINT **4.2** COMPLETE? (S/WATER)	YES		DATE		COMMENTS / NOTES
WAYPOINT **4.3** COMPLETE? (WATER)	YES		DATE		COMMENTS / NOTES
WAYPOINT **4.4** COMPLETE? (ELEC. & GPO)	YES		DATE		COMMENTS / NOTES

WAYPOINT REACHED? SIGNED: CONTRACTOR _____ ENGINEER _____

5. MAIN FILL	* REFER TO SHEETS *A, B, C & D* FOR WAYPOINTS BREAKDOWN				
WAYPOINT **5.1** COMPLETE? (SEWER)	YES		DATE		COMMENTS / NOTES
WAYPOINT **5.2** COMPLETE? (S/WATER)	YES		DATE		COMMENTS / NOTES
WAYPOINT **5.3** COMPLETE? (WATER)	YES		DATE		COMMENTS / NOTES
WAYPOINT **5.4** COMPLETE? (ELEC. & GPO)	YES		DATE		COMMENTS / NOTES

WAYPOINT REACHED? SIGNED: CONTRACTOR _____ ENGINEER _____

STELLENBOSCH
STELLENBOSCH • PNIEL • FRANSCHHOEK
MUNISIPALITEIT • UMASIPALA • MUNICIPALITY

6. SELECTED LAYER	* REFER TO SHEET *E* FOR WAYPOINTS BREAKDOWN				
WAYPOINT 6 COMPLETE?	YES		DATE		COMMENTS / NOTES
WAYPOINT REACHED?	SIGNED: CONTRACTOR		ENGINEER		
7. SUB-BASE LAYER	* REFER TO SHEET *E* FOR WAYPOINTS BREAKDOWN				
WAYPOINT 7 COMPLETE?	YES		DATE		COMMENTS / NOTES
WAYPOINT REACHED?	SIGNED: CONTRACTOR		ENGINEER		
8. KERBS	* REFER TO SHEET *E* FOR WAYPOINTS BREAKDOWN				
WAYPOINT 8 COMPLETE?	YES		DATE		COMMENTS / NOTES
WAYPOINT REACHED?	SIGNED: CONTRACTOR		ENGINEER		
9. BASE LAYER	* REFER TO SHEET *E* FOR WAYPOINTS BREAKDOWN				
WAYPOINT 9 COMPLETE?	YES		DATE		COMMENTS / NOTES
WAYPOINT REACHED?	SIGNED: CONTRACTOR		ENGINEER		
10. PREMIX MIX DESIGN	* REFER TO SHEET *E* FOR WAYPOINTS BREAKDOWN				
WAYPOINT 10 COMPLETE?	YES		DATE		COMMENTS / NOTES
WAYPOINT REACHED?	SIGNED: CONTRACTOR		ENGINEER		
11. TESTING PIPELINES	* REFER TO SHEETS *A, B, C & D* FOR WAYPOINTS BREAKDOWN				
WAYPOINT 11.1 COMPLETE? (SEWER)	YES		DATE		COMMENTS / NOTES
WAYPOINT 11.2 COMPLETE? (S/WATER)	YES		DATE		COMMENTS / NOTES
WAYPOINT 11.3 COMPLETE? (WATER)	YES		DATE		COMMENTS / NOTES
WAYPOINT 11.4 COMPLETE? (ELEC. & GPO)	YES		DATE		COMMENTS / NOTES
WAYPOINT REACHED?	SIGNED: CONTRACTOR		ENGINEER		
12. VISUAL INSPECTION - PIPE NETWORKS	* REFER TO SHEETS *A, B, C & D* FOR WAYPOINTS BREAKDOWN				
WAYPOINT 12.1 COMPLETE? (SEWER)	YES		DATE		COMMENTS / NOTES
WAYPOINT 12.2 COMPLETE? (S/WATER)	YES		DATE		COMMENTS / NOTES
WAYPOINT 12.3 COMPLETE? (WATER)	YES		DATE		COMMENTS / NOTES
WAYPOINT 12.4 COMPLETE? (ELEC. & GPO)	YES		DATE		COMMENTS / NOTES
WAYPOINT REACHED?	SIGNED: CONTRACTOR		ENGINEER		
13. PRIME	* REFER TO SHEET *E* FOR WAYPOINTS BREAKDOWN				
WAYPOINT 13 COMPLETE?	YES		DATE		COMMENTS / NOTES
WAYPOINT REACHED?	SIGNED: CONTRACTOR		ENGINEER		
14. PREMIX	* REFER TO SHEET *E* FOR WAYPOINTS BREAKDOWN				
WAYPOINT 14 COMPLETE?	YES		DATE		COMMENTS / NOTES
WAYPOINT REACHED?	SIGNED: CONTRACTOR		ENGINEER		
15. FINAL INSPECTION	* FINAL INSPECTION ON COMPLETION AND APPROVAL OF WAYPOINTS *1-13*				
WAYPOINT 15 COMPLETE?	YES		DATE		COMMENTS / NOTES

ALL WAYPOINTS FOR SV _____ TO SV _____ APPROVED BY _____ FROM BVI CONSULTING ON _____

SIGNED: CONTRACTOR _____ ENGINEER _____

SEWER PRESSURE TEST

Project Name: _____ Project Number: _____

Date of Test: _____ Tested By: _____

Pipeline Size: _____ Erf Connections incl: Yes □ No □

Pipeline Position: FSMH _____ to _____

	Initial Bvi
Type of test required: water □ air □	
Pipe line position in relation to water table: below water table □ above water table □	
Inspected test set-up, guage connected to pipe and all valves open.	
Release pressure by removing plug that is not connected to test pump.	
Chimney height and cover opening direction.	
Mirror line	

Pressure:	Time:

Approved:
Yes □ No □

BVi Signature: Contractor Signature:

Project Name: _____ Project Number: _____

Date of Test: _____ Tested By: _____

Pipeline Size: _____ Erf Connections incl: Yes □ No □

Pipeline Position: FSMH _____ to _____

	Initial Bvi
Type of test required: water □ air □	
Pipe line position in relation to water table: below water table □ above water table □	
Inspected test set-up, guage connected to pipe and all valves open.	
Release pressure by removing plug that is not connected to test pump.	
Chimney height and cover opening direction.	
Mirror line	

Pressure:	Time:

Pressure Test Approved:
Yes □ No □

BVi Signature: Contractor Signature:

STELLENBOSCH
STELLENBOSCH • PNIEL • FRANSCHHOEK
MUNISIPALITEIT • UMASIPALA • MUNICIPALITY

WATER PRESSURE TEST

Project Name: _____ Project Number: _____

Date of Test: _____ Tested By: _____

Pipeline Description: Class: _____ Size: _____ Type: _____

Pipeline Position: _____

	Initial Bvi
Inspect test setup and ensure gauge are connected to pipe and take note of ball value position.	
Ensure end caps in are place, values are open and hydrants are closed before reticulation is tested .	
Initial Pressure: _____ kpa Time Started: _____	
Final Pressure: _____ kpa Time Finished: _____	
Open downstream valve to ensure that entire test section was under pressure.	
If pressure dropped during test determine actual leakage rate achieved during test and calculate permissible leakage from specification.	

Notes / Sketches (draw reticulation section that was tested indicating pump position and which hydrants were opened after testing. All calculation must also be shown here.)

Pressure Test Approved:

Yes ☐ No ☐

BVi Signature: Contractor Signature:

ASPHALT QUALITY CONTROL

Project Name: _____

Date of Test: _____

Name: _____

The following to be indicated on drawing: Sampling positions and Days Work

Registration Number	Position				Temperature (°C)				Sampling	Asphalt Thickness	Density
	SV (Start)	SV (End)	Road name	Lane (L/R)	Base	Asphalt Delivery	After Screed	After tandem roller	Type / sample number	mm	On site (Troxler)

STELLENBOSCH
STELLENBOSCH • PNIEL • FRANSCHHOEK
MUNISIPALITEIT • UMASIPALA • MUNICIPALITY

ANNEXURE 7

STELLENBOSCH
STELLENBOSCH • PNIEL • FRANSCHHOEK
MUNISIPALITEIT • UMASIPALA • MUNICIPALITY

Geo Services Consultants
+27 82 0805 801
tbiggsgeo@gmail.com
2 Valley Road
Hout Bay
Cape Town
7806

BVI CONSULTING ENGINEERS
Edison Square
PO Box 86
Century City
7446

31st August 2020

Email: franciscusg@bviwc.co.za ; cpt@bvi.co.za

ATTENTION: MR FRANCISCUS GREEFF

Dear Sir

BSM39/18-RS-A.45 MAIN ROAD INTERSECTION IMPROVEMENT: REALIGNMENT OF THE R44/R310 AND ALEXANDER STREET JUNCTION, STELLENBOSCH

1. INTRODUCTION AND TERMS OF REFERENCE

Geo Services was appointed by BVI Consulting Engineers to undertake a geotechnical investigation for the proposed Realignment of the R44/R310 and Alexander Street Junction, Stellenbosch. It was requested by Mr Franciscus Greeff of BVI Consulting Engineers, by way of a letter of appointment dated 26th May 2020, (Ref 34092.00C-L-024) that the Stellenbosch Road Alignment be investigated in accordance with the proposal submitted by Geo Services on 6th April 2020. A set of layout plans for the proposed roadworks and details of the required geotechnical services were provided and the scope of work outlined by quotation 555-21-08 from the undersigned, dated the 6th April 2020.

The primary focus of the material investigation was to determine the nature, distribution and geotechnical properties of the shallow soil along the proposed alignment route by studying available geotechnical information and conducting soil profiling's, dynamic cone penetration tests and soil laboratory tests on disturbed samples. Furthermore, to determine the suitability of the transported and in-situ layers for use during construction. This report documents the results of the investigation and provides recommendations on material use for road layer works.

2. AVAILABLE INFORMATION

The following information was used for the purposes of the investigation:

- 1 : 250 000 Geological Series titled "Cape Town 3318" as compiled by the South African Geological Survey, 1986
- Google Earth imagery of the road junction
- Dwg file with 34092.00C-100-02 (Test Pit Setting Out Points), received from Mr. F Greeff
- Project Locality and layout pdf

3. ROUTE DESCRIPTION

The proposed realignment route of the R44/R310 and Alexander Street Junction, Stellenbosch route is orientated south west- north east and is bounded by the Prasa rail-line running parallel to the western side of the road and residential and commercial properties along the eastern side.

Topographically, the road junction is flat and is approximately 134 meters above sea level. The investigation was undertaken over a distance of approximately 500 m.

4. METHODS OF INVESTIGATION

The fieldwork was carried out on 16th July 2020 and comprised the manual excavation of nine trial pits. The test pits were carried out along the alignment and on each side of the road junction to determine the subgrade conditions. In addition, nine dynamic cone penetrometer (DCP) tests were carried out adjacent to the test pits to broadly determine the material properties and compaction characteristics of the underlying materials. Figure 2, Site Plan shows the positions of the test pits and dynamic cone penetrometer tests.

4.1. Test Pits and Soil Profiling

Nine test pits, designated TP1, TP2, TP3, TP4, TP5, TP6, TP8, TP9 and TP10 were excavated at the approximate positions requested by the engineer. The depths ranged from 0.3 m (TP1) to 1.5 m (TP8) below existing ground level, with an average depth of 0.8 m. The original number of test pits required was ten, however due to the shallow soil conditions and numerous high and medium voltage buried cables along the western side of the road TP7 was shifted approximately 5 m westwards where it struck a near surface concrete slab. The positions of several other pits were also shifted to avoid the numerous buried electrical, water and communication services and subsurface concrete slabs. The test pits were profiled by an engineering geologist and profiled in terms of moisture, colour, consistency, structure, soil type/rock type and origin (MCCSSO) according to Jennings et.al (1973). Following the profiling and sampling of the test pits, the disturbed ground was manually backfilled but without proper compaction.

The soil profiles are attached as Appendix A and the positions of the test pits are indicated on Figure 2. TP3 was moved northwards by approximately 10 m from the Alexander Road island.

4.2. Dynamic Cone Penetrometer (DCP) Tests

Nine dynamic cone penetrometer tests, designated DCP1, DCP2, DCP3, DCP4, DCP5, DCP6, DCP8, DCP9 and DCP10 were carried out adjacent to the test pits to depths ranging from 0,3 m (DCP1) to 1,5 m below existing ground level with an average depth of 1,1 m, to broadly determine the CBR values and inferred undrained shear strengths for the road subgrade.

The results of the DCP tests, plotted as blow count versus depth are presented in Appendix B.



Figure 1: Locality map showing sections of road requiring re-alignment (in green).

4.3. Sampling and Laboratory Testing

In order to evaluate the engineering properties of the soils and their suitability as subgrade and fill materials during the construction of road, selected samples were collected from the test pits and submitted for testing to Control Geoscience laboratory, Cape Town. The following laboratory tests were performed in order to determine the geo-mechanical properties of the relevant soil horizons:

- Road and Foundation Indicator Tests
- Mod AASHTO Density Tests
- California Bearing Ratio's (CBR)

The results of the laboratory tests are given in Appendix C and summarised in **Table 2, 3 and 4**.



Figure 2 : Image showing Zones 1 and 2 and trial pit locations. (NB, some positions were shifted slightly due to presence of buried services and concrete slabs).

5. GEOLOGY

The general geology in the Stellenbosch road junction site comprises an underlying layer of fluvial sediment deposited by the Klippies and Jonkershoek Rivers (Eerste River tributaries). These fluvial sediments generally comprise coarse sand and rounded quartzitic boulders and cobbles. The fluvial sediment in-turn overlies Tygerberg Formation (Malmesbury Group) shale (Nt on geological map) and Kuils River Batholith (Cape Granite Suite). Past excavations in the area have exposed paleo channels with incised depths of up to10 m in places (refer to Figure 4, Geological Map).

The site geology comprises a covering layer of colluvial and alluvial sediments with thicknesses ranging between 0.3 m to >1.5 m. Fill material was encountered along the Zone 2, western section of road and within the road islands (TP6 to TP10). The upper 0.25 m generally comprises loose to medium dense, slightly organic, silty sand. This grades into a dense to very dense, slightly clayey, gravelly, silty sand layer with thickness ranging from 0.3 m to 1.5 m. A prominent feature of the site is the 0.3 to 0.5 m thick layer comprising rounded sandstone boulders, cobbles and gravels set in a medium dense to

dense silty sand matrix. This boulder bed is in turn underlain by medium dense to very dense, slightly clayey, silty sand.

The groundwater level ranges in depth from 0.5 m to > 1.5 m below ground level (mbgl) and is expected to experience seasonal variation.

Table 1 Typical empirical values and strength characteristics for soils

COHESIONLESS SOILS					**Relative**	**Soil Modulus E (MPa)**		
Description	**Dry Density (kg/m^3)**		**N - Value**		**Density**	Sand Gravel	Sand	Sandy Silt
Very Loose	0	1,450	0	5	<0.2	25	12	6
Loose	1,450	1,600	5	10	0.2 - 0.4	50	25	12
Medium Dense	1,600	1,750	10	30	0.4 - 0.6	100	50	25
Dense	1,750	1,900	30	50	0.6 - 0.8	200	100	50
Very Dense	1,900	2,400	50	100	>0.8	400	200	100

COHESIVE SOILS	**Undrained Shear**				**Soil Modulus E (MPa)**		
Description	**Strength (kN/m^3)**		**N - Value**		Sandy Silt	Silt	Silty Clay
Very Soft	0	20	0	2	6	3	2
Soft	20	40	2	4	12	6	3
Firm	40	80	4	8	25	12	6
Stiff	80	150	8	15	50	25	12
Very Stiff	150	350	15	30	100	50	25
	UCS = 2 C_u		C_u = Undrained shear strength				

COMPRESSIBILITY & COLLAPSE			*Carter, M and Bentley, S. P., Correlations of Soil Properties, 1991.*			
	Coeff vol. Compr. m_v (m^2/kN)		**Trouble Index**	**Collapse Potential**		
V.High Compressibility		1.50E-03	Very Severe	> 20.1%		V.Highly Collapsible
High Compressibility	1.50E-03	3.00E-04	Severe	10.1%	20.0%	Highly Collapsible
Mod. Compressibility	3.00E-04	1.00E-04	Trouble	5.1%	10.0%	Mod. Collapsible
Low Compressibility	1.00E-04	3.00E-05	Mod. Trouble	1.1%	5.0%	Slightly Collapsible
V.Low Compressibilty	3.00E-05	1.00E-05	No problem	< 1%		V.Slightly Collapsible

STELLENBOSCH
STELLENBOSCH • PNIEL • FRANSCHHOEK
MUNISIPALITEIT • UMASIPALA • MUNICIPALITY

Table 2 Laboratory test results for each test pit

TEST PIT	TP2	TP3	TP3	TP4	TP9
SAMPLE	32896	32897	32894A	32898	32895
DEPTH (m)	0.35-0.8	0.1-0.4	0.4-09	0.1-0.5	0.8-1.5
DESCRIPTION MATERIAL	Wet, dark brown, dense to very dense, silty clayey SAND (SM-GM) with rounded cobbles and boulders . WT at 0.75m	Slightly moist, dark brown, dense to very dense, silty clayey SAND (SM) with pebbles . WT at 0.9m	Wet, dark brown, dense to very dense, silty gravelly SAND (SM-GM) with cobbles and boulders. WT at 0.9m	Slightly moist, dark brown, medium dense, massive, fine-medium grained, silty clayey SAND (SM), colluvium/Fill . WT at 1.45m	Moist to wet, dark brown, dense becoming very dense,-medium to coarse grained, silty gravelly SAND (SM). Fill. No WT encountered.
Field Consistency	MD	MD	D-VD	MD	MD
Field Moisture	SM-M	SM-M	D-SM	SM	SM
Unified Soil Class	SM	SM	SM-GM	SM	SM
TRH 4 Classification	G7-G8	G8	G6	G7-G8	G6
AASHTO Classification	A-2-4	A-2-4	A-2-4	A-2-4	A-2-4

Table 3: Laboratory test results for each test pit (continued)

SIEVE SIZE (mm)	GRADING ANALYSIS (% PASSING)				
TEST PIT	TP2	TP3	TP3	TP4	TP9
DEPTH (m)	0.35-0.8	0.1-0.4	0.4-09	0.1-0.5	0.8-1.5
53.000			100		100
19.000			97		97
13.200			96		96
4.750	100	100	92	100	93
2.000	99	98	89	99	87
0.425	92	85	75	92	59
0.300	84	74	68	80	52
0.150	5	50	48	46	36
0.075	34	35	30	26	21
0.050	30	26	22	21	18
0.002	10	10	7	6	5
GRAVEL >2.000	1	2	11	1	13
SAND >0.06 < 2.000	68	69	64	76	68
SILT >0.002 <0.06	21	19	18	17	14
CLAY < 0.002	10	10	7	6	5
GRADING MODULUS	2.25	2.18	1.94	2.17	1.67

Table 4: Laboratory determined soil constraints

TEST PIT	TP2	TP3	TP3	TP4	TP9
DEPTH (m)	0.35-0.8	0.1-0.4	0.4-09	0.1-0.5	0.8-1.5
LIQUID LIMIT	0	15	16	10	15
PLASTIC LIMIT	0	9	10	10	9
PLASTICITY INDEX	0	6	6	0	6
PI (whole ample)	0	4	4	0	3
LINEAR SHRINKAGE	0	2	2	0	2
EXPANSIVENESS	Non	Non	Non	Non	Non
Actual m/c (%)	Non	Non	Non	Non	Non
Max Mod Aashto			2086		2134
OMC (%)			8		7.6
CBR @ 90% MOD			12		13
CBR @ 95% MOD			29		30
CBR @ 100% MOD			70		80
% Swell - 90% MOD			1.5		0.9

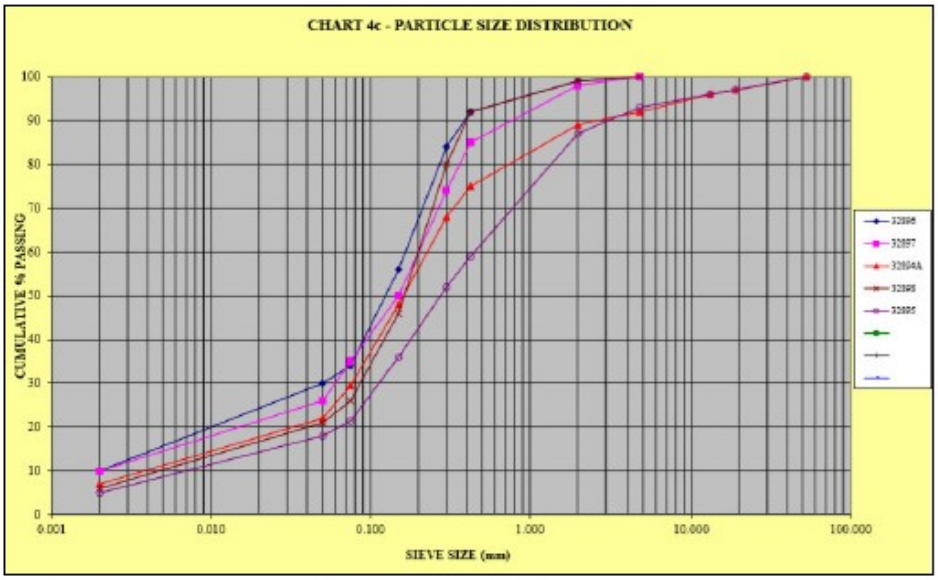

Figure 3 Grain size distribution graph of samples tested

6. SURFACE WATER AND GROUNDWATER

The eastern section of the site (Zone 1: TP1 to TP5,) encountered water seepage at an average depth of 0.75 mbgl. The colluvial and alluvial materials encountered at TP3 and TP5 showed moist to very moist conditions while slow groundwater seepage was encountered in TP1, TP2 and TP4.

No groundwater seepage was encountered in the test pits excavated on the western section of the proposed road alignment (Zone 2), apart from TP6 which showed slow water seepage.

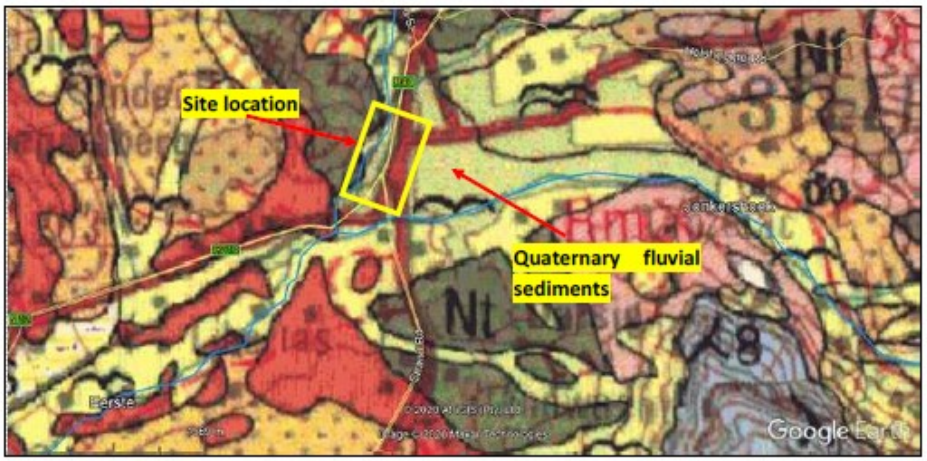

Figure 4: 1:25 000 Geological map of the Stellenbosch area and site location (yellow rectangle). Greyish-brown Nt units represent Tygerberg Formation; pink/orange units represent – Cape Peninsula Batholith; light blue unit– Peninsula Formation and yellow units – represent Quaternary transported / alluvial sediment.

Table 5: categorising the test pits and geology encountered in Zone 1 and Zone 2.

Zone	TP No.	Generalised underlying geology
1	1, 2, 3, 4 & 5	**0 – 0.2 m**: Loose to medium dense organic, silty clayey sand, colluvium. **0.2 – 0.4 m**: Medium dense to dense silty, clayey sand, alluvium. **0.4 – 0.9 m**: Dense to very dense boulder/cobble layer with dense silty sand matrix, alluvium. **0.9 – 1.5 m**: Medium to very dense, slightly clayey, silty gravelly sand, alluvium. **Groundwater:** Average 0.75 mbgl (ranges between 0.45 – 1.45 m)
2	6, 8, 9 & 10	**0 – 0.8 m**: Medium dense to dense silty sand with scattered gravel, Fill. **0.8 – > 1.5 m**: Medium dense to very dense gravelly silty sand, Fill. **Groundwater:** Slow seepage encountered at TP6 (0.4 m), No water encountered in TP8, TP 9, TP 10.

7. DISCUSSION OF SOIL RESULTS AND GEOTECHNICAL ASPECTS

The materials encountered along the route of the proposed road have been classified in terms of their suitability for use in road construction on the basis of field observations and laboratory testing.

It should be borne in mind that the classification, discussion and recommendations of the materials usage below is based on the selected laboratory testing for the samples taken from excavated test pits, in situ field observations and DCP test results and the classifications may vary under actual field conditions.

7.1. Dynamic Cone Penetrometer Tests summary

Hand-held 1,5 m deep Dynamic Cone Penetrometer (DCP) tests were conducted along the proposed road alignment. The DCP test is done by driving a small 60° cone into the ground by means of an 8kg guided sliding hammer that is dropped over a height of 1,0m. The penetration is then measured based on the number of blows it takes to drive 0,1m interval of the rod into the ground using the hammer. The DCP value is a crude approximation of the consistency and undrained shear strength of the soil and the in situ inferred CBR values can also be obtained.

Most of the DCP's conducted along the proposed road alignment recorded medium dense to very dense consistencies with refusal occurring at approximately 1.1 m below surface level and TP refusal averaged 0.8 m. The reason for the shallow refusal depths in Zone 1 was due to obstruction by boulders and gravels. It should be noted that DCP results in gravelly, rocky soils may not produce realistic values of consistency and shear strength.

7.2. Excavatability

The excavation characteristics of the different soil horizons have been evaluated according to the South African Bureau of Standards standardised excavation classification for earthworks (SABS – 1200D) and earthworks (small works – SABS 1200DA) as indicated in Table 6 below.

In terms of this classification and the in-situ soil/rock consistencies as profiled, the relationships given below are generally applicable. For specific excavation requirements refer to the soil profiles in Appendix A.

Based on the excavation depths achieved by the manual digging, Soft Excavation Class conditions can be expected for Zone 1 to approximate depths of 0.5 mbgl, and Intermediate Excavation Class conditions can be expected from 0.5 to 1.5 mbgl due to boulders and very dense material at depth.

Soft Excavation Class conditions for Zone 2 sections can also be expected to depths of approximately 1 mbgl and Intermediate Excavation can be expected at depths from 1 m to 1.5 mbgl due to the very dense material at depth and the sporadic occurrences of concrete slabs and fragments. (TP7 and TP9).

7.3. Classification of Materials and Recommended Usage

As discussed above, the route has been zoned as Zone 1, which refers to the open grassed area east of the R310, and Zone 2 which refers to the engineered roadway section west of the R310. The materials encountered in Zone 1 and Zone 2 are classified in Table 7 below.

Zone 1: Contains a high water table in certain sections that will impact the compactability and strength of in-situ and fill materials and will require good pavement layer drainage especially in wet months. If the engineering design requires, in-situ material is cut to spoil and removed to the depth of the dense to very dense boulder/gravelly layer (approximately 0.6 mbgl), the removed material should be stockpiled and used as either selected layer or subgrade material. However, if additional good quality construction base course and upper sub-base materials are required for pavement construction, these will require importing from commercial sources or from an approved and tested borrow pit.

Zone 2: Subgrade materials for the west section of road and the island sections comprise suitable selected layer and/or subgrade construction material. The groundwater levels are on average at least 1.5 mbgl.

Table 6: Excavation classes (SANS 1200D)

SAMPLE POSITION	SIMPLIFIED DESCRIPTION OF TYPICAL MATERIAL PROPERTIES
Soft excavation	*Material that can be efficiently removed or loaded, without prior ripping, by means of a bulldozer, tractor-scraper, track type front-end loader or back-acting excavator without the use of pneumatic tools such as paving breakers.*
Intermediate excavation	*Material that can be efficiently ripped by a bulldozer fitted with a single-tine ripper or with a back-acting excavator of flywheel power exceeding **0,10 kW per mm** of tined-bucket width or the use of pneumatic tools before removal by equipment equivalent to that specified above.*
Hard rock excavation	*Excavation in material that cannot, before removal, be efficiently ripped by a bulldozer. This is material that cannot be efficiently removed without blasting or without wedging and splitting.*
Boulder excavation (Class A)	*Excavation in material containing more than 40 % by volume boulders of size in the range of 0,03-20m3, in a matrix of soft material or smaller boulders.*
Boulder excavation (Class B)	*Excavation in material containing 40 % or less by volume boulders of size in the range of 0,03-20m3, in a matrix of soft material or smaller boulders and which require individual drilling and blasting in order to be loaded by a track type front-end loader or back-acting excavator .*

7.4. Inferred Subgrade Conditions

Zone 1 and 2 subgrade materials are summarised in Table 7 and commented on below. The materials of G6 quality are suitable for use as subbase and/or selected layers. The G7 and G8 materials are suitable for subgrade, selected layer and general fills. For use as selected layers, especially where roads are being widened, it is recommended that materials be compacted to 95 percent modified AASHTO dry density in lifts of 300mm to prevent differential settlement. Any boulders and fragments larger than 2/3 of the layer thickness or 63 mm in diameter (whichever is the smallest) must be removed prior to compaction.

It is recommended that additional laboratory testing be carried out during construction of the proposed road alignment. Table 7 and Table 8 should be used as a guideline for materials usage on construction of pavement structure.

7.5. Bearing Capacity and Expected Settlement

General and broad guidelines of expected bearing capacities, CBR values and expected settlements for different soil consistencies are presented in the tables below. As DCP tests are the basis of the data collected in this investigation, CBR values have been correlated from DCP results and are shown in Table 9 (Du Plessis & Paige-Green, 2009). However, it should be noted that although DCP tests can be used to derive guideline in-situ empirical CBR values, further consolidation and strength testing is recommended for more accurate bearing capacity and settlement results.

Table 7: Recommended Material Usage

Zone	TP No	Description	Classification Details	Recommended Use	Recommended Modifications
IN-SITU SUBGRADE					
Zone 1	TP1 to TP5	Colluvium and alluvium. Silty organic sand. (Depth 0 – 0.2m)	<G9	Not suitable for use in road construction due to organic content grading modulus being less than a value of 0,75.	Material and fill will need to be cut to spoil and replaced with better quality material.
		Alluvium. Silty clayey sand. (Depth 0.2 – 0.5 m)	G7 – G8	Inferred G7 to G8. If G8, then will make an acceptable subgrade, otherwise will need to be undercut and re-placed will better quality material	Mechanical stabilization by addition of tested graded crusher stone or borrow pit soils
		Alluvium, silty gravelly sand. (Depth 0.5 – 1.5 m)	G6 -G7	The deeper alluvial materials encountered in TP3 (below 0,4-0.9m) proved to be of G6 class construction material in quality and may be selectively used as acceptable subgrade or selected layer material. Max size boulders 2/3 layer thickness or 63mm whichever is the smallest,	N/A
Zone 2	TP6 to TP10	Silty sand, Fill. (Depth 0 – 0.8 m)	G7-G8	Inferred G7-G8. If G8, then will make an acceptable subgrade, The deeper fill materials encountered in TP9 (below 0,7m) proved to be of G6 class construction material in quality and may be used as acceptable subgrade and general fills.	N/A
		0.8 – 1.5m: silty gravelly sand, Fill.	G6-G7	Inferred G7 or less. If G7, then will make an acceptable subgrade or selected layer material. The deeper fill materials encountered in TP9 (below 0,7m) proved to be of G6 class construction material in quality and may be used as acceptable subgrade and general fills. Max size boulders 2/3 layer thickness or 63mm whichever is the smallest,	N/A

Table 8 Guideline on materials usage for construction of pavement structure

Material Quality	Recommended Usage
G1 to G4	Suitable for use as base layer
G5 to G6	Suitable for use as subbase
G6 to G8	Suitable for use as selected layer
G8 to G9	Suitable for use as subgrade
<G9	Not suitable for use in road construction

Indicative characteristic settlement and compressibility parameters are shown below in Table 10 **Note**: the figures for typical rock/soil properties in Table 10 have been developed by experienced practitioners but have not been published.

During the site investigations an inspection of the current road condition was carried out and no visible signs of settlement or cracks were evident. Discussions regarding the original road design and construction were held with the site engineer who confirmed that no problems had arisen due to

excessive settlement or bearing capacity. The subgrade soils will tend to undergo immediate or rapid settlement due to the predominantly granular nature of the soils.

7.6. Table 9: Guidelines for correlated CBR values for different soil consistencies

Cohesionless Soil Consistency	DN Value (mm/blow)	CBR
Loose	75 - 30	< 5
Medium Dense	30 - 12.5	5 - 17
Dense	12.5 - 5	17 - 53
Very dense	< 5	> 53

Table 10 Typical empirical soil properties and bearing capacities

COMPRESSIBILITY & COLLAPSE *Carter, M and Bentley, S. P., Correlations of Soil Properties, 1991.*

	Coeff vol. Compr. m_v (m^2/kN)		Trouble Index	Collapse Potential		
V.High Compressibility		1.50E-03	Very Severe	> 20.1%		V.Highly Collapsible
High Compressibility	1.50E-03	3.00E-04	Severe	10.1%	20.0%	Highly Collapsible
Mod. Compressibility	3.00E-04	1.00E-04	Trouble	5.1%	10.0%	Mod. Collapsible
Low Compressibility	1.00E-04	3.00E-05	Mod. Trouble	1.1%	5.0%	Slightly Collapsible
V.Low Compressibility	3.00E-05	1.00E-05	No problem	< 1%		V.Slightly Collapsible

TYPICAL ROCK/SOIL PROPERTIES & ESTIMATED BEARING CAPACITES

Rock / Soil Density Description	UCS (MPa)	Bearing Capacity	Mod. Ratio	E_s (MPa)	Friction Angle φ°	Cohesion Cu / C'	N-Value	Dry Unit Wt kg/m³
Extremely hard rock	200	Function of UCS & jointing intensity ①	600	120,000	Rock joint / structure friction	Rock joint / structure cohesion	Refer to Schmidt hardness or point load index	> 40
Very hard rock	150		450	67,500				35 - 40
Hard rock	100		375	37,500				30 - 35
Medium hard rock	50		325	16,250				27 - 30
Soft rock	10		300	3,000	Rock mass friction	Rock mass cohesion		25 - 27
Very soft rock	1		275	275				23 - 25
Very hard soil/decomp.	0.5		250	125			> 80	21.5 - 23
Very dense sand/gravel		400	250	100	44	-	50 - 80	19.5-21.5
Very dense silt/sand		300	225	68	40	-		
Very stiff clay/silt		200	200	40	22	80 / 15	15-30	17.5
Dense sand/gravel		300	225	68	40	-	30-50	17.5-19.5
Dense silt/sand		200	200	40	36	-		
Stiff clay/silt		150	175	26	20	40 / 10	8 - 15	15.5-17.5
Medium dense sand/gravel		200	200	40	36	-	10 - 30	15.5-17.5
Medium dense silt/sand		150	175	26	32	-		
Firm clay/silt		75	150	11	18	20 / 5	4 - 8	14.0-15.5
Loose sand/gravel		150	175	26	32	-	5 - 10	14.0-15.5
Loose silt/sand		75	150	11	28	-		
Soft clay/silt		35	125	4	17	10 / 2	2 - 4	12.5-14.0
Very loose sand/gravel		75	150	11	28	-	<5	<14.0
Very loose silt/sand		35	125	4	24	-		
Very soft clay/silt		20	100	2	16	<5 / 0	<2	<12.5

8. CONCLUSION

This report presents the findings of a material investigation for the construction of the proposed realignment of the R44/R310 and Alexander Street junction in Stellenbosch. The total length of the proposed roadworks is approximately 300 to 400 m.

The route is underlain by both colluvial, alluvial and fill materials. These are in-turn underlain by residual soils and weathered shales of the Tygerberg Formation. The soils encountered across the site comprise largely of silty clayey sands and silty gravelly sands, all of which are suitable for use as either subgrade, selected layer or subbase materials. A dominant boulder bed was encountered in the eastern section of the site at approximate depths of 0.6m below ground level. The soils were generally non expansive with low swell percentages and low plasticity.

Moderate groundwater seepage was encountered in Zone 1 test pits (TP1 to TP5) at an average depth of 0.7 mgbl, and slow seepage was encountered in TP6 (Zone 2) at a depth of 0.45 m below existing ground level.

Of significance are the high groundwater levels in Zone 1 which will require adequate provision for subsoil drainage and surface run off to prevent ingress of water into the layerworks.

It is considered that soft excavations class conditions in terms of SABS 1200 can be anticipated in Zone 1 to depths of 0.5 mbgl and intermediate excavations boulder excavation class conditions can be expected from 0.6 m to in excess of 1,5 mbgl. In Zone2, soft excavations class conditions and be expected to depths of 1 m and intermediate excavations class conditions from 1 m to 1.5 mbgl.

Finally, the soil conditions described in this report refer specifically to those encountered at the test pits and DCP tests carried out along the route. It is therefore possible that conditions at variance with those discussed above may be encountered elsewhere along the road section in question. In this regard it is important that a specialist carry out periodic inspections of the road during construction to ensure that any variation in the anticipated ground conditions can be assessed and revised recommendations made to avoid unnecessary delays and expense.

We trust that this meets your immediate requirements in terms of in-situ conditions, classification of materials and development recommendations. However, should you have any queries please do not hesitate to contact us in this regard.

Yours faithfully,

Tim Biggs



(Electronic Signature) Date: 31 August 2020

Engineering Geologist Pr.Sci.Nat.

Geo Services Consultants

9. BIBLIOGRAPHY

1. JENNINGS, J.E., BRINK, A.B.A. & WILLIAMS, A.A.B. Revised Guide to Soil Profiling for Civil Engineering Purposes in Southern Africa. Trans. SA. Inst. Civil Engrs. Vol.15, No.1, 1973.
2. BRINK, A.B.A. Engineering Geology of Southern Africa. Volume 1 - The First 2000 Million Years of Geological Time, Building Publications, Pretoria, 1981, 319pp.
3. BRAJA, M. DAS. Principles of Geotechnical Engineering. 3rd Ed., PWS Publishing Co., Boston, 1993, 662pp.
4. WEAVER, J.M. Geological Factors Significant in the Assessment of Rippability. The Civil Engineer in S. Africa, December 1975, pp 313-316.
5. SABS 1200D Earthworks: Standardised Specification For Civil Engineering Construction. 1982.
6. TRH 14: 1985. Guidelines for Road Construction Materials. Dept. of Transport South Africa. Committee of State Road Authorities, Technical Recommendations for Highways. Pretoria, pp 57. Reprint 1989.
7. SOUTH AFRICAN INSTITUTE OF CIVIL ENGINEERS - Code of Practice: Foundations and Superstructures for Single Storey Residential Buildings of Masonry Construction; Joint Structural Division, 1995, Johannesburg.
8. SOUTH AFRICAN INSTITUTE of ENGINEERING GEOLOGISTS - Guidelines for Urban Engineering Geological Investigations; Pretoria 1997; South Africa.
9. DU PLESSIS, L., & PAIGE-GREEN, P. (2009). The use and interpretation of the dynamic cone penetrometer (DCP) test. Pretoria: CSIR Built Environment.

STELLENBOSCH
STELLENBOSCH • PNIEL • FRANSCHHOEK
MUNISIPALITEIT • UMASIPALA • MUNICIPALITY

APPENDIX A: SOIL PROFILE

GEO SERVICES Geotechnical Consultants

TEST PIT LOG

TEST NO: **TP01**

PROJECT:	Stellenbosch Road Upgrade	**NORTHING:** 13,656.853	**START DATE:** 15/07/20
PROJECT NO:	TB2001	**EASTING:** 3,756,662.416	**END DATE:** 15/07/20
LOCATION:	Intersection Strand/Adam Tas/Alexander Rds	**ELEVATION:** 0.0	**LOGGED BY:** T Biggs

DEPTH (m)	DCP (mm/ Blow)	SAMPLE No. & TEST	PROFILE	MATERIAL DESCRIPTION	USCS	DPL / DPSH BLOWS PER 30cm	REMARKS
0.0	11 22 13 4			Colluvium: Slightly moist, dark brown, medium dense, organic, rooted, silty SAND with pebbles (rounded).	SM		
0.5				Alluvium Gr: Moist, dark brown, dense to very dense, rooted, silty SAND with cobbles and pebbles (rounded, slightly weathered SST).	SM_ GM		Seepage - watertable at 0.65m
1.0							
1.5							

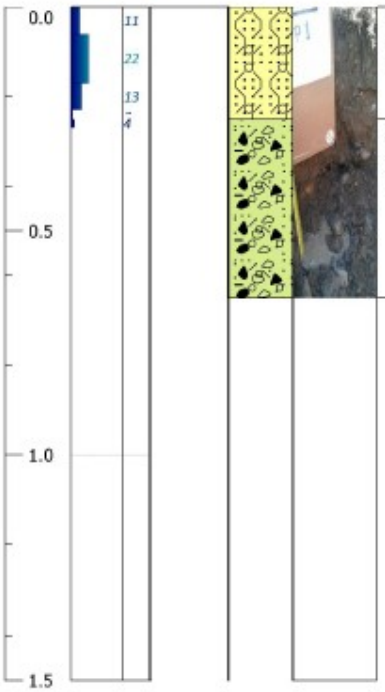

PAGE 1 OF 1

CONTRACTOR: Static text - name
GWL DEPTH: 0.65
DRILLER/OPERATOR: Static text - operator
MACHINE USED: Hand dug

SANDY MATERIALS

Description	Relative Density %	SPT N-value (blows/300mm)	DCP (mm/blow)
Very loose		<4	>25
Loose	0 - 40	4 - 10	20 - 25
Medium dense	40 - 70	10 - 30	12.5 - 20
Dense	70 - 90	30 - 50	5 - 12.5
Very dense	90 - 100	>50	<5

STELLENBOSCH
STELLENBOSCH • PNIEL • FRANSCHHOEK
MUNISIPALITEIT • UMASIPALA • MUNICIPALITY

GEO SERVICES
Geotechnical Consultants

TEST PIT LOG

TEST NO: **TP02**

PROJECT: Realignment R44/R310/Alexander St Junction
NORTHING: 13,717.74
START DATE: 16/07/2020

PROJECT NO: 20200716-054
EASTING: 3,756,693.112
END DATE: 16/07/2020

LOCATION: Intersection Strand/Adam Tas/Alexander Rds
ELEVATION: 0.0
LOGGED BY: T Biggs

DEPTH (m)	DCP (mm/ Blow)	SAMPLE No. & TEST	PROFILE	MATERIAL DESCRIPTION	USCS	DPL / DPSH BLOWS PER 30cm	REMARKS
0.0	22	0.2		Colluvium: Slightly moist, dark brown, medium dense, organic, rooted, silty SAND with rounded pebbles	SM		
	21	0.3 FI					
	34						
	8	0.4		Alluvium Gr: Wet, dark brown, dense to very dense, rooted, silty SAND with rounded, sl weathered SST cobbles and boulders	SM_ GM		0.75m - Seepage - Watertable
0.5	14	FI					
	30						
	refusal	0.7					EOH - 0.85m
	4						
	10						
	12						
	6						

PAGE 1 OF 1

CONTRACTOR: Static text - name
GWL DEPTH: 0.75
DRILLER/OPERATOR: Static text - operator
MACHINE USED: TLB

SANDY MATERIALS

Description	Relative Density %	SPT N-value (blows/300mm)	DCP (mm/blow)
Very loose		<4	>75
Loose	0 - 40	4 - 10	30 - 75
Medium dense	40 - 70	10 - 30	12.5 - 30
Dense	70 - 90	30 - 50	5 - 12.5
Very dense	90 - 100	>50	<5

STELLENBOSCH
STELLENBOSCH • PNIEL • FRANSCHHOEK
MUNISIPALITEIT • UMASIPALA • MUNICIPALITY

GEO SERVICES
Geotechnical Consultants

TEST PIT LOG

TEST NO: TP03

PROJECT: Realignment R44/R310/Alexander St Junction
NORTHING: 13,743.14
START DATE: 15/07/2020

PROJECT NO: 20200716-054
EASTING: 3,756,634.114
END DATE: 15/07/2020

LOCATION: Intersection Strand/Adam Tas/Alexander Rds
ELEVATION: 0.0
LOGGED BY: T Biggs

DEPTH (m)	DCP (mm/ Blow)	SAMPLE No. & TEST	PROFILE	MATERIAL DESCRIPTION	USCS	DPL / DPSH BLOWS PER 30cm	REMARKS
0.0	22			Colluvium: Slightly moist, dark brown, medium dense, organic, rooted, fine to medium grained, silty SAND. Colluvium/Fill	SM		
	31	0.3 FI					
	40	0.5					
0.5	12	0.5 RI/MOD/ CBR		Alluvium + Cobbles: Wet, yellow brown, dense to very dense, rooted, silty, clayey SAND with cobbles and boulders (rounded, slightly weathered SST). Alluvium. EOH: Refusal	SM_ GM		0.9m - Seepage - Watertable
	11	0.9					EOH - 0.9m
1.0							

PAGE 1 OF 1

CONTRACTOR: Static text - name
GWL DEPTH: 0.9
DRILLER/OPERATOR: Static text - operator
MACHINE USED: Hand dug

SANDY MATERIALS

Description	Relative Density %	SPT N-value (blows/300mm)	DCP (mm/blow)
Very loose		<4	>75
Loose	0 - 40	4 - 10	30 - 75
Medium dense	40 - 70	10 - 30	12.5 - 30
Dense	70 - 90	30 - 50	5 - 12.5
Very dense	90 - 100	>50	<5

STELLENBOSCH
STELLENBOSCH • PNIEL • FRANSCHHOEK
MUNISIPALITEIT • UMASIPALA • MUNICIPALITY

GEO SERVICES
Geotechnical Consultants

TEST PIT LOG

TEST NO: TP04

PROJECT: Realignment R44/R310/Alexander St Junction	**NORTHING:** 13,696.222	**START DATE:** 15/07/2020
PROJECT NO: 20200716-054	**EASTING:** 3,756,658.091	**END DATE:** 15/07/2020
LOCATION: Intersection Strand/Adam Tas/Alexander Rds	**ELEVATION:** 0.0	**LOGGED BY:** T Biggs

DEPTH (m)	DCP (mm/ Blow)	SAMPLE No. & TEST	PROFILE	MATERIAL DESCRIPTION	USCS	DPL / DPSH BLOWS PER 30cm	REMARKS
0.0	19 17	0.2 FI 0.4		Colluvium: Slightly moist, dark brown, medium dense, organic, rooted, massive, fine-medium grained, silty SAND, Colluvium/Fill	SM		
0.5	22 31 42			Alluvium Gr: Moist to wet, dark brown, medium dense, organic, rooted, fine-medium grained, silty SAND with cobbles and boulders (rounded, slightly weathered SST). Alluvium.	SM_ GM		
1.0	38 6 25 10 14 17 25			Alluvium + Cobbles: Moist to wet, dark brown, dense becoming medium dense with depth, fine-medium grained, silty SAND with pebbles and cobbles. Alluvium. EOH 1.45m	SM-GM		1.45m - Seepage - Watertable EOH - 1.45m
1.5	26						

PAGE 1 OF 1

CONTRACTOR: Static text - name
DRILLER/OPERATOR: Static text - operator
MACHINE USED: Hand dug
GWL DEPTH: 1.45

SANDY MATERIALS

Description	Relative Density %	SPT N-value (blows/300mm)	DCP (mm/blow)
Very loose		<4	>25
Loose	0 - 48	4 - 10	20 - 25
Medium dense	40 - 70	10 - 30	12.5 - 20
Dense	70 - 90	30 - 50	5 - 12.5
Very dense	90 - 100	>50	<5

STELLENBOSCH
STELLENBOSCH • PNIEL • FRANSCHHOEK
MUNISIPALITEIT • UMASIPALA • MUNICIPALITY

GEO SERVICES
Geotechnical Consultants

TEST PIT LOG

TEST NO: TP05

PROJECT: Realignment R44/R310/Alexander St Junction	**NORTHING:** 13,663.004	**START DATE:** 15/07/2020
PROJECT NO: 20200716-054	**EASTING:** 3,756,576.826	**END DATE:** 15/07/2020
LOCATION: Intersection Strand/Adam Tas/Alexander Rds	**ELEVATION:** 0.0	**LOGGED BY:** T Biggs

DEPTH (m)	DCP (mm/ Blow)	SAMPLE No. & TEST	PROFILE	MATERIAL DESCRIPTION	USCS	DPL / DPSH BLOWS PER 30cm	REMARKS
0.0	33			Colluvium: Moist, brown, loose to medium dense, organic, rooted, fine-medium grained, slightly clayey, silty SAND, Colluvium/Fill	SM		
	41			Colluvium: Moist to wet, brown, medium dense, medium-coarse- grained, silty SAND with pebbles.Colluvium. EOH 0.5m	SM		Seepage - G/W at approx 0.45m
0.5	32						EOH - 0.5m
	5 & 5 7						
	11						
1.0	20						
	5 & 3						
1.5							

PAGE 1 OF 1

CONTRACTOR: Static text - name

DRILLER/OPERATOR: Static text - operator

MACHINE USED: Hand dug

GWL DEPTH:

SANDY MATERIALS

Description	Relative Density %	SPT N-value (blows/300mm)	DCP (mm/blow)
Very loose		<4	>75
Loose	0 - 40	4 - 10	30 - 75
Medium dense	40 - 70	10 - 30	12.5 - 30
Dense	70 - 90	30 - 50	5 - 12.5
Very dense	90 - 100	>50	<5

STELLENBOSCH
STELLENBOSCH • PNIEL • FRANSCHHOEK
MUNISIPALITEIT • UMASIPALA • MUNICIPALITY

GEO SERVICES
Geotechnical Consultants

TEST PIT LOG

TEST NO: TP06

PROJECT: Realignment R44/R310/Alexander St Junction
NORTHING: 13,686.91
START DATE: 15/07/2020

PROJECT NO: 20200716-054
EASTING: 3,756,592.536
END DATE: 15/07/2020

LOCATION: Intersection Strand/Adam Tas/Alexander Rds
ELEVATION: 0.0
LOGGED BY: T Biggs

DEPTH (m)	DCP (mm/ Blow)	SAMPLE No. & TEST	PROFILE	MATERIAL DESCRIPTION	USCS	DPL / DPSH BLOWS PER 30cm	REMARKS
0.0	54			Fill2: Moist, grey brown, loose to medium dense,organic, rooted, medium to coarse grained, slightly clayey, silty SAND	SM		
0.5	24 13 5 6 7 14 3 18			Fill1: Moist, yellow brown, medium dense becoming dense with depth, slightly clayey, silty SAND. Fill. EOH 0.65m, refusal	SM		EOH - 0.65m
1.0							
1.5							

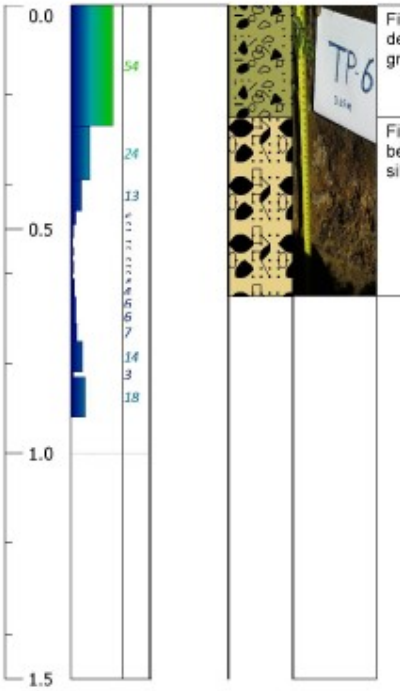

PAGE 1 OF 1

CONTRACTOR: Static text - name
GWL DEPTH:
DRILLER/OPERATOR: Static text - operator
MACHINE USED: Hand dug

SANDY MATERIALS

Description	Relative Density %	SPT N-value (blows/300mm)	DCP (mm/blow)
Very loose		<4	>75
Loose	0 - 40	4 - 10	30 - 75
Medium dense	40 - 70	10 - 30	12.5 - 30
Dense	70 - 90	30 - 50	5 - 12.5
Very dense	90 - 100	>50	<5

STELLENBOSCH
STELLENBOSCH • PNIEL • FRANSCHHOEK
MUNISIPALITEIT • UMASIPALA • MUNICIPALITY

GEO SERVICES
Geotechnical Consultants

TEST PIT LOG

TEST NO: TP08

PROJECT: Realignment R44/R310/Alexander St Junction **NORTHING:** 13,758.249 **START DATE:** 15/07/2020

PROJECT NO: 20200716-054 **EASTING:** 3,756,693.642 **END DATE:** 15/07/2020

LOCATION: Intersection Strand/Adam Tas/Alexander Rds **ELEVATION:** 0.0 **LOGGED BY:** T Biggs

DEPTH (m)	DCP (mm/ Blow)	SAMPLE No. & TEST	PROFILE	MATERIAL DESCRIPTION	USCS	DPL / DPSH BLOWS PER 30cm	REMARKS
0.0	22			Fill2: Slightly moist, yellowish grey brown, medium dense to dense, fine to coarse grained, silty SAND, Fill	SM		
0.5	14 11 12 10 13 10 16 12 12 11 8 7 5 5 5 6 7 5 5 5 14 16 19 R 1			Fill1: Slightly moist, ochre brown, dense, slightly clayey, silty, gravelly SAND. Fill.	SM		
1.0				FILL..: Moist, dark brown, medium dense, slightly clayey, silty, gravelly SAND. Fill. EOH 1.45m,	SM_ SC		
1.5							EOH - 1.45m

PAGE 1 OF 1

CONTRACTOR: Static text - name

DRILLER/OPERATOR: Static text - operator

MACHINE USED: Hand dug

GWL DEPTH:

SANDY MATERIALS

Description	Relative Density %	SPT N-value (blows/300mm)	DCP (mm/blow)
Very loose		<4	>75
Loose	0 - 40	4 - 10	30 - 75
Medium dense	40 - 70	10 - 30	12.5 - 30
Dense	70 - 90	30 - 50	5 - 12.5
Very dense	90 - 100	>50	<5

STELLENBOSCH
STELLENBOSCH • PNIEL • FRANSCHHOEK
MUNISIPALITEIT • UMASIPALA • MUNICIPALITY

GEO SERVICES
Geotechnical Consultants

TEST PIT LOG

TEST NO: TP09

PROJECT: Realignment R44/R310/Alexander St Junction
NORTHING: 13,758.249
START DATE: 15/07/2020

PROJECT NO: 20200716-054
EASTING: 3,756,729.276
END DATE: 15/07/2020

LOCATION: Intersection Strand/Adam Tas/Alexander Rds
ELEVATION: 0.0
LOGGED BY: T Biggs

DEPTH (m)	DCP (mm/ Blow)	SAMPLE No. & TEST	PROFILE	MATERIAL DESCRIPTION	USCS	DPL / DPSH BLOWS PER 30cm	REMARKS
0.0				Fill2: Slightly moist, grey brown, medium dense, organic, rooted, fine-medium grained, slightly clayey, silty SAND, with pebbles and rubble fragments, Fill.	SM		
0.5							
1.0				FILL..: Moist to wet, dark brown, dense becoming very dense,-medium to coarse grained SAND with cobbles and boulders (rounded, slightly weathered SST).Fill.(concrete slab against sidewall) EOH: Refusal.	SM		
1.5							EOH - 1.5m

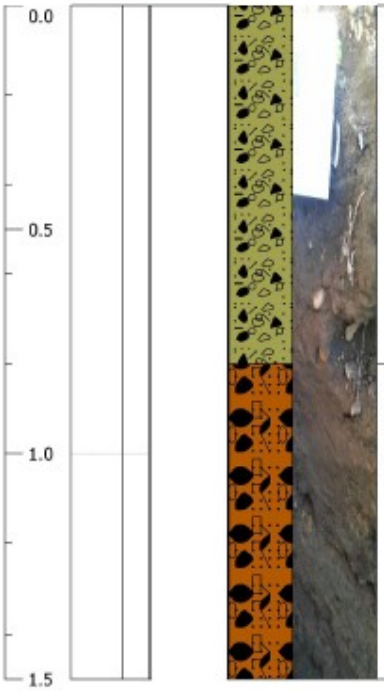

PAGE 1 OF 1

CONTRACTOR: Static text - name
GWL DEPTH:
DRILLER/OPERATOR: Static text - operator
MACHINE USED: Hand dug

SANDY MATERIALS

Description	Relative Density %	SPT N-value (blows/300mm)	DCP (mm/blow)
Very loose		<4	>75
Loose	0 - 40	4 - 10	30 - 75
Medium dense	40 - 70	10 - 30	12.5 - 30
Dense	70 - 90	30 - 50	5 - 12.5
Very dense	90 - 100	>50	<5

STELLENBOSCH
STELLENBOSCH • PNIEL • FRANSCHHOEK
MUNISIPALITEIT • UMASIPALA • MUNICIPALITY

GEO SERVICES
Geotechnical Consultants

TEST PIT LOG

TEST NO: **TP10**

PROJECT: Realignment R44/R310/Alexander St Junction
NORTHING: 13,730.666
START DATE: 15/07/2020

PROJECT NO: 20200716-054
EASTING: 3,756,798.454
END DATE: 15/07/2020

LOCATION: Intersection Strand/Adam Tas/Alexander Rds
ELEVATION: 0.0
LOGGED BY: T Biggs

DEPTH (m)	DCP (mm/ Blow)	SAMPLE No. & TEST	PROFILE	MATERIAL DESCRIPTION	USCS	DPL / DPSH BLOWS PER 30cm	REMARKS
0.0	23			Fill2: Moist, grey brown, medium dense, rooted, slightly clayey, silty SAND,Fill.	SM		
	32						
	18			Fill1: Moist, orangey brown, medium dense to dense, coarse, silty SAND, Fill	SM		
0.5	9 8 9 9						
	13						
	13						
	17						
	11						
	17			FILL..: Slightly moist, dark brown, dense becoming very dense,-medium to coarse grained, SAND with cobbles (at bottom of TP). Fill. EOH:1.5m, Refusal.	SM		
1.0	15						
	6 9 5 2						
1.5							EOH - 1.5m

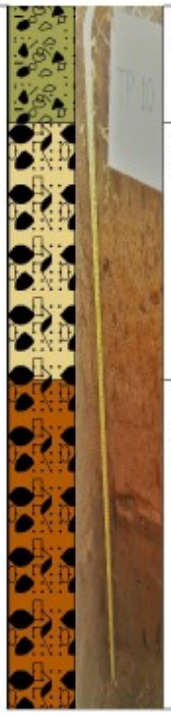

PAGE 1 OF 1

CONTRACTOR: Static text - name
GWL DEPTH:
DRILLER/OPERATOR: Static text - operator
MACHINE USED: Hand dug

SANDY MATERIALS

Description	Relative Density %	SPT N-value (blows/300mm)	DCP (mm/blow)
Very loose		<4	>75
Loose	0 - 40	4 - 10	30 - 75
Medium dense	40 - 70	10 - 30	12.5 - 30
Dense	70 - 90	30 - 50	5 - 12.5
Very dense	90 - 100	>50	<5

STELLENBOSCH
STELLENBOSCH • PNIEL • FRANSCHHOEK
MUNISIPALITEIT • UMASIPALA • MUNICIPALITY

APPENDIX B: DCP RESULTS

DCP 1

Number of Blows	Penetration per Blow (mm/blow)	Corrected Depth (cm)	Classification
0			
5	11	5.6	Dense
10	22	16.6	Medium Dense
15	13	23.2	Medium Dense
20	2	24.3	V. Dense
25	2	25.3	V. Dense
30	4	27.3	V. Dense
35			
40			
45			
50			
55			
60			
65			
70			
75			
80			
85			
90			
95			
100			
105			
110			
115			

SOIL CONSISTENCIES: SPT N- Value vs DCP

CONSISTENCY	SPT (blows /300mm)	DCP (mm/blow)
Very loose	<4	>75
Loose	4-10	10 – 75
Medium dense	10 – 30	12.5 – 30
Dense	30 - 50	5 – 12.5
Very dense	>50	2 - 5

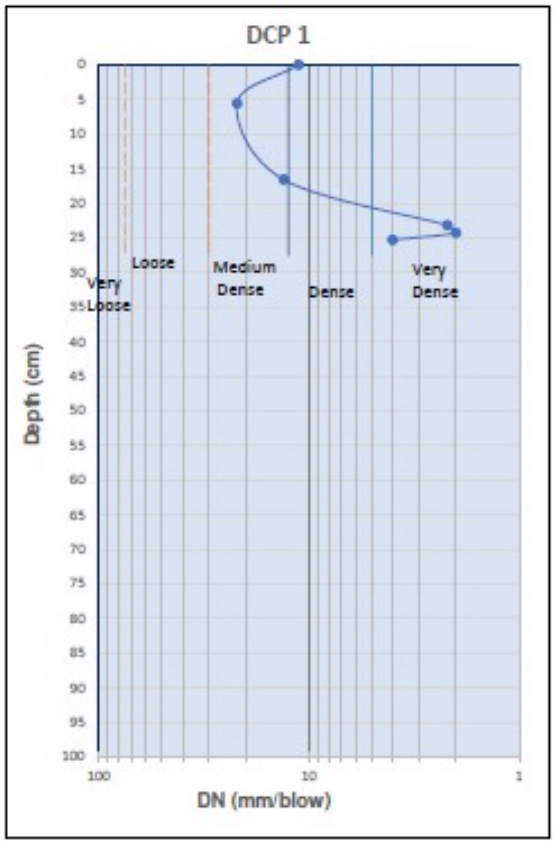

STELLENBOSCH
STELLENBOSCH • PNIEL • FRANSCHHOEK
MUNISIPALITEIT • UMASIPALA • MUNICIPALITY

DCP 2

Number of Blows	Penetration per Blow (mm/blow)	Corrected Depth (cm)	Classification
0			
5	22	10.8	Medium Dense
10	21	21.2	Medium Dense
15	34	38	Loose
20	8	42	Dense
25	14	49	Medium Dense
30	30	63.8	Medium Dense
35	5	66.1	V. Dense
40	4	67.9	V. Dense
45	3	69.5	V. Dense
50	3	71	V. Dense
55	2	72.1	V. Dense
60	4	74	V. Dense
65	10	78.9	Dense
70	12	83	Dense
75	6	88	Dense
80			
85			
90			
95			
100			
105			
110			
115			

SOIL CONSISTENCIES: SPT N- Value vs DCP

CONSISTENCY	SPT (blows /300mm)	DCP (mm/blow)
Very loose	<4	>75
Loose	4- 10	30 – 75
Medium dense	10 – 30	12.5 – 30
Dense	30 - 50	5 – 12.5
Very dense	>50	2 - 5

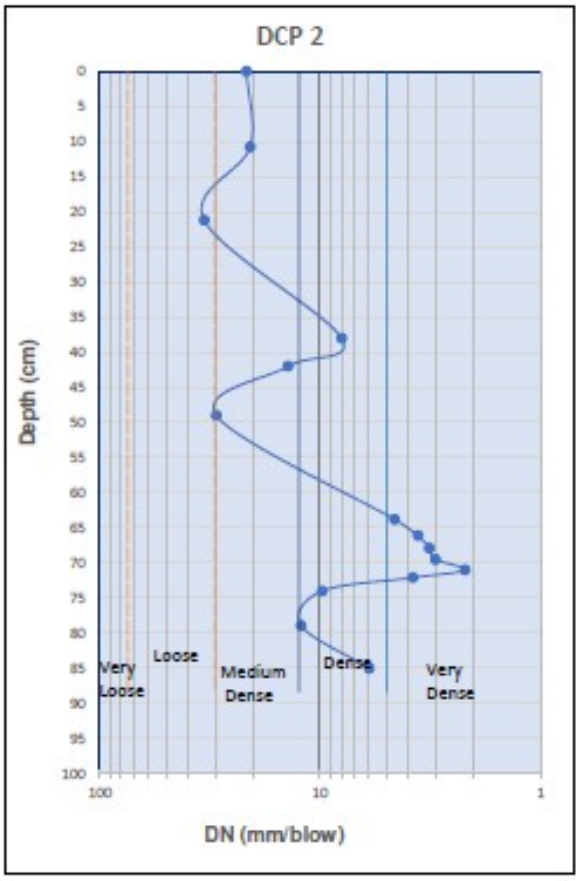

STELLENBOSCH
STELLENBOSCH • PNIEL • FRANSCHHOEK
MUNISIPALITEIT • UMASIPALA • MUNICIPALITY

DCP 3

Number of Blows	Penetration per Blow (mm/blow)	Corrected Depth (cm)	Classification
0			
5	22	11	Medium Dense
10	31	26.6	Loose
15	40	46.5	Loose
20	12	52.5	Dense
25	1	53	V. Dense
30	1	53.5	V. Dense
35			
40			
45			
50			
55			
60			
65			
70			
75			
80			
85			
90			
95			
100			
105			
110			
115			

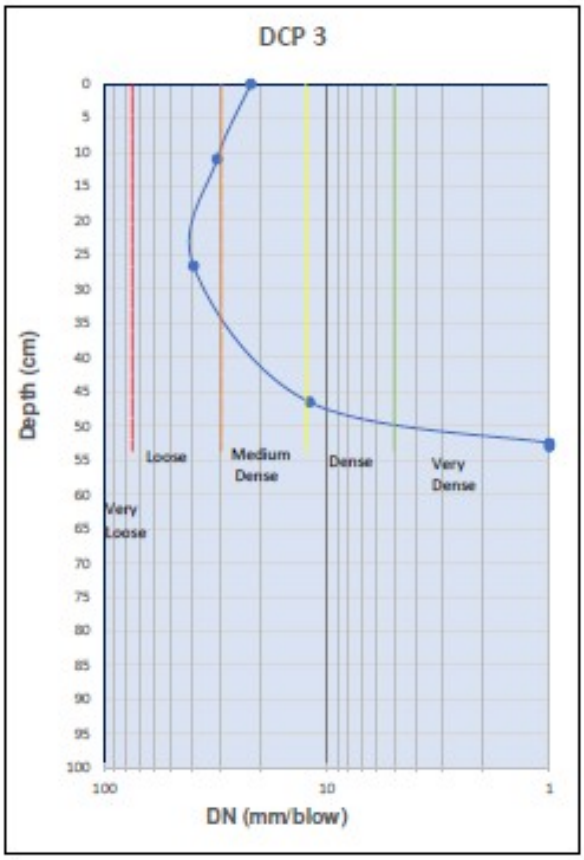

SOIL CONSISTENCIES: SPT N- Value vs DCP

CONSISTENCY	SPT (Blows /300mm)	DCP (mm/blow)
Very loose	<4	>75
Loose	4- 10	30 – 75
Medium dense	10 – 30	12.5 – 30
Dense	30 - 50	5 – 12.5
Very dense	>50	2 - 5

STELLENBOSCH
STELLENBOSCH • PNIEL • FRANSCHHOEK
MUNISIPALITEIT • UMASIPALA • MUNICIPALITY

DCP 4

Number of Blows	Penetration per Blow (mm/blow)	Corrected Depth (cm)	Classification
0			
5	2	0.9	V. Dense
10	19	10.6	Medium Dense
15	17	19	Medium Dense
20	22	30	Medium Dense
25	31	45.5	Loose
30	42	66.7	Loose
35	38	85.5	Loose
40	2	86.5	V. Dense
45	3	88	V. Dense
50	6	91	Dense
55	25	103.5	Medium Dense
60	10	108.5	Dense
65	14	115.3	Medium Dense
70	17	124	Medium Dense
75	25	136.6	Medium Dense
80	26	149.7	Medium Dense
85	27	163.2	Medium Dense
90	28	177	Medium Dense
95	28	191	Medium Dense
100	29	205.5	Medium Dense
105	29	220.1	Medium Dense
110			
115			

SOIL CONSISTENCIES: SPT N- Value vs DCP

CONSISTENCY	SPT (blows /300mm)	DCP (mm/blow)
Very loose	<4	>75
Loose	4 - 10	30 – 75
Medium dense	10 – 30	12.5 – 30
Dense	30 - 50	5 – 12.5
Very dense	>50	2 - 5

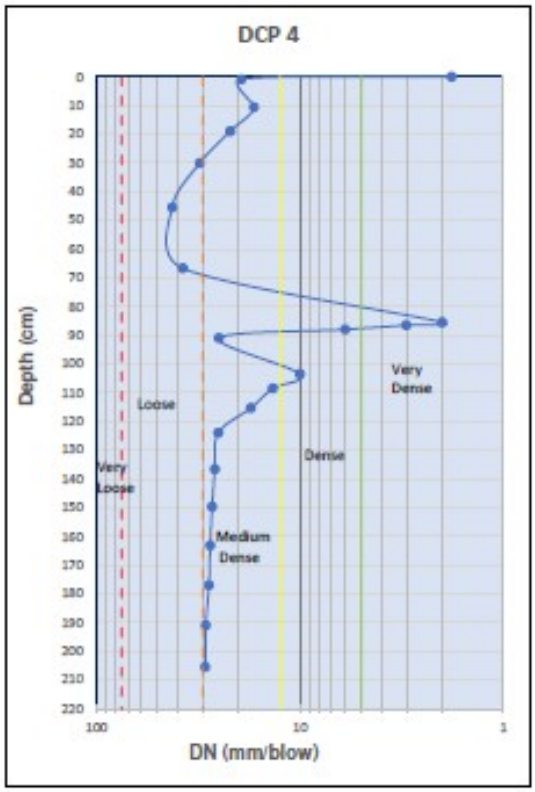

0.01
0.11
0.19
0.30
0.46
0.67
0.86
0.87
0.88
0.91
1.04
1.09
1.15
1.24
1.37
1.50
1.63
1.77
1.91
2.06
2.20

STELLENBOSCH
STELLENBOSCH • PNIEL • FRANSCHHOEK
MUNISIPALITEIT • UMASIPALA • MUNICIPALITY

DCP 5

Number of Blows	Cumulative Penetration (cm)	Penetration per Blow (cm/blow)	Penetration per Blow (mm/blow)	Type of Hammer (kg)	Corrected Depth (cm)	Classification
0	0					
5	16.5	3.30	33	8	16.5	Loose
10	37	4.10	41	8	37	Loose
15	53	3.20	32	8	53	Loose
20	56	0.60	6	8	56	Dense
25	58.2	0.44	4	8	58.2	V. Dense
30	60.9	0.54	5	8	60.9	Dense
35	64.5	0.72	7	8	64.5	Dense
40	70.2	1.14	11	8	70.2	Dense
45	80.0	1.96	20	8	80	Medium Dense
50	82.6	0.52	5	8	82.6	Dense
55	84.6	0.40	4	8	84.6	V. Dense
60	86.0	0.28	3	8	86	V. Dense
65						
70						
75						
80						
85						
90						
95						
100						
105						
110						
115						

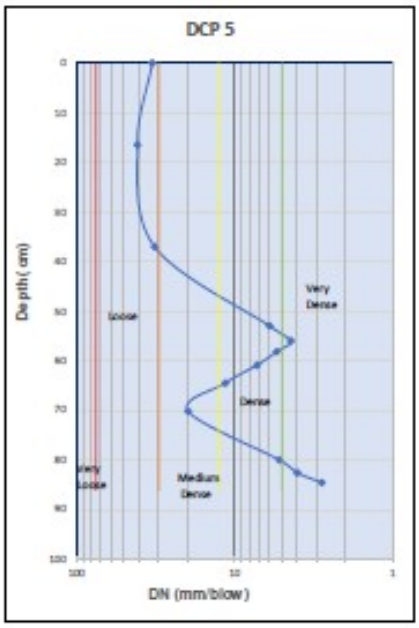

0.00
0.17
0.37
0.53
0.56
0.58
0.61
0.65
0.70
0.80
0.83
0.85
0.86

STELLENBOSCH
STELLENBOSCH • PNIEL • FRANSCHHOEK
MUNISIPALITEIT • UMASIPALA • MUNICIPALITY

DCP 6

Number of Blows	Penetration per Blow (mm/blow)	Corrected Depth (cm)	Classification
0			
5	54	27	Loose
10	24	39.2	Medium Dense
15	13	45.6	Medium Dense
20	6	48.5	Dense
25	3	50.2	V. Dense
30	3	51.9	V. Dense
35	2	53	V. Dense
40	2	54	V. Dense
45	3	55.6	V. Dense
50	2	56.8	V. Dense
55	3	58.4	V. Dense
60	3	60	V. Dense
65	2	61	V. Dense
70	4	63	V. Dense
75	4	65	V. Dense
80	6	68	Dense
85	6	71	Dense
90	7	74.5	Dense
95	14	81.5	Medium Dense
100	3	83	V. Dense
105	18	92	Medium Dense
110			
115			

SOIL CONSISTENCIES: SPT N- Value vs DCP

CONSISTENCY	SPT (Blows /300mm)	DCP (mm/blow)
Very loose	<4	>75
Loose	4 - 10	80 – 75
Medium dense	10 – 30	12.5 – 30
Dense	30 - 50	5 – 12.5
Very dense	>50	2 - 5

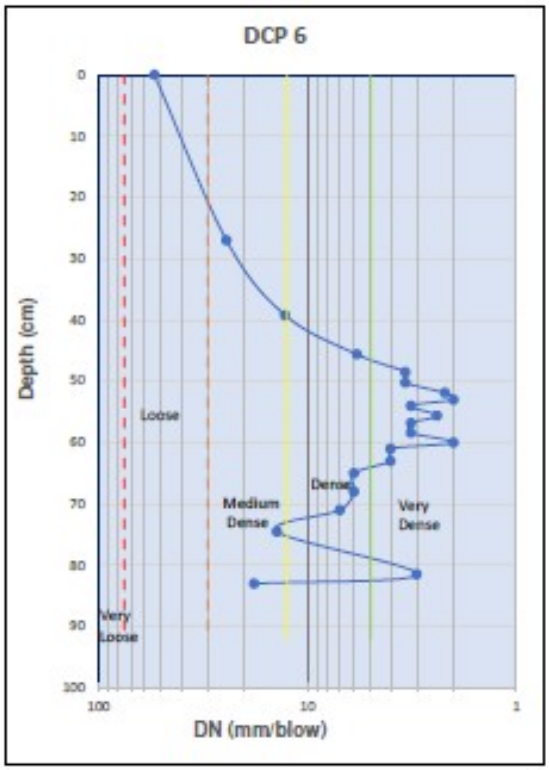

0.27
0.39
0.46
0.49
0.50
0.52
0.53
0.54
0.56
0.57
0.58
0.60
0.61
0.63
0.65
0.68
0.71
0.75
0.82
0.83
0.92

STELLENBOSCH
STELLENBOSCH • PNIEL • FRANSCHHOEK
MUNISIPALITEIT • UMASIPALA • MUNICIPALITY

DCP 8

Number of Blows	Penetration per Blow (mm/blow)	Corrected Depth (cm)	Classification
0			
5	22	10.9	Medium Dense
10	14	18.0	Medium Dense
15	11	23.5	Dense
20	12	29.6	Dense
25	10	34.5	Dense
30	13	40.8	Medium Dense
35	10	46.0	Dense
40	16	54.2	Medium Dense
45	12	60.0	Dense
50	12	66.0	Dense
55	11	71.5	Dense
60	8	75.5	Dense
65	7	79.0	Dense
70	5	81.6	Dense
75	6	84.5	Dense
80	5	87.0	Dense
85	6	90.0	Dense
90	6	93.0	Dense
95	7	96.3	Dense
100	5	99.0	Dense
105	5	101.5	Dense
110	5	104.0	Dense
115	14	111.1	Medium Dense
120	16	119.2	Medium Dense
125	19	128.7	Medium Dense
130	8	132.5	Dense
135	1	133.0	V. Dense
140			
145			

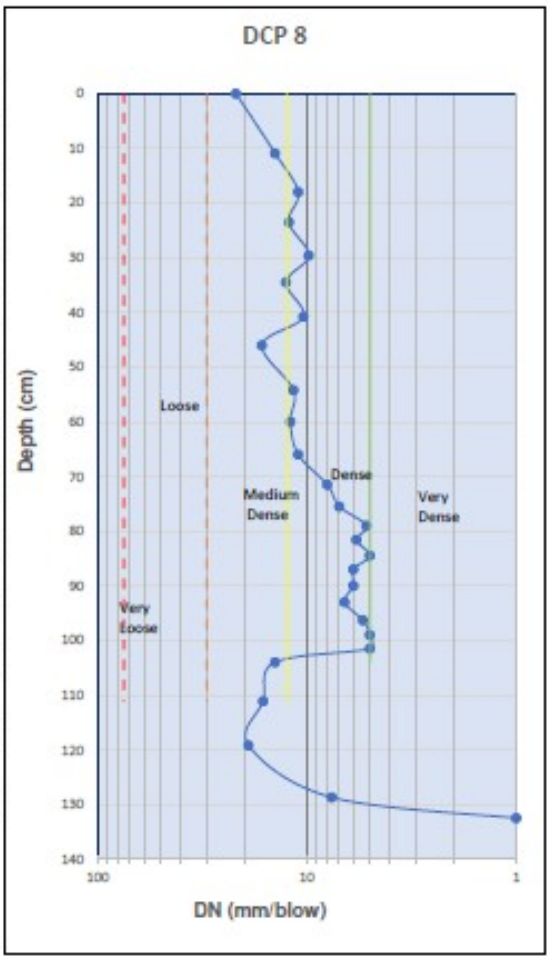

SOIL CONSISTENCIES: SPT N- Value vs DCP

CONSISTENCY	SPT (blows /300mm)	DCP (mm/blow)
Very loose	<4	>75
Loose	4- 10	30 – 75
Medium dense	10 – 30	12.5 – 30
Dense	30 - 50	5 – 12.5
Very dense	>50	2 - 5

STELLENBOSCH
STELLENBOSCH • PNIEL • FRANSCHHOEK
MUNISIPALITEIT • UMASIPALA • MUNICIPALITY

DCP 9

Number of Blows	Penetration per Blow (mm/blow)	Corrected Depth (cm)	Classification
0			
5	33	16.5	Loose
10	41	37.0	Loose
15	32	53.0	Loose
20	6	56.0	Dense
25	4	58.2	V. Dense
30	5	60.9	Dense
35	7	64.5	Dense
40	11	70.2	Dense
45	20	80.0	Medium Dense
50	5	82.6	Dense
55	3	84.0	V. Dense
60	1	84.6	V. Dense
65	3	86.0	V. Dense
70			
75			
80			
85			
90			
95			
100			
105			
110			
115			

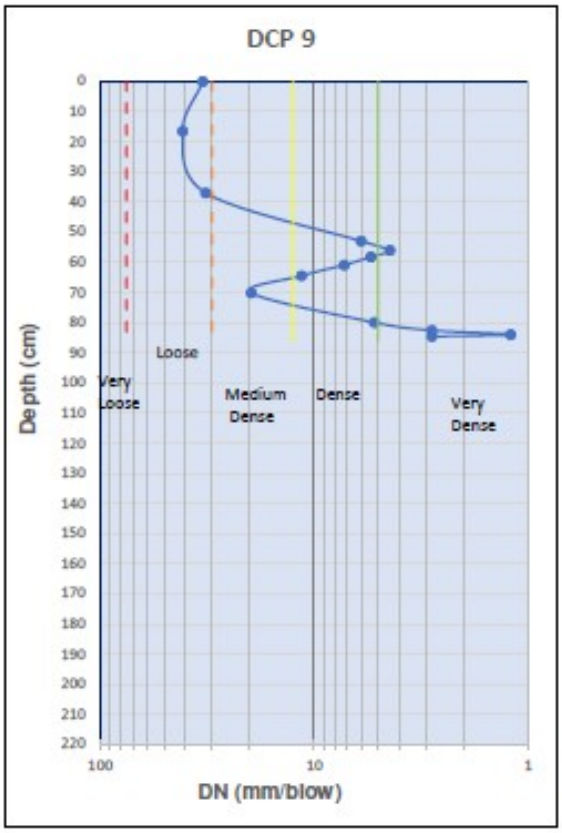

SOIL CONSISTENCIES: SPT N- Value vs DCP

CONSISTENCY	SPT (blows /300mm)	DCP (mm/blow)
Very loose	<4	>75
Loose	4- 10	30 – 75
Medium dense	10 – 30	12.5 – 30
Dense	30 - 50	5 – 12.5
Very dense	>50	2 - 5

STELLENBOSCH
STELLENBOSCH • PNIEL • FRANSCHHOEK
MUNISIPALITEIT • UMASIPALA • MUNICIPALITY

DCP 10

Number of Blows	Penetration per Blow (mm/blow)	Corrected Depth (cm)	Classification
0			
5	23	11.7	Medium Dense
10	32	27.5	Loose
15	18	36.5	Medium Dense
20	9	40.9	Dense
25	8	44.7	Dense
30	9	49.0	Dense
35	9	53.5	Dense
40	13	60.0	Medium Dense
45	13	66.6	Medium Dense
50	17	74.9	Medium Dense
55	11	80.2	Dense
60	17	88.5	Medium Dense
65	15	96.0	Medium Dense
70	6	99.0	Dense
75	0	99.2	V. Dense
80	2	100.2	V. Dense
85	1	100.7	V. Dense
90	6	103.6	Dense
95	9	108.1	Dense
100	5	110.6	Dense
105	4	112.7	V. Dense
110	2	113.6	V. Dense
115			
120			
125			
130			
135			
140			
145			

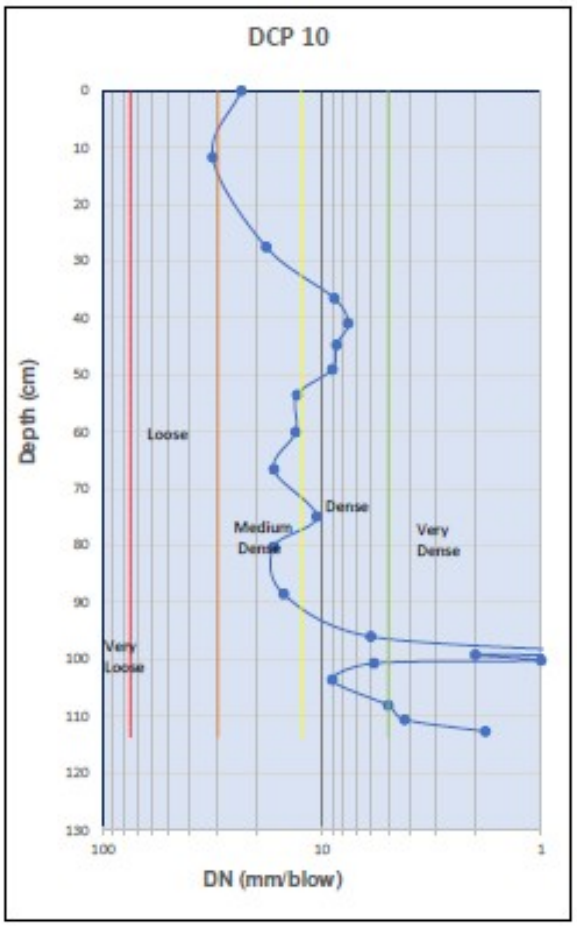

SOIL CONSISTENCIES: SPT N- Value vs DCP

CONSISTENCY	SPT (blows /300mm)	DCP (mm/blow)
Very loose	<4	>75
Loose	4- 10	30 – 75
Medium dense	10 – 30	12.5 – 30
Dense	30 - 50	5 – 12.5
Very dense	>50	2 - 5

APPENDIX C: LABORATORY TEST RESULTS

STELLENBOSCH
STELLENBOSCH • PNIEL • FRANSCHHOEK
MUNISIPALITEIT • UMASIPALA • MUNICIPALITY

TYPICAL SOIL STRENGTH CHARACTERISICS

COHESIONLESS SOILS

Description	Dry Density (kg/m³)		N - Value		Relative Density	Soil Modulus E (MPa) Sand Gravel	Sand	Sandy Silt
Very Loose	0	1,450	0	5	<0.2	25	12	6
Loose	1,450	1,600	5	10	0.2 - 0.4	50	25	12
Medium Dense	1,600	1,750	10	30	0.4 - 0.6	100	50	25
Dense	1,750	1,900	30	50	0.6 - 0.8	200	100	50
Very Dense	1,900	2,400	50	100	>0.8	400	200	100

COHESIVE SOILS

Description	Undrained Shear Strength (kN/m³)		N - Value		Soil Modulus E (MPa) Sandy Silt	Silt	Silty Clay
Very Soft	0	20	0	2	6	3	2
Soft	20	40	2	4	12	6	3
Firm	40	80	4	8	25	12	6
Stiff	80	150	8	15	50	25	12
Very Stiff	150	350	15	30	100	50	25
	UCS = 2 C_u		C_u = Undrained shear strength				

COMPRESSIBILITY & COLLAPSE

Carter, M and Bentley, S. P., Correlations of Soil Properties, 1991.

	Coeff vol. Compr. m_v (m²/kN)		Trouble Index	Collapse Potential		
V.High Compressibility		1.50E-03	Very Severe	> 20.1%		V.Highly Collapsible
High Compressibility	1.50E-03	3.00E-04	Severe	10.1%	20.0%	Highly Collapsible
Mod. Compressibility	3.00E-04	1.00E-04	Trouble	5.1%	10.0%	Mod. Collapsible
Low Compressibility	1.00E-04	3.00E-05	Mod. Trouble	1.1%	5.0%	Slightly Collapsible
V.Low Compressibilty	3.00E-05	1.00E-05	No problem	< 1%		V.Slightly Collapsible

TYPICAL ROCK/SOIL PROPERTIES & ESTIMATED BEARING CAPACITES

Rock / Soil Density Description	UCS (MPa)	Bearing Capacity	Mod. Ratio	E_d (MPa)	Friction Angle ϕ'	Cohesion Cu / C'	N-Value	Dry Unit Wt kg/m³
Extremely hard rock	200	Function of UCS & jointing intensity (j)	600	120,000	Rock joint / structure friction	Rock joint / structure cohesion	Refer to Schmidt hardness or point load index	> 40
Very hard rock	150		450	67,500				35 - 40
Hard rock	100		375	37,500				30 - 35
Medium hard rock	50		325	16,250				27 - 30
Soft rock	10		300	3,000	Rock mass friction	Rock mass cohesion		25 - 27
Very soft rock	1		275	275				23 - 25
Very hard soil/decomp.	0.5		250	125			> 80	21.5 - 23
Very dense sand/gravel		400	250	100	44	-	50 - 80	19.5-21.5
Very dense silt/sand		300	225	68	40	-		
Very stiff clay/silt		200	200	40	22	80 / 15	15-30	17.5
Dense sand/gravel		300	225	68	40	-	30-50	17.5-19.5
Dense silt/sand		200	200	40	36	-		
Stiff clay/silt		150	175	26	20	40 / 10	8 - 15	15.5-17.5
Medium dense sand/gravel		200	200	40	36	-	10 - 30	15.5-17.5
Medium dense silt/sand		150	175	26	32	-		
Firm clay/silt		75	150	11	18	20 / 5	4 - 8	14.0-15.5
Loose sand/gravel		150	175	26	32	-	5 - 10	14.0-15.5
Loose silt/sand		75	150	11	28	-		
Soft clay/silt		35	125	4	17	10 / 2	2 - 4	12.5-14.0
Very loose sand/gravel		75	150	11	28	-	<5	<14.0
Very loose silt/sand		35	125	4	24	-		
Very soft clay/silt		20	100	2	16	<5 / 0	<2	<12.5

STELLENBOSCH
STELLENBOSCH • PNIEL • FRANSCHHOEK
MUNISIPALITEIT • UMASIPALA • MUNICIPALITY

Page: 2

LABORATORY TEST RESULTS SUMMARY

CLIENT	BVI Consulting Engineers	FILE No.	
PROJECT	Stellenbosch Road Realignment	TEST BY	Control Geosciences
SITE	Cnr R44/R310/Alexander Rd	DATE	29/07/2020

TEST PIT	TP2	TP3	TP3	TP4	TP9			
SAMPLE #	32896	32897	32894A	32898	32895			
DEPTH (m)	0.35-0.80	0.1-0.4	0.4-0.9	0.1-0.5	0.8-1.5			
DESCRIPTION of MATERIAL	Silty clayey SAND	Silty clayey SAND	Silty gravelly SAND	Silty clayey SAND	Silty gravelly SAND			
Field Consistency	MD	MD	D-VD	MD	MD			
Field Moisture	SM-M	SM-M	D-SM	SM	SM			
Unified Soil Class	SM-SC	SM-SC	SM-SC	SM-SC	SM-SC			
TRH 4 Class			G6		G6			
AASHTO CLASS.	A-2-4	A-2-4	A-2-4	A-2-4	A-2-4			
SIEVE SIZE (mm)	GRADING ANALYSIS (% PASSING)							
53.000			100		100			
19.000			97		97			
13.200			96		96			
4.750	100	100	92	100	93			
2.000	99	98	89	99	87			
0.425	92	85	75	92	59			
0.300	84	74	68	80	52			
0.150	56	50	48	46	36			
0.075	34	35	30	26	21			
0.050	30	26	22	21	18			
0.002	10	10	7	6	5			
GRAVEL >2.000	1	2	11	1	13			
SAND >.06 < 2.000	68	69	64	76	68			
SILT > 0.002 < .06	21	19	18	17	14			
CLAY < 0.002	10	10	7	6	5			
GRADING MODULUS	2.25	2.18	1.94	2.17	1.67			
	LABORATORY DETERMINED SOIL CONSTANTS							
LIQUID LIMIT	0	15	16	10	15			
PLASTIC LIMIT	0	9	10	10	9			
PLASTICITY INDEX	0	6	6	0	6			
LIQUIDITY INDEX								
PI (whole sample)	0	4	4	0	3			
LINEAR SHRINKAGE	0.0	2.0	2.0	0.0	2.0			
EXPANSIVENESS	Non	Non	Non	Non	Non			
Savage's K-Value	Non	Non	Non	Non	Non			
Laboratory S.G.								
Actual m/c (%)								
Max Mod Aashto			2086		2134			
OMC (%)			8.0		7.6			
C.B.R. @ 90% MOD			12		13			
C.B.R. @ 95% MOD			29		30			
C.B.R. @ 100% MOD			70		80			
% Swell - 90% MOD			1.5		0.9			
% Swell - 95% MOD								
% Swell -100% MOD								

STELLENBOSCH
STELLENBOSCH • PNIEL • FRANSCHHOEK
MUNISIPALITEIT • UMASIPALA • MUNICIPALITY

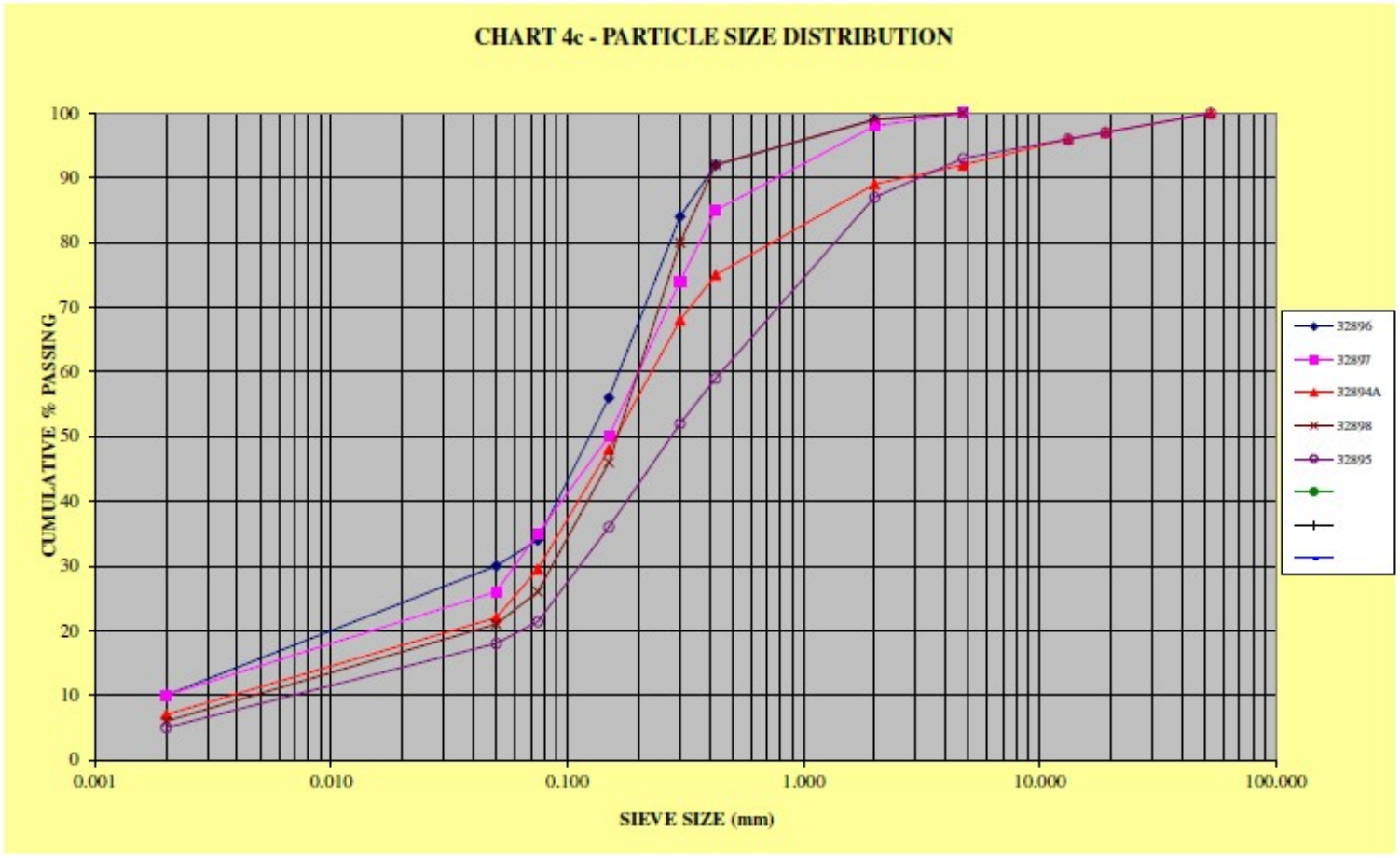

STELLENBOSCH
STELLENBOSCH • PNIEL • FRANSCHHOEK
MUNISIPALITEIT • UMASIPALA • MUNICIPALITY

CONTROL GEOSCIENCES (PTY) LTD

CIVIL ENGINEERING MATERIAL AND GEOTECHNICAL LABORATORY,
GEOTECHNICAL AND ENVIRONMENTAL SERVICES
A division of ControLab South Africa (Pty) Ltd – Accreditation Number: T0306

1986/091003/07

LABORATORY: 7 Milan Street, Airport Industria, Cape Town, Tel: (021) 934 1114, email: geosol@mweb.co.za
CONTROLAB HEAD OFFICE: 1 Alfred Road, Vincent, East London, Tel: (043) 7267959, Fax: (043) 7267425, email: info@controlab.co.za
OTHER CONTROLAB BRANCH OFFICES: East London, Johannesburg, Mthatha, Kokstad, Queenstown, Lusaka - Zambia

CLIENT: MTS Biggs Farming t/a Geoservices

PROJECT: Stellenbosch Road Alignment

DATE: 29-07-2020

ATT: Tim Biggs

REF: L200736A

ROAD INDICATOR TEST SUMMARY

Client Ref. No.:		*Sample Number:*	32894A
Client Sample Ref.:		*Sample Position:*	TP 3
Client Sample Ref.:		*Depth:*	0.4-0.9m
Client Sample Ref.:		*Sample Description:*	yel br silt sand & cobbles

TMH 1 Method A1		
Sieve Analysis		
Sieve Size (mm)	% Passing	
75		
63	100	
53	99	
37,5	98	
26,5	97	
19	97	
13,2	96	
4,75	92	
2,00	89	
0,425	75	
0,075	29,5	

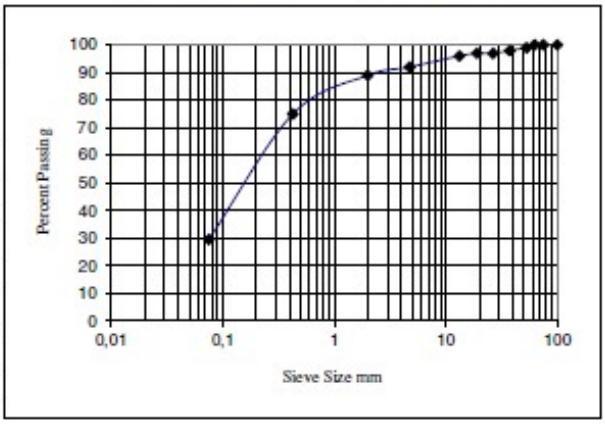

TMH 1 Methods A2, A3 & A4	
Atterberg limits	
Liquid Limit	16
Plastic Index	6
Linear Shrinkage	2,0

Grading Modulus (GM)	1,07
Oversized Index (Io)	
Shrinkage Product (Sp)	
Plastic Product (Pp)	
Grading Coefficient (Gc)	
Maximum size (mm)	

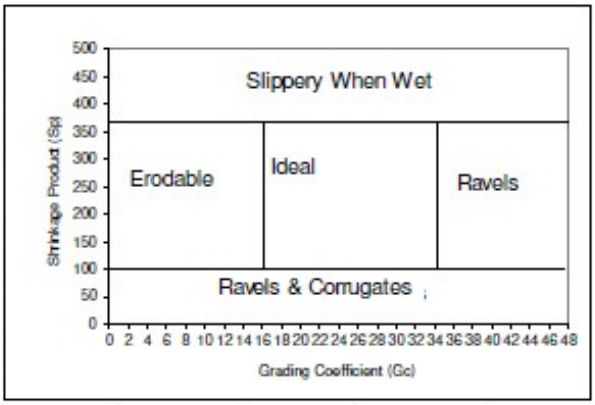

Maximum Dry Den.	OMC	Percentage Compaction.	100%	98%	95%	93%	90%
2086	8	CBR Values	70	50	29	20	12
						Max. %Swell	1,5

Technical Signatory: M Hofman

The above test results are pertinent to the samples received and tested only.
While the tests are carried out according to recognized standards Controll Geosciences shall not be liable for erroneous testing or reporting thereof. This report may not be reproduced except in full without prior consent of Control Geosciences.

STELLENBOSCH
STELLENBOSCH • PNIEL • FRANSCHHOEK
MUNISIPALITEIT • UMASIPALA • MUNICIPALITY

CONTROL GEOSCIENCES (PTY) LTD

CIVIL ENGINEERING MATERIAL AND GEOTECHNICAL LABORATORY,
GEOTECHNICAL AND ENVIRONMENTAL SERVICES
A division of ControLab South Africa (Pty) Ltd – Accreditation Number: T0308

1986/091003/07

LABORATORY: 7 Milan Street, Airport Industria, Cape Town, Tel.: (021) 934 1114, e-mail: pecasi@mweb.co.za
CONTROLAB HEAD OFFICE: 1 Alfred Road, Vincent, East London, Tel.: (043) 726 7659, Fax: (043) 726 7426, e-mail: info@controlab.co.za
OTHER CONTROLAB BRANCH OFFICES: East London, Johannesburg, Mthatha, Kokstad, Queenstown, Lusaka - Zambia

CLIENT: MTS Biggs t/a Geoservices

PROJECT: Stellenbosch Road Alignment

DATE: 29-07-2020

ATT: Tim Biggs

REF: L200736A

ROAD INDICATOR TEST SUMMARY

Client Ref. No.:		*Sample Number:*	32895
Client Sample Ref.:		*Sample Position:*	TP 9
Client Sample Ref.:		*Depth:*	0.8-1.5m
Client Sample Ref.:		*Sample Description:*	yel br silty gvl sand

TMH 1 Method A1	
Sieve Analysis	
Sieve Size (mm)	% Passing
75	
63	
53	100
37,5	99
26,5	98
19	97
13,2	97
4,75	93
2,00	87
0,425	59
0,075	21,4

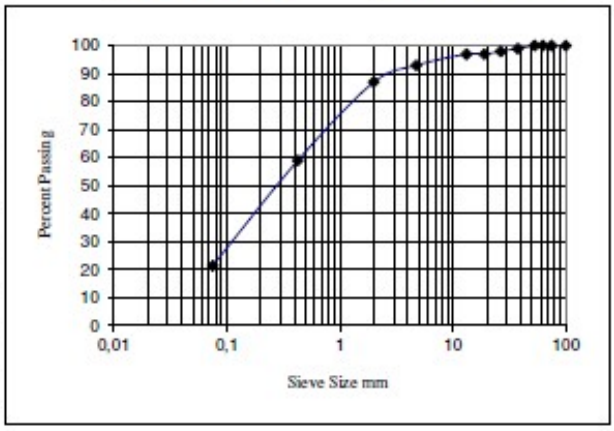

TMH 1 Methods A2, A3 & A4	
Atterberg limits	
Liquid Limit	15
Plastic Index	6
Linear Shrinkage	2,0

Grading Modulus (GM)	1,33
Oversized Index (Io)	
Shrinkage Product (Sp)	
Plastic Product (Pp)	
Grading Coefficient (Gc)	
Maximum size (mm)	

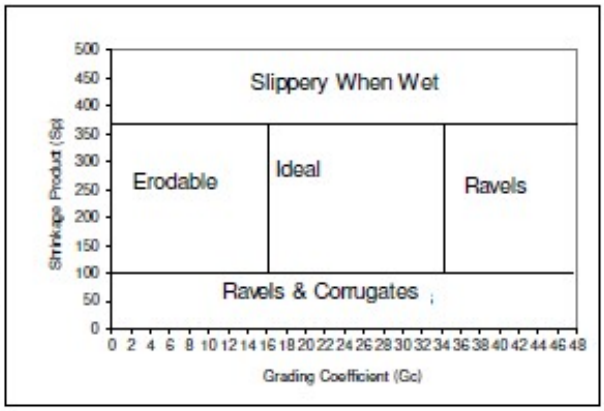

Maximum Dry Den.	OMC	Percentage Compaction.	100%	98%	95%	93%	90%
2134	7,6	CBR Values	80	54	30	20	13
						Max. %Swell	0,9

Technical Signatory: M Hofman

The above test results are pertinent to the samples received and tested only.
While the tests are carried out according to recognized standards Controll Geosciences shall not be liable for erroneous testing or reporting thereof. This report may not be reproduced except in full without prior consent of Control Geosciences.

STELLENBOSCH
STELLENBOSCH • PNIEL • FRANSCHHOEK
MUNISIPALITEIT • UMASIPALA • MUNICIPALITY

CONTROL GEOSCIENCES (PTY) LTD

CIVIL ENGINEERING MATERIAL AND GEOTECHNICAL LABORATORY,
GEOTECHNICAL AND ENVIRONMENTAL SERVICES
A division of ControLab South Africa (Pty) Ltd – Accreditation Number: T0308

1986/09 1003/07

LABORATORY: 7 Milan Street, Airport Industria, Cape Town, Tel: (021) 934 1114, e-mail: geosol@mweb.co.za
CONTROLAB HEAD OFFICE: 1 Alfred Road, Vincent, East London, Tel: (043) 7267859, Fax: (043) 7267426, e-mail: info@controlab.co.za
OTHER CONTROLAB BRANCH OFFICES: East London, Johannesburg, Mthatha, Kokstad, Queenstown, Lusaka - Zambia

CLIENT: MTS Biggs Farming t/a Geoservices
PROJECT: Stellenbosch Road Alignment

ATT: Tim Biggs
DATE: 29-07-2020
REF: L200736A

ASTM D422 SIEVE ANALYSIS

DESCRIPTION : dark brown clayey sand
POSITION : TP 2 @ 0.35-0.8m
SAMPLE NO. : 32896
CLIENT SAMPLE NO. :

Sieve Analysis		Percent Passing
SIEVE SIZE (mm)	75,00	
	63,00	
	53,00	
	37,50	
	26,50	
	19,00	
	13,20	
	9,50	
	6,70	
	4,75	100
	2,36	99
	2,00	99
	1,18	98
	0,600	96
	0,425	92
	0,300	84
	0,150	56
	0,0750	34

Hydrometer Analysis	
Diameter of particle (mm)	Percentage of soil suspension (%)
0,0723	34
0,0368	26
0,0187	19
0,0098	13
0,0034	10
0,0025	10
0,0015	10

SCS Dispersion Test	
Diameter of particle (mm)	Percentage of soil suspension (%)

% SCS Dispersion:	
Initial Moisture Content (%) :	
pH:	
Conductivity mS/m:	

Atterberg Limits :	
Liquid Limit	
Plastic Index	S-P
Linear Shrinkage	

MOD AASHTO ; C.B.R. :	
MOD AASHTO (Kg/m³)	
O.M.C. (%)	
C.B.R. @ 100% Comp.	
C.B.R. @ 98 % Comp.	
C.B.R. @ 95 % Comp.	
C.B.R. @ 93 % Comp.	
C.B.R. @ 90 % Comp.	
Swell (max) %	

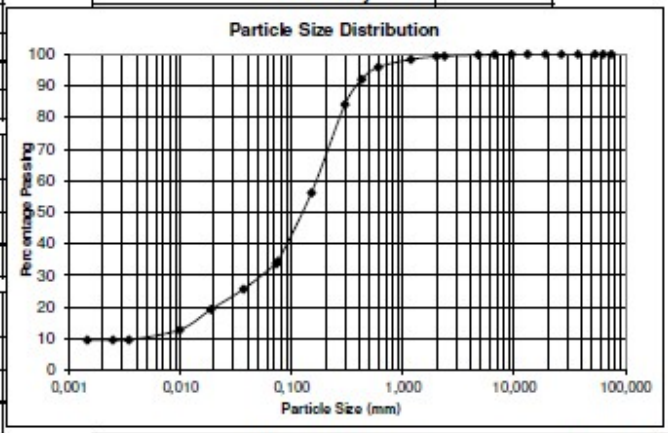

Tabulated Summary	Percentage
Gravel : Percentage - 4.75 mm	0
Sand : Percentage - 4.75mm and + 0.075mm	66
Silt : Percentage - 0.075mm and + 0.002mm	24
Clay : Percentage - 0.002mm	10

The above test results are pertinent to the samples received and tested only. Technical Signatory: M Hofman
While the tests are carried out according to recognized standards Control Geosciences shall not be liable for erroneous testing or reporting thereof.
This report may not be reproduced except in full without prior consent of Control Geosciences.

Remarks:

STELLENBOSCH
STELLENBOSCH • PNIEL • FRANSCHHOEK
MUNISIPALITEIT • UMASIPALA • MUNICIPALITY

CONTROL GEOSCIENCES (PTY) LTD

CIVIL ENGINEERING MATERIAL AND GEOTECHNICAL LABORATORY,
GEOTECHNICAL AND ENVIRONMENTAL SERVICES
A division of ControLab South Africa (Pty) Ltd – Accreditation Number: T0308

1998/09 1003/07

LABORATORY: 7 Milan Street, Airport Industria, Cape Town, Tel: (021) 934 1114, e-mail: geosol@mweb.co.za
CONTROLAB HEAD OFFICE: 1 Alfred Road, Vincent, East London, Tel: (043) 726 7959, Fax: (043) 726 7426, e-mail: info@controlab.co.za
OTHER CONTROLAB BRANCH OFFICES: East London, Johannesburg, Mthatha, Kokstad, Queenstown, Lusaka - Zambia

CLIENT: MTS Biggs Farming t/a Geoservices
PROJECT: Stellenbosch Road Alignment

ATT: Tim Biggs
DATE: 29-07-2020
REF: L200736A

ASTM D422 SIEVE ANALYSIS

DESCRIPTION : dark brown clayey sand
POSITION : TP 3 @ 0.1-0.4m
SAMPLE NO. : 32897
CLIENT SAMPLE NO. :

Sieve Analysis		Percent Passing
SEVE SIZE (mm)	75,00	
	63,00	
	53,00	
	37,50	
	26,50	
	19,00	
	13,20	
	9,50	
	6,70	
	4,75	100
	2,36	99
	2,00	98
	1,18	97
	0,600	92
	0,425	85
	0,300	74
	0,150	50
	0,0750	35

Hydrometer Analysis	
Diameter of particle (mm)	Percentage of soil suspension (%)
0,0715	35
0,0368	25
0,0185	22
0,0097	19
0,0034	13
0,0025	10
0,0015	10

SCS Dispersion Test	
Diameter of particle (mm)	Percentage of soil suspension (%)

% SCS Dispersion:	
Initial Moisture Content (%) :	
pH:	
Conductivity mS/m:	

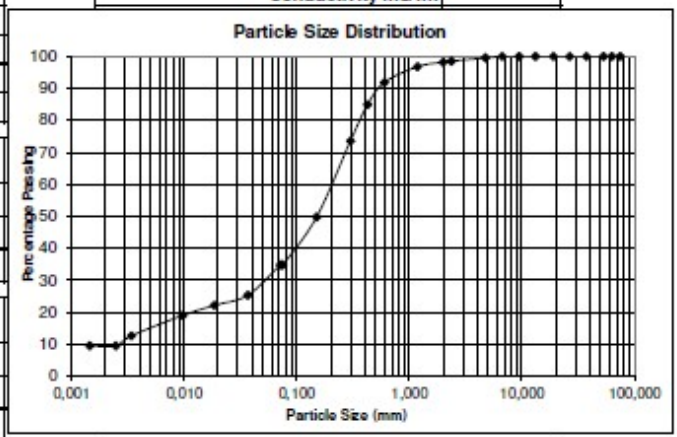

Atterberg Limits :	
Liquid Limit	15
Plastic Index	6
Linear Shrinkage	2,0

MOD AASHTO ; C.B.R. :	
MOD AASHTO (Kg/m³)	
O.M.C. (%)	
C.B.R. @ 100% Comp.	
C.B.R. @ 98 % Comp.	
C.B.R. @ 95 % Comp.	
C.B.R. @ 93 % Comp.	
C.B.R. @ 90 % Comp.	
Swell (max) %	

Tabulated Summary	Percentage
Gravel : Percentage - 4.75 mm	0
Sand : Percentage - 4.75mm and + 0.075mm	65
Silt : Percentage - 0.075mm and + 0.002mm	23
Clay : Percentage - 0.002mm	12

The above test results are pertinent to the samples received and tested only. Technical Signatory: M Hofman
While the tests are carried out according to recognized standards Control Geosciences shall not be liable for erroneous testing or reporting thereof.
This report may not be reproduced except in full without prior consent of Control Geosciences.

Remarks:

STELLENBOSCH
STELLENBOSCH • PNIEL • FRANSCHHOEK
MUNISIPALITEIT • UMASIPALA • MUNICIPALITY

CONTROL GEOSCIENCES (PTY) LTD

CIVIL ENGINEERING MATERIAL AND GEOTECHNICAL LABORATORY,
GEOTECHNICAL AND ENVIRONMENTAL SERVICES
A division of ControLab South Africa (Pty) Ltd – Accreditation Number: T0308

1986/09 1003/07

LABORATORY: 7 Milan Street, Airport Industria, Cape Town, Tel: (021) 934 1114, e mail: geosol@mweb.co.za
CONTROLAB HEAD OFFICE: 1 Alfred Road, Vincent, East London, Tel: (043) 7267859, Fax: (043) 7267426, e mail: info@controlab.co.za
OTHER CONTROLAB BRANCH OFFICES: East London, Johannesburg, Mthatha, Kokstad, Queenstown, Lusaka - Zambia

CLIENT: MTS Biggs Farming t/a Geoservices
PROJECT: Stellenbosch Road Alignment

ATT: Tim Biggs
DATE: 29-07-2020
REF: L200736A

ASTM D422 SIEVE ANALYSIS

DESCRIPTION : dark brown silty sand
POSITION : TP 4 @ 0.1-0.5m
SAMPLE NO. : 32898
CLIENT SAMPLE NO. :

Sieve Analysis		Percent Passing
SEVE SIZE (mm)	75,00	
	63,00	
	53,00	
	37,50	
	26,50	
	19,00	
	13,20	
	9,50	
	6,70	
	4,75	
	2,36	100
	2,00	99
	1,18	98
	0,600	96
	0,425	92
	0,300	80
	0,150	46
	0,0750	26

Hydrometer Analysis	
Diameter of particle (mm)	Percentage of soil suspension (%)
0,0736	26
0,0375	19
0,0190	13
0,0099	10
0,0035	6
0,0025	6
0,0015	6

SCS Dispersion Test	
Diameter of particle (mm)	Percentage of soil suspension (%)

% SCS Dispersion:	
Initial Moisture Content (%) :	
pH:	
Conductivity mS/m:	

Atterberg Limits :	
Liquid Limit	
Plastic Index	S-P
Linear Shrinkage	

MOD AASHTO ; C.B.R. :	
MOD AASHTO (Kg/m³)	
O.M.C. (%)	
C.B.R. @ 100% Comp.	
C.B.R. @ 98 % Comp.	
C.B.R. @ 95 % Comp.	
C.B.R. @ 93 % Comp.	
C.B.R. @ 90 % Comp.	
Swell (max) %	

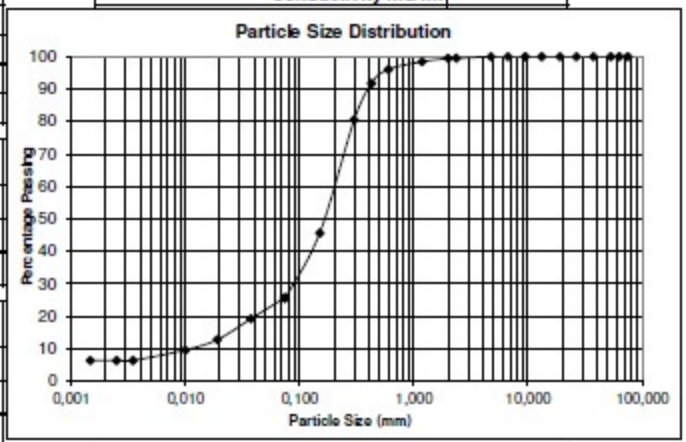

Tabulated Summary	Percentage
Gravel : Percentage - 4.75 mm	0
Sand : Percentage - 4.75mm and + 0.075mm	74
Silt : Percentage - 0.075mm and + 0.002mm	20
Clay : Percentage - 0.002mm	6

The above test results are pertinent to the samples received and tested only. Technical Signatory: M Hofman
While the tests are carried out according to recognized standards Control Geosciences shall not be liable for erroneous testing or reporting thereof.
This report may not be reproduced except in full without prior consent of Control Geosciences.

Remarks:

STELLENBOSCH
STELLENBOSCH • PNIEL • FRANSCHHOEK
MUNISIPALITEIT • UMASIPALA • MUNICIPALITY

Part C4: Site information

Pages

C4 Site information 496

STELLENBOSCH
STELLENBOSCH • PNIEL • FRANSCHHOEK
MUNISIPALITEIT • UMASIPALA • MUNICIPALITY

STELLENBOSCH MUNICIPALITY

BID NO. B/SM 21/27

MAIN ROAD INTERSECTION IMPROVEMENTS: STRAND / ADAM TAS / ALEXANDER

C4 Site Information

CONTENTS

C.4.1 BACKGROUND
C.4.2 SITE DESCRIPTION
C.4.3 TARGET AREA FOR TARGETED LABOUR AND ENTERPRISE
C.4.4 SITE CAMP AND STOCKPILE LOCATION

C.4.1 BACKGROUND

The proposed realignment route of the R44/R310 and Alexander Street Junction, Stellenbosch route is orientated south west- north east and is bounded by the PRASA rail-line running parallel to the western side of the road and residential and commercial properties along the eastern side. Topographically, the road junction is flat and is approximately 134 meters above sea level.

Test pit profiling at depths ranging from 0.3 m to 1.5 m below existing ground level, with an average depth of 0.8 m was done. Filed observations and data from test pits indicated shallow soil conditions and numerous high and medium voltage buried cables along the western side of the road.

The general geology in the Stellenbosch road junction site comprises an underlying layer of fluvial sediment deposited by the Klippies and Jonkershoek Rivers (Eerste River tributaries). These fluvial sediments generally comprise coarse sand and rounded quartzitic boulders and cobbles. The fluvial sediment in-turn overlies Tygerberg Formation (Malmesbury Group) shale (Nt on geological map) and Kuils River Batholith (Cape Granite Suite). Past excavations in the area have exposed paleo channels with incised depths of up to10 m in places (refer to Figure 4, Geological Map).

The site geology comprises a covering layer of colluvial and alluvial sediments with thicknesses ranging between 0.3 m to >1.5 m. Fill material was encountered along the Zone 2, western section of road and within the road islands (TP6 to TP10). The upper 0.25 m generally comprises loose to medium dense, slightly organic, silty sand. This grades into a dense to very dense, slightly clayey, gravelly, silty sand layer with thickness ranging from 0.3 m to 1.5 m. A prominent feature of the site is the 0.3 to 0.5 m thick layer comprising rounded sandstone boulders, cobbles and gravels set in a medium dense to Stormwater drain with dense silty sand matrix. This boulder bed is in turn underlain by medium dense to very dense, slightly clayey, silty sand.

The groundwater level ranges in depth from 0.5 m to > 1.5 m below ground level (mbgl) and is expected to experience seasonal variation. No groundwater seepage was encountered in the test pits excavated on the western section of the proposed road alignment, apart from slow water seepage on the eastern side of the road alignment.

Zone 1: Contains a high-water table in certain sections that will impact the compactability and strength of in-situ and fill materials and will require good pavement layer drainage especially in wet months. If the engineering design requires, in-situ material is cut to spoil and removed to the depth of the dense to very dense boulder/gravelly layer (approximately 0.6 mbgl), the removed material should be stockpiled and used as either selected layer or subgrade material. However, if additional good quality construction base course and upper sub-base materials are required for pavement construction, these will require importing from commercial sources or from an approved and tested borrow pit

Zone 2: Subgrade materials for the west section of road and the island sections comprise suitable selected layer and/or subgrade construction material. The groundwater levels are on average at least 1.5 mbgl.

During the site investigations an inspection of the current road condition was carried out and no visible signs of settlement or cracks were evident. Discussions regarding the original road design and construction were held with the site engineer who confirmed that no problems had arisen due to excessive settlement or bearing capacity. The subgrade soils will tend to undergo immediate or rapid settlement due to the predominantly granular nature of the soils.

C.4.2 SITE DESCRIPTION

The route is underlain by both colluvial, alluvial and fill materials. These are in-turn underlain by residual soils and weathered shales of the Tygerberg Formation. The soils encountered across the site comprise largely of silty clayey sands and silty gravelly sands, all of which are suitable for use as either subgrade, selected layer or subbase materials. A dominant boulder bed was encountered in the eastern section of the site at approximate depths of 0.6m below ground level. The soils were generally non-expansive with low swell percentages and low plasticity.

Moderate groundwater seepage was encountered in Zone 1 test pits (TP1 to TP5) at an average depth of 0.7 mgbl, and slow seepage was encountered in TP6 (Zone 2) at a depth of 0.45 m below existing ground level.

Of significance are the high groundwater levels in Zone 1 which will require adequate provision for subsoil drainage and surface run off to prevent ingress of water into the layerworks.

It is considered that soft excavations class conditions in terms of SANS 1200 can be anticipated in Zone 1 to depths of 0.5 mbgl and intermediate excavations boulder excavation class conditions can be expected from 0.6 m to in excess of 1,5 mbgl. In Zone2, soft excavations class conditions and be expected to depths of 1 m and intermediate excavations class conditions from 1 m to 1.5 mbgl.

STELLENBOSCH
STELLENBOSCH • PNIEL • FRANSCHHOEK
MUNISIPALITEIT • UMASIPALA • MUNICIPALITY

C.4.3 TARGET AREA FOR TARGETED LABOUR AND ENTERPRISE

The target area, as defined in C3.5.2.2, related to the sourcing of local labour includes the towns and communities within the following designated areas:

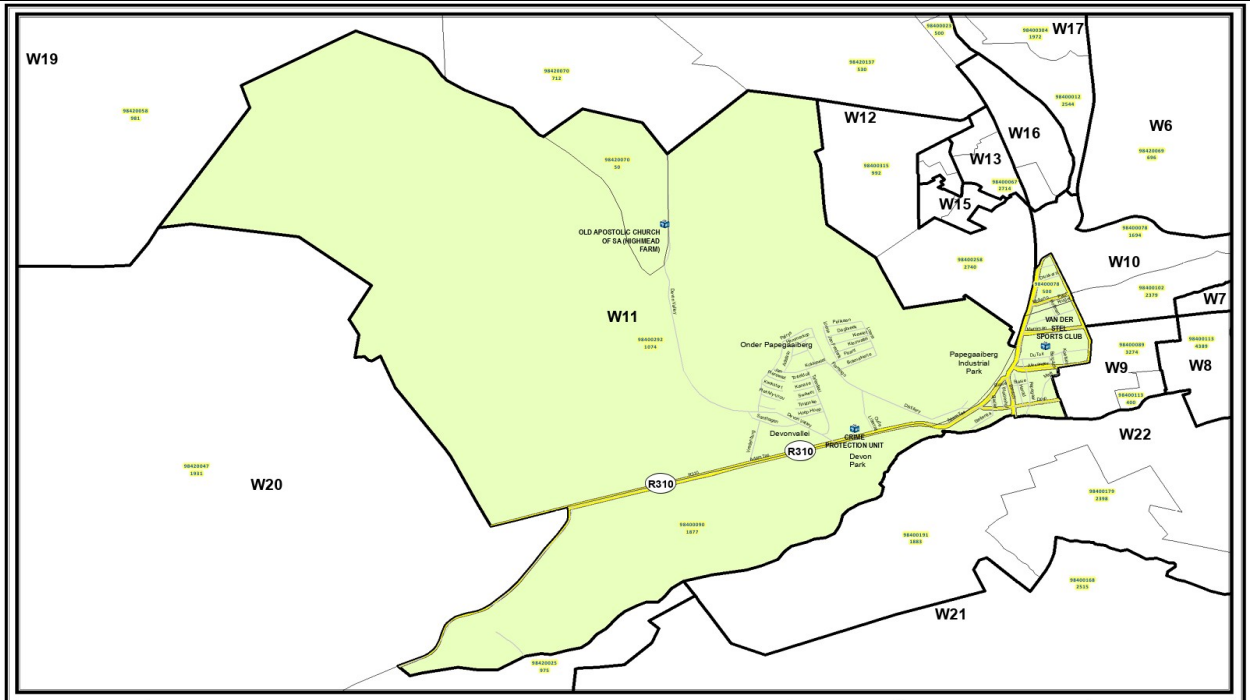

STELLENBOSCH MUNICIPALITY
BID NO. B/SM 21/27

MAIN ROAD INTERSECTION IMPROVEMENTS: STRAND / ADAM TAS / ALEXANDER

TARGETED LABOUR AND ENTERPRISE AREA

STELLENBOSCH
STELLENBOSCH • PNIEL • FRANSCHHOEK
MUNISIPALITEIT • UMASIPALA • MUNICIPALITY

C.4.4 SITE CAMP LOCATION

The proposed location for the site camp as per figure below:

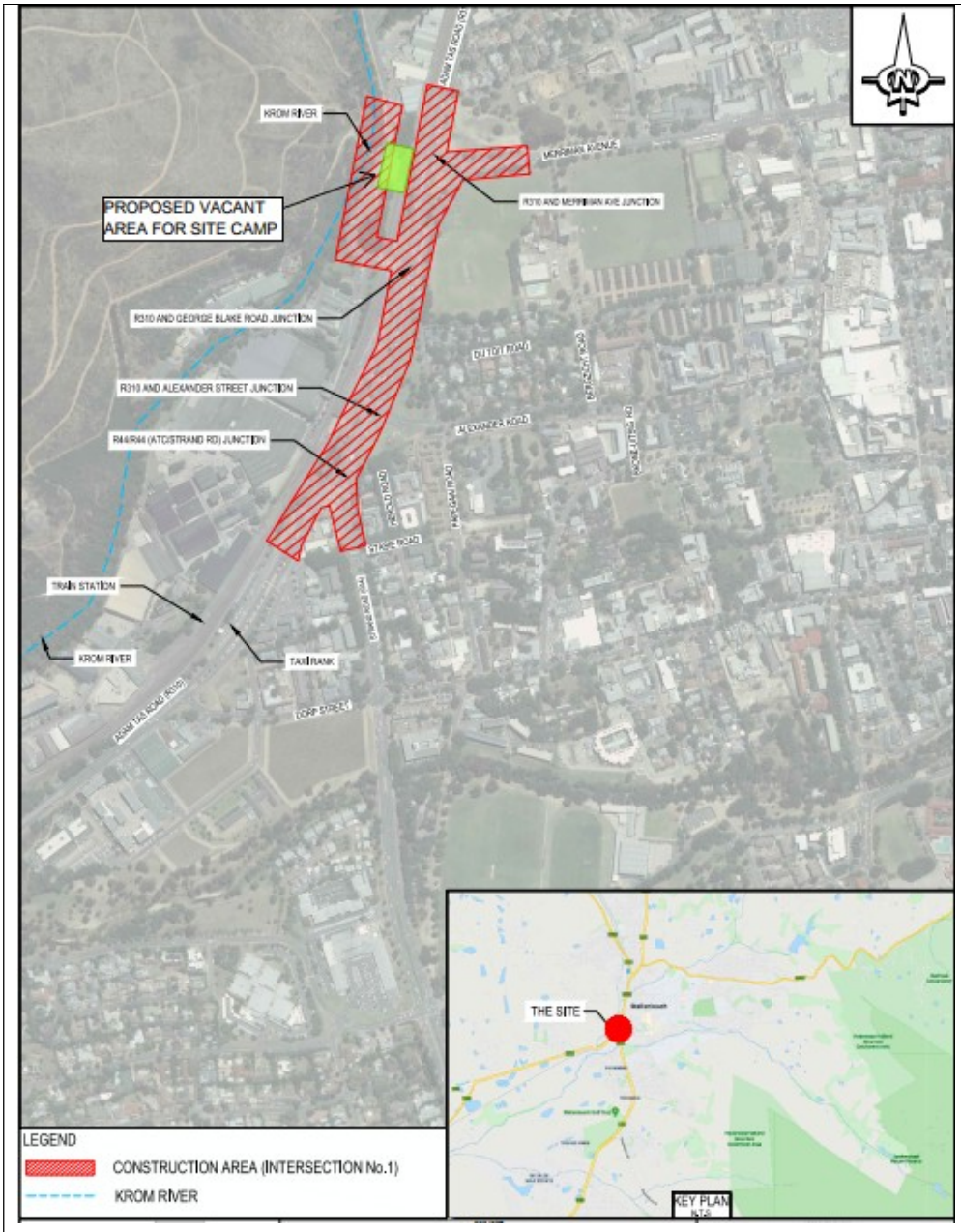

STELLENBOSCH MUNICIPALITY
BID NO. B/SM 21/27

MAIN ROAD INTERSECTION IMPROVEMENTS: STRAND / ADAM TAS / ALEXANDER JUNCTION

PROPOSED SITE OFFICE / SITE CAMP

STELLENBOSCH
STELLENBOSCH • PNIEL • FRANSCHHOEK
MUNISIPALITEIT • UMASIPALA • MUNICIPALITY

VOLUME 4: Drawings

Drawing number	Drawing title
STANDARD DETAILS (WESTERN CAPE GOVERNMENT)	
WCS-23-3-C3	WCG: TYPICAL GRID INLET IN CONCRETE SIDE DRAIN
WCS-23-3-C6	WCG: GRID DETAIL TYPE 1
WCS-23-3-C7	WCG GRID DETAIL TYPE 2
STANDARD DETAILS – STELLENBOSCH MUNICIPALITY	
SSW18	SUB SURFACE DRAIN: TYPE 1 (STONE)
SSW19	MANHOLE FOR SUB SURFACE DRAIN
SSW20	RODDING EYE FOR SUBSOIL DRAINS
SW1	VALVE CHAMBER
SW2	FIRE HYDRANT CHAMBER
SW5	THRUST BLOCK FOR 90° BENDS
SW6	THRUST BLOCK FOR TEES
SW7	THRUST BLOCK FOR 45° BENDS
SW8	THRUST BLOCK FOR END CAPS, 11.25° AND 22.5° BENDS
SW14	LOCKING BAR DETAIL
SR2	TYPICAL STOP CONTROLLED INTERSECTION

The following drawings are applicable to the contract and are issued with this tender document and will form part of the Contract Documents as Volume 4.

34092.00-101-01 Rev T0	GENERAL SERVICES LAYOUT
34092.00-101-02 Rev T0	LANDSCAPING AND TREE REMOVAL LAYOUT
34092.00-104-01 Rev T0	STANDARD DETAILS
34092.00-110-01-Rev T0	GEOMETRIC LAYOUTS
34092.00-110-02-Rev T1	ROAD INTERSECTION LAYOUT – PHASE 1
34092.00-111-01 Rev T1	ALEXANDER STREET INBOUND & OUTBOUND LANE LONG SECTIONS - PHASE 1
34092.00-111-03 Rev T1	STRAND RD & ADAM TAS TURNING LANE LONG SECTIONS - PHASE 1
34092.00-112-01-Rev T1	ROAD CROSS SECTIONS LAYOUT (SHEET 1 OF 2) - PHASE 1
34092.00-112-02 Rev T1	ROAD CROSS SECTIONS LAYOUT (SHEET 2 OF 2) - PHASE 1

34092.00-114-01 Rev T1	ROAD MARKING AND SIGNAGE LAYOUT - PHASE 1
34092.00-114-03 Rev T0	ROAD SIGN BOARD SCHEDULE LAYOUT SHEET 1 - PHASE 1
34092.00-114-04 Rev T0	ROAD SIGN BOARD SCHEDULE LAYOUT SHEET 2 - PHASE 1
34092.00-114-05 Rev T0	ROAD SIGN BOARD SCHEDULE LAYOUT SHEET 3 - PHASE 1
34092.00-115-01 Rev T1	ADAM TAS SETTING-OUT POINTS (SHEET 1 OF 3)
34092.00-115-02 Rev T1	ADAM TAS SETTING-OUT POINTS (SHEET 2OF 3)
34092.00-115-03 Rev T1	ADAM TAS SETTING-OUT POINTS (SHEET 3 OF 3)
34092.00-117-01 Rev T1	SIGNALIZATION LAYOUT PHASE 1
34092.00-117-02 Rev T1	DIMENSIONED INTERSECTION LAYOUT - PHASE 1
34092.00-119-01 Rev T1	TRAFFIC ACCOMMODATION LAYOUT PHASE 1 OVERVIEW
34092.00-119-02 Rev T1	TRAFFIC ACCOMMODATION LAYOUT PHASE 2 OVERVIEW
34092.00-119-03 Rev T1	TRAFFIC ACCOMMODATION FOR CONSTRUCTION OF PHASE 1
34092.00-120-01 Rev T0	STANDARD DETAILS STORMWATER LAYOUT – PHASE 1
34092.00-121-01 Rev T0	STANDARD DETAILS STORMWATER LAYOUT
34092.00-121-02 Rev T0	STANDARD DETAILS STORMWATER LAYOUT
34092.00-123-01 Rev T1	SPECIFIC STORMWATER STRUCTURES
34092.00-123-02 Rev T0	STANDARD DETAILS GENERAL ITEMS RET WALL
34092.00-130-01 Rev T0	FOUL SEWER LAYOUT
34092.00-140-01 Rev T0	WATER LAYOUT
34092.00-143-01 Rev T0	STANDARD DETAILS WATER
34092.00-143-02 Rev T0	STANDARD DETAILS WATER
34092.00-170-01 Rev T0	EARTHWORKS LAYOUT & SECTIONS
34092.00-180-01 Rev T0	FENCING LAYOUT
34092.00-190-01 Rev T0	COMMUNICATION AND ELECTRICAL DUCTS LAYOUT
34092.00-190-02 Rev T0	ELECTRICAL HV & MV CABLE RELOCATION LAYOUT
34092.00-200-01 Rev T0	GENERAL NOTES
34092.00-201-01 Rev T0	SITE LAYOUT
34092.00-201-02 Rev T0	SUB-STATION LAYOUT, SECTIONS AND DETAILS
34092.00-201-03 Rev T0	COVER SLABS AT CABLE JOINTS
34092.02-200-01 Rev T1	GENERAL NOTES

34092.02-201-01 Rev T1	FOUNDATION & SURFACE BED LAYOUT
34092.02-202-01 Rev T1	CONCRETE SECTIONS
34092.02-203-01 Rev T1	CONCRETE DETAILS
34092.02-204-01 Rev T1	STRIP FOOTING REBAR LAYOUT & BENDING SCHEDULES
34092.02-204-02 Rev T1	R.C STAIR REBAR LAYOUT & BENDING SCHEDULE
34092.02-600-01 Rev T1	SITE DEVELOPMENT PLAN
34092.02-601-01 Rev T1	EXISTING STRUCTURE – DEMOLITION & NEW WORKS LAYOUT
34092.02-602-01 Rev T1	ARCHITECTURAL LAYOUT, SECTIONS & ELEVATIONS
34092.02-606-01 Rev T1	ARCHITECTURAL DETAILS
34092.02-609-01 Rev T1	DOOR & WINDOW SCHEDULE
34092.00-301-01 Rev T0	STREET LIGHTING DETAIL DRAWINGS
34092.00-312-01 Rev T0	STREET LIGHTING SINGLE LINE DIAGRAM
34092.00-312-02 Rev T0	SUBSTATION SINGLE LINE DIAGRAM - LV
34092.00-421-01 Rev T1	MV SWITCHGEAR LINE DIAGRAM
34092.00-431-01 Rev T0	STREET LIGHTING LAYOUT SHEET

Western Cape Government

STANDARD PLANS

PLEASE NOTE THAT THIS BOOK OF PLANS
IS UPDATED ON A CONTINUOUS BASIS

WESTERN CAPE GOVERNMENT
DEPARTMENT OF INFRASTRUCTURE
INDEX - STANDARD PLANS

NOTES :
SEE INDEX 3 FOR KEY TO NUMBERING SYSTEM
"D.." DENOTES DESIGN STANDARD PLANS
"C.." DENOTES CONSTRUCTION STANDARD PLANS
* INDICATES DRAWINGS AWAITING APPROVAL

INDEX	1	INDEX SHEET 1 OF 2	2
	2	INDEX SHEET 2 OF 2	3
	3	KEY TO NUMBERING SYSTEM	4

COLTO SECTION		GROUP NAME	DESCRIPTION	DESIGN DRAWING	CONSTRUCTION DRAWING	AMENDMENT No.	AMENDMENT DATE	PDF REFERENCE
1100	1	CROSS SECTIONS	TYPICAL RURAL CROSS SECTIONS - SURFACED	WCS-11-1-D1		0	Oct-23	5
			STANDARD LOW VOLUME CROSS SECTIONS	WCS-11-1-D2		0	Oct-23	6
	2	INTERSECTIONS	INTERSECTION AND FARM ACCESS DETAILS		WCS-11-2-C1	0	Oct-23	7
			LAYOUT OF TYPICAL PASSING LANE AT 4-LEGGED INTERSECTIONS	WCS-11-2-D1		0	Oct-23	8
			DRAINAGE AT INTERSECTIONS AND FARM ACCESSES	WCS-11-2-D2		0	Oct-23	9
			T-JUNCTIONS - SINGLE CARRIAGEWAY	WCS-11-2-D3		0	Oct-23	10
			4-WAY INTERSECTION - SINGLE CARRIAGEWAY	WCS-11-2-D4		0	Oct-23	11
	3	REST AREAS	LAYOUT PLAN OF REST AREA		WCS-11-3-C1	0	Oct-23	12
			DETAIL OF TABLE AND BENCHES AT REST AREAS		WCS-11-3-C2	0	Oct-23	13
			REINFORCING DETAIL FOR TABLE AND BENCHES		WCS-11-3-C3	0	Oct-23	14
	4	RURAL BUS STOPS	BUS STOP TREATMENT TYPE : PERI-URBAN SURFACED SHOULDER AND BUS STOP WITH 1.5m REDUCED BUFFER (MINIMUM)	WCS-11-4-D1		0	Oct-23	15
			BUS STOP TREATMENT TYPE : PERI-URBANSURFACED SHOULDER AND BUS STOP WITH 2.5m REDUCED BUFFER (MINIMUM)	WCS-11-4-D2		0	Oct-23	16
			BUS STOP TREATMENT TYPE 1A ALTERNATIVE FOR TYPE 1 STOP ON HIGHER ORDER INTERSECTIONS	WCS-11-4-D3		0	Oct-23	17
			BUS STOP TREATMENT TYPE 2 SURFACED SHOULDER AND BUS STOP WITH 1.2m REDUCED BUFFER (MINIMUM)	WCS-11-4-D4		0	Oct-23	18
			BUS STOP TREATMENT TYPE 2A ALTERNATIVE FOR TYPE 2 STOP ON HIGHER ORDER INTERSECTIONS	WCS-11-4-D5		0	Oct-23	19
			BUS STOP TREATMENT TYPE 3 SURFACED SHOULDER AND BUS STOP WITHOUT BUFFER	WCS-11-4-D6		0	Oct-23	20
			BUS STOP TREATMENT TYPE 4 UNSURFACED SHOULDER AND BUS STOP WITHOUT BUFFER	WCS-11-4-D7		0	Oct-23	21
			BUS STOP TREATMENT TYPE 5 IN LANE BUS STOP	WCS-11-4-D8		0	Oct-23	22
			ROAD MARKINGS AND SIGNAGE	WCS-11-4-D9		0	Oct-23	23
			BUS STOP TREATMENT TYPE : PERI-URBAN SURFACED SHOULDER AND BUS STOP WITH 1.5m REDUCED BUFFER (MINIMUM)	WCS-11-4-D10		0	Oct-23	24
	5	AUXILIARY LANES	GEOMETRIC LAYOUT	WCS-11-5-D1		0	Oct-23	25
1300	1	CONTRACT NAME BOARDS	CONTRACT NAME BOARD-ENGLISH		WCS-13-1-C1	0	Oct-23	26
			CONTRACT NAME BOARD-AFRIKAANS		WCS-13-1-C2	0	Oct-23	27
			CONTRACT NAME BOARD-XHOSA		WCS-13-1-C3	0	Oct-23	28
			CONTRACT NAME BOARD - HIGHER ORDERS ROADS		WCS-13-1-C4	0	Oct-23	29
			ROUTINE ROAD MAINTENANCE CONTRACT NAME BOARD		WCS-13-1-C5	0	Oct-23	30
			CONTRACT NAME BOARD - EPWP PRO-FORMA		WCS-13-1-C6	0	Oct-23	31
			CONTRACT NAME BOARD - S'HAMBA SONKE		WCS-13-1-C7	0	Oct-23	32
1400	1	HOUSING, OFFICES AND LABORATRIES FOR THE ENGINEER'S SITE PERSONNEL	TYPICAL DETAILS		WCS-14-1-C1	0	Oct-23	33
1500	1	ACCOMMODATION OF TRAFFIC	SINGLE CARRIAGEWAY ROAD STOP/GO CONTROL	WCS-15-1-D1		0	Oct-23	34
			SINGLE CARRIAGEWAY ROAD PARTIAL ROADWAY CLOSURE - TWO WAY TRAFFIC	WCS-15-1-D2		0	Oct-23	35
			FOUR LANE DUAL CARRIAGEWAY ONE LANE CLOSED	WCS-15-1-D3		0	Oct-23	36
			FOUR LANE DUAL CARRIAGEWAY SHOULDER CLOSED	WCS-15-1-D4		0	Oct-23	37
			TYPICAL ROAD SIGN LAYOUT FOR UPGRADING A T-INTERSECTION	WCS-15-1-D5		0	Oct-23	38
			ROAD SIGN LAYOUT FOR MATERIALS INVESTIGATION WORK	WCS-15-1-D6		0	Oct-23	39
			MOBILE WORK ON ROAD CENTRE LINE	WCS-15-1-D7		0	Oct-23	40
			TRAFFIC SIGNAL CONTROL AT NIGHT FOR HALF WIDTH CONSTRUCTION	WCS-15-1-D8		0	Oct-23	41
			GRAVEL ROADS (LOW VOLUME <100/DAY ONE LANE CLOSED)	WCS-15-1-D9		0	Oct-23	42
			TYPICAL ROAD SIGN LAYOUT FOR JUST COMPLETED RESEAL/RESURFACING WORK	WCS-15-1-D10		0	Oct-23	43
2100	1	OPEN DRAINS	DETAIL OF OPEN DRAIN	WCS-21-1-D1		0	Oct-23	44
	2	BANK AND DYKES	TYPICAL DETAIL OF DYKES		WCS-21-2-C1	0	Oct-23	45
			DETAILS OF DYKES AT CUTTINGS		WCS-21-2-C2	0	Oct-23	46
	3	SUBSOIL DRAINAGE	TYPICAL LAYOUT OF SUBSOIL DRAINS		WCS-21-3-C1	0	Oct-23	47
			DETAILS OF SUBSOIL SYSTEMS		WCS-21-3-C2	0	Oct-23	48
			TYPICAL DETAILS OF CLEANING EYES		WCS-21-3-C3	0	Oct-23	49
			TYPICAL DETAILS OF OUTLET STRUCTURES		WCS-21-3-C4	0	Oct-23	50

COLTO SECTION		GROUP NAME	DESCRIPTION	DESIGN DRAWING	CONSTRUCTION DRAWING	AMENDMENT No.	AMENDMENT DATE	PDF REFERENCE
2200	1	PREFABRICATED CONCRETE RECTANGULAR PORTAL CULVERTS	INLET AND OUTLET DETAIL FOR HEADWALL HEIGHTS (HH) NOT EXCEEDING 1.200m		WCS-22-1-C1	0	Oct-23	51
			REINFORCEMENT AND GENERAL DETAILS FOR HEADWALL HEIGHTS (HH) NOT EXCEEDING 1,200m		WCS-22-1-C2	0	Oct-23	52
			INLET AND OUTLET DETAILS FOR HEADWALL HEIGHTS (HH) EXCEEDING 1,200m NOT EXCEEDING 1,800m		WCS-22-1-C3	0	Oct-23	53
			REINFORCEMENT AND GENERAL DETAILS FOR HEADWALL HEIGHTS (HH) NOT EXCEEDING 1,200m NOT EXCEEDING 1,800m		WCS-22-1-C4	0	Oct-23	54
			INLET AND OUTLET DETAILS FOR HEADWALL HEIGHTS (HH) EXCEEDING 1,800m NOT EXCEEDING 3.600m		WCS-22-1-C5	0	Oct-23	55
			INLET AND OUTLET DETAILS FOR HEADWALL HEIGHTS (hh) EXCEEDING 1,800m NOT EXCEEDING 3.600m		WCS-22-1-C6	0	Oct-23	56
			GENERAL DETAILS OF WINGWALLS AND SETTING OUT		WCS-22-1-C7	0	Oct-23	57
			INSTALLATION AND GENERAL NOTES		WCS-22-1-C8	0	Oct-23	58
			TABULATIONS AND DESIGN NOTES	WCS-22-1-D1		0	Oct-23	59
	2	PREFABRICATED CONCRETE PIPE CULVERTS	INSTALLATION DETAILS		WCS-22-2-C1	0	Oct-23	60
			REINFORCEMENT DETAILS FOR HEADWALL HEIGHTS (HH) EXCEEDING NOT EXCEEDING 1,200m		WCS-22-2-C2	0	Oct-23	61
			REINFORCEMENT DETAILS FOR HEADWALL HEIGHTS (HH) EXCEEDING NOT EXCEEDING 1,200m		WCS-22-2-C3	0	Oct-23	62
			REINFORCEMENT DETAILS FOR HEADWALL HEIGHTS (HH) EXCEEDING 1,200m NOT EXCEEDING 1,800m		WCS-22-2-C4	0	Oct-23	63
			REINFORCEMENT DETAILS FOR HEADWALL HEIGHTS (HH) EXCEEDING 1,200m NOT EXCEEDING 1,800m		WCS-22-2-C5	0	Oct-23	64
			GENERAL DETAILS OF WINGWALLS AND SETTING OUT		WCS-22-2-C6	0	Oct-23	65
			TABULATIONS AND DESIGN NOTES	WCS-22-2-D1		0	Oct-23	66
	3	MANHOLES	DETAILS OF COMBINED SINGLE KERB INLET AND MANHOLE		WCS-22-3-C1	0	Oct-23	67
			DETAILS OF COMBINED DOUBLE KERB INLET AND MANHOLE		WCS-22-3-C2	0	Oct-23	68
			TYPICAL DETAIL OF KERB INLET		WCS-22-3-C3	0	Oct-23	69
			TYPICAL DETAIL OF MANHOLE AND KERB INLET WITH CHUTE		WCS-22-3-C4	0	Oct-23	70
			TYPICAL STORMWATER MANHOLES		WCS-22-3-C5	0	Oct-23	71
		SERVICE DUCTS	DETAILS OF SERVICES DUCTS FOR RURAL ROADS		WCS-22-4-C1	0	Oct-23	72
			DETAILS OF SERVICE DUCT MARKERS		WCS-22-4-C2	0	Oct-23	73
		CONCRETE CULVERTS	INLET AND OUTLET PROTECTION DETAILS	WCS-22-5-D1		0	Oct-23	74
		PREFABRICATED CONCRETE CULVERTS	TYPICAL DRAINAGE SCHEDULE DRAWING	WCS-22-6-D1		0	Oct-23	75
2300		KERBS	PRECAST KERB DETAILS		WCS-23-1-C1	0	Oct-23	76
			BARRIER KERB		WCS-23-1-C2	0	Oct-23	77
			SEMI AND MOUNTABLE KERBS		WCS-23-1-C3	0	Oct-23	78
			EDGE BEAMS, CHANNELS AND PLACING OF KERB UNITS		WCS-23-1-C4	0	Oct-23	79
	2	CHUTES	PRECAST CONCRETE CHUTE FOR FILLS - DROP INLET		WCS-23-2-C1	0	Oct-23	80
			DOWNPIPE IFOR FILLS-DROP INLETS		WCS-23-2-C2	0	Oct-23	81
			DOWNPIPE IFOR FILLS-DROP INLETS		WCS-23-2-C3	0	Oct-23	82
			DOWNCHUTE INLET AT CATCHWATER BANKS		WCS-23-2-C4	0	Oct-23	83
			DOWNPIPE INLET AT CATCHWATER BANKS		WCS-23-2-C5	0	Oct-23	84
	3	SIDE DRAIN	CONCRETE SIDE DRAIN		WCS-23-3-C1	0	Oct-23	85
			START OF CONCRETE SIDE DRAIN IN CUTTINGS		WCS-23-3-C2	0	Oct-23	86
			TYPICAL GRID INLET IN CONCRETE SIDE DRAIN		WCS-23-3-C3	0	Oct-23	87
			TYPICAL GRID INLET WITH DOWNPIPE		WCS-23-3-C4	0	Oct-23	88
			TYPICAL GRID INLET WITH DOWNCHUTE		WCS-23-3-C5	0	Oct-23	89
			GRID DETAIL TYPE 1		WCS-23-3-C6	0	Oct-23	90
			GRID DETAIL TYPE 2		WCS-23-3-C7	0	Oct-23	91
			TRANSITION FROM UNLINED SIDE DRAIN TO CONCRETE SIDE DRAIN		WCS-23-3-C8	0	Oct-23	92
			TRANSITION FROM CONCRETE SIDE DRAIN TO UNLINED SIDE DRAIN		WCS-23-3-C9	0	Oct-23	93
			SETTING OUT OF END OF SIDE DRAIN		WCS-23-3-C10	0	Oct-23	94
			CONCRETE SIDE DRAIN OUTLET TYPE 1		WCS-23-3-C11	0	Oct-23	95
			CONCRETE SIDE DRAIN OUTLET TYPE 2		WCS-23-3-C12	0	Oct-23	96
			CONCRETE SIDE DRAIN OUTLET TYPE 3		WCS-23-3-C13	0	Oct-23	97
			ACCESS IN CONCRETE SIDE DRAIN WITH SLOPE >2,0%		WCS-23-3-C14	0	Oct-23	98
			ACCESS IN CONCRETE SIDE DRAIN WITH SLOPE <2,0%		WCS-23-3-C15	0	Oct-23	99
			TYPICAL SIDE DRAIN SECTIONS	WCS-23-3-D1		0	Oct-23	100
			EARTH SIDE DRAINS	WCS-23-3-D2		0	Oct-23	101
3900	1	PATCHING AND REPAIRING EDGE BREAKS	TYPICAL REPAIRS TO LAYERWORKS FAILURES		WCS-39-1-C1	0	Oct-23	102

WESTERN CAPE GOVERNMENT
DEPARTMENT OF INFRASTRUCTURE
INDEX - STANDARD PLANS

NOTES :
SEE INDEX 3 FOR KEY TO NUMBERING SYSTEM
"D.." DENOTES DESIGN STANDARD PLANS
"C.." DENOTES CONSTRUCTION STANDARD PLANS
* INDICATES DRAWINGS AWAITING APPROVAL

COLTO SECTION	GROUP NAME		DESCRIPTION	DESIGN DRAWING	CONSTRUCTION DRAWING	AMENDMENT No.	AMENDMENT DATE	PDF REFERENCE
5100	1	PITCHING, STONEWORK AND PROTECTION AGAINST EROSION	TYPICAL GABION PROTECTION DETAILS	WCS-51-1-D1		0	Oct-23	103
			CAUSEWAY PROTECTION DETAILS	WCS-51-1-D2		0	Oct-23	104
			ROCK SLOPE PROTECTION DETAILS	WCS-51-1-D3		0	Oct-23	105
			TYPICAL STONE PITCHING DETAILS	WCS-51-1-D4		0	Oct-23	106
5200	1	GABIONS	ASSEMBLY AND ERECTION OF GABION BOXES		WCS-52-1-C1	0	Oct-23	107
			ASSEMBLY AND ERECTION OF GABION MATTRESSES		WCS-52-1-C2	0	Oct-23	108
5300	1	GUIDE BLOCKS	DETAIL OF GUIDE BLOCKS		WCS-53-1-C1	0	Oct-23	109
5400	1	GUARDRAILS	GENERAL DETAILS OF GUARDRAILS		WCS-54-1-C1	0	Oct-23	110
			POSITIONING OF SIDE DRAIN AND ASPHALT BERM AT GUARDRAILS		WCS-54-1-C2	0	Oct-23	111
			GUARDRAILS AT HAZARDS		WCS-54-1-C3	0	Oct-23	112
			GUARDRAIL ON CULVERTS		WCS-54-1-C4	0	Oct-23	113
			GUARDRAIL ATTACHMENT AT BALUSTRADES		WCS-54-1-C5	0	Oct-23	114
			ALTERNATIVE GUARDRAIL ATTACHMENT AT BALUSTRADES		WCS-54-1-C6	0	Oct-23	115
			DETAILS OF BULLNOSE AND GUARDRAIL DELINEATORS		WCS-54-1-C7	0	Oct-23	116
5500	1	FENCING	DETAIL OF VERMIN PROOF FENCING		WCS-55-1-C1	0	Oct-23	117
			DETAIL OF STOCK PROOF FENCING		WCS-55-1-C2	0	Oct-23	118
			TYPICAL DETAILS OF FENCING AT UNDERPASSES		WCS-55-1-C3	0	Oct-23	119
			TYPICAL DETAILS OF FENCING AT RIVER CROSSING		WCS-55-1-C4	0	Oct-23	120
			DETAIL OF GATES		WCS-55-1-C5	0	Oct-23	121
			DETAIL OF VELDSPAN FENCING		WCS-55-1-C6	0	Oct-23	122
			SECURITY FENCE		WCS-55-1-C7	0	Oct-23	123
			SECURITY FENCE GATE		WCS-55-1-C8	0	Oct-23	124
			DETAILS OF GAME PROOF FENCING - GROUPS I	WCS-55-1-D1		0	Oct-23	125
			DETAILS OF GAME PROOF FENCING - GROUPS II AND III	WCS-55-1-D2		0	Oct-23	126
			DETAIL OF 2400mm HIGH PALISADE FENCING	WCS-55-1-D3		0	Oct-23	127
			DETAIL OF 1300mm HIGH PALISADE FENCING	WCS-55-1-D4		0	Oct-23	128
			ROTATING GATE IN PALISADE FENCING	WCS-55-1-D5		0	Oct-23	129
			SLIDING GATE IN PALISADE FENCING	WCS-55-1-D6		0	Oct-23	130
			STANDARD GATE IN PALISADE FENCING	WCS-55-1-D7		0	Oct-23	131
	2	MOTOR GRID GATES	APPROACHES TO SINGLE MOTOR GRID GATE TYPE A		WCS-55-2-C1	0	Oct-23	132
			SINGLE MOTOR GRID GATE TYPE A		WCS-55-2-C2	0	Oct-23	133
			APPROACHES TO DOUBLE MOTOR GRID GATE TYPE B		WCS-55-2-C3	0	Oct-23	134
			DETAIL OF DOUBLE MOTOR GRID GATE TYPE B		WCS-55-2-C4	0	Oct-23	135
			REINFORCEMENT DETAILS OF SLAB TYPE A AND B		WCS-55-2-C5	0	Oct-23	136
			REINFORCEMENT DETAILS AND BENDING SCHEDULE		WCS-55-2-C6	0	Oct-23	137
5600	1	ROAD SIGNS	GROUND MOUNTED SIGNS - POSITIONS		WCS-56-1-C1	0	Oct-23	138
			GROUND MOUNTED SIGNS - MOUNTING DETAILS		WCS-56-1-C2	0	Oct-23	139
			LARGER SIGNS - PANEL DETAILS		WCS-56-1-C3	0	Oct-23	140
			LARGER SIGN - PANEL JOINT DETAIL		WCS-56-1-C4	0	Oct-23	141
			SMALLER SIGNS - PANEL REINFORCING DETAIL		WCS-56-1-C5	0	Oct-23	142
			DANGER PLATE DETAILS		WCS-56-1-C6	0	Oct-23	143
			REGULATORY AND WARNING SINGS - SINGLE SUPPORT DETAIL		WCS-56-1-C7	0	Oct-23	144
			CHEVRON SIGNS - ERECTION DETAIL		WCS-56-1-C8	0	Oct-23	145
			RIVER NAME BOARD		WCS-56-1-C9	0	Oct-23	146
			TOWN NAME SIGN		WCS-56-1-C10	0	Oct-23	147
			GROUND MOUNTED SIGNS - SUPPORT DETAIL	WCS-56-1-D1		0	Oct-23	148
			GROUND MOUNTED SIGNS - BRACED SUPPORT DETAIL	WCS-56-1-D2		0	Oct-23	149
			ROAD SIGNS SCHEDULE	WCS-56-1-D3		0	Oct-23	150
	2	MARKER SIGNS	KILOMETER POST - CONCRETE KILOMETER MARKER	WCS-56-2-D1		0	Oct-23	151
			DISTANCE MARKER PLATE	WCS-56-2-D2		0	Oct-23	152
5700		ROAD MARKERS	AUXILIARY LANES	WCS-57-1-D1		0	Oct-23	153
			RUMBLE STRIPS	WCS-57-1-D2		0	Oct-23	154
			ROAD SIGNS AND MARKINGS AT LEVEL CROSSINGS	WCS-57-1-D3		0	Oct-23	155
			POSITIONING OF ROAD SIGNS AND MARKING AT LEVEL CROSSINGS	WCS-57-1-D4		0	Oct-23	156
			ROAD MARKINGS FOR LANE REDUCTION	WCS-57-1-D5		0	Oct-23	157
			ROAD SIGNS AND MARKINGS AT SINGLE LANE STRUCTURE	WCS-57-1-D6		0	Oct-23	158

COLTO SECTION	GROUP NAME		DESCRIPTION	DESIGN DRAWING	CONSTRUCTION DRAWING	AMENDMENT No.	AMENDMENT DATE	PDF REFERENCE
6000	1	BRIDGES	RURAL STRUCTURE STANDARD WIDTHS	WCS-60-1-D1		0	Oct-23	159
			RURAL STRUCTURE STANDARD CLEARANCES	WCS-60-1-D2		0	Oct-23	160
	2	BALUSTRADES AND BARRIERS	DETAILS OF TYPES A AND B CAST IN-SITU BRIDGE BALUSTRADES	WCS-60-2-D1		0	Oct-23	161
			DETAILS OF TYPES C AND D CAST IN-SITU BRIDGE BALUSTRADES	WCS-60-2-D2		0	Oct-23	162
			DETAILS OF IN SITU TYPES B AND C BRIDGE BALUSTRADES WITH LAMP POSTS	WCS-60-2-D3		0	Oct-23	163
			FENCING DETAILS AT PEDESTRIAN WALKWAYS	WCS-60-2-D4		0	Oct-23	164
			DETAILS SHOWING ANCHORING OF GUARDRAILING TO BALUSTRADE ENDS	WCS-60-2-D5		0	Oct-23	165
			DETAILS SHOWING ANCHORING OF GUARDRAILING TO BALUSTRADE ENDS	WCS-60-2-D5		0	Oct-23	166
			TYPICAL DECK DRAINAGE DETAIL	WCS-60-2-D6		0	Oct-23	167
	3	STANDARD R.C. CANTILEVER RETAINING WALLS	WALL FOR BACKFILL HORIZONTAL (HEIGHT: 1.5m TO 3.0m)	WCS-60-3-D1		0	Oct-23	168
			WALLS FOR BACKFILL AT A 1:1,5 SLOPE (HEIGHT: 1.5m TO 3.0m)	WCS-60-3-D2		0	Oct-23	169
	4	INSITU CAST CONCRETE RECTANGULAR PORTAL CULVERTS	GENERAL DETAILS OF CULVERTS AT 90°		WCS-60-4-C1	0	Oct-23	170
			GENERAL DETAILS OF SKEW CULVERTS		WCS-60-4-C2	0	Oct-23	171
			REINFORCEMENT FOR WINGWALLS AND HEADWALLS HEIGHTS (HH) NOT EXCEEDING 3,6m		WCS-60-4-C3	0	Oct-23	172
			REINFORCEMENT DETAILS FOR CULVERTS		WCS-60-4-C4	0	Oct-23	173
			CONCRETE AND REINFORCEMENT TABULATIONS		WCS-60-4-C5	0	Oct-23	174
			GENERAL DETAILS OF WINGWALLS AND SETTING OUT		WCS-60-4-C6	0	Oct-23	175
			TABULATIONS AND DESIGN NOTES		WCS-60-4-C7	0	Oct-23	176
			SETTING OUT	WCS-60-4-D1		0	Oct-23	177
			TABULATIONS FOR SPANS 1,0 - 4,0m	WCS-60-4-D2		0	Oct-23	178
			TABULATIONS FOR SPANS 4,0m - 6,0m	WCS-60-4-D3		0	Oct-23	179
			REINFORCEMENT DETAILS	WCS-60-4-D4		0	Oct-23	180
	5	MEDIAN BARRIERS	F-SHAPE MEDIAN BARRIER TYPE 1 (850mm HIGH)	WCS-60-5-D1		0	Oct-23	181
			F-SHAPE MEDIAN BARRIER TYPE 2 (1065mm HIGH)	WCS-60-5-D2		0	Oct-23	182
			F-SHAPE MEDIAN BARRIER TYPE 3 (AT LAMP POST)	WCS-60-5-D3		0	Oct-23	183
			F-SHAPE MEDIAN BARRIER TRANSITION SECTION	WCS-60-5-D4		0	Oct-23	184
			F-SHAPE MEDIAN BARRIER JOINT DETAIL	WCS-60-5-D5		0	Oct-23	185
			F-SHAPE MEDIAN BARRIER END DETAIL	WCS-60-5-D6		0	Oct-23	186
	6	CAUSEWAYS PREFABRICATED	PORTAL CULVERTS (H<1,5m)	WCS-60-6-D1		0	Oct-23	187
			CONCRETE PIPE CULVERTS	WCS-60-6-D2		0	Oct-23	188
			GENERAL DETAILS	WCS-60-6-D3		0	Oct-23	189
			REINFORCMENT DETAILS	WCS-60-6-D4		0	Oct-23	190
	7	CAUSEWAYS CAST IN SITU	PORTAL CULVERTS (H<1,5m)	WCS-60-7-D1		0	Oct-23	191
			GENERAL DETAILS	WCS-60-7-D2		0	Oct-23	192
			PORTAL CULVERT SIZE DETAILS	WCS-60-7-D3		0	Oct-23	193
			REINFORCEMENT DETAILS	WCS-60-7-D4		0	Oct-23	194
	8	STRUCTURE NUMBERING	STRUCTURE NUMBER FOR BRIDGES, CULVERTS AND CAUSEWAYS	WCS-60-8-D1		0	Oct-23	195
			STRUCTURE NUMBER FOR WALLS - GABIONS AND CONCRETE	WCS-60-8-D2		0	Oct-23	196
			STRUCTURE NUMBER FOR GANTRIES	WCS-60-8-D3		0	Oct-23	197
			STRUCTURE NUMBER FOR GANTRIES PAINTED	WCS-60-8-D4		0	Oct-23	198
	9	STRUCTURE REHABILITATION	CORRUGATED METAL CULVERT INVERT LINING	WCS-60-9-D1		0	Oct-23	199
			TYPICAL REPAIR METHODS 1 - CONCRETE	WCS-60-9-D2		0	Oct-23	200
			TYPICAL REPAIR METHODS 2 - JOINTS	WCS-60-9-D3		0	Oct-23	201
			POST AND RAIL BALUSTRADE REPAIR DETAILS	WCS-60-9-D4		0	Oct-23	202
			MAJOR CULVERT REPAIRS EXAMPLE DRAWING	WCS-60-9-D5		0	Oct-23	203
			BRIDGE REPAIRS EXAMPLE DRAWING	WCS-60-9-D6		0	Oct-23	204
			MINOR REPAIRS AT MAJOR CULVERT - EXAMPLE DRAWING	WCS-60-9-D7		0	Oct-23	205
	10	TYPICAL DRAWING DETAILS	BENDING SCHEDULE EXAMPLE	WCS-60-10-D1		0	Oct-23	206
9000	1	LIGHTING	STREET LIGHTING - TYPICAL DETAILS	WCS-90-1-D1		0	Oct-23	207
			STREET LIGHTING - POLE POSITIONS	WCS-90-1-D2		0	Oct-23	208
	2	TRAFFIC SIGNALS	ERECTION DETAILS	WCS-90-2-D1		0	Oct-23	209
			STANDARD POLE AND CONTROLLER BASE DETAILS	WCS-90-2-D2		0	Oct-23	210
			CANTILEVER POLE DETAILS	WCS-90-2-D3		0	Oct-23	211
			TYPICAL TIMING PLAN	WCS-90-2-D4		0	Oct-23	212
	3	DRAWING TITLE BLOCKS	DRAWING FILING STRUCTURE	WCS-90-3-D1		0	Oct-23	213
			LONGITUDINAL SECTION TITLE BLOCK	WCS-90-3-D2		0	Oct-23	214
			WCG TITLE BLOCK DETAILS AND LAYOUT	WCS-90-3-D3		0	Oct-23	215
	4	TENDER DOCUMENTS	A2 DRAWING BOOK FRONT COVER	WCS-90-4-D1		0	Oct-23	216
			A3 MATERIALS INVESTIGATION REPORT COVER	WCS-90-4-D2		0	Oct-23	217

"C.." DENOTES CONSTRUCTION STANDARD PLAN
"D.." DENOTES DESIGN STANDARD PLAN

GROUP NUMBER

COLTO SECTION REFERENCE (eg. 2200)

WESTERN CAPE STANDARD PLAN

WCS/22/3/C2

COLTO SECTION	GROUP NAME		DESCRIPTION	DESIGN DRAWING	CONSTRUCTION DRAWING	AMENDMENT No.	AMENDMENT DATE	PDF REFERENCE
2200	3	MANHOLES	DETAIL OF COMBINED SINGLE KERB INLET AND MANHOLE		WCS/22/3/C1			66
			DETAIL OF COMBINED DOUBLE KERB INLET AND MANHOLE		WCS/22/3/C2			67

"C.." STANDARD PLANS ISSUED FOR CONSTRUCTION
APPROVAL TO BE OBTAINED FOR ANY CHANGES TO THESE
CONSTRUCTION STANDARD PLANS

"D.." STANDARD PLANS FOR DESIGN PURPOSES

DESCRIPTION OF DRAWING

DESCRIPTION OF SECTION / SUB-SECTION

GROUP NUMBER

SECTION NUMBER IN COLTO STANDARD SPECIFICATIONS
FOR ROAD AND BRIDGE WORKS FOR STATE ROAD AUTHORITIES
(eg. 2200)

KEY TO STANDARD PLAN NUMBERING SYSTEM

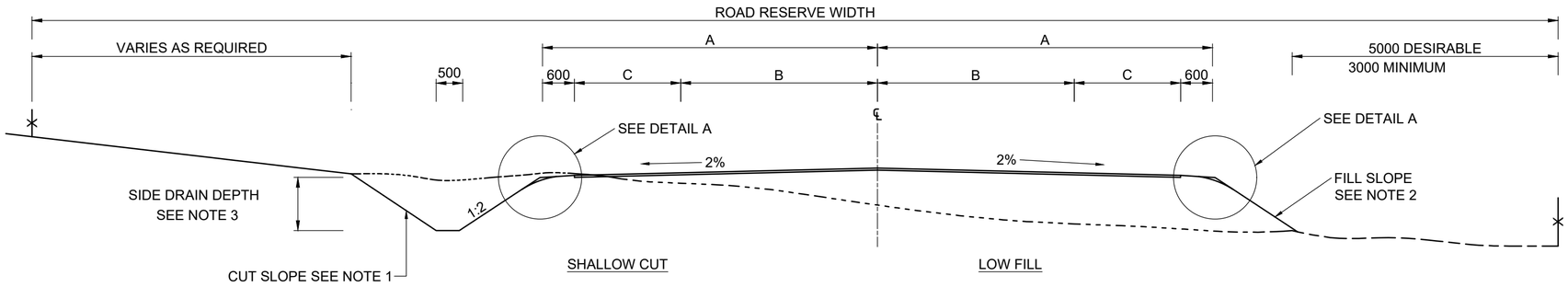

STANDARD CROSS SECTION

NOTES:

1. CUT SLOPE:
   1:0,25 IN ROCK
   1:1 IN SOFT ROCK
   1:1,50 IN SOFT MATERIAL OR AS DIRECTED
   WHERE CUTS ARE DEEPER THAN 4m, BENCHES MAY BE REQUIRED AS DIRECTED.
   FOR CUTS DEEPER THAN 6m IN CLAY, REFER TO MATERIALS ENGINEER.

2. FILL SLOPES:
   1:2 FILL LESS THAN 4,0m IN HEIGHT
   1:1,5 FILL GREATER THAN 4,0m IN HEIGHT OR AS DIRECTED
   FILLS GREATER THAN 6m IN CLAY SHALL BE REFERRED TO MATERIALS ENGINEER
   BENCHES IN FILL TO BE CONSTRUCTED AT 8m INTERVALS BELOW S.B.P.
   FILLS GREATER THAN 3,5m WITH 1:1,5 SLOPES TO BE EVALUATED FOR GUARDRAIL WARRANTS

3. SIDE DRAIN DEPTH:
   LAYERWORK DEPTH PLUS 200mm OR AS DIRECTED BY MATERIALS ENGINEER.

TABLE 1	
BITUMINOUS SURFACING	APPLICATION
CAPE SEAL	PRIME COAT + 2nd SLURRY
DOUBLE SEAL	PRIME COAT + 7mm STONE
ASPHALT	PRIME COAT

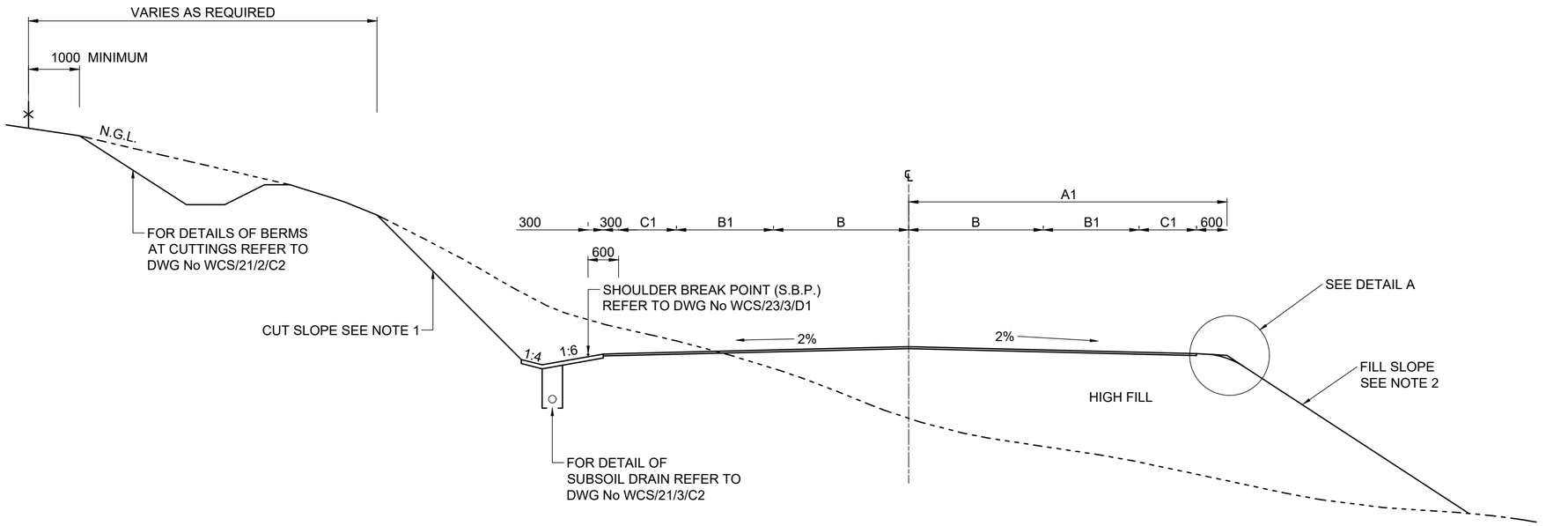

STANDARD CROSS SECTION WITH AUXILIARY LANE

ROAD CLASS				WITH AUXILIARY LANE		
	A	B	C	A1	B1	C1
CLASS 1	6300	3700	2000	9200	3400	1500
CLASS 2	5500	3400	1500	8900	3400	1500
CLASS 3	4900	3400	900			

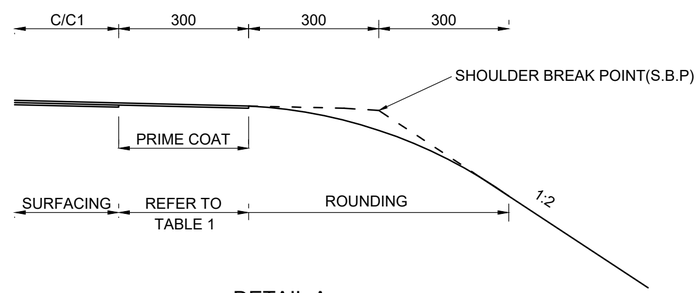

DETAIL A

No.	DATE	ADDITIONS AND AMENDMENTS
0	OCT - 2023	ORIGINAL VERSION

STANDARD PLANS

WESTERN CAPE GOVERNMENT
DEPARTMENT OF INFRASTRUCTURE
TRANSPORT INFRASTRUCTURE BRANCH

CROSS SECTIONS

TYPICAL RURAL CROSS SECTIONS-SURFACED

SCALE : N.T.S.

A2 ORIGINAL

INDEX NO.
WCS/11/1/D1

PLAN NO.
SHEET 1 OF 2

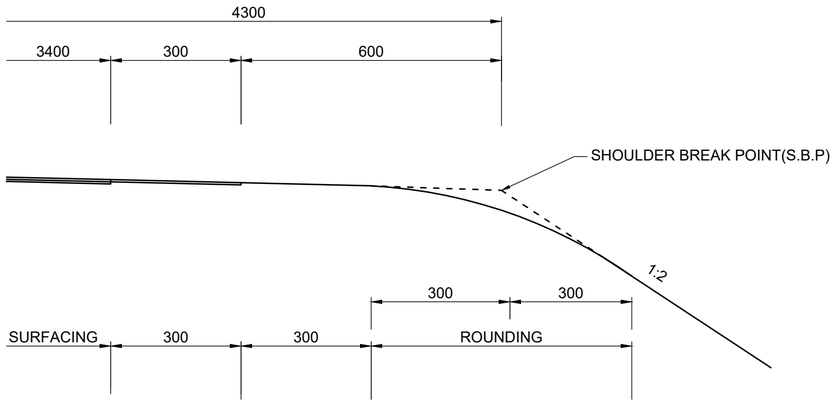

DETAIL A

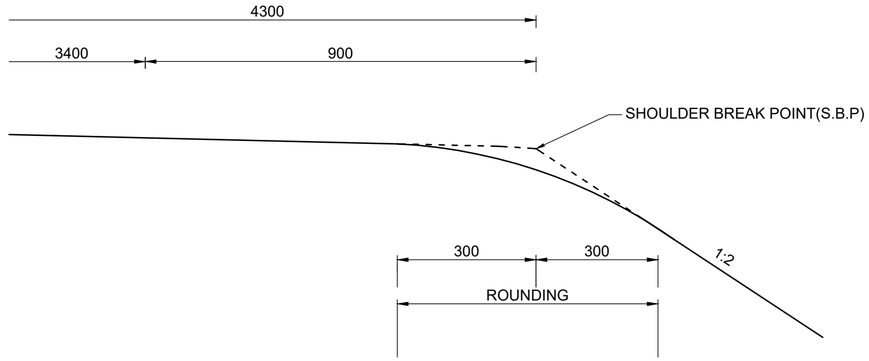

DETAIL B

NOTES :
1. CUT SLOPE :
   1:0,25 IN ROCK
   1:1 IN SOFT ROCK
   1:1,50 IN SOFT MATERIAL OR AS DIRECTED
   WHERE CUTS ARE DEEPER THAN 4m, BENCHES MAY BE REQUIRED AS DIRECTED.
   FOR CUTS DEEPER THAN 6m IN CLAY, REFER TO MATERIALS ENGINEER.

2. FILL SLOPES :
   1:2 FILL LESS THAN 4,0m IN HEIGHT
   1:1,5 FILL GREATER THAN 4,0m IN HEIGHT OR AS DIRECTED
   FILLS GREATER THAN 6m IN CLAY SHALL BE REFERRED TO MATERIALS ENGINEER
   BENCHES IN FILL TO BE CONSTRUCTED AT 8m INTERVALS BELOW S.B.P.
   FILLS GREATER THAN 3.5m WITH 1:1,5 SLOPES TO BE EVALUATED FOR GUARDRAIL WARRANTS

3. SIDE DRAIN DEPTH :
   LAYERWORK DEPTH PLUS 200mm OR AS DIRECTED BY MATERIALS ENGINEER.

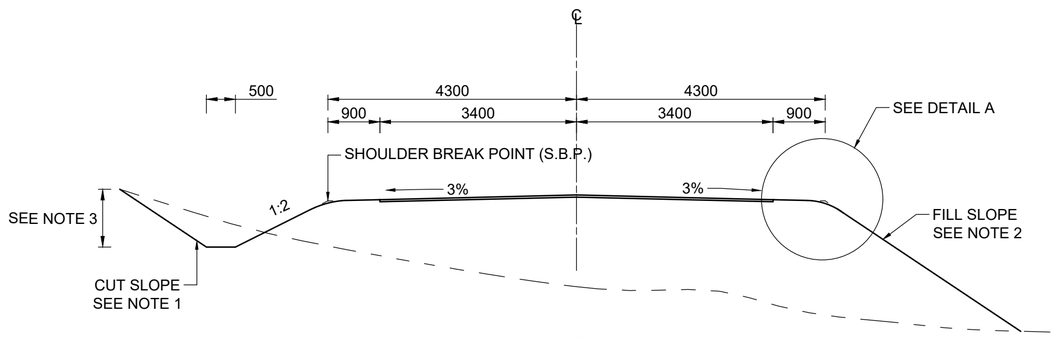

CLASS 4 SURFACED CROSS SECTION

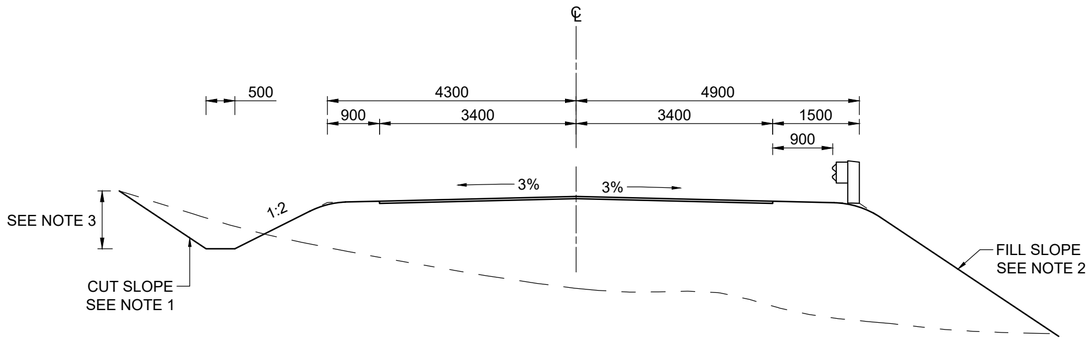

CLASS 4 SURFACED CROSS SECTION (WITH GUARDRAIL)

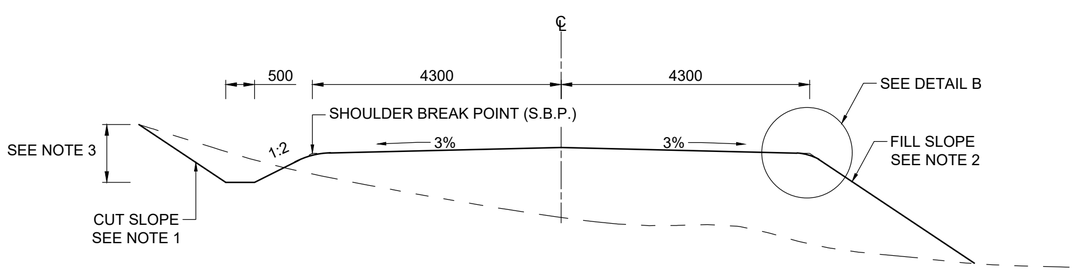

CLASS 4 GRAVEL CROSS SECTION

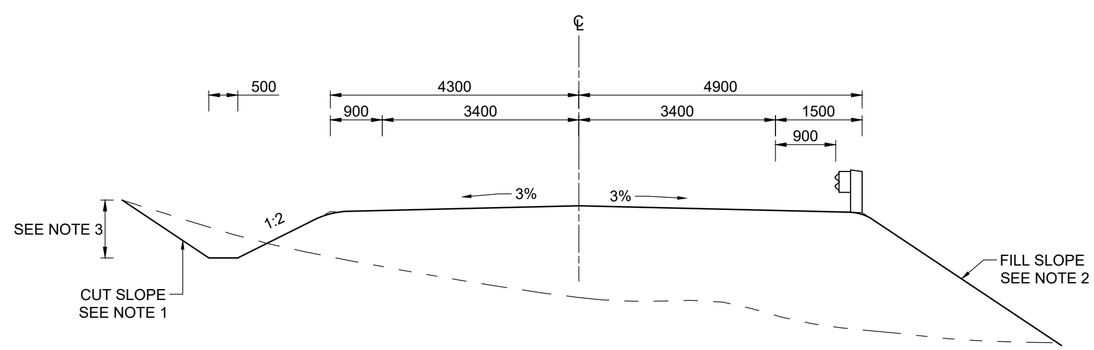

CLASS 4 GRAVEL CROSS SECTION (WITH GUARDRAIL)

No.	DATE	ADDITIONS AND AMENDMENTS
0	OCT - 2023	ORIGINAL VERSION

STANDARD PLANS

WESTERN CAPE GOVERNMENT
DEPARTMENT OF INFRASTRUCTURE
TRANSPORT INFRASTRUCTURE BRANCH

CROSS SECTIONS

STANDARD LOW VOLUME CROSS SECTIONS

SCALE : N.T.S.

A2 ORIGINAL

INDEX NO.
WCS/11/1/D2

PLAN NO.
SHEET 2 OF 2

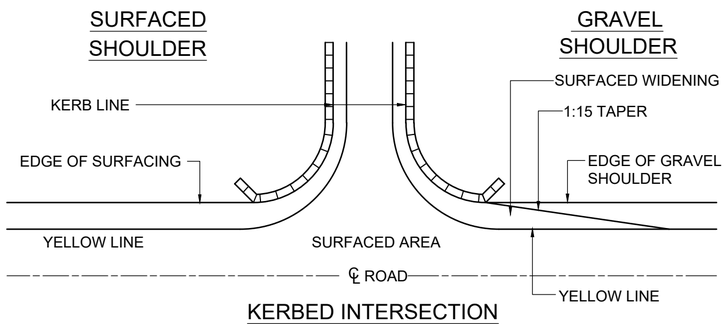

KERBED INTERSECTION
(SEE NOTES 2 AND 3)

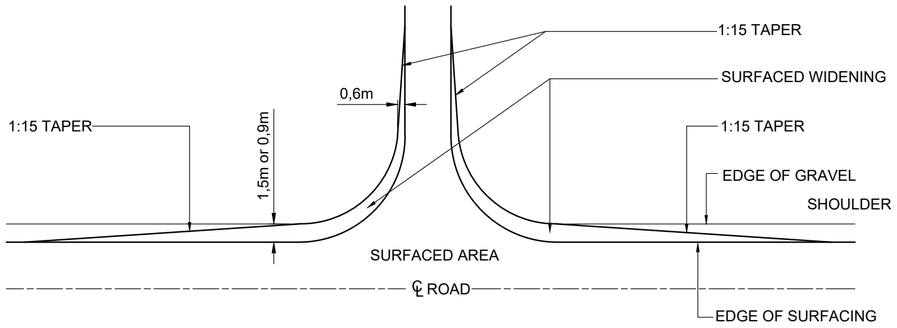

INTERSECTION OF SURFACED ROADS
WITH GRAVEL SHOULDERS

NOTES :

1. THE STANDARD GATE IS TO BE LOCATED AT END OF RAMP IN FILL AND AT THE BUILDING LINE IN CUT. THE WIDTH OF THE GATE TO SUIT FARM EQUIPMENT.
2. FOR ROADS WITH SURFACED SHOULDERS THE KERB LAYOUT MUST BE DESIGNED AND CONSTRUCTED SO THAT THE KERBS LINE UP WITH THE EDGE OF SURFACING.
3. FOR ROADS WITH GRAVEL SHOULDERS THE KERB LAYOUT MUST BE DESIGNED AND CONSTRUCTED SO THAT THE KERBS LINE UP WITH THE OUTSIDE EDGE OF USABLE SHOULDER WITH A SURFACED TAPER EXTENDING BEYOND THE KERB TO THE NORMAL CARRIAGEWAY SURFACED WIDTH.
4. WHERE TWO ROADS INTERSECT THE NUMERICAL DIFFERENCE OF THE GRADIENTS (ROLL OVER) SHOULD NOT EXCEED 10% WITH A MAXIMUM SUPERELEVATION OF 6% ON THE MAIN ROAD.
5. MAXIMUM APPROACH GRADIENT TO BE 4% UPGRADE AND 6% DOWNGRADE.
6. THE BELLMOUTH RADIUS OF 15m IS ONLY APPLICABLE WHERE SIGNIFICANT SU + T VEHICLES USE THE ACCESS.

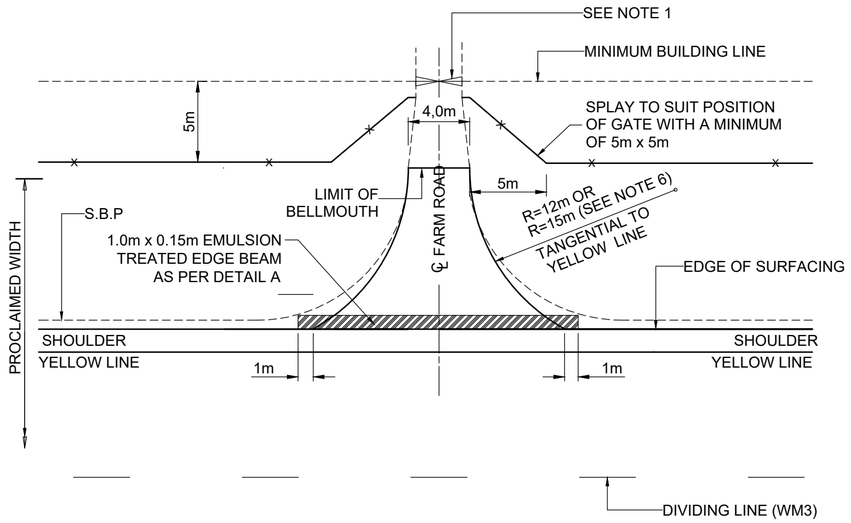

MINOR FARM/CAMP ACCESS

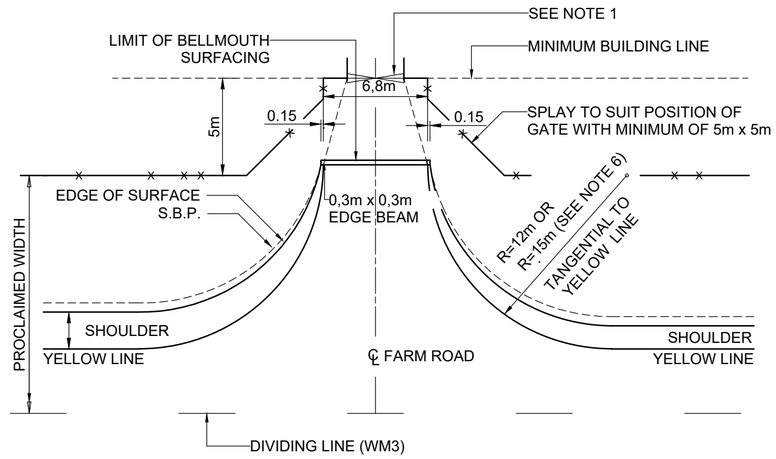

MAIN FARM ACCESS

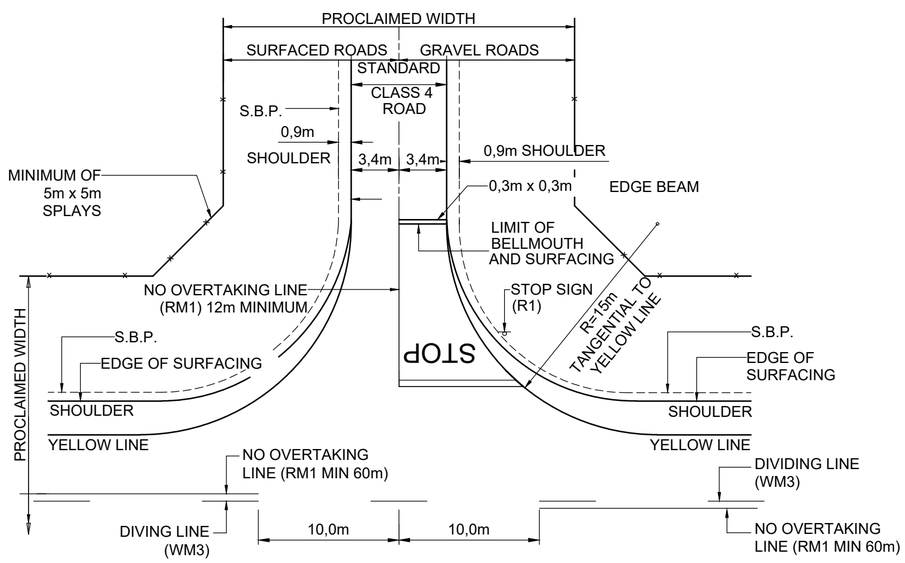

THROUGH ROAD INTERSECTION WITH CLASS 4 ROAD OR PRIVATE ACCESS (>50 VPD)

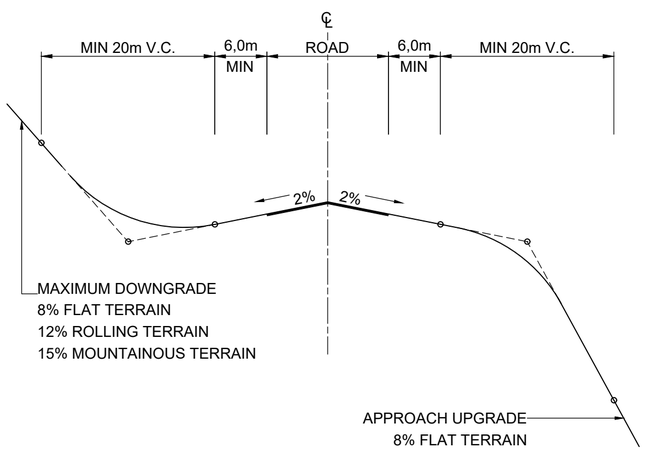

DESIRABLE GRADE REQUIREMENTS

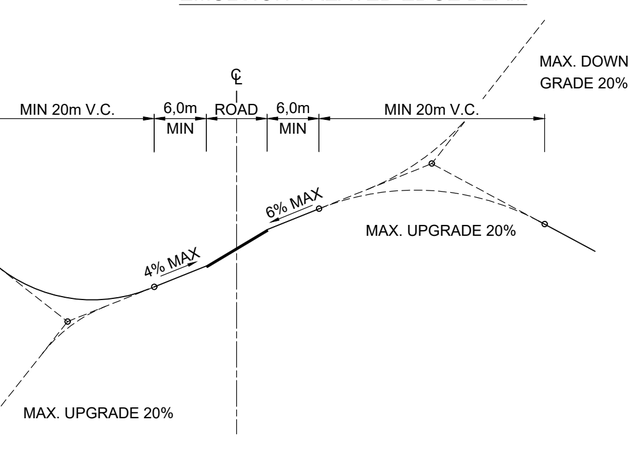

MAXIMUM ACCESS GRADES

STABILIZED 50% IN-SITU MATERIAL MIXED WITH 50% IMPORTED G4-QUALITY MATERIAL STABILIZED WITH 2.5% NET BITUMENT USING SS60 BITUMEN EMULSION AND 1% CEM II 32.5N BY MASS, COMPACTED TO 100% OF MDD FOR GRANULAR MATERIALS.

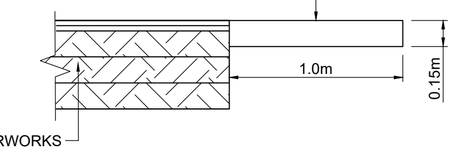

DETAIL A
EMULSION TREATED EDGE BEAM

No.	DATE	ADDITIONS AND AMENDMENTS
0	OCT - 2023	ORIGINAL VERSION

STANDARD PLANS

WESTERN CAPE GOVERNMENT
DEPARTMENT OF INFRASTRUCTURE
TRANSPORT INFRASTRUCTURE BRANCH

INTERSECTION

INTERSECTION AND FARM ACCESS DETAIL

SCALE : N.T.S.

A2 ORIGINAL

INDEX NO.
WCS/11/2/C1

PLAN NO.
SHEET 1 OF 1

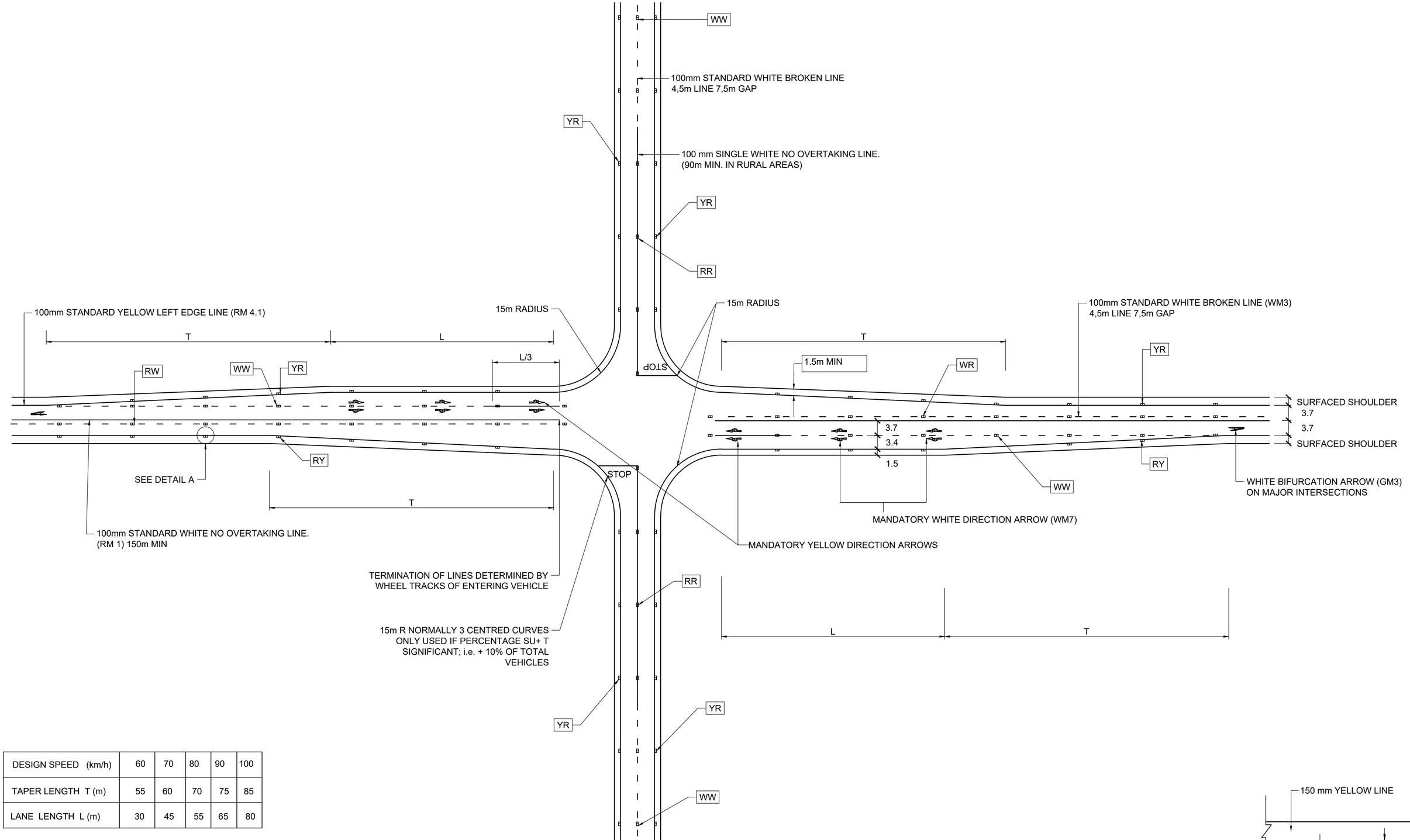

DESIGN SPEED (km/h)	60	70	80	90	100
TAPER LENGTH T (m)	55	60	70	75	85
LANE LENGTH L (m)	30	45	55	65	80

NOTE :
1. FOR ROAD MARKINGS
   REFER TO LATEST EDITION OF SADC-RTSM
2. SURFACED SHOULDERS - ON TAPERS MIN.
   1.5m WIDE

DETAIL A

No.	DATE	ADDITIONS AND AMENDMENTS
0	OCT - 2023	ORIGINAL VERSION

STANDARD PLANS

WESTERN CAPE GOVERNMENT
DEPARTMENT OF INFRASTRUCTURE
TRANSPORT INFRASTRUCTURE BRANCH

INTERSECTIONS

LAYOUT OF TYPICAL PASSING LANE AT 4-LEGGED INTERSECTIONS

SCALE : N.T.S.

A2 ORIGINAL

INDEX NO.
WCS/11/2/D1

PLAN NO.
SHEET 1 OF 4

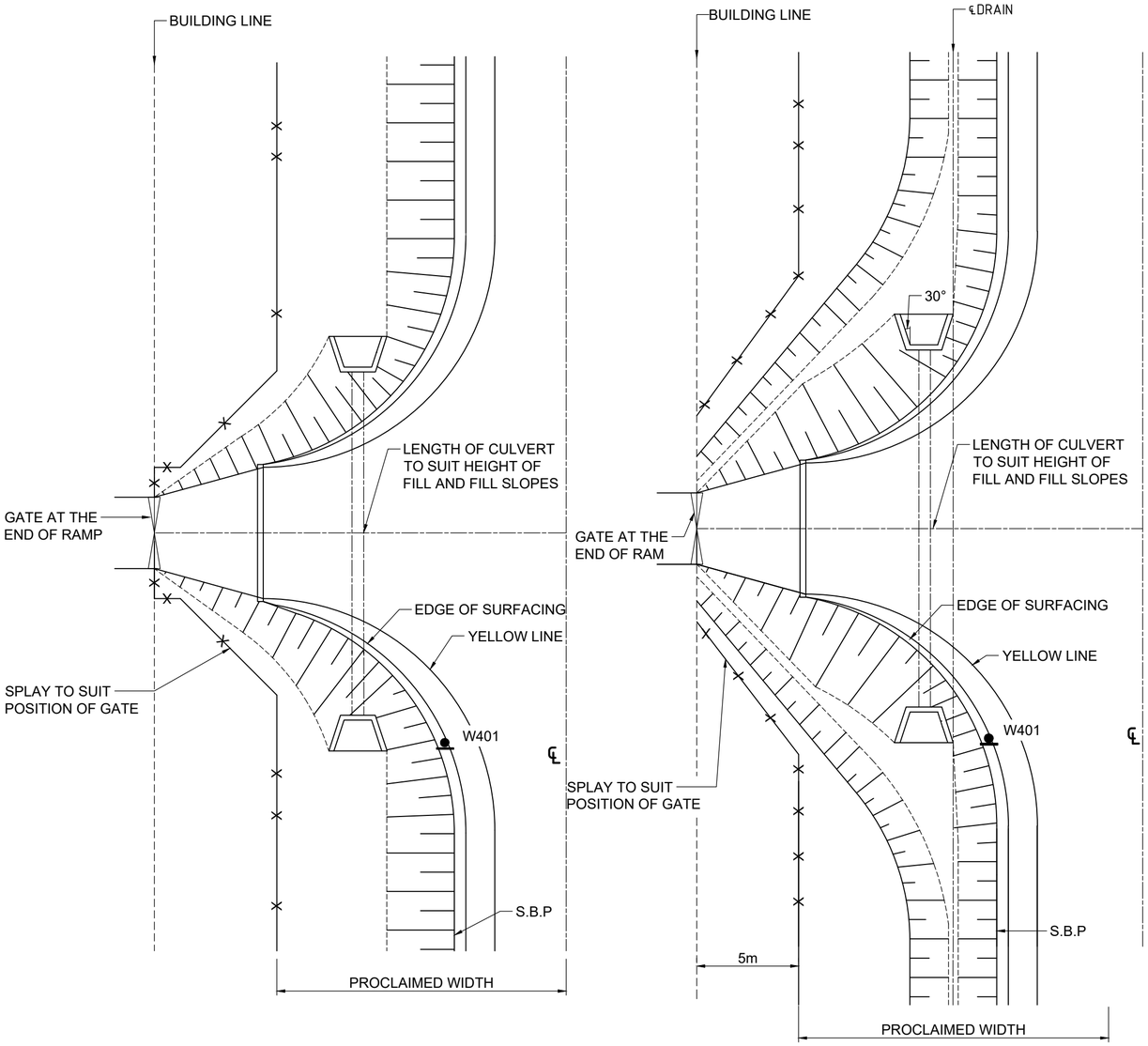

DRAINAGE IN FILL

DRAINAGE IN CUT

NOTES :

1. CULVERTS ARE TO BE PROVIDED WHERE NECESSARY TO MAINTAIN LONGITUDINAL DRAINAGE. MINIMUM 600 DIAMETER OR 900x450 PRECAST PORTAL CULVERT
2. THE ACCESS BELLMOUTH SHALL BE DESIGNED AND CONSTRUCTED SUCH THAT STORMWATER FROM THE ACCESS WILL NOT RUN ONTO OR ACROSS THE MAIN ROAD SURFACE.
3. WHERE TWO ROADS INTERSECT THE NUMERICAL DIFFERENCE OF THE GRADIENTS (ROLL OVER) SHOULD NOT EXCEED 10% WITH A MAXIMUM SUPERELEVATION OF 6% ON THE MAIN ROAD.
4. MAXIMUM APPROACH GRADIENT TO BE 4% UPGRADE AND 6% DOWNGRADE.
5. FOR BELLMOUTH RADII DETAIL REFER TO DRAWING WCS/11/2/C1
6. FOR DETAIL OF CULVERTS REFER TO DRAWING WCS/22/1/C1 OR WCS/22/2/C2
7. FOR DETAIL OF DANGER PLATE REFER TO DRAWING WCS/56/1/C6

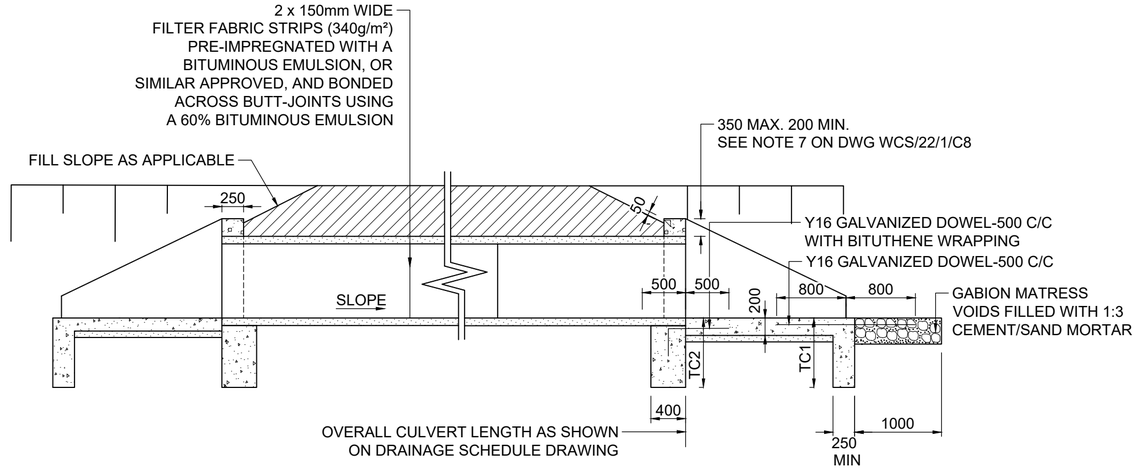

PIPE CULVERT

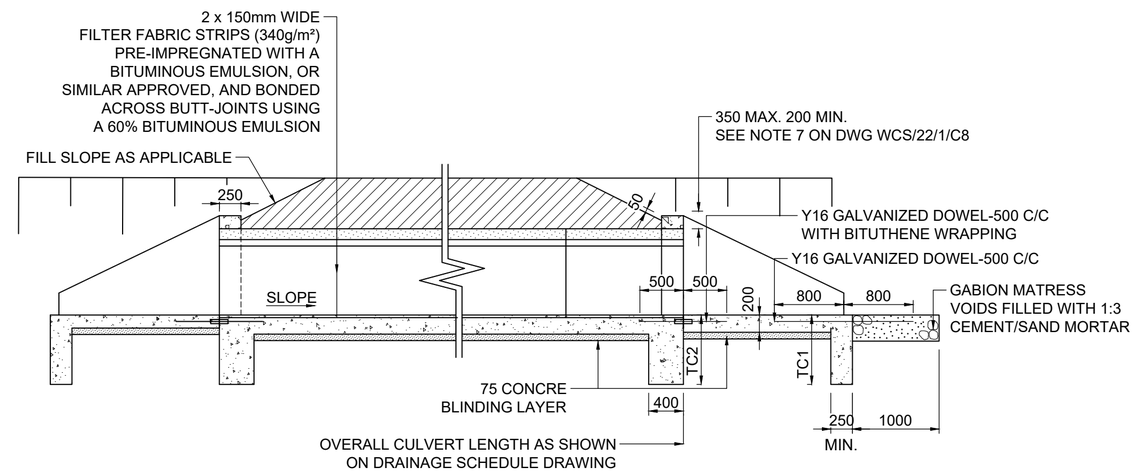

BOX CULVERT

No.	DATE	ADDITIONS AND AMENDMENTS
0	OCT - 2023	ORIGINAL VERSION

STANDARD PLANS

WESTERN CAPE GOVERNMENT
DEPARTMENT OF INFRASTRUCTURE
TRANSPORT INFRASTRUCTURE BRANCH

INTERSECTIONS

DRAINAGE AT INTERSECTIONS AND FARM ACCESSES

SCALE : N.T.S.

A2 ORIGINAL

INDEX NO.
WCS/11/2/D2

PLAN NO.
SHEET 2 OF 4

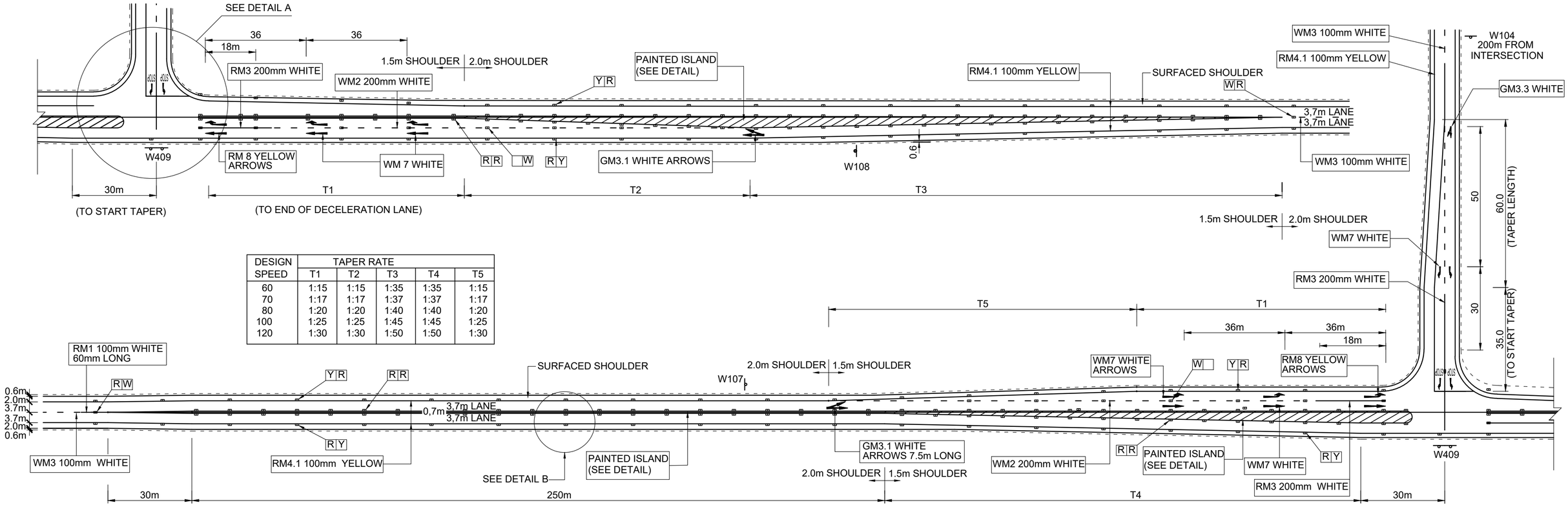

DESIGN SPEED	TAPER RATE				
	T1	T2	T3	T4	T5
60	1:15	1:15	1:35	1:35	1:15
70	1:17	1:17	1:37	1:37	1:17
80	1:20	1:20	1:40	1:40	1:20
100	1:25	1:25	1:45	1:45	1:25
120	1:30	1:30	1:50	1:50	1:30

NOTES :

1. ALL ROAD SIGNS AND ROAD MARKINGS TO BE IN ACCORDANCE WITH SADC-RTSM LATEST EDITION.
2. FINAL POSITION OF ALL ROAD SIGNS TO BE CONFIRMED BY THE ENGINEER ON SITE.
3. ROAD SIGNS TO BE PLACED AT LEAST 600mm FROM EDGE OF KERB OR 1,5m FROM SHOULDER.
4. REFER TO STANDARD DETAIL DRAWING WCS/56/1/C1-C9 FOR PERMANENT ROADSIGNS.
5. ROADSTUDS IN CARRIAGEWAY TO BE SPACED AT 24m CENTRES AND IN PAINTED ISLANDS AT 12m CENTRES.
6. STACKING LENGTHS TO BE CONFIRMED BY ENGINEER AFTER TRAFFIC ANALYSIS.
7. ROAD MARKING DIRECTION ARROWS
   - WM7 AND RM8= 5m LONG
   - GM3 = 7.5m LONG
8. IF TRAFFIC VOLUMES > 1000VPD CONSIDER THE 700mm PAINTED WIDTH. IF HEAVY VEHICLE TRAFFIC VOLUMES IS SIGNIFICANTLY HIGH CONSIDER 700mm PAINTED WIDTH.



ROAD SIGNS

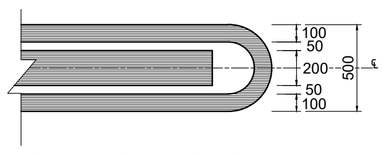

TYPICAL DETAIL OF REDUCED ISLAND WIDTH FOR PROVINCIAL MINOR AND DIVISIONAL ROADS (SEE NOTE 8)

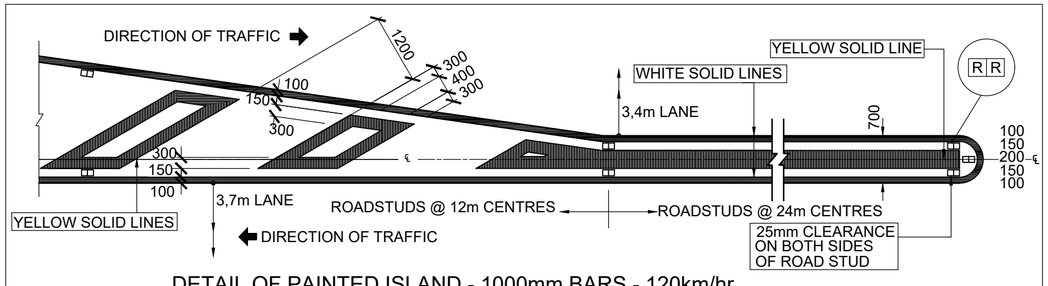

DETAIL OF PAINTED ISLAND - 1000mm BARS - 120km/hr

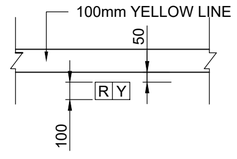

DETAIL B

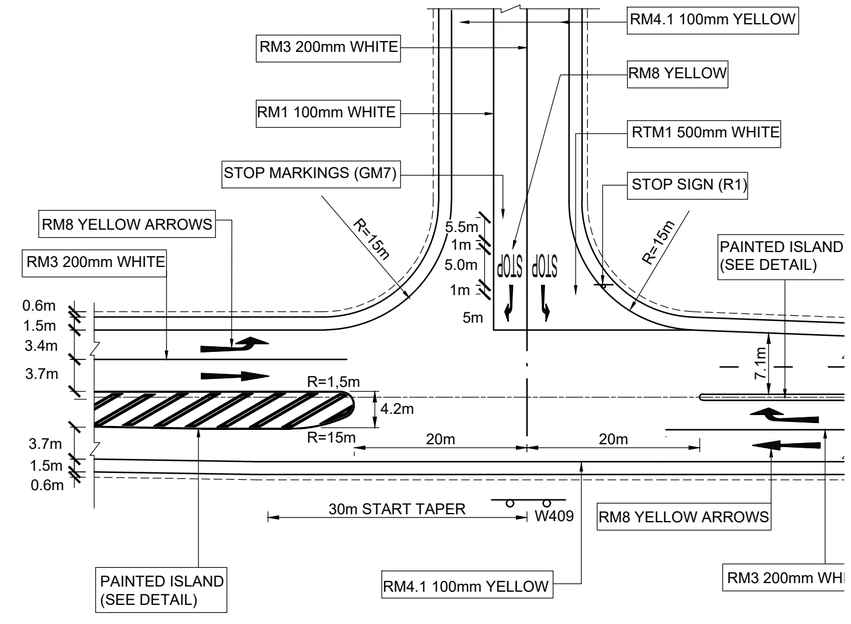

DETAIL A

FOR SU+T (23m RADIUS)

No.	DATE	ADDITIONS AND AMENDMENTS
0	OCT - 2023	ORIGINAL VERSION

STANDARD PLANS

WESTERN CAPE GOVERNMENT
DEPARTMENT OF INFRASTRUCTURE
TRANSPORT INFRASTRUCTURE BRANCH

INTERSECTIONS

T-JUNCTIONS - SINGLE CARRIAGEWAY

SCALE : N.T.S.

A2 ORIGINAL

INDEX NO. WCS/11/2/D3

PLAN NO. SHEET 3 OF 4

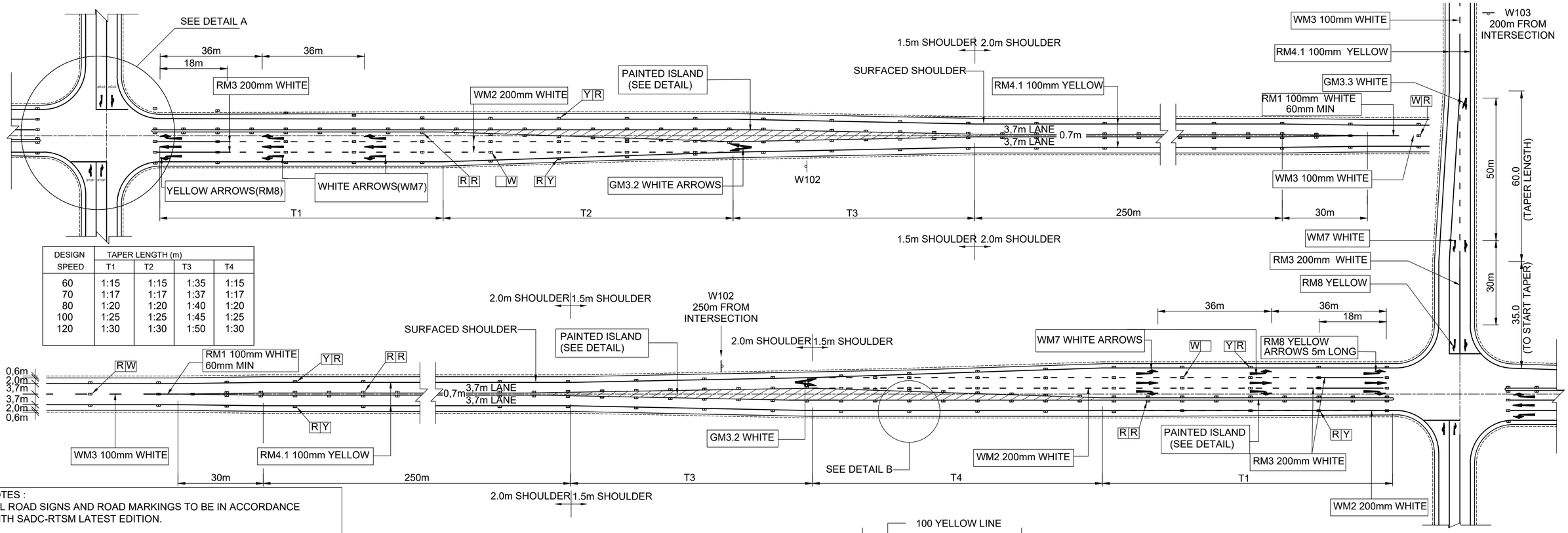

DESIGN SPEED	TAPER LENGTH (m)			
	T1	T2	T3	T4
60	1:15	1:15	1:35	1:15
70	1:17	1:17	1:37	1:17
80	1:20	1:20	1:40	1:20
100	1:25	1:25	1:45	1:25
120	1:30	1:30	1:50	1:30

NOTES :

1. ALL ROAD SIGNS AND ROAD MARKINGS TO BE IN ACCORDANCE WITH SADC-RTSM LATEST EDITION.
2. FINAL POSITION OF ALL ROAD SIGNS TO BE CONFIRMEND BY THE ENGINEER ON SITE.
3. ROAD SIGNS TO BE PLACED AT LEAST 600mm FROM EDGE OF KERB OR 1,5m FROM SHOULDER.
4. REFER TO STANDARD DETAIL DRAWING WCS/56/C1-C9 FOR PERMANENT ROADSIGNS.
5. ROADSTUDS IN CARRIAGEWAY TO BE SPACED AT 24m CENTRES AND IN PAINTED ISLANDS AT 12m CENTRES.
6. STACKING LENGTHS TO BE CONFIRMED BY ENGINEER AFTER TRAFFIC ANALYSIS.
7. ROAD MARKING DIRECTION ARROWS
   - WM7 AND RM8 = 5m LONG
   - GM3 = 7.5m LONG
8. IF TRAFFIC VOLUMES > 1000VPD CONSIDER THE 700mm PAINTED WIDTH. IF HEAVY VEHICLE TRAFFIC VOLUMES IS SIGNIFICANTLY HIGH CONSIDER 700mm PAINTED WIDTH.

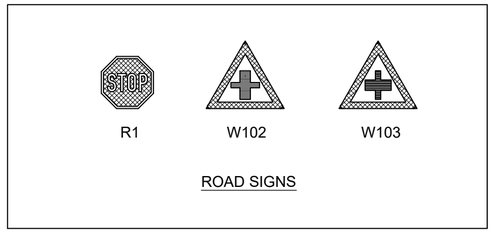

ROAD SIGNS

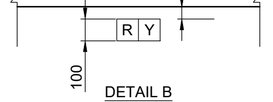

DETAIL B

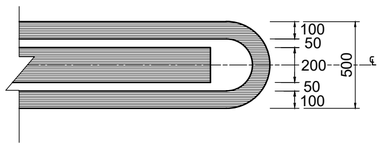

TYPICAL DETAIL OF REDUCED PAINTED ISLAND WIDTH FOR PROVINCIAL MINOR AND DIVISIONAL ROADS (SEE NOTE 8)

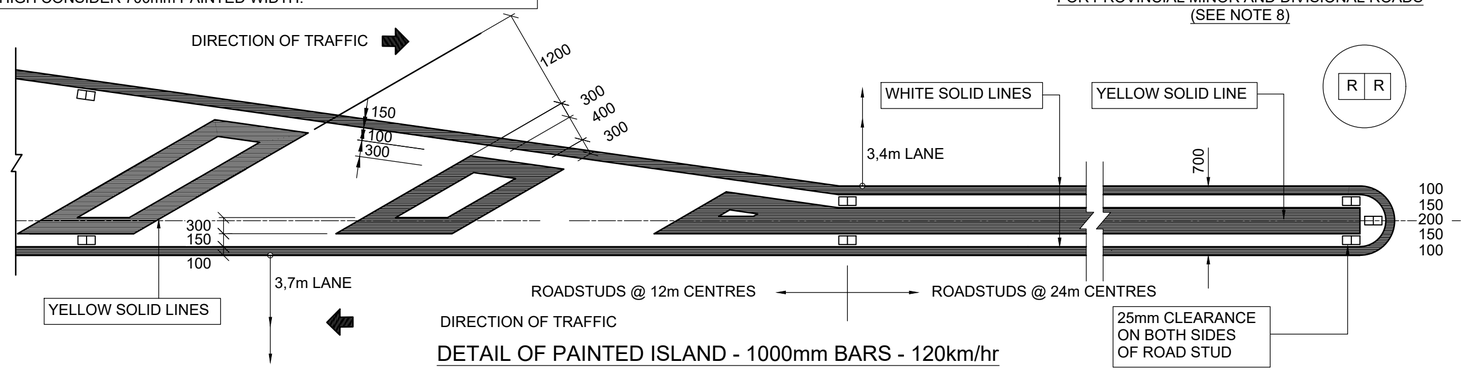

DETAIL OF PAINTED ISLAND - 1000mm BARS - 120km/hr

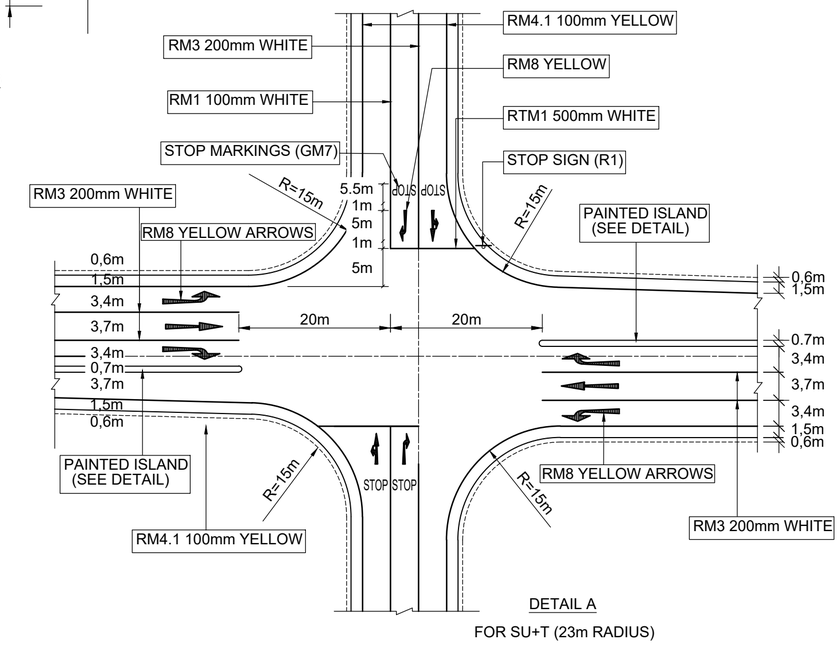

DETAIL A

FOR SU+T (23m RADIUS)

No.	DATE	ADDITIONS AND AMENDMENTS
0	OCT - 2023	ORIGINAL VERSION

STANDARD PLANS

WESTERN CAPE GOVERNMENT
DEPARTMENT OF INFRASTRUCTURE
TRANSPORT INFRASTRUCTURE BRANCH

INTERSECTIONS

4-WAY INTERSECTION - SINGLE CARRIAGEWAY

SCALE : N.T.S.

A2 ORIGINAL

INDEX NO. WCS/11/2/D4

PLAN NO. SHEET 4 OF 4

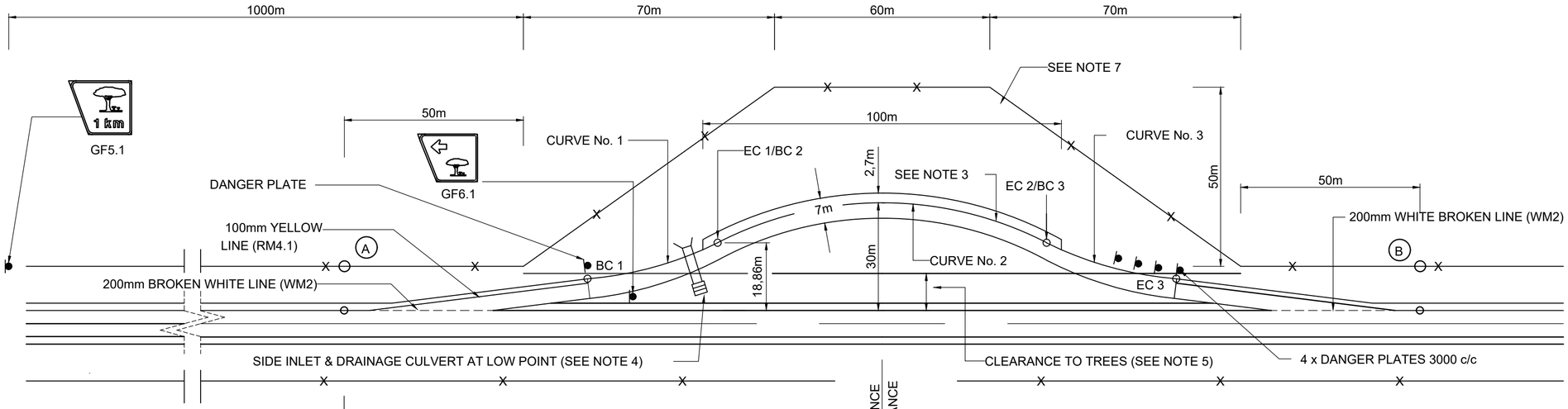

DETAIL OF REST AREA
SCALE 1:1000

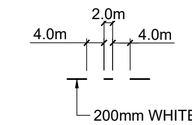

SPACING OF BROKEN LINE

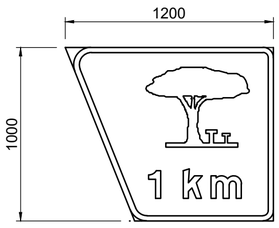

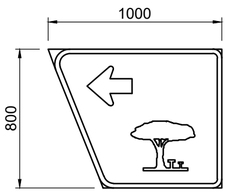

REST AREA SIGNS

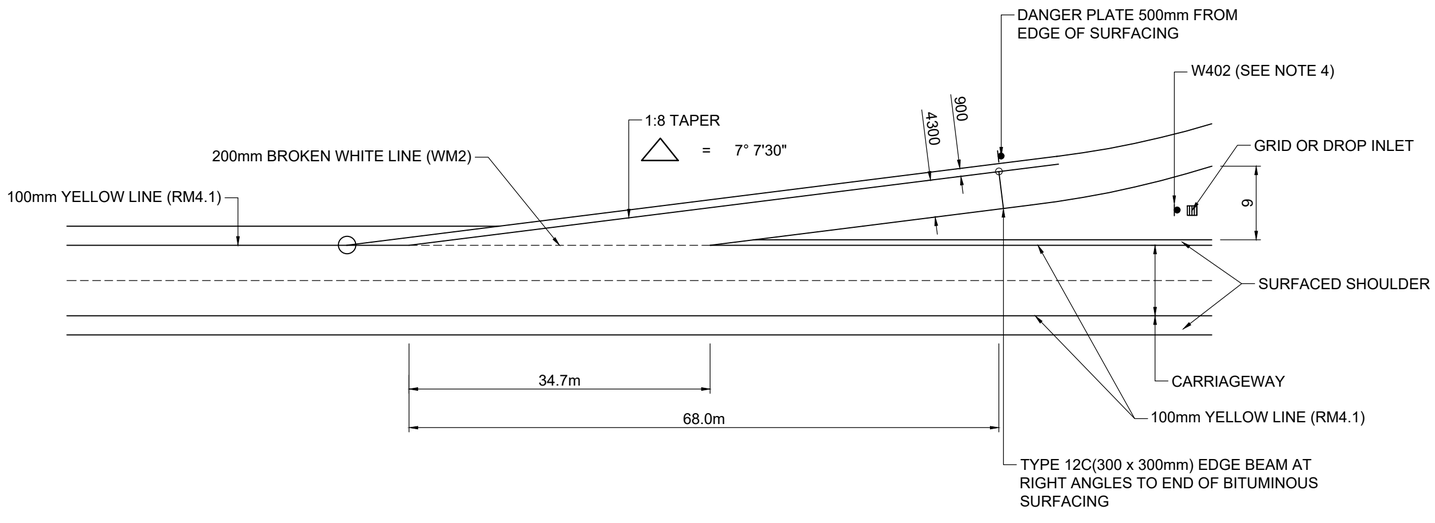

DETAIL OF ENTRANCE AND EXIT TAPERS
(SEE NOTE 2)
N.T.S

CURVE DATA		
CURVE No. 1	CURVE No. 2	CURVE No. 3
R = 100m △= 20°10'30"	R = 100m △ = 54°36'00"	R = 100m △= 20°10'30"
TL = 17,790m CL = 35,212m	TL = 51,613m CL = 95,295m	TL = 17,790m CL = 35,212m

NOTES :

1. THIS DRAWING SHOWS THE LAYOUT OF A TYPICAL REST AREA. THE ACTUAL LAYOUT WILL DEPEND ON LOCAL CONDITIONS.
2. THE TAPERED EXIT AND ENTRANCE ROADS MAY BE REPLACED BY A SINGLE BELLMOUTH IF NECESSARY.
3. SELECTED GRAVEL WEARING COURSE TO BE PROVIDED WITHIN REST AREA BETWEEN SURFACED TAPERS.
4. DANGER PLATES W401/W402 SHOULD ONLY BE USED WHERE DROP INLETS OR DRAINS PRESENT A DANGER.
5. CLEARANCE TO TREES : 10,0m MIN.
6. RESERVE BOUNDARY CAN BE ADAPTED TO SUIT PARTICULAR CIRCUMSTANCE eg. WHERE OLD RESERVE OR EXISTING REST AREAS CAN BE UTILIZED.
7. VERMIN PROOF FENCING TO BE PROVIDED BETWEEN POINTS A & B. REFER TO DWG. WCS/55/1/C1 FOR DETAILS.
8. REST AREA TO BE SHAPED TO ALLOW PROPER DRAINAGE.

No.	DATE	ADDITIONS AND AMENDMENTS
0	OCT - 2023	ORIGINAL VERSION

STANDARD PLANS

WESTERN CAPE GOVERNMENT
DEPARTMENT OF INFRASTRUCTURE
TRANSPORT INFRASTRUCTURE BRANCH

REST AREAS

LAYOUT PLAN OF REST AREA

SCALE : N.T.S.

A2 ORIGINAL

INDEX NO.
WCS/11/3/C1

PLAN NO.
SHEET 1 OF 3

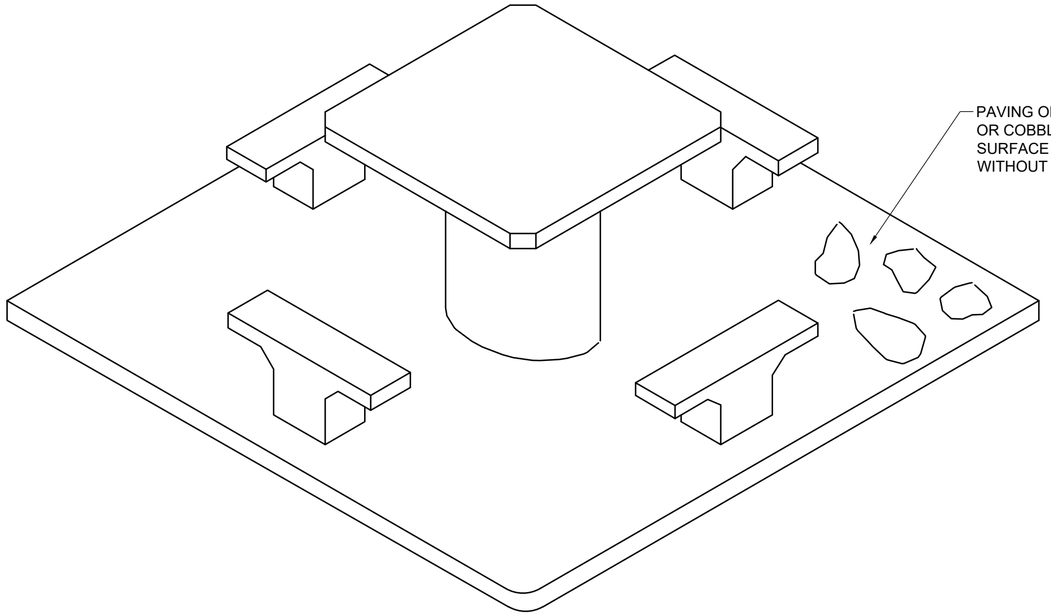

ISOMETRIC VIEW OF TABLES & BENCHES

SCALE 1:20

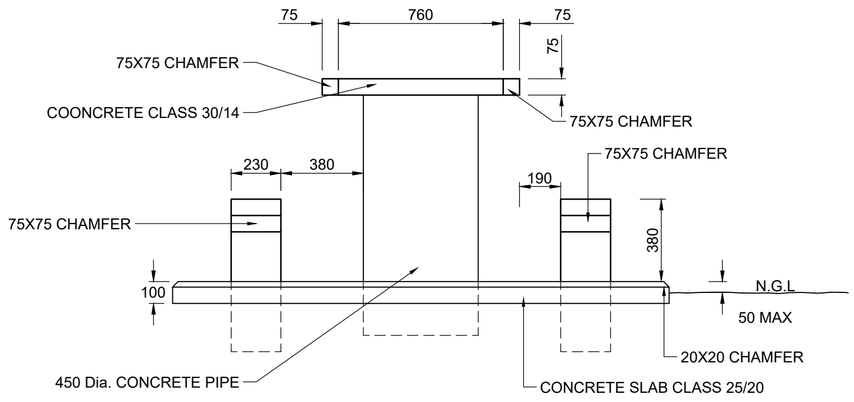

ELEVATION OF TABLE & BENCHES

SCALE 1:20

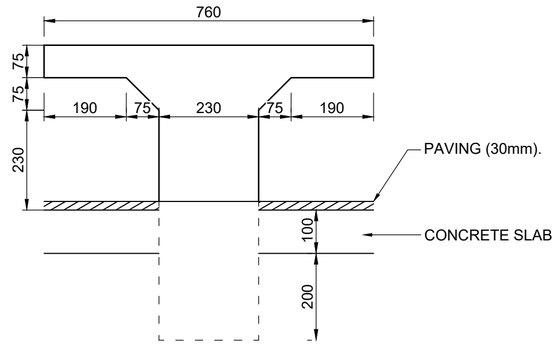

ELEVATION

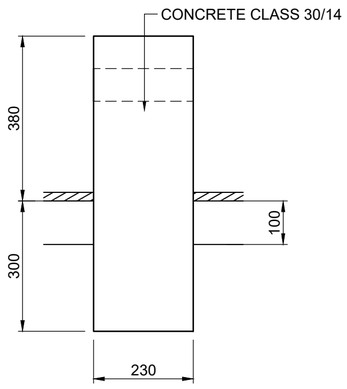

SECTION A-A

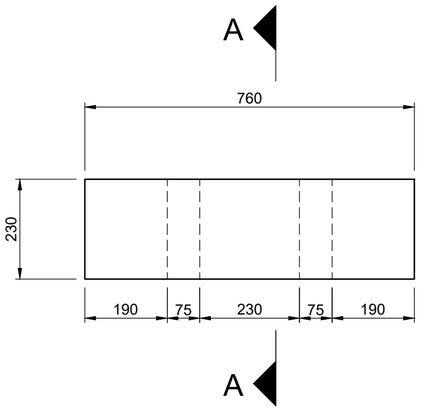

PLAN

DETAILS OF BENCHES

SCALE 1:10

NOTES

1. REFER TO DWG NO WCS/11/3/C3 FOR REINFORCING DETAILS.

No.	DATE	ADDITIONS AND AMENDMENTS
0	OCT - 2023	ORIGINAL VERSION

STANDARD PLANS

WESTERN CAPE GOVERNMENT
DEPARTMENT OF INFRASTRUCTURE
TRANSPORT INFRASTRUCTURE BRANCH

REST AREAS

DETAIL OF TABLE AND BENCHES AT REST AREAS

SCALE : N.T.S.

A2 ORIGINAL

INDEX NO.
WCS/11/3/C2

PLAN NO.
SHEET 2 OF 3

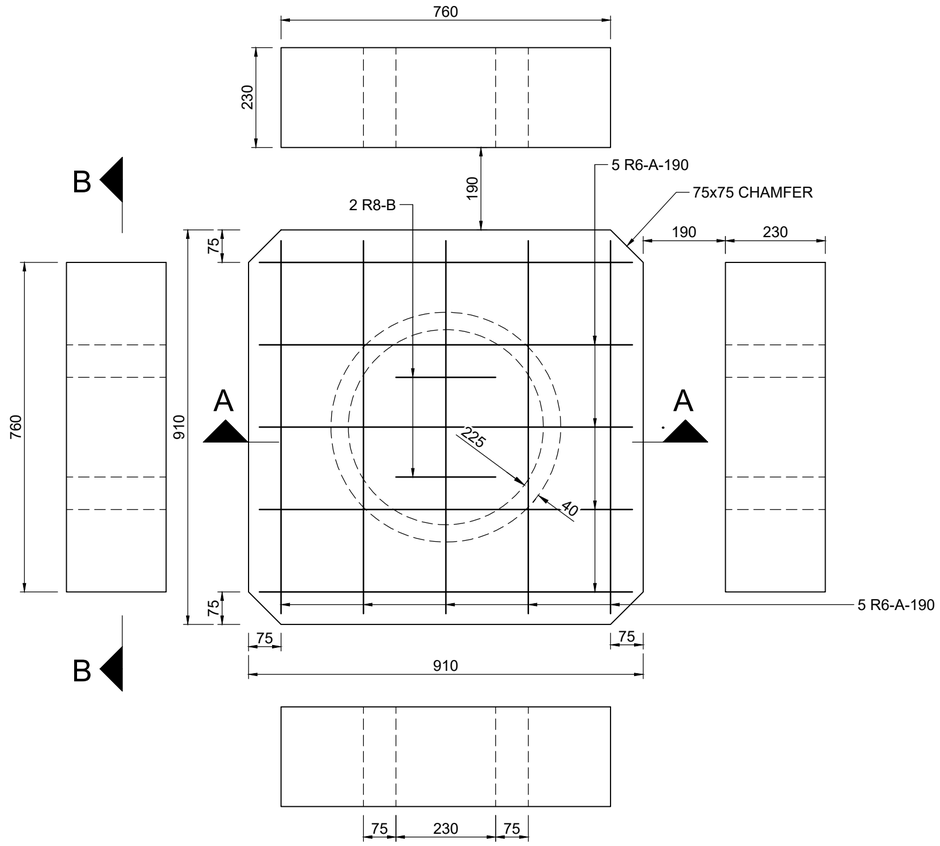

PLAN

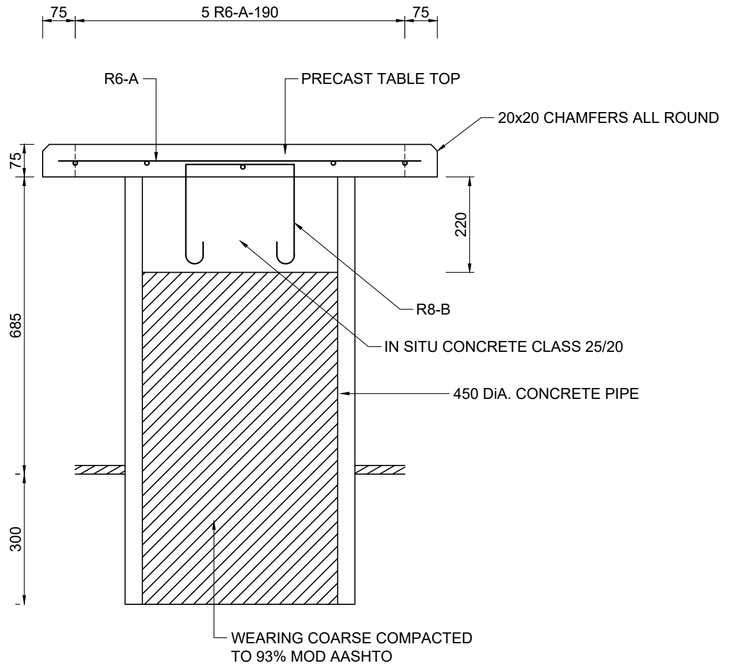

SECTION A-A

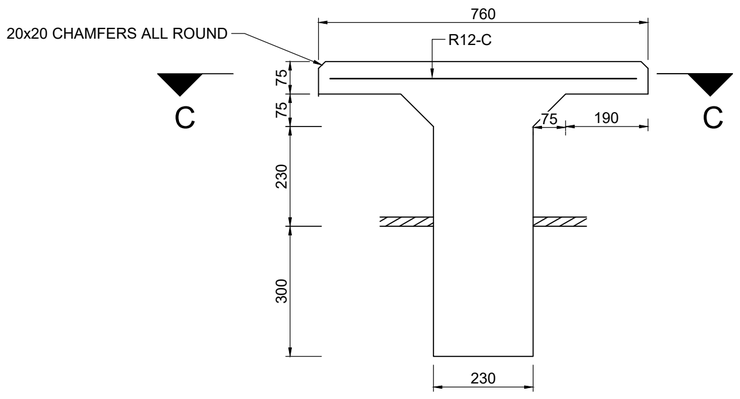

SECTION B-B

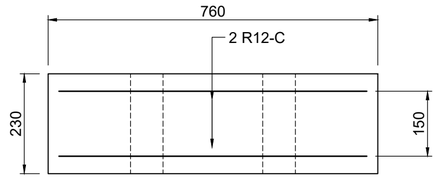

SECTION C-C

BENDING SCHEDULE						
UNITS	No/UNITS	MARK	TYPE/Dia	TOTAL No.	LENGTH	BENDING
TABLE	1	A	R6	10	850	
		B	R8	2	850	250 / 200
BENCHES	4	C	R12	8	700	
TOTAL WEIGHT - 7,6kg						

NOTES :

1. CONCRETE - CLASS 30/14 FOR PRECAST CONCRETE
   CLASS 25/20 FOR IN SITU CONCRETE
2. COVER - 30mm

No.	DATE	ADDITIONS AND AMENDMENTS
0	OCT - 2023	ORIGINAL VERSION

STANDARD PLANS

WESTERN CAPE GOVERNMENT
DEPARTMENT OF INFRASTRUCTURE
TRANSPORT INFRASTRUCTURE BRANCH

REST AREAS

REINFORCING DETAIL FOR TABLE AND BENCHES

SCALE : N.T.S.

A2 ORIGINAL

INDEX NO.
WCS/11/3/C3

PLAN NO.
SHEET 3 OF 3

DECISION MATRIX							
WCG RURAL ROAD CLASSES		1	2	3		4 (UNSURFACED)	
ROAD RESERVE WIDTH (m)		30	25	25	20	25	20
ADT VOLUME (e.v.u) (vi)		2000-1000	1000-400	400 - 200		< 200	
		RECOMMENDED BUS STOP TREATMENT TYPES					
TYPICAL DESIGN SPEED (km/h)	100	1(2)(i)	1(2)(i)	1/2	2	4 (ii)	
	80	1/2	1/2	3/4		4	
	<70	-	1/2	3/4(5) (iii)		4(5) (iii)	

THROUGH ROAD DESIGN SPEED kM/h	SIGHT DISTANCE REQUIRED (SD) (m)	SIGHT DISTANCE AVAILABLE (iV)
100	300	✗
80	240	✓
<70	210	✓

(iv) TRH17 - SINGLE UNIT (SU) DESIGN VEHICLE

STANDARD DIMENSIONS: TREATMENT TYPE PERI-URBAN					
WCG RURAL ROAD CLASSES	DIMENSION				
	a	b	c	d	e
1	3700	2000	30000	4775	6800
2	3400	1500	25000	2575	4600
3	3400	900	20000	INSUFFICIENT(v)	
			(25000)	(2575)	(4600)
4	N/A (UNSURFACED ROAD)				

(v) AVAILABLE VERGE WIDTH RESTRICTED. NOT SUITED FOR HIGH FILLS OR CUTS.

NOTES:

1. PAVEMENT DESIGN TO BE DEVELOPED.
2. STREET LIGHTING REQUIREMENT TO BE DEVELOPED.
3. ROADMARKINGS AND SIGNAGE REFER TO DRAWING WCS/11/4/D9.
4. THE TYPICAL DIMENSIONS PROVIDED FOLLOW THE STANDARD INTERSECTION LAYOUT AS SHOWN ON THE WCG'S STANDARD PLANS. FOR ANY DEVIATION PLEASE REFER THE CALCULATION DETAIL.
5. IF NO ADJACENT NON-MOTORISED TRANSPORT FACILITIES EXIST, THE 600mm TAPER APRON MAY BE WIDENED TO 900mm TO PROVIDE CONNECTION TO THE ROAD SHOULDER.

(i) ALTERNATE TYPE INDICATED IN (). ONLY TO BE USED IF VALID CONSTRAINTS EXIST.
(ii) HIGH SPEED ON GRAVEL ROAD: BUS STOP LOCATION TO BE EVALUATED.
(iii) TYPE 5 TREATMENT ONLY TO BE USED IF THE AVAILABLE VERGE IS SEVERELY RESTRICTED.
(vi) ADT VOLUME SHOWN ACCORDING TO WCG GEOMETRIC DESIGN MANUAL, BUT ARE OFTEN EXCEEDED IN PRACTICE. MUST NOT BE USED TO DICTATE BUS STOP TYPE. HOWEVER WHERE TRAFFIC VOLUME EXCEEDS INDICATED VOLUME SIGNIFICANTLY THE POSSIBILITY OF AN UPGRADE OF THE ROAD IN THE NEAR FUTURE MUST BE CONSIDERED IN THE DESIGN APPROACH.

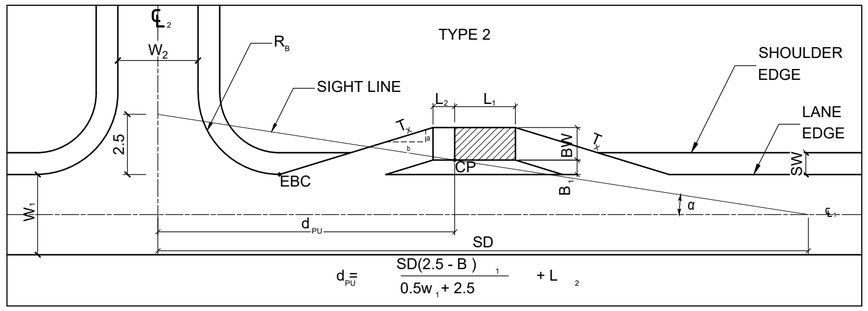

CALCULATION DETAIL

LEGEND			
α	SIGHT TRIANGLE ANGLE = ARCTAN (0.5w. + 2.5)/SD	CP	CRITICAL POINT I.T.O SIGHT TRIANGLE (RIGHT REAR CORNER OF BUS)
w_1	WIDTH OF THROUGH ROAD	L_1	VEHICLE LENGTH (15m/22m/26m)
w_2	WIDTH OF INTERSECTING ROAD	L_2	5m STRAIGHTENING LENGTH
R_B	BELLMOUTH RADIUS	BW	BUSBAY WIDTH (3m)
ℓ_1	CENTRELINE OF THROUGH ROAD	SW	SHOULDER WIDTH
ℓ_2	CENTRELINE OF INTERSECTING ROAD	EBC	END OF BELLMOUTH CURVE
SD	SIGHT DISTANCE REQUIRED	T_X	TAPER (a:b)
B_1	REDUCED BUFFER (1.5m MINIMUM)		

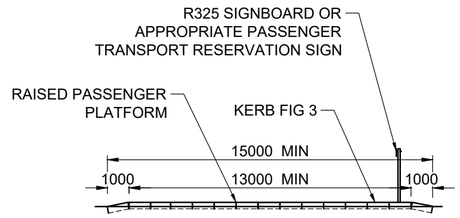

ELEVATION B-B

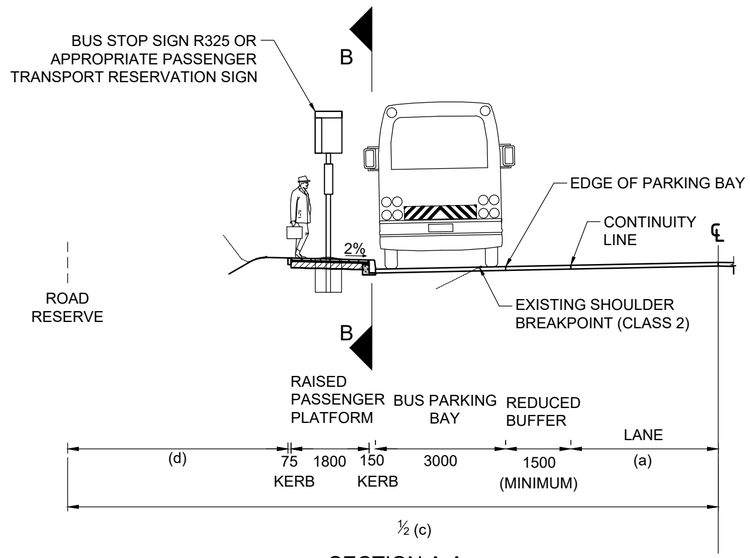

SECTION A-A

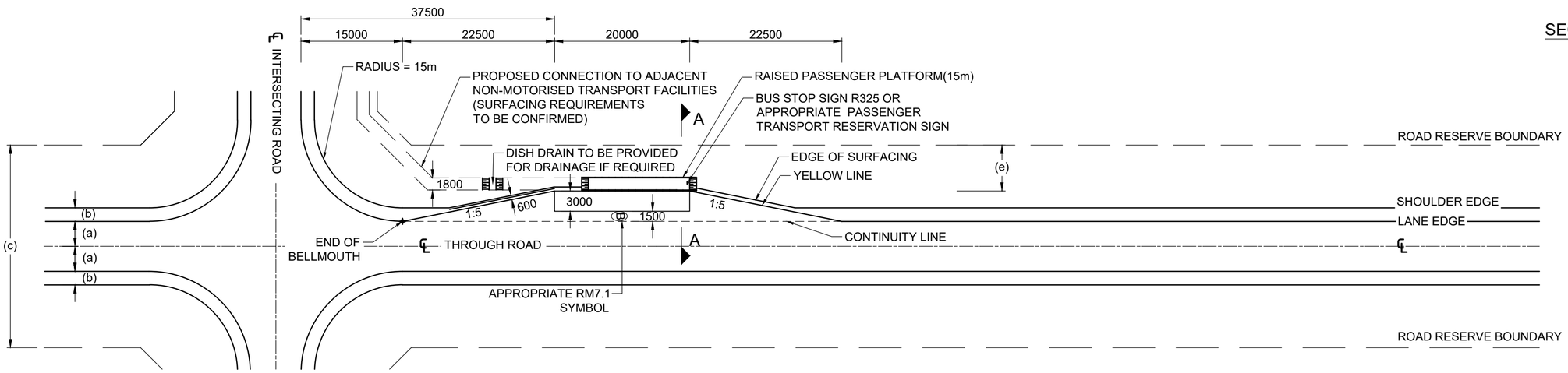

PLAN

No.	DATE	ADDITIONS AND AMENDMENTS
0	OCT - 2023	ORIGINAL VERSION

STANDARD PLANS

WESTERN CAPE GOVERNMENT
DEPARTMENT OF INFRASTRUCTURE
TRANSPORT INFRASTRUCTURE BRANCH

RURAL BUS STOPS

BUS STOP TREATMENT TYPE : PERI-URBAN SURFACED SHOULDER AND BUS STOP WITH 1.5m REDUCED BUFFER (MINIMUM)

SCALE : N.T.S.

A2 ORIGINAL

INDEX NO. WCS/11/4/D1

PLAN NO. SHEET 1 OF 10

DECISION MATRIX							
WCG RURAL ROAD CLASSES		1	2	3		4 (UNSURFACED)	
ROAD RESERVE WIDTH (m)		30	25	25	20	25	20
ADT VOLUME (e.v.u) (vi)		2000-1000	1000-400	400 - 200		< 200	
		RECOMMENDED BUS STOP TREATMENT TYPES					
TYPICAL DESIGN SPEED (km/h)	100	1(2)(i)	1(2)(i)	1/2	2	4(ii)	
	80	1/2	1/2	3/4		4	
	<70	-	1/2	3/4(5) (iii)		4(5) (iii)	

THROUGH ROAD DESIGN SPEED kM/h	SIGHT DISTANCE REQUIRED (SD) (m)	SIGHT DISTANCE AVAILABLE (iV)
100	300	✗
80	240	✓
<70	210	✓

(iv) TRH17 - SINGLE UNIT (SU) DESIGN VEHICLE

STANDARD DIMENSIONS: TREATMENT TYPE 1					
WCG RURAL ROAD CLASSES	DIMENSION				
	a	b	c	d	e
1	3700	2000	30000	3775	5800
2	3400	1500	25000	1575	3600
3	3400	900	20000 (25000)	INSUFFICIENT (1575)	(3600)
4	N/A (UNSURFACED ROAD)				

NOTE: THESE DIMENSIONS WILL VARY PER SITE AND ARE PROVIDED AS AN INDICATION. BASED ON THE WCG GEOMETRIC DESIGN MANUAL'S STANDARD ROAD CLASSES.

NOTES:

1. PAVEMENT DESIGN TO BE DEVELOPED.
2. STREET LIGHTING REQUIREMENT TO BE DEVELOPED.
3. ROADMARKINGS AND SIGNAGE REFER TO DRAWING WCS/11/4/D9.
4. THE TYPICAL DIMENSIONS PROVIDED FOLLOW THE STANDARD INTERSECTION LAYOUT AS SHOWN ON THE WCG'S STANDARD PLANS. FOR ANY DEVIATION PLEASE REFER THE CALCULATION DETAIL.
5. IF NO ADJACENT NON-MOTORISED TRANSPORT FACILITIES EXIST, THE 600mm TAPER APRON MAY BE WIDENED TO 900mm TO PROVIDE CONNECTION TO THE ROAD SHOULDER.

(i) ALTERNATE TYPE INDICATED IN (). ONLY TO BE USED IF VALID CONSTRAINTS EXIST.
(ii) HIGH SPEED ON GRAVEL ROAD: BUS STOP LOCATION TO BE EVALUATED.
(iii) TYPE 5 TREATMENT ONLY TO BE USED IF THE AVAILABLE VERGE IS SEVERELY RESTRICTED.
(vi) ADT VOLUME SHOWN ACCORDING TO WCG GEOMETRIC DESIGN MANUAL, BUT ARE OFTEN EXCEEDED IN PRACTICE. MUST NOT BE USED TO DICTATE BUS STOP TYPE. HOWEVER WHERE TRAFFIC VOLUME EXCEEDS INDICATED VOLUME SIGNIFICANTLY THE POSSIBILITY OF AN UPGRADE OF THE ROAD IN THE NEAR FUTURE MUST BE CONSIDERED IN THE DESIGN APPROACH.

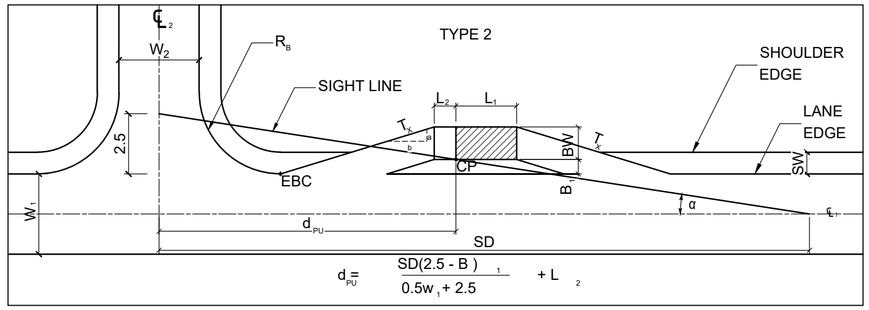

CALCULATION DETAIL

LEGEND			
α	SIGHT TRIANGLE ANGLE = ARCTAN (0.5w1 + 2.5)/SD	CP	CRITICAL POINT I.T.O SIGHT TRIANGLE (RIGHT REAR CORNER OF BUS)
w_1	WIDTH OF THROUGH ROAD	L_1	VEHICLE LENGTH (15m/22m/26m)
w_2	WIDTH OF INTERSECTING ROAD	L_2	5m STRAIGHTENING LENGTH
R_B	BELLMOUTH RADIUS	BW	BUSBAY WIDTH (3m)
℄ 1	CENTRELINE OF THROUGH ROAD	SW	SHOULDER WIDTH
℄ 2	CENTRELINE OF INTERSECTING ROAD	EBC	END OF BELLMOUTH CURVE
SD	SIGHT DISTANCE REQUIRED	T_x	TAPER (a:b)
B1	REDUCED BUFFER (2.5m MINIMUM)		

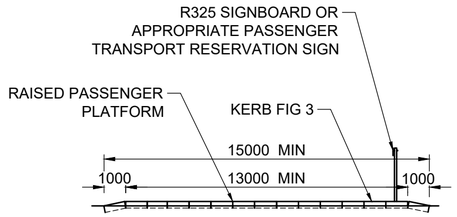

ELEVATION B-B

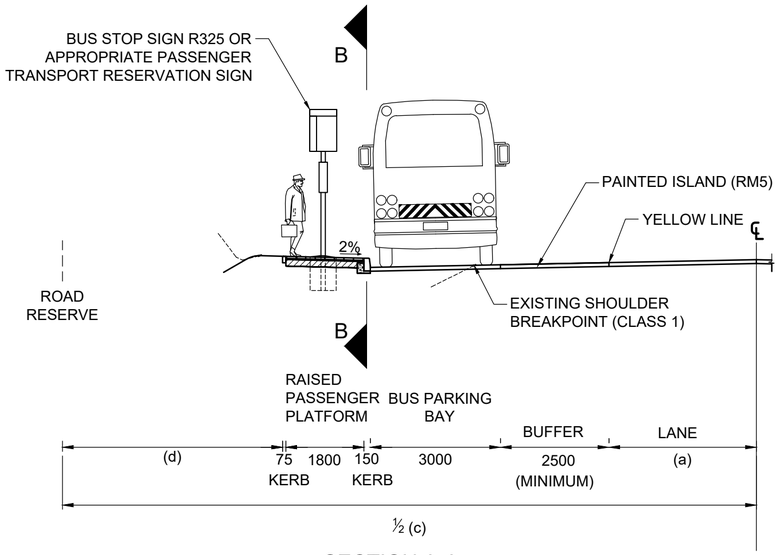

SECTION A-A

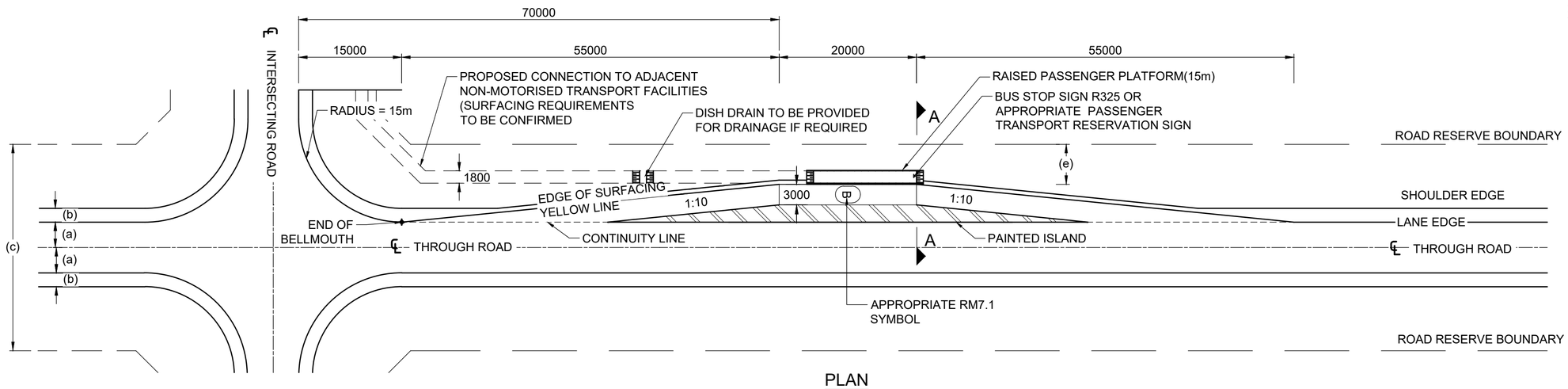

PLAN

No.	DATE	ADDITIONS AND AMENDMENTS
0	OCT - 2023	ORIGINAL VERSION

STANDARD PLANS

WESTERN CAPE GOVERNMENT
DEPARTMENT OF INFRASTRUCTURE
TRANSPORT INFRASTRUCTURE BRANCH

RURAL BUS STOPS

BUS STOP TREATMENT TYPE : PERI-URBANSURFACED SHOULDER AND BUS STOP WITH 2.5m REDUCED BUFFER (MINIMUM)

SCALE : N.T.S.

A2 ORIGINAL

INDEX NO. WCS/11/4/D2

PLAN NO. SHEET 2 OF 10

DECISION MATRIX							
WCG RURAL ROAD CLASSES		1	2	3		4 (UNSURFACED)	
ROAD RESERVE WIDTH (m)		30	25	25	20	25	20
ADT VOLUME (e.v.u) (vi)		2000-1000	1000-400	400 - 200		< 200	
		RECOMMENDED BUS STOP TREATMENT TYPES					
TYPICAL DESIGN SPEED (km/h)	100	1(2)(i)	1(2)(i)	1/2	2	4(ii)	
	80	1/2	1/2	3/4		4	
	<70	-	1/2	3/4(5)(iii)		4(5)(iii)	

THROUGH ROAD DESIGN SPEED kM/h	SIGHT DISTANCE REQUIRED (SD) (m)	SIGHT DISTANCE AVAILABLE (iV)
100	300	✓
80	240	✓
<70	210	✓

(iv) TRH17 - SINGLE UNIT (SU) DESIGN VEHICLE

STANDARD DIMENSIONS: TREATMENT TYPE 1A					
WCG RURAL ROAD CLASSES	DIMENSION				
	a	b	c	d	e
1	3700	2000	30000	1675	3700
2	3400	1500	25000	INSUFFICIENT	
3	3400	900	20000 (25000)	INSUFFICIENT	
4	N/A (UNSURFACED ROAD)				

NOTE: THESE DIMENSIONS WILL VARY PER SITE AND ARE PROVIDED AS AN INDICATION. BASED ON THE WCG GEOMETRIC DESIGN MANUAL'S STANDARD ROAD CLASSES.

NOTES:

1. PAVEMENT DESIGN TO BE DEVELOPED.
2. STREET LIGHTING REQUIREMENT TO BE DEVELOPED.
3. ROADMARKINGS AND SIGNAGE REFER TO DRAWING WCS/11/4/D9.
4. THE TYPICAL DIMENSIONS PROVIDED FOLLOW THE STANDARD INTERSECTION LAYOUT AS SHOWN ON THE WCG'S STANDARD PLANS. FOR ANY DEVIATION PLEASE REFER THE CALCULATION DETAIL.
5. IF NO ADJACENT NON-MOTORISED TRANSPORT FACILITIES EXIST, THE 600mm TAPER APRON MAY BE WIDENED TO 900mm TO PROVIDE CONNECTION TO THE ROAD SHOULDER.

(i) ALTERNATE TYPE INDICATED IN (). ONLY TO BE USED IF VALID CONSTRAINTS EXIST.
(ii) HIGH SPEED ON GRAVEL ROAD: BUS STOP LOCATION TO BE EVALUATED.
(iii) TYPE 5 TREATMENT ONLY TO BE USED IF THE AVAILABLE VERGE IS SEVERELY RESTRICTED.
(vi) ADT VOLUME SHOWN ACCORDING TO WCG GEOMETRIC DESIGN MANUAL, BUT ARE OFTEN EXCEEDED IN PRACTICE. MUST NOT BE USED TO DICTATE BUS STOP TYPE. HOWEVER WHERE TRAFFIC VOLUME EXCEEDS INDICATED VOLUME SIGNIFICANTLY THE POSSIBILITY OF AN UPGRADE OF THE ROAD IN THE NEAR FUTURE MUST BE CONSIDERED IN THE DESIGN APPROACH.

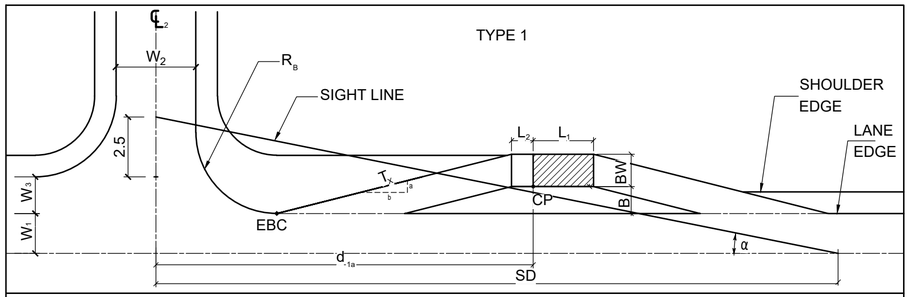

$$d_{1a} = 0.5w_2 + R_B + L_2 + \frac{b(BW + B)}{a}$$

CALCULATION DETAIL

LEGEND			
α	SIGHT TRIANGLE ANGLE = ARCTAN ($w_1 + w_3 + 2.5$)/SD	CP	CRITICAL POINT I.T.O SIGHT TRIANGLE (RIGHT REAR CORNER OF BUS)
w_1	WIDTH OF THROUGH LANE	B	BUFFER ⩾ SW (2.5m MINIMUM)
w_2	WIDTH OF INTERSECTING ROAD	L_1	VEHICLE LENGTH (15m/22m/26m)
w_3	WIDTH OF TURNING LANE	L_2	5m STRAIGHTENING LENGTH
R_B	BELLMOUTH RADIUS	BW	BUSBAY WIDTH (3m)
$\mathcal{L}_1$	CENTRELINE OF THROUGH ROAD	SW	SHOULDER WIDTH
$\mathcal{L}_2$	CENTRELINE OF INTERSECTING ROAD	EBC	END OF BELLMOUTH CURVE
SD	SIGHT DISTANCE REQUIRED	T_X	TAPER (a:b)

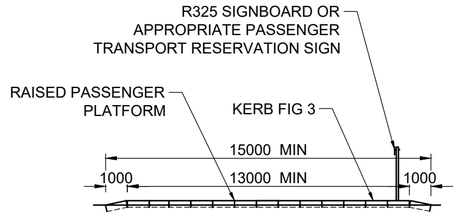

ELEVATION B-B

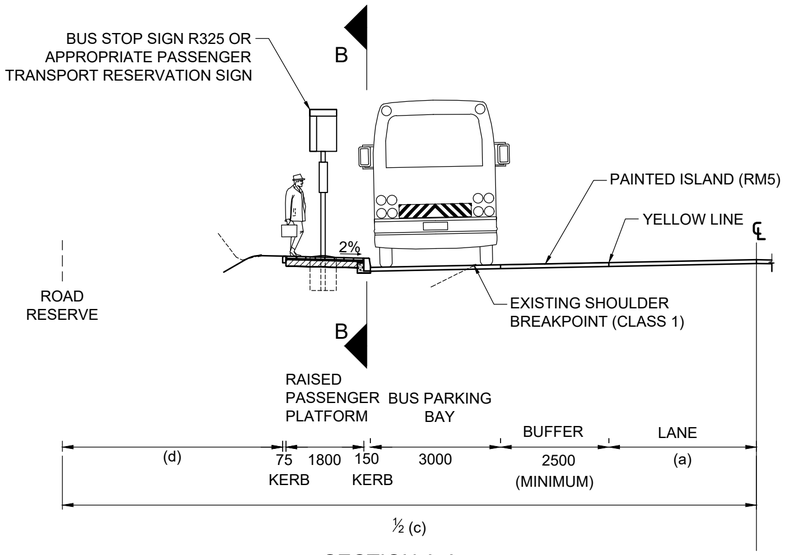

SECTION A-A

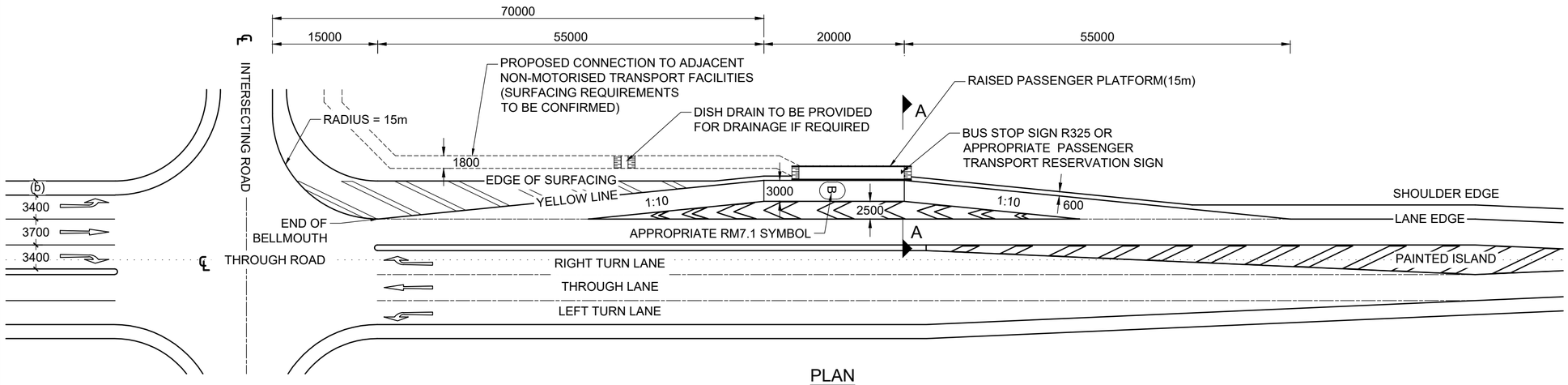

PLAN

No.	DATE	ADDITIONS AND AMENDMENTS
0	OCT - 2023	ORIGINAL VERSION

STANDARD PLANS

WESTERN CAPE GOVERNMENT
DEPARTMENT OF INFRASTRUCTURE
TRANSPORT INFRASTRUCTURE BRANCH

RURAL BUS STOPS

BUS STOP TREATMENT TYPE 1A ALTERNATIVE FOR TYPE 1 STOP ON HIGHER ORDER INTERSECTIONS

SCALE : N.T.S.

A2 ORIGINAL

INDEX NO. WCS/11/4/D3

PLAN NO. SHEET 3 OF 10

DECISION MATRIX							
WCG RURAL ROAD CLASSES		1	2	3		4 (UNSURFACED)	
ROAD RESERVE WIDTH (m)		30	25	25	20	25	20
ADT VOLUME (e.v.u) (vi)		2000-1000	1000-400	400 - 200		< 200	
		RECOMMENDED BUS STOP TREATMENT TYPES					
TYPICAL DESIGN SPEED (km/h)	100	1(2)(i)	1(2)(i)	1/2	2	4(ii)	
	80	1/2	1/2	3/4		4	
	<70	-	1/2	3/4(5)(iii)		4(5)(iii)	

THROUGH ROAD DESIGN SPEED kM/h	SIGHT DISTANCE REQUIRED (SD) (m)	SIGHT DISTANCE AVAILABLE (iV)
100	300	✓
80	240	✓
<70	210	✓

(iv) TRH17 - SINGLE UNIT (SU) DESIGN VEHICLE

STANDARD DIMENSIONS: TREATMENT TYPE 2					
WCG RURAL ROAD CLASSES	DIMENSION				
	a	b	c	d	e
1	3700	2000	30000	5075	7100
2	3400	1500	25000	2875	4900
3	3400	900	20000	375 (v)	2400
			(25000)	(2875)	(4900)
4	N/A (UNSURFACED ROAD)				

(v) AVAILABLE VERGE WIDTH RESTRICTED. NOT SUITED FOR HIGH FILLS OR CUTS.

NOTES:

1. PAVEMENT DESIGN TO BE DEVELOPED.
2. STREET LIGHTING REQUIREMENT TO BE DEVELOPED.
3. ROADMARKINGS AND SIGNAGE REFER TO DRAWING WCS/11/4/D9.
4. THE TYPICAL DIMENSIONS PROVIDED FOLLOW THE STANDARD INTERSECTION LAYOUT AS SHOWN ON THE WCG'S STANDARD PLANS. FOR ANY DEVIATION PLEASE REFER THE CALCULATION DETAIL.
5. IF NO ADJACENT NON-MOTORISED TRANSPORT FACILITIES EXIST, THE 600mm TAPER APRON MAY BE WIDENED TO 900mm TO PROVIDE CONNECTION TO THE ROAD SHOULDER.

(i) ALTERNATE TYPE INDICATED IN (). ONLY TO BE USED IF VALID CONSTRAINTS EXIST.
(ii) HIGH SPEED ON GRAVEL ROAD: BUS STOP LOCATION TO BE EVALUATED.
(iii) TYPE 5 TREATMENT ONLY TO BE USED IF THE AVAILABLE VERGE IS SEVERELY RESTRICTED.
(vi) ADT VOLUME SHOWN ACCORDING TO WCG GEOMETRIC DESIGN MANUAL, BUT ARE OFTEN EXCEEDED IN PRACTICE. MUST NOT BE USED TO DICTATE BUS STOP TYPE. HOWEVER WHERE TRAFFIC VOLUME EXCEEDS INDICATED VOLUME SIGNIFICANTLY THE POSSIBILITY OF AN UPGRADE OF THE ROAD IN THE NEAR FUTURE MUST BE CONSIDERED IN THE DESIGN APPROACH.

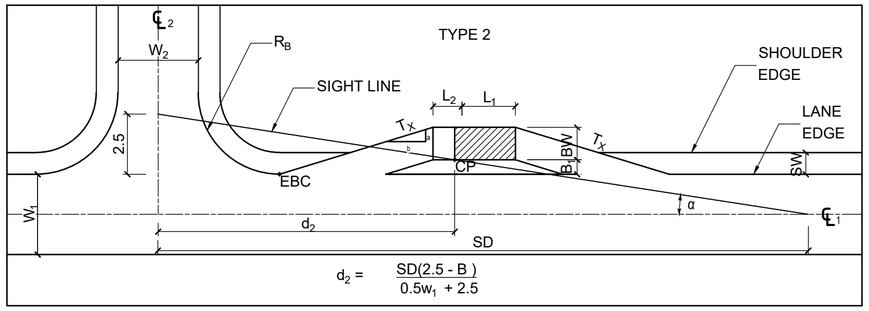

CALCULATION DETAIL

LEGEND			
α	SIGHT TRIANGLE ANGLE = ARCTAN (0.5w. + 2.5)/SD	CP	CRITICAL POINT I.T.O SIGHT TRIANGLE (RIGHT REAR CORNER OF BUS)
w_1	WIDTH OF THROUGH ROAD	L_1	VEHICLE LENGTH (15m/22m/26m)
w_2	WIDTH OF INTERSECTING ROAD	L_2	5m STRAIGHTENING LENGTH
R_B	BELLMOUTH RADIUS	BW	BUSBAY WIDTH (3m)
$\mathbb{C}_1$	CENTRELINE OF THROUGH ROAD	SW	SHOULDER WIDTH
$\mathbb{C}_2$	CENTRELINE OF INTERSECTING ROAD	EBC	END OF BELLMOUTH CURVE
SD	SIGHT DISTANCE REQUIRED	T_X	TAPER (a:b)
B_1	REDUCED BUFFER (1.2m MINIMUM)		

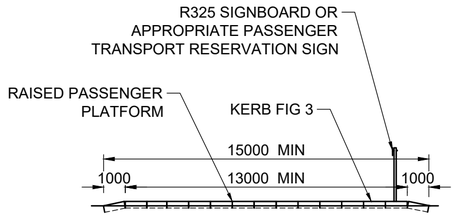

ELEVATION B-B

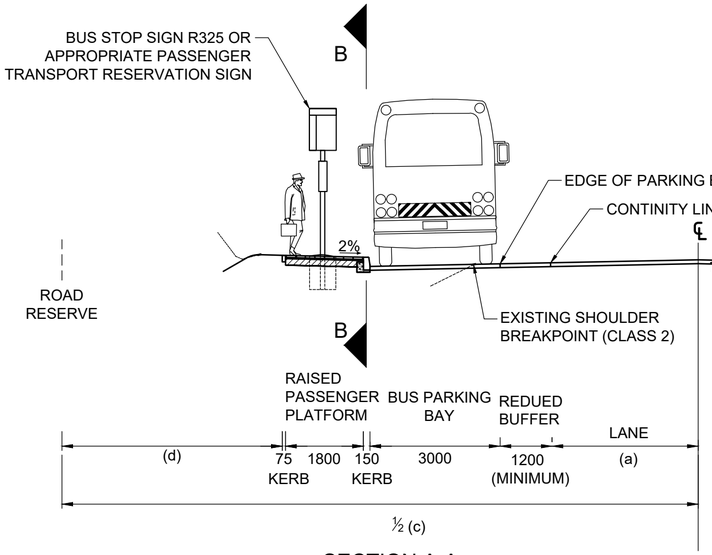

SECTION A-A

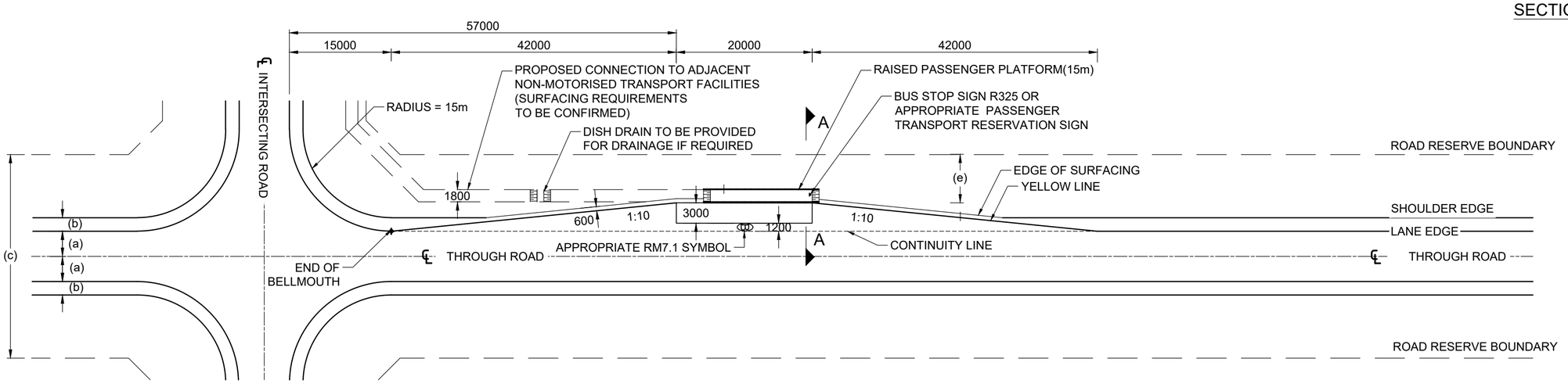

No.	DATE	ADDITIONS AND AMENDMENTS
0	OCT - 2023	ORIGINAL VERSION

STANDARD PLANS

WESTERN CAPE GOVERNMENT
DEPARTMENT OF INFRASTRUCTURE
TRANSPORT INFRASTRUCTURE BRANCH

RURAL BUS STOPS

BUS STOP TREATMENT TYPE 2 SURFACED SHOULDER AND BUS STOP WITH 1.2m REDUCED BUFFER (MINIMUM)

SCALE : N.T.S.

A2 ORIGINAL

INDEX NO. WCS/11/4/D4

PLAN NO. SHEET 4 OF 10

DECISION MATRIX							
WCG RURAL ROAD CLASSES		1	2	3		4 (UNSURFACED)	
ROAD RESERVE WIDTH (m)		30	25	25	20	25	20
ADT VOLUME (e.v.u) (vi)		2000-1000	1000-400	400 - 200		< 200	
		RECOMMENDED BUS STOP TREATMENT TYPES					
TYPICAL DESIGN SPEED (km/h)	100	1(2)(i)	1(2)(i)	1/2	2	4(ii)	
	80	1/2	1/2	3/4		4	
	<70	-	1/2	3/4(5)(iii)		4(5)(iii)	

THROUGH ROAD DESIGN SPEED kM/h	SIGHT DISTANCE REQUIRED (SD) (m)	SIGHT DISTANCE AVAILABLE (iv)
100	300	✓
80	240	✓
<70	210	✓

(iv) TRH17 - SINGLE UNIT (SU) DESIGN VEHICLE

STANDARD DIMENSIONS: TREATMENT TYPE 2A					
WCG RURAL ROAD CLASSES	DIMENSION				
	a	b	c	d	e
1	3700	2000	30000	2775	4800
2	3400	1500	25000	275 (v)	2300
3	3400	900	20000	INSUFFICIENT	
			(25000)	(275) (v)	(2300)
4	N/A (UNSURFACED ROAD)				

(v) AVAILABLE VERGE WIDTH RESTRICTED.
NOT SUITED FOR HIGH FILLS OR CUTS.

NOTES:

1. PAVEMENT DESIGN TO BE DEVELOPED.
2. STREET LIGHTING REQUIREMENT TO BE DEVELOPED.
3. ROADMARKINGS AND SIGNAGE REFER TO DRAWING WCS/11/4/D9.
4. THE TYPICAL DIMENSIONS PROVIDED FOLLOW THE STANDARD INTERSECTION LAYOUT AS SHOWN ON THE WCG'S STANDARD PLANS. FOR ANY DEVIATION PLEASE REFER THE CALCULATION DETAIL.
5. IF NO ADJACENT NON-MOTORISED TRANSPORT FACILITIES EXIST, THE 600mm TAPER APRON MAY BE WIDENED TO 900mm TO PROVIDE CONNECTION TO THE ROAD SHOULDER.

(i) ALTERNATE TYPE INDICATED IN (). ONLY TO BE USED IF VALID CONSTRAINTS EXIST.
(ii) HIGH SPEED ON GRAVEL ROAD: BUS STOP LOCATION TO BE EVALUATED.
(iii) TYPE 5 TREATMENT ONLY TO BE USED IF THE AVAILABLE VERGE IS SEVERELY RESTRICTED.
(vi) ADT VOLUME SHOWN ACCORDING TO WCG GEOMETRIC DESIGN MANUAL, BUT ARE OFTEN EXCEEDED IN PRACTICE.
MUST NOT BE USED TO DICTATE BUS STOP TYPE. HOWEVER WHERE TRAFFIC VOLUME EXCEEDS INDICATED VOLUME SIGNIFICANTLY THE POSSIBILITY OF AN UPGRADE OF THE ROAD IN THE NEAR FUTURE MUST BE CONSIDERED IN THE DESIGN APPROACH.

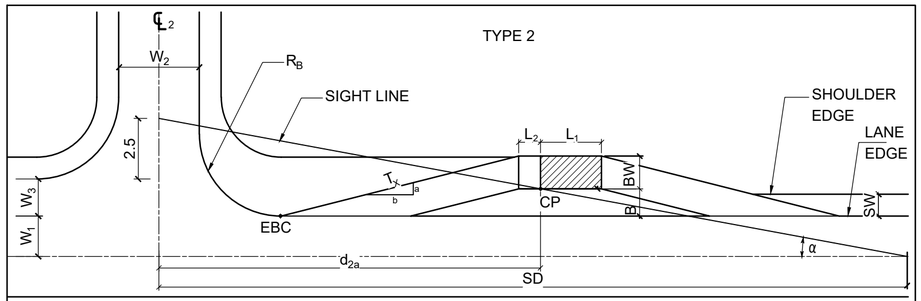

$$d_{2a} = 0.5w_2 + R_B + L_2 + \frac{b(BW + B)}{a}$$

CALCULATION DETAIL

LEGEND			
α	SIGHT TRIANGLE ANGLE = ARCTAN ($w_1 + w_3 + 2.5$)/SD	CP	CRITICAL POINT I.T.O SIGHT TRIANGLE (RIGHT REAR CORNER OF BUS)
w_1	WIDTH OF THROUGH ROAD	B	BUFFER > SW (1.4m MINIMUM)
w_2	WIDTH OF INTERSECTING ROAD	L_1	VEHICLE LENGTH (15m/22m/26m)
w_3	WIDTH OF TURNING LANE	L_2	5m STRAIGHTENING LENGTH
R_B	BELLMOUTH RADIUS	BW	BUSBAY WIDTH (3m)
℄1	CENTRELINE OF THROUGH ROAD	SW	SHOULDER WIDTH
℄2	CENTRELINE OF INTERSECTING ROAD	EBC	END OF BELLMOUTH CURVE
SD	SIGHT DISTANCE REQUIRED	T_X	TAPER (a:b)

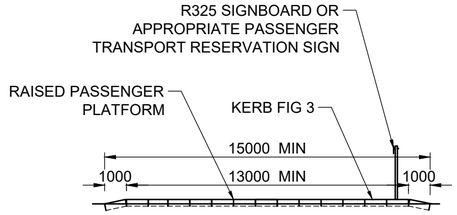

ELEVATION B-B

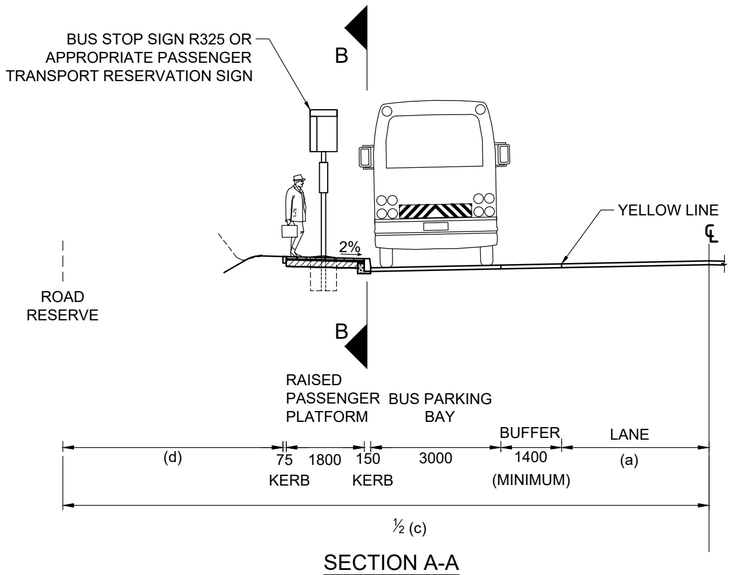

SECTION A-A

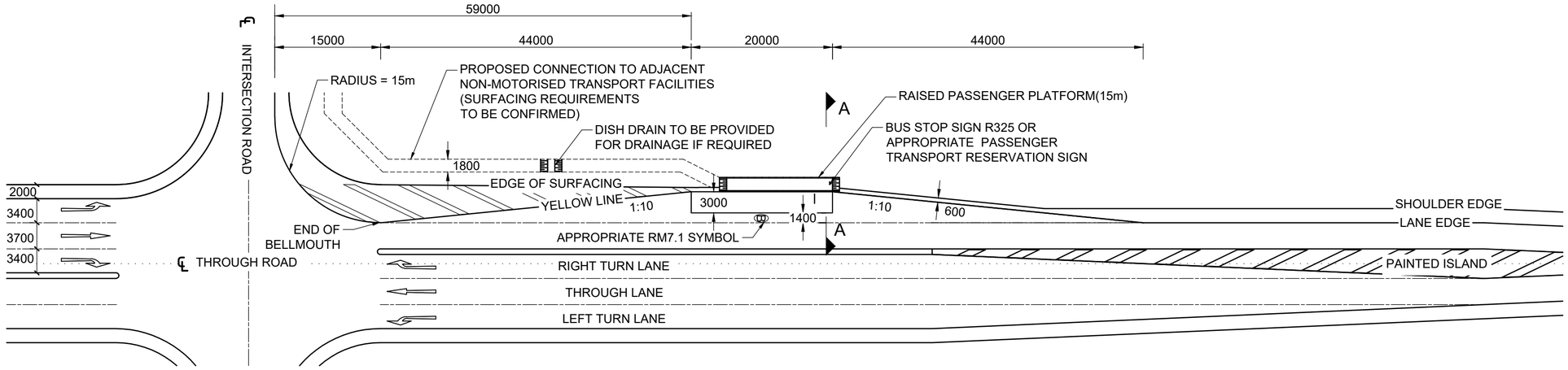

PLAN

No.	DATE	ADDITIONS AND AMENDMENTS
0	OCT - 2023	ORIGINAL VERSION

STANDARD PLANS

WESTERN CAPE GOVERNMENT
DEPARTMENT OF INFRASTRUCTURE
TRANSPORT INFRASTRUCTURE BRANCH

RURAL BUS STOPS

BUS STOP TREATMENT TYPE 2A ALTERNATIVE FOR TYPE 2 STOP ON HIGHER ORDER INTERSECTIONS

SCALE : N.T.S.

A2 ORIGINAL

INDEX NO. WCS/11/4/D5

PLAN NO. SHEET 5 OF 10

DECISION MATRIX						
WCG RURAL ROAD CLASSES		1	2	3		4 (UNSURFACED)	
ROAD RESERVE WIDTH (m)		30	25	25	20	25	20
ADT VOLUME (e.v.u) (vi)		2000-1000	1000-400	400 - 200		< 200	
		RECOMMENDED BUS STOP TREATMENT TYPES					
TYPICAL DESIGN SPEED (km/h)	100	1(2)(i)	1(2)(i)	1/2	2	4(ii)	
	80	1/2	1/2	3/4		4	
	<70	-	1/2	3/4(5) (iii)		4(5)(iii)	

THROUGH ROAD DESIGN SPEED kM/h	SIGHT DISTANCE REQUIRED (SD) (m)	SIGHT DISTANCE AVAILABLE (iV)
100	300	X
80	240	X
<70	210	X

(iv) TRH17 - SINGLE UNIT (SU) DESIGN VEHICLE

STANDARD DIMENSIONS: TREATMENT TYPE 3					
WCG RURAL ROAD CLASSES	DIMENSION				
	a	b	c	d	e
1	N/A				
2					
3	3400	900	20000 (25000)	1575 (4075)	3600 (6100)
4	N/A (UNSURFACED ROAD)				

NOTES:

1. PAVEMENT DESIGN TO BE DEVELOPED.
2. STREET LIGHTING REQUIREMENT TO BE DEVELOPED.
3. ROADMARKINGS AND SIGNAGE REFER TO DRAWING WCS/11/4/D9.
4. THE TYPICAL DIMENSIONS PROVIDED FOLLOW THE STANDARD INTERSECTION LAYOUT AS SHOWN ON THE WCG'S STANDARD PLANS. FOR ANY DEVIATION PLEASE REFER THE CALCULATION DETAIL.
5. IF NO ADJACENT NON-MOTORISED TRANSPORT FACILITIES EXIST, THE 600mm TAPER APRON MAY BE WIDENED TO 900mm TO PROVIDE CONNECTION TO THE ROAD SHOULDER.

(i) ALTERNATE TYPE INDICATED IN (). ONLY TO BE USED IF VALID CONSTRAINTS EXIST.
(ii) HIGH SPEED ON GRAVEL ROAD: BUS STOP LOCATION TO BE EVALUATED.
(iii) TYPE 5 TREATMENT ONLY TO BE USED IF THE AVAILABLE VERGE IS SEVERELY RESTRICTED.
(vi) ADT VOLUME SHOWN ACCORDING TO WCG GEOMETRIC DESIGN MANUAL, BUT ARE OFTEN EXCEEDED IN PRACTICE.
MUST NOT BE USED TO DICTATE BUS STOP TYPE. HOWEVER WHERE TRAFFIC VOLUME EXCEEDS INDICATED VOLUME SIGNIFICANTLY THE POSSIBILITY OF AN UPGRADE OF THE ROAD IN THE NEAR FUTURE MUST BE CONSIDERED IN THE DESIGN APPROACH

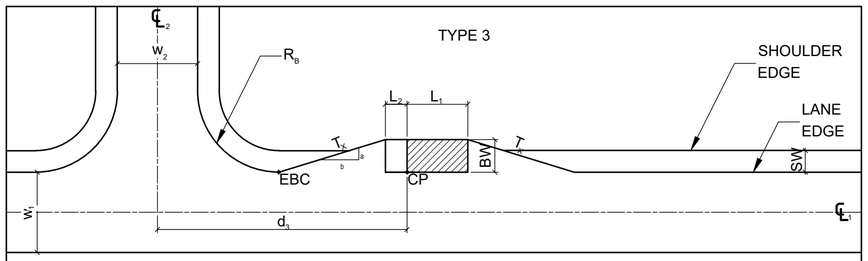

CALCULATION DETAIL

LEGEND			
α	SIGHT TRIANGLE ANGLE = ARCTAN (0.5w_1 + 2.5)/SD	CP	CRITICAL POINT I.T.O SIGHT TRIANGLE (RIGHT REAR CORNER OF BUS)
w_1	WIDTH OF THROUGH ROAD	L_1	VEHICLE LENGTH (15m/22m/26m)
w_2	WIDTH OF INTERSECTING ROAD	L_2	5m STRAIGHTENING LENGTH
R_B	BELLMOUTH RADIUS	BW	BUSBAY WIDTH (3m)
$\mathbb{C}_1$	CENTRELINE OF THROUGH ROAD	SW	SHOULDER WIDTH
$\mathbb{C}_2$	CENTRELINE OF INTERSECTING ROAD	EBC	END OF BELLMOUTH CURVE
SD	SIGHT DISTANCE REQUIRED	TX	TAPER (a:b)

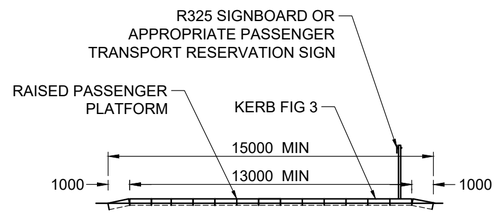

ELEVATION B-B

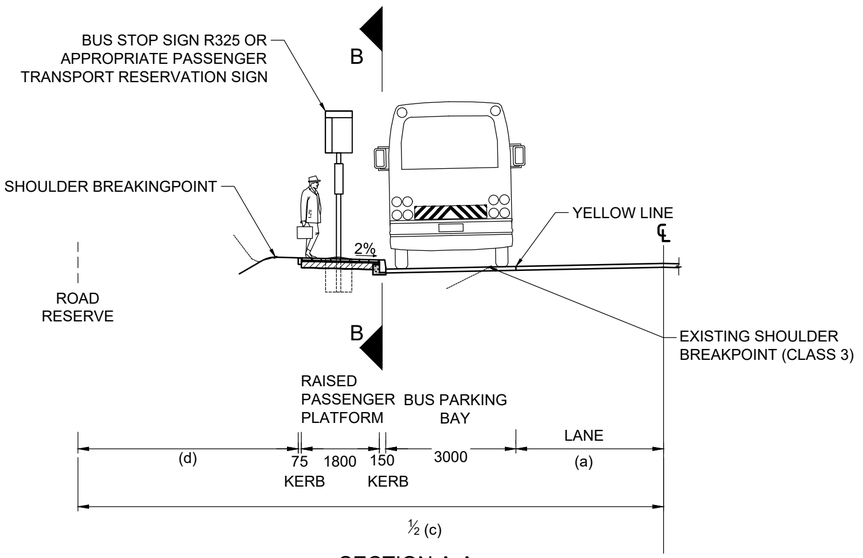

SECTION A-A

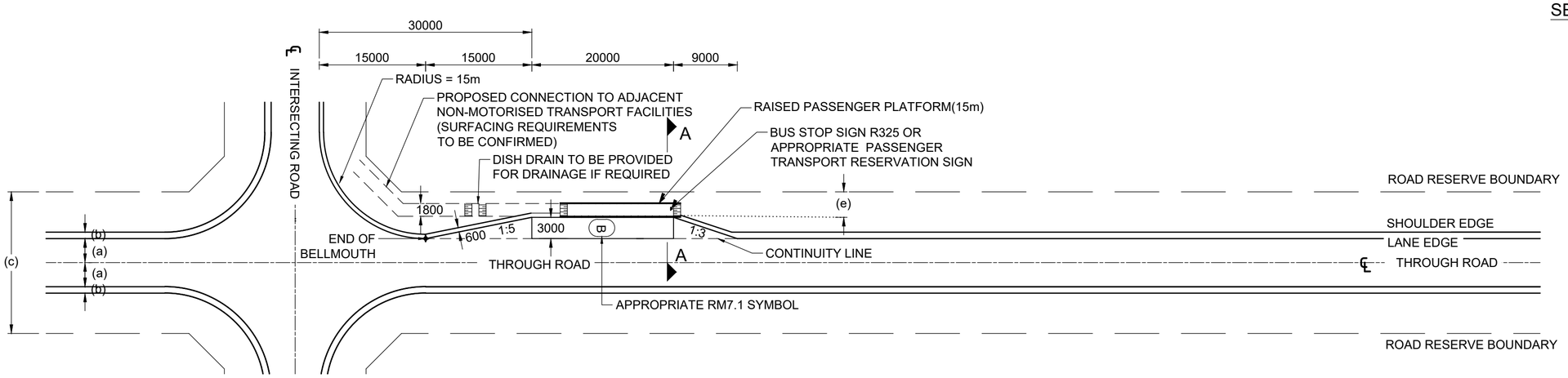

PLAN

No.	DATE	ADDITIONS AND AMENDMENTS
0	OCT - 2023	ORIGINAL VERSION

STANDARD PLANS

WESTERN CAPE GOVERNMENT
DEPARTMENT OF INFRASTRUCTURE
TRANSPORT INFRASTRUCTURE BRANCH

RURAL BUS STOPS

BUS STOP TREATMENT TYPE 3
SURFACED SHOULDER AND BUS STOP WITHOUT BUFFER

SCALE : N.T.S.

A2 ORIGINAL

INDEX NO. WCS/11/4/D6

PLAN NO. SHEET 6 OF 10

DECISION MATRIX							
WCG RURAL ROAD CLASSES		1	2	3		4 (UNSURFACED)	
ROAD RESERVE WIDTH (m)		30	25	25	20	25	20
ADT VOLUME (e.v.u) (vi)		2000-1000	1000-400	400 - 200		< 200	
		RECOMMENDED BUS STOP TREATMENT TYPES					
TYPICAL DESIGN SPEED (km/h)	100	1(2)(i)	1(2)(i)	1/2	2	4 (ii)	
	80	1/2	1/2	3/4		4	
	<70	-	1/2	3/4(5) (iii)		4(5) (iii)	

THROUGH ROAD DESIGN SPEED kM/h	SIGHT DISTANCE REQUIRED (SD) (m)	SIGHT DISTANCE AVAILABLE (iV)
100	300	X
80	240	X
<70	210	X

(iv) TRH17 - SINGLE UNIT (SU) DESIGN VEHICLE

STANDARD DIMENSIONS: TREATMENT TYPE 4					
WCG RURAL ROAD CLASSES	DIMENSION				
	a	b	c	d	e
1	N/A				
2					
3	3400	900	20000	1150	3300
			(25000)	(3650)	(5800)
4	4300	N/A	20000	250 (v)	2400
			(25000)	(2750)	(4900)
	4900	N/A	20000	INSUFFICIENT	
			(25000)	(2150)	(4300)

(v) AVAILABLE VERGE WIDTH RESTRICTED. NOT SUITED FOR HIGH FILLS OR CUTS.

NOTES:

1. PAVEMENT DESIGN TO BE DEVELOPED.
2. STREET LIGHTING REQUIREMENT TO BE DEVELOPED.
3. ROADMARKINGS AND SIGNAGE REFER TO DRAWING WCS/11/4/D9.
4. THE TYPICAL DIMENSIONS PROVIDED FOLLOW THE STANDARD INTERSECTION LAYOUT AS SHOWN ON THE WCG'S STANDARD PLANS. FOR ANY DEVIATION PLEASE REFER THE CALCULATION DETAIL.

(i) ALTERNATE TYPE INDICATED IN (). ONLY TO BE USED IF VALID CONSTRAINTS EXIST.
(ii) HIGH SPEED ON GRAVEL ROAD: BUS STOP LOCATION TO BE EVALUATED.
(iii) TYPE 5 TREATMENT ONLY TO BE USED IF THE AVAILABLE VERGE IS SEVERELY RESTRICTED.
(vi) ADT VOLUME SHOWN ACCORDING TO WCG GEOMETRIC DESIGN MANUAL, BUT ARE OFTEN EXCEEDED IN PRACTICE. MUST NOT BE USED TO DICTATE BUS STOP TYPE. HOWEVER WHERE TRAFFIC VOLUME EXCEEDS INDICATED VOLUME SIGNIFICANTLY THE POSSIBILITY OF AN UPGRADE OF THE ROAD IN THE NEAR FUTURE MUST BE CONSIDERED IN THE DESIGN APPROACH.

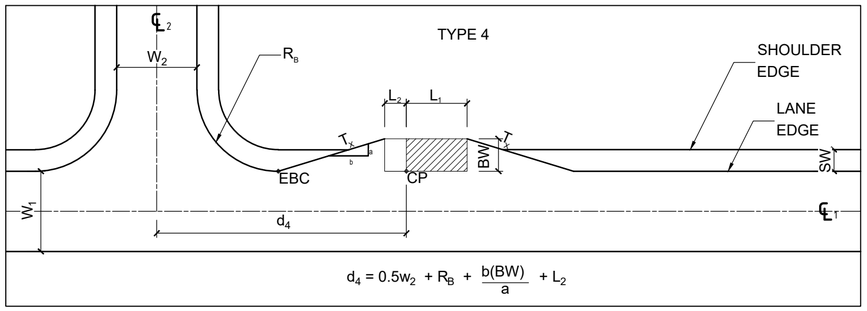

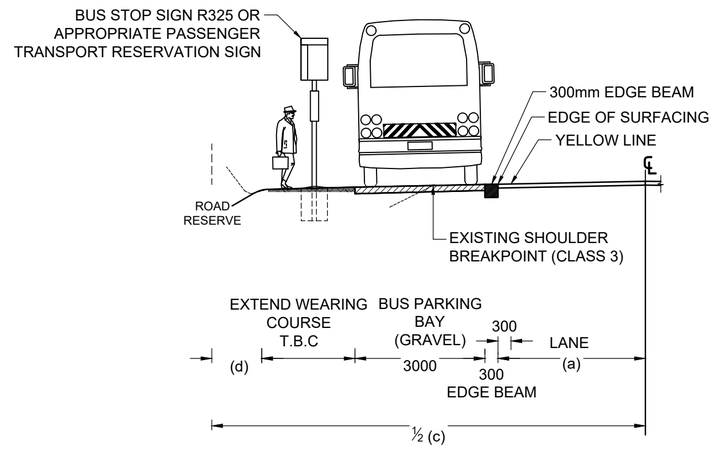

SECTION A-A

CALCULATION DETAIL

LEGEND			
α	SIGHT TRIANGLE ANGLE = ARCTAN (0.5w. + 2.5)/SD	CP	CRITICAL POINT I.T.O SIGHT TRIANGLE (RIGHT REAR CORNER OF BUS)
w_1	WIDTH OF THROUGH ROAD	L_1	VEHICLE LENGTH (15m/22m/26m)
w_2	WIDTH OF INTERSECTING ROAD	L_2	5m STRAIGHTENING LENGTH
R_B	BELLMOUTH RADIUS	BW	BUSBAY WIDTH (3m)
$\mathcal{L}_1$	CENTRELINE OF THROUGH ROAD	SW	SHOULDER WIDTH
$\mathcal{L}_2$	CENTRELINE OF INTERSECTING ROAD	EBC	END OF BELLMOUTH CURVE
SD	SIGHT DISTANCE REQUIRED	T_X	TAPER (a:b)

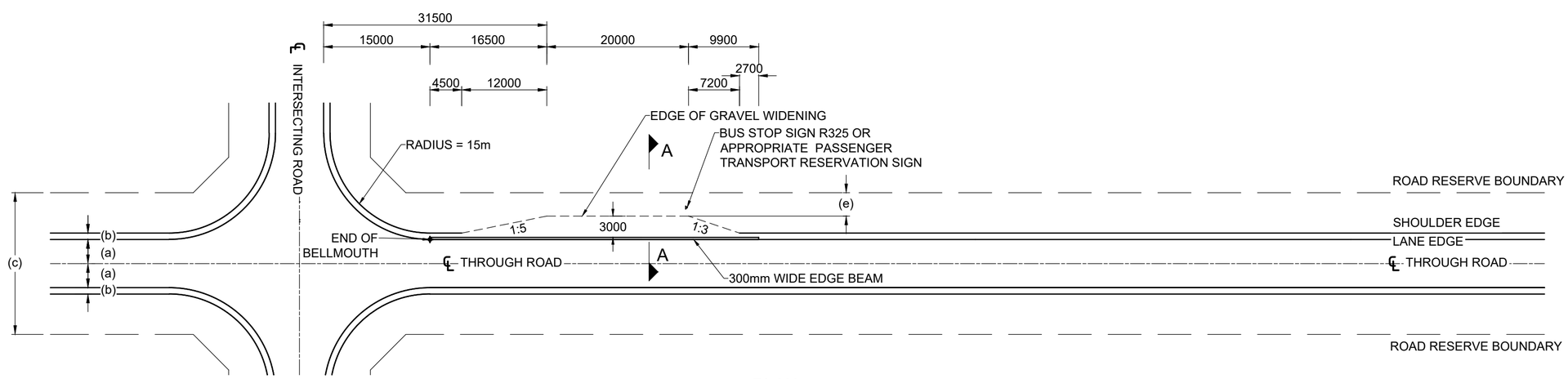

PLAN

No.	DATE	ADDITIONS AND AMENDMENTS
0	OCT - 2023	ORIGINAL VERSION

STANDARD PLANS

WESTERN CAPE GOVERNMENT
DEPARTMENT OF INFRASTRUCTURE
TRANSPORT INFRASTRUCTURE BRANCH

RURAL BUS STOPS

BUS STOP TREATMENT TYPE 4
UNSURFACED SHOULDER AND BUS STOP WITHOUT BUFFER

SCALE : N.T.S.

A2 ORIGINAL

INDEX NO. WCS/11/4/D7

PLAN NO. SHEET 7 OF 10

DECISION MATRIX							
WCG RURAL ROAD CLASSES		1	2	3		4 (UNSURFACED)	
ROAD RESERVE WIDTH (m)		30	25	25	20	25	20
ADT VOLUME (e.v.u) (vi)		2000-1000	1000-400	400 - 200		< 200	
		RECOMMENDED BUS STOP TREATMENT TYPES					
TYPICAL DESIGN SPEED (km/h)	100	1(2)(i)	1(2)(i)	1/2	2	4(ii)	
	80	1/2	1/2	3/4		4	
	<70	-	1/2	3/4(5)(iii)		4(5)(iii)	

THROUGH ROAD DESIGN SPEED kM/h	SIGHT DISTANCE REQUIRED (SD) (m)	SIGHT DISTANCE AVAILABLE (iV)
100	300	X
80	240	X
<70	210	X

(iv) TRH17 - SINGLE UNIT (SU) DESIGN VEHICLE

STANDARD DIMENSIONS: TREATMENT TYPE 5					
WCG RURAL ROAD CLASSES	DIMENSION				
	a	b	c	d	e
1	N/A				
2					
3	3400	900	20000 (25000)	3550 (6050)	5700 (8200)
4	4300	N/A	20000 (25000)	3550 (6050)	5700 (8200)
	4900	N/A	20000 (25000)	2950 (5450)	5100 (7600)

NOTES:

1. PAVEMENT DESIGN TO BE DEVELOPED.
2. STREET LIGHTING REQUIREMENT TO BE DEVELOPED.
3. ROADMARKINGS AND SIGNAGE REFER TO DRAWING WCS/11/4/D9.
4. THE TYPICAL DIMENSIONS PROVIDED FOLLOW THE STANDARD INTERSECTION LAYOUT AS SHOWN ON THE WCG'S STANDARD PLANS. FOR ANY DEVIATION PLEASE REFER THE CALCULATION DETAIL.

(i) ALTERNATE TYPE INDICATED IN (). ONLY TO BE USED IF VALID CONSTRAINTS EXIST.
(ii) HIGH SPEED ON GRAVEL ROAD: BUS STOP LOCATION TO BE EVALUATED.
(iii) TYPE 5 TREATMENT ONLY TO BE USED IF THE AVAILABLE VERGE IS SEVERELY RESTRICTED.
(vi) ADT VOLUME SHOWN ACCORDING TO WCG GEOMETRIC DESIGN MANUAL, BUT ARE OFTEN EXCEEDED IN PRACTICE. MUST NOT BE USED TO DICTATE BUS STOP TYPE. HOWEVER WHERE TRAFFIC VOLUME EXCEEDS INDICATED VOLUME SIGNIFICANTLY THE POSSIBILITY OF AN UPGRADE OF THE ROAD IN THE NEAR FUTURE MUST BE CONSIDERED IN THE DESIGN APPROACH.

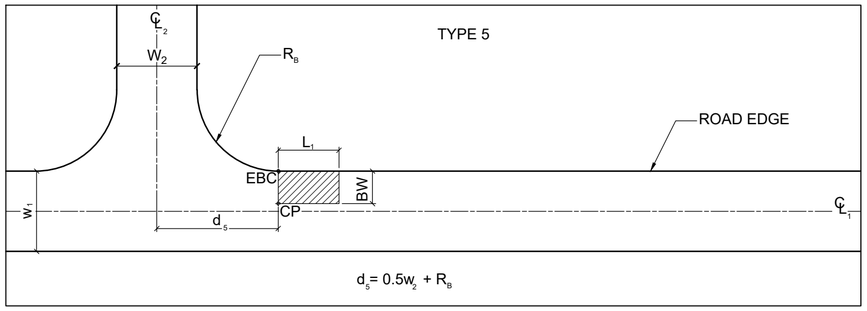

CALCULATION DETAIL

LEGEND			
α	SIGHT TRIANGLE ANGLE = ARCTAN (0.5w_2 + 2.5)/SD	CP	CRITICAL POINT I.T.O SIGHT TRIANGLE (RIGHT REAR CORNER OF BUS)
w_1	WIDTH OF THROUGH ROAD	L_1	VEHICLE LENGTH (15m/22m/26m)
w_2	WIDTH OF INTERSECTING ROAD	L_2	5m STRAIGHTENING LENGTH
R	BELLMOUTH RADIUS	BW	BUSBAY WIDTH (3m)
$\mathcal{L}_1$	CENTRELINE OF THROUGH ROAD	SW	SHOULDER WIDTH
$\mathcal{L}_2$	CENTRELINE OF INTERSECTING ROAD	EBC	END OF BELLMOUTH CURVE
SD	SIGHT DISTANCE REQUIRED	T_X	TAPER (a:b)

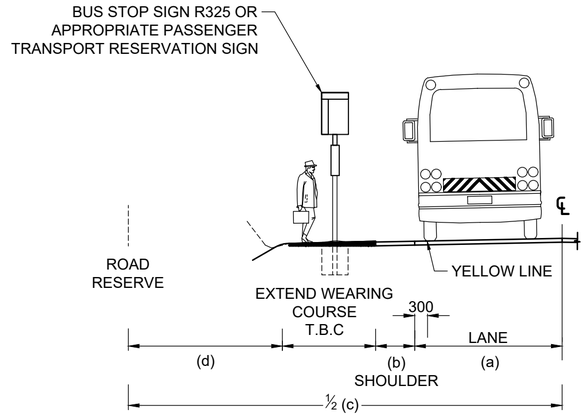

SECTION A-A

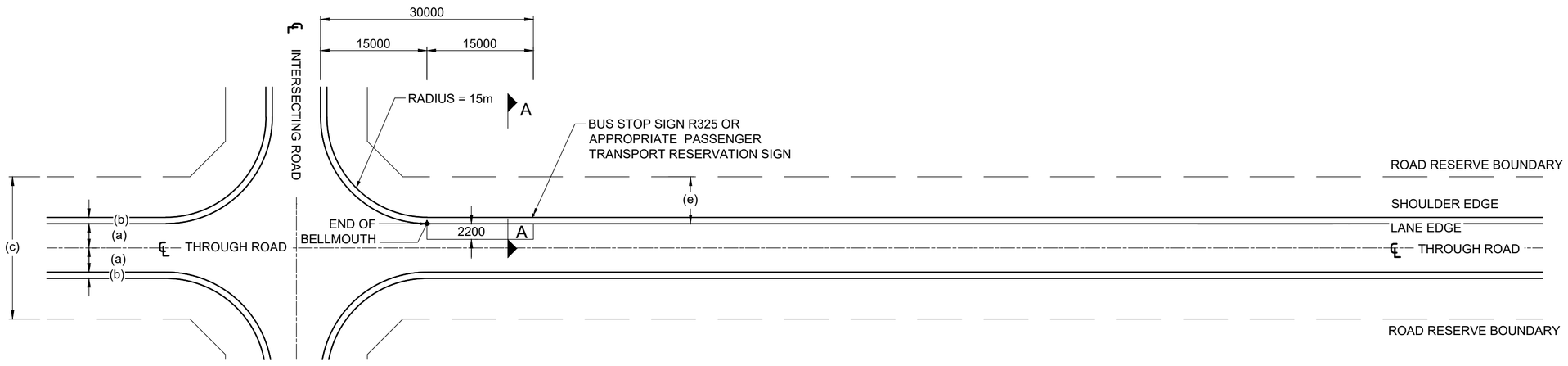

PLAN

No.	DATE	ADDITIONS AND AMENDMENTS
0	OCT - 2023	ORIGINAL VERSION

STANDARD PLANS

WESTERN CAPE GOVERNMENT
DEPARTMENT OF INFRASTRUCTURE
TRANSPORT INFRASTRUCTURE BRANCH

RURAL BUS STOPS

BUS STOP TREATMENT TYPE 5
IN LANE BUS STOP

SCALE : N.T.S.

A2 ORIGINAL

INDEX NO.
WCS/11/4/D8

PLAN NO.
SHEET 8 OF 10

NOTES:

1. ALL ROAD MARKINGS TO FOLLOW SOUTH AFRICAN ROAD TRAFFIC SIGNS MANUAL (SARTSM) SPECIFICATIONS
2. LINE MARKING WIDTH TO MATCH EXISTING OR ADJACENT SECTIONS

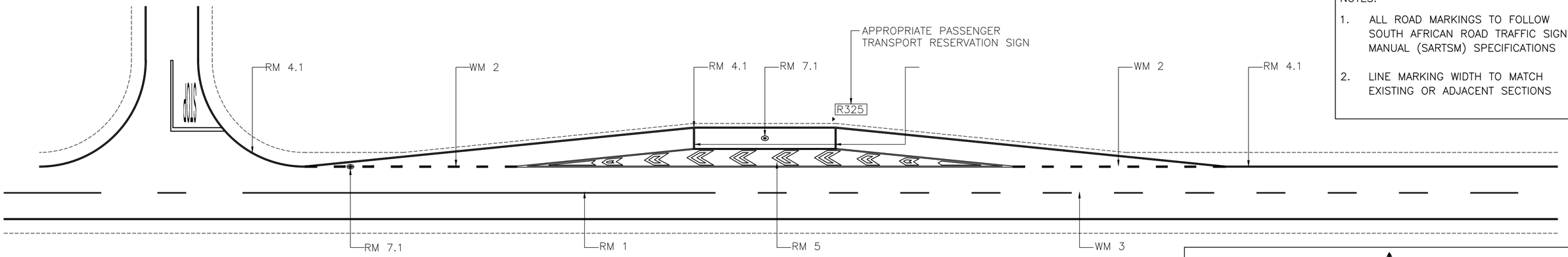

ROAD MARKING FOR BUS STOP TREATMENT TYPE 1

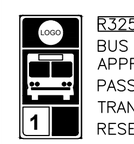

R325
BUS STOP SIGN OR APPROPRIATE PASSENGER TRANSPORT RESERVATION SIGN



W339
WARNING SIGN

N11.4
IN LANE BUS STOP AHEAD

N11.3
300m

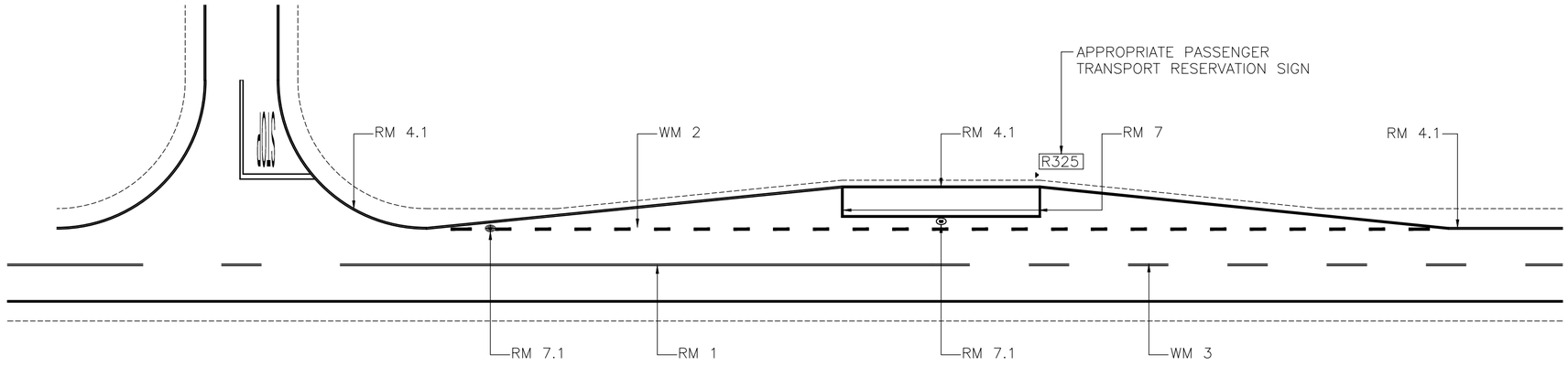

ROAD MARKING FOR BUS STOP TREATMENT TYPE 2

MARKING	DESCRIPTION	LENGTH (mm)	WIDTH (mm)	COLOUR
RM1	NO OVERTAKING LINE60	1000	100 (MIN) / 150	W
RM4.1	LEFT EDGE LINE		100 (MIN) / 150	Y
RM5	PAINTED ISLANDS – EDGE LINE		100 (MIN) / 150	W
	PAINTED ISLANDS – BAR		300	Y
RM7	EXCLUSIVE PARKING BAY		100 (MIN) / 150	Y
RM7.1	EXCLUSIVE PARKING BAY SYMBOL: NEXT TO BAY	1000	600	Y
	EXCLUSIVE PARKING BAY SYMBOL: START OF TAPER (OPTIONAL)	1000	600	W
WM2	CONTINUITY LINE STANDARD			
	LINE	2000	100 (MIN) / 300	W
	GAP	4000		
WM3	DIVIDING LINE			
	LINE	4000	100 (MIN) / 300	W
	GAP	8000		

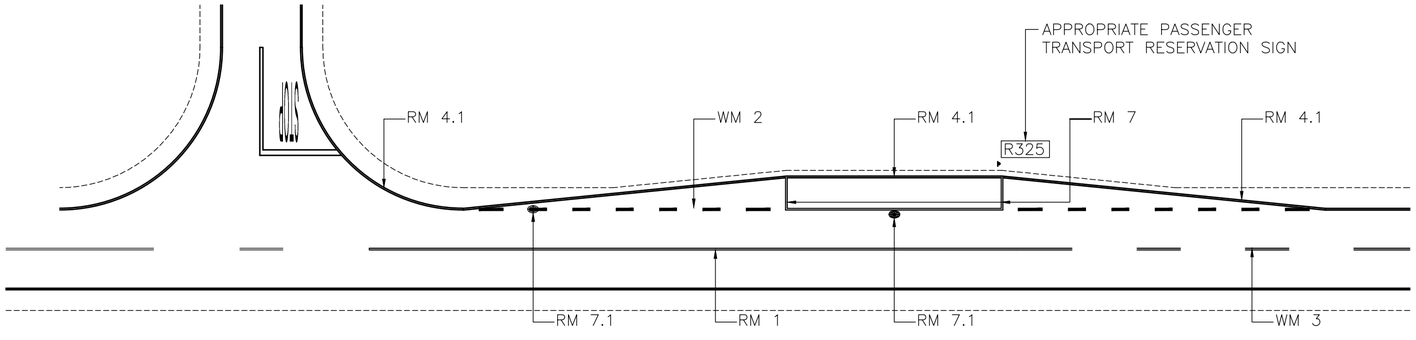

ROAD MARKING FOR BUS STOP TREATMENT TYPE 3

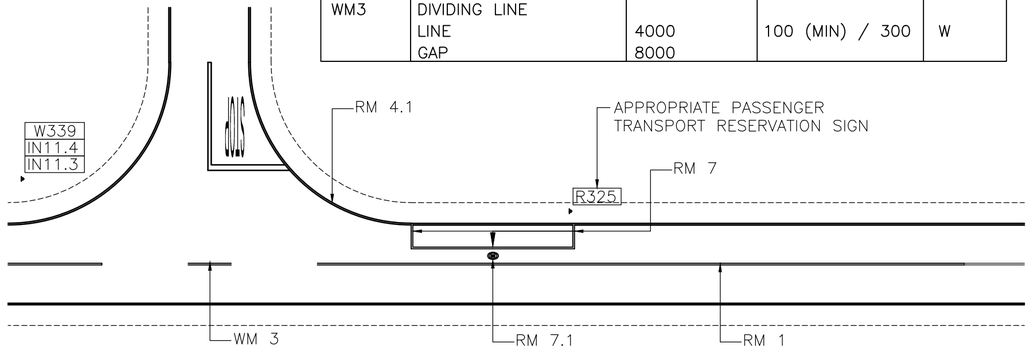

ROAD MARKING FOR BUS STOP TREATMENT TYPE 5

No.	DATE	ADDITIONS AND AMENDMENTS
0	OCT - 2023	ORIGINAL VERSION

STANDARD PLANS

WESTERN CAPE GOVERNMENT
DEPARTMENT OF INFRASTRUCTURE
TRANSPORT INFRASTRUCTURE BRANCH

RURAL BUS STOPS

ROAD MARKINGS AND SIGNAGE

SCALE : N.T.S.

A2 ORIGINAL

INDEX NO. WCS/11/4/D9

PLAN NO. SHEET 9 OF 10

DECISION MATRIX						
ROAD CLASS (RISFSA/TRH26)		1	2	3	4	5
ROAD RESERVE WIDTH (m)		← MOBILITY			ACCESS/ACTIVITY →	
TYPICAL FEATURES (TRH 26) ROAD RESERVE WIDTH (m)		80-60	70-40	50-30	25	20
AADT VOLUME	SHORT ROUTES	≥100000	≥25000	100 TO 2000	≤1000	≤500
	MEDIUM ROUTES	≥5000	≥2000			
	LONG ROUTES	≥1000	≥500			
DESIGN SPEEDS (km/h)		120	120	120-100	100-80	80-60

DESIGN SPEED (km/h)	PREFERRED BUS STOP TREATMENT TYPE				
120	1 i	1	1	-	-
100	1 i	1(2)	2	2	-
80	1 i	1(2)	2	3 ii	3 ii
<70	1 i	1(2)	3 ii	3 ii (5)	3 ii (5)

i PUBLIC TRANSPORT STOPS ON HIGH MOBILITY ROADS ARE UNDESIRABLE: RE-EVALUATE STOP LOCATION.
ii FOR STOPS LOCATED ON GRAVEL SHOULDERS, TYPE 4 STOP SHOULD BE USED.
() ALTERNATE TYPE INDICATED IN (). ALTERNATE ONLY TO BE USED IF VALID CONSTRAINTS EXIST.

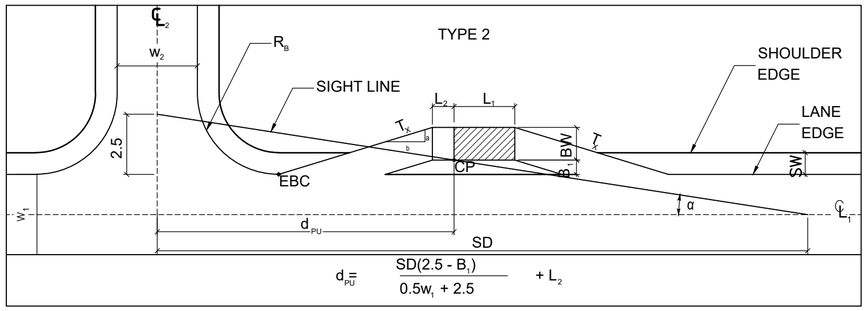

LEGEND			
α	SIGHT TRIANGLE ANGLE = ARCTAN (0.5w. + 2.5)/SD	CP	CRITICAL POINT I.T.O SIGHT TRIANGLE (RIGHT REAR CORNER OF BUS)
w_1	WIDTH OF THROUGH ROAD	L_1	VEHICLE LENGTH (15m/22m/26m)
w_2	WIDTH OF INTERSECTING ROAD	L_2	5m STRAIGHTENING LENGTH
R_B	BELLMOUTH RADIUS	BW	BUSBAY WIDTH (3m)
$\mathbb{C}_1$	CENTRELINE OF THROUGH ROAD	SW	SHOULDER WIDTH
$\mathbb{C}_2$	CENTRELINE OF INTERSECTING ROAD	EBC	END OF BELLMOUTH CURVE
SD	SIGHT DISTANCE REQUIRED	T_X	TAPER (a:b)
B_1	REDUCED BUFFER (1.5m MINIMUM)		

NOTES:

1. PAVEMENT DESIGN TO BE DEVELOPED.
2. STREET LIGHTING REQUIREMENT TO BE DEVELOPED.
3. ROADMARKINGS AND SIGNAGE REFER TO DRAWING WCS/11/4/D9.
4. THE TYPICAL DIMENSIONS PROVIDED FOLLOW THE STANDARD INTERSECTION LAYOUT AS SHOWN ON THE WCG'S STANDARD PLANS. FOR ANY DEVIATION PLEASE REFER THE CALCULATION DETAIL.
5. IF NO ADJACENT NON-MOTORISED TRANSPORT FACILITIES EXIST, THE 600mm TAPER APRON MAY BE WIDENED TO 900mm TO PROVIDE CONNECTION TO THE ROAD SHOULDER.

STANDARD DIMENSIONS: TREATMENT TYPE PERI-URBAN					
WCG RURAL ROAD CLASSES	DIMENSION				
	a	b	c	d	e
1	3700	2000	30000	4775	6800
2	3400	1500	25000	2575	4600
3	3400	900	20000 (25000)	INSUFFICIENT v (2575)	(4600)
4	N/A (UNSURFaACED ROAD)				

v AVAILABLE VERGE WIDTH RESTRICTED. NOT SUITED FOR HIGH FILLS AND CUTS.

NOTE: THESE DIMENSIONS WILL VARY PER SITE AND ARE PROVIDED AS AN INDICATION. BASED ON THE WCG GEOMETRIC DESIGN MANUAL'S STANDARD ROAD CLASSES.

THROUGH ROAD DESIGN SPEED kM/h	SIGHT DISTANCE REQUIRED (SD) (m)	SIGHT DISTANCE AVAILABLE iV
100	300	✗
80	240	✓
<70	210	✓

iv TRH17 - SINGLE UNIT (SU) DESIGN VEHICLE

CALCULATION DETAIL

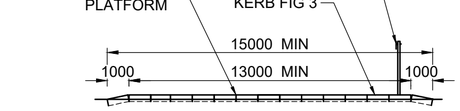

ELEVATION B-B

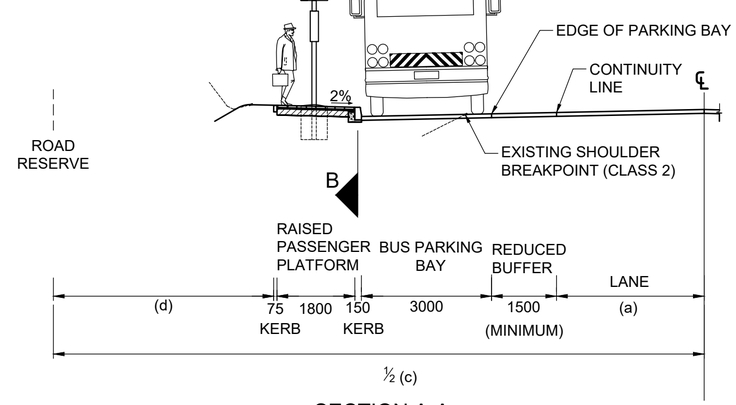

SECTION A-A

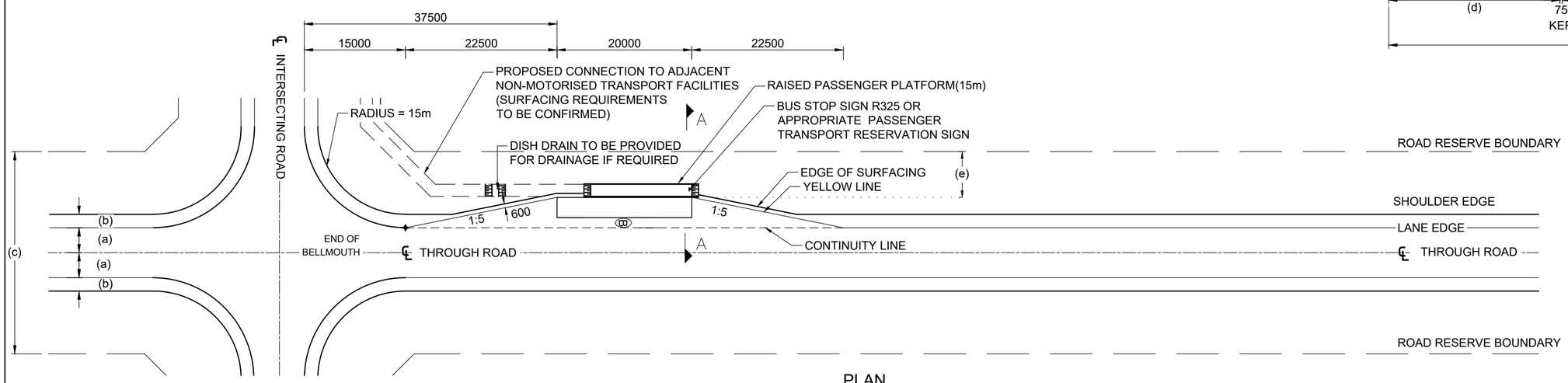

PLAN

No.	DATE	ADDITIONS AND AMENDMENTS
0	OCT - 2023	ORIGINAL VERSION

STANDARD PLANS

WESTERN CAPE GOVERNMENT
DEPARTMENT OF INFRASTRUCTURE
TRANSPORT INFRASTRUCTURE BRANCH

RURAL BUS STOPS

BUS STOP TREATMENT TYPE : PERI-URBAN SURFACED SHOULDER AND BUS STOP WITH 1.5m REDUCED BUFFER (MINIMUM)

SCALE : N.T.S.

A2 ORIGINAL

INDEX NO. WCS/11/4/D10

PLAN NO. SHEET 10 OF 10

TABLE A

GRADE %	MIN. LENGTH OF EMBAYED CLIMBING LANE					
	PERCENTAGE TRUCKS					
	5	10	15	20	25	30
3	600	350	250	200	160	160
4	470	260	180	150	130	110
5	360	200	150	120	100	100
6	310	170	130	100		
7	270	150	110			
8	240	130	100			
9	210	120				
10	190	110				
11	180	100				
12	170	100				

NOTES :

1. LANE WIDTH MAY BE REDUCED ON THROUGH LANE TO 3,4m PER LANE AFTER CONSULTATION WITH P.R.E.
2. APPLICABLE FOR LOWER SPEED RURAL ROADS AND WHERE AUXILIARY LANES ARE WARRANTED

REFER TO DWG No WCS/57/1/D1 FOR DETAILS OF ROADSIGNS AND ROAD MARKINGS

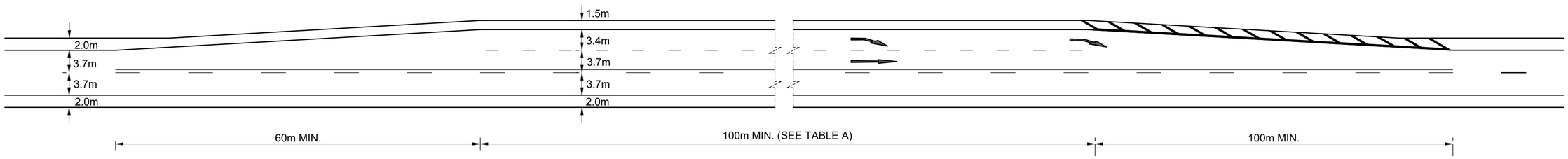

TYPICAL CLIMBING LANE

No.	DATE	ADDITIONS AND AMENDMENTS
0	OCT - 2023	ORIGINAL VERSION

STANDARD PLANS

WESTERN CAPE GOVERNMENT
DEPARTMENT OF INFRASTRUCTURE
TRANSPORT INFRASTRUCTURE BRANCH

AUXILIARY LANES

GEOMETRIC LAYOUT

SCALE : N.T.S.

A2 ORIGINAL

INDEX NO.
WCS/11/5/D1

PLAN NO.
SHEET 1 OF 1



SCALE: 1:20

NOTES :

1. ALL EMBLEMS TO BE DISPLAYED IN FULL COLOURS.
2. COLOUR
   (a) WHITE : MATT WHITE
   (b) BLUE : PANTONE 280C CMYK: C100; M69; Y0; K11
3. TWO NAMEBOARDS PER CONTRACT, SHALL BE ERECTED AT APPROACHES TO THE CONTRACT AS DIRECTED AND APPROVED BY THE ENGINEER. A MINIMUM DISTANCE (m) EQUAL TO THE OPERATING SPEED AWAY FROM ANY ROAD SIGN.
4. REFER TO WCS/56/1/D1- D2 AND WCS/56/1/C2- C5 FOR DETAIL OF SUPPORT STRUCTURE.
5. DESCRIPTION OF PROJECT.
   EXAMPLE :
   RECONSTRUCTION OF ROUTE 62 (50KM) BETWEEN BARRYDALE AND LADISMITH
   WITH APPROVAL, SIGN WIDTH MAY BE INCREASED TO SUIT TEXT.
6. CONTRACT CONTACT NUMBER : RESIDENT ENGINEER'S OFFICE

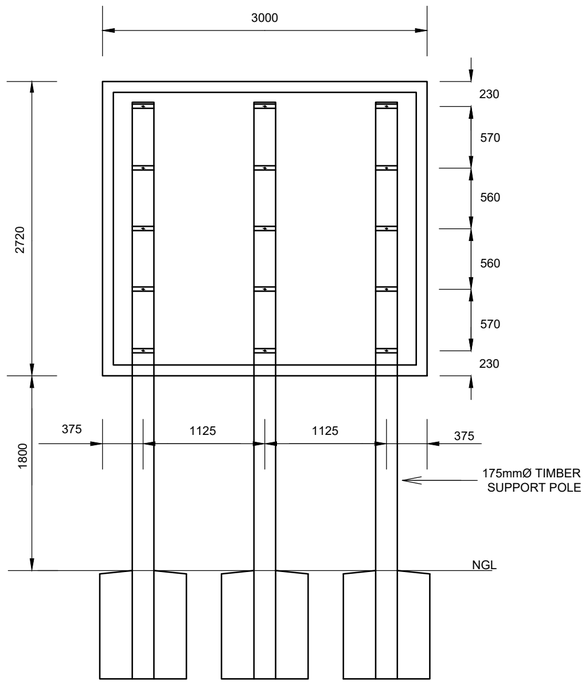

POSITIONING OF SUPPORTS

SCALE: 1:40

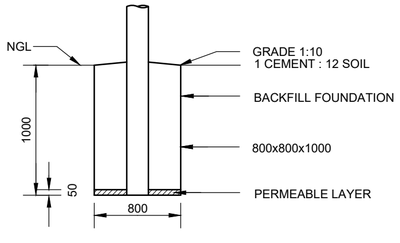

FOOTING DETAIL

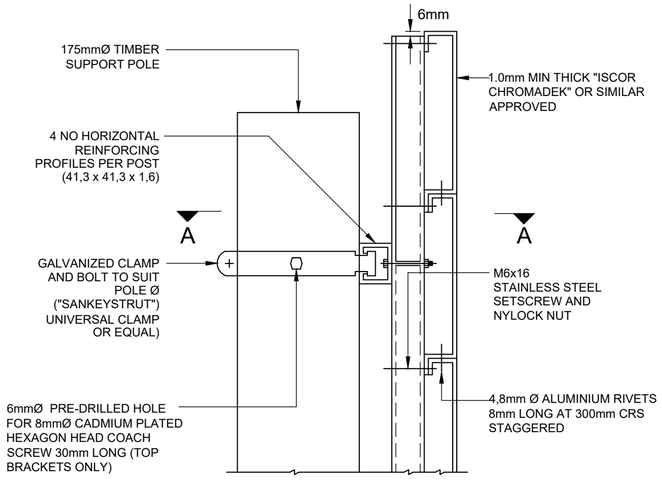

FIXING DETAIL

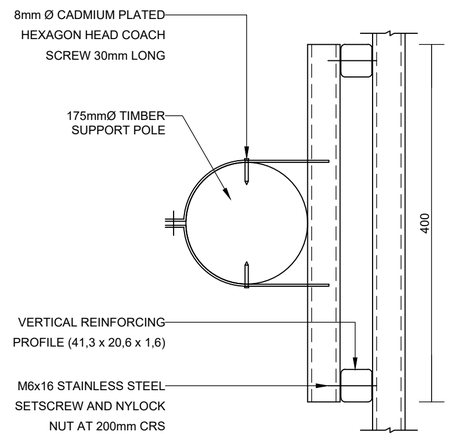

SECTION A-A

No.	DATE	ADDITIONS AND AMENDMENTS
0	OCT - 2023	ORIGINAL VERSION

STANDARD PLANS

WESTERN CAPE GOVERNMENT
DEPARTMENT OF INFRASTRUCTURE
TRANSPORT INFRASTRUCTURE BRANCH

CONTRACT NAME BOARDS

CONTRACT NAME BOARD-ENGLISH

SCALE : N.T.S.

A2 ORIGINAL

INDEX NO. WCS/13/1/C1

PLAN NO. SHEET 1 OF 7



SCALE: 1:20

NOTES :

1. ALL EMBLEMS TO BE DISPLAYED IN FULL COLOURS.
2. COLOUR
   (a) WHITE : MATT WHITE
   (b) BLUE : PANTONE 280C CMYK: C100; M69; Y0; K11
3. TWO NAMEBOARDS PER CONTRACT, SHALL BE ERECTED AT APPROACHES TO THE CONTRACT AS DIRECTED AND APPROVED BY THE ENGINEER. A MINIMUM DISTANCE (m) EQUAL TO THE OPERATING SPEED AWAY FROM ANY ROAD SIGN.
4. REFER TO WCS/56/1/D1- D2 AND WCS/56/1/C2- C5 FOR DETAIL OF SUPPORT STRUCTURE.
5. DESCRIPTION OF PROJECT.
   EXAMPLE :
   RECONSTRUCTION OF ROUTE 62 (50KM) BETWEEN BARRYDALE AND LADISMITH
   WITH APPROVAL, SIGN WIDTH MAY BE INCREASED TO SUIT TEXT.
6. CONTRACT CONTACT NUMBER : RESIDENT ENGINEER'S OFFICE

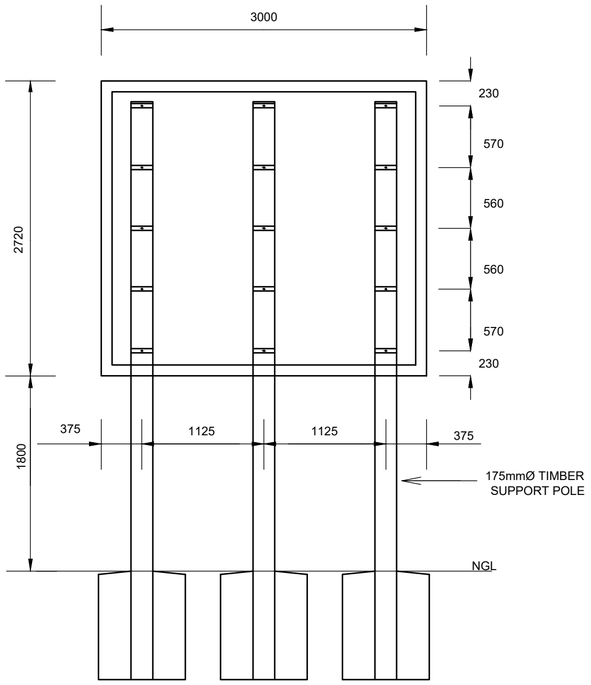

POSITIONING OF SUPPORTS

SCALE: 1:40

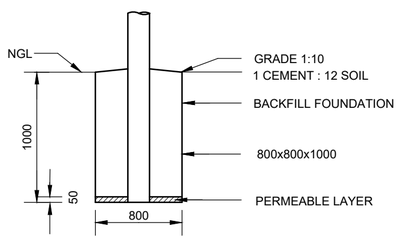

FOOTING DETAIL

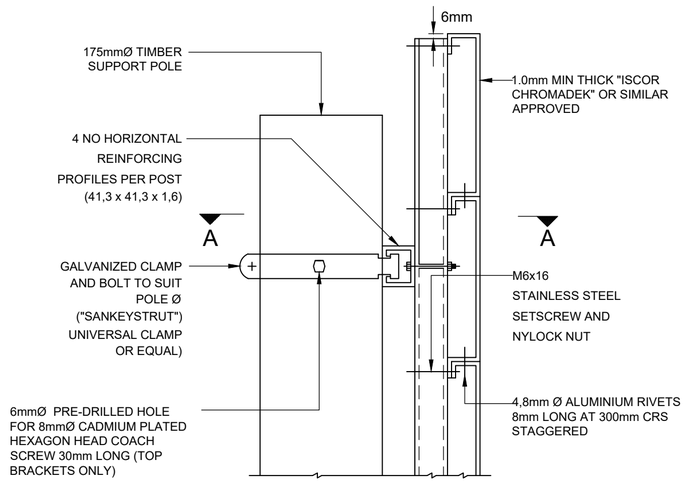

FIXING DETAIL

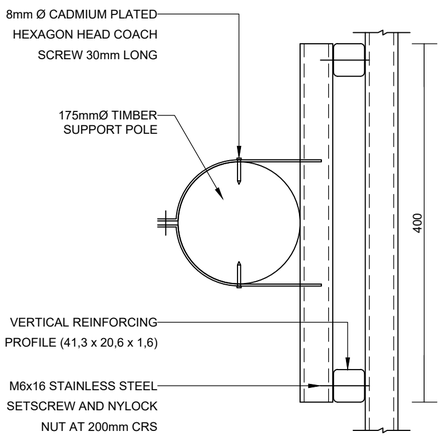

SECTION A-A

No.	DATE	ADDITIONS AND AMENDMENTS
0	OCT - 2023	ORIGINAL VERSION

STANDARD PLANS

WESTERN CAPE GOVERNMENT
DEPARTMENT OF INFRASTRUCTURE
TRANSPORT INFRASTRUCTURE BRANCH

CONTRACT NAME BOARDS

CONTRACT NAME BOARD-AFRIKAANS

SCALE : N.T.S.

A2 ORIGINAL

INDEX NO. WCS/13/1/C2

PLAN NO. SHEET 2 OF 7

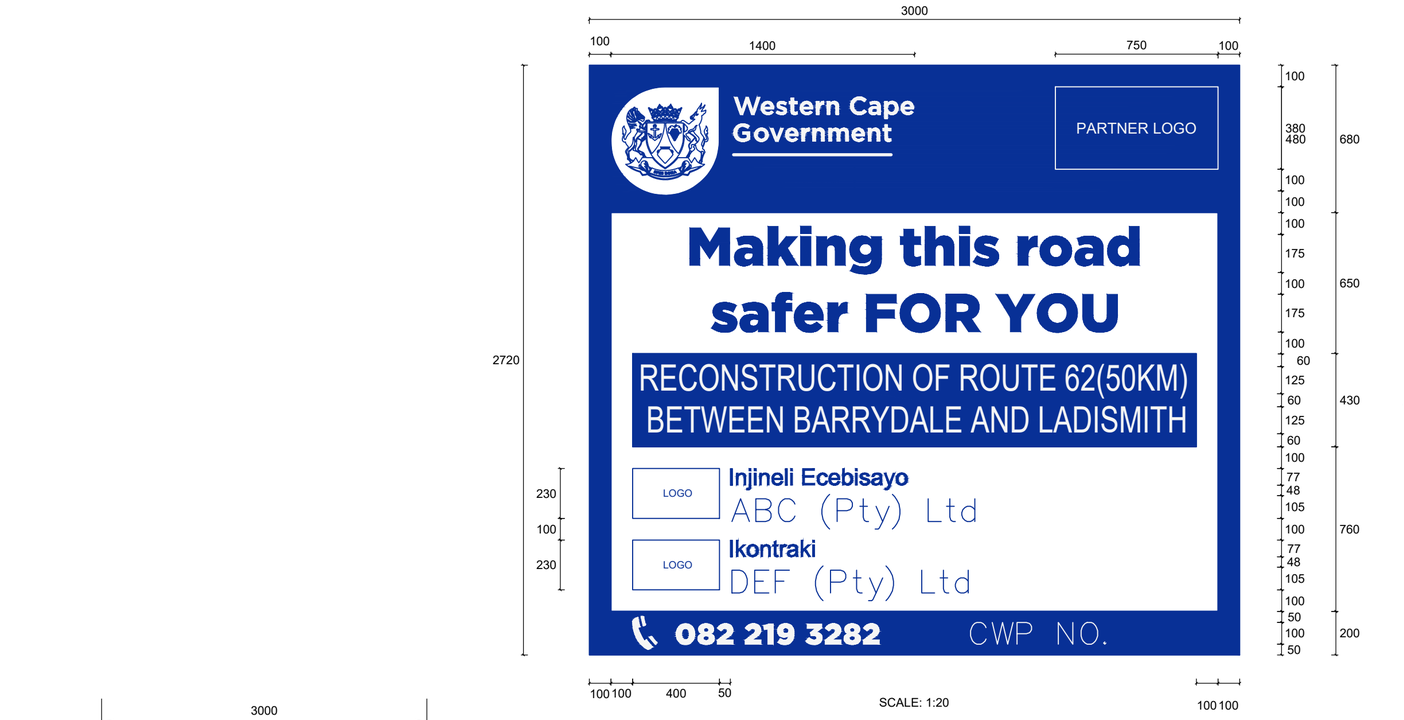

SCALE: 1:20

NOTES :

1. ALL EMBLEMS TO BE DISPLAYED IN FULL COLOURS.
2. COLOUR
   (a) WHITE : MATT WHITE
   (b) BLUE : PANTONE 280C CMYK: C100; M69; Y0; K11
3. TWO NAMEBOARDS PER CONTRACT, SHALL BE ERECTED AT APPROACHES TO THE CONTRACT AS DIRECTED AND APPROVED BY THE ENGINEER. A MINIMUM DISTANCE (m) EQUAL TO THE OPERATING SPEED AWAY FROM ANY ROAD SIGN.
4. REFER TO WCS/56/1/D1- D2 AND WCS/56/1/C2- C5 FOR DETAIL OF SUPPORT STRUCTURE.
5. DESCRIPTION OF PROJECT.
   EXAMPLE :
   RECONSTRUCTION OF ROUTE 62 (50KM) BETWEEN BARRYDALE AND LADISMITH
   WITH APPROVAL, SIGN WIDTH MAY BE INCREASED TO SUIT TEXT.
6. CONTRACT CONTACT NUMBER : RESIDENT ENGINEER'S OFFICE

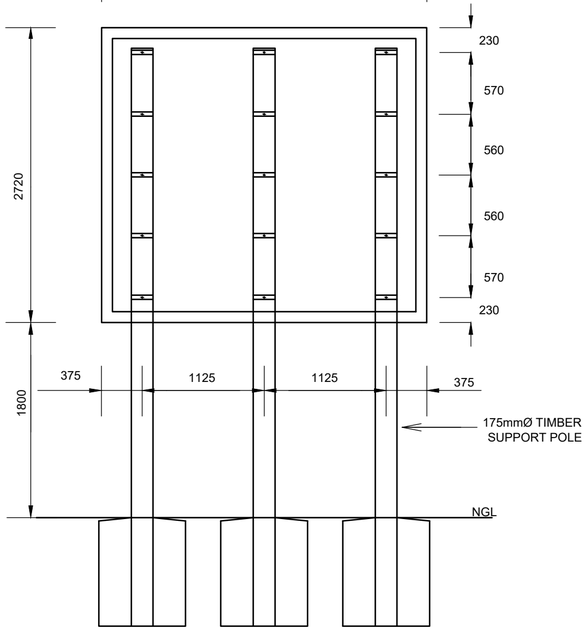

POSITIONING OF SUPPORTS

SCALE: 1:40

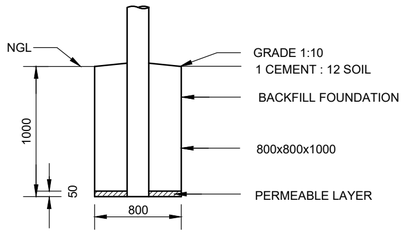

FOOTING DETAIL

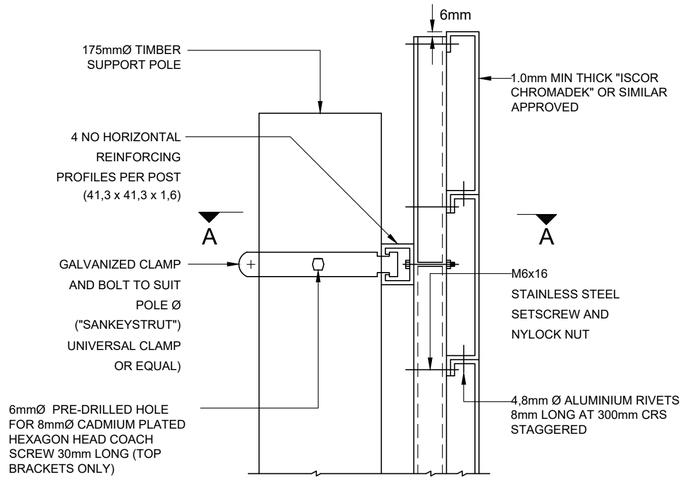

FIXING DETAIL

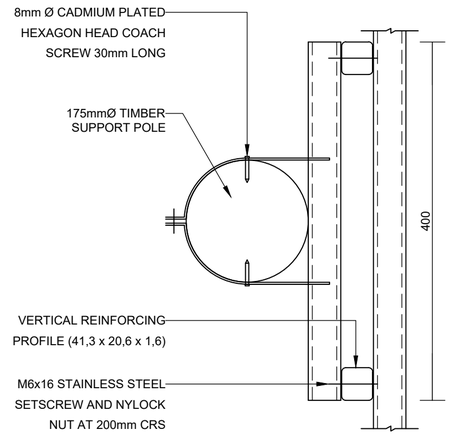

SECTION A-A

No.	DATE	ADDITIONS AND AMENDMENTS
0	OCT - 2023	ORIGINAL VERSION

STANDARD PLANS

WESTERN CAPE GOVERNMENT
DEPARTMENT OF INFRASTRUCTURE
TRANSPORT INFRASTRUCTURE BRANCH

CONTRACT NAME BOARDS

CONTRACT NAME BOARD-XHOSA

SCALE : N.T.S.

A2 ORIGINAL

INDEX NO. WCS/13/1/C3

PLAN NO. SHEET 3 OF 7



SCALE: 1:20

NOTES :

1. ALL EMBLEMS TO BE DISPLAYED IN FULL COLOURS.
2. COLOUR
   (a) WHITE : MATT WHITE
   (b) BLUE : PANTONE 280C CMYK: C100; M69; Y0; K11
3. TWO NAMEBOARDS PER CONTRACT, SHALL BE ERECTED AT APPROACHES TO THE CONTRACT AS DIRECTED AND APPROVED BY THE ENGINEER. A MINIMUM DISTANCE (m) EQUAL TO THE OPERATING SPEED AWAY FROM ANY ROAD SIGN.
4. REFER TO WCS/56/1/D1- D2 AND WCS/56/1/C2- C5 FOR DETAIL OF SUPPORT STRUCTURE.
5. DESCRIPTION OF PROJECT.
   EXAMPLE :
   RECONSTRUCTION OF ROUTE 62 (50KM) BETWEEN BARRYDALE AND LADISMITH
   WITH APPROVAL, SIGN WIDTH MAY BE INCREASED TO SUIT TEXT.
6. CONTRACT CONTACT NUMBER : RESIDENT ENGINEER'S OFFICE

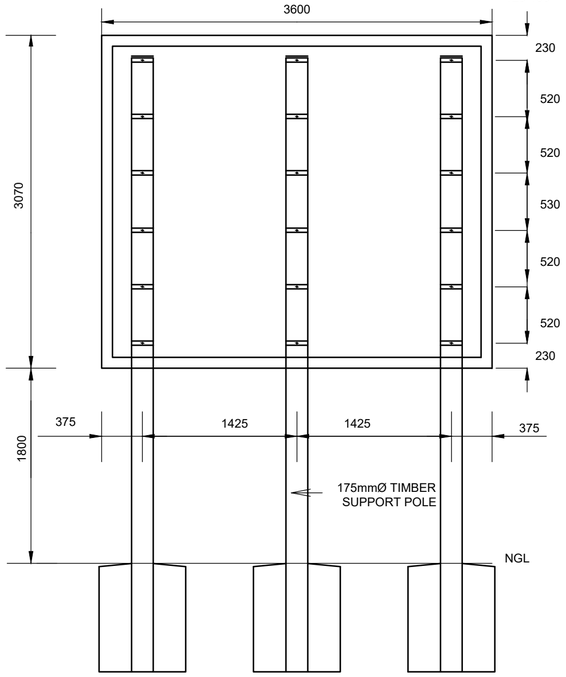

POSITIONING OF SUPPORTS

SCALE: 1:40

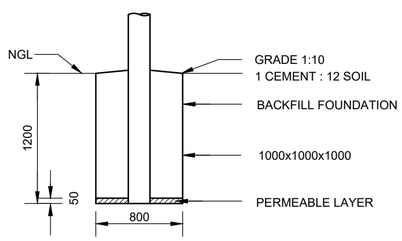

FOOTING DETAIL

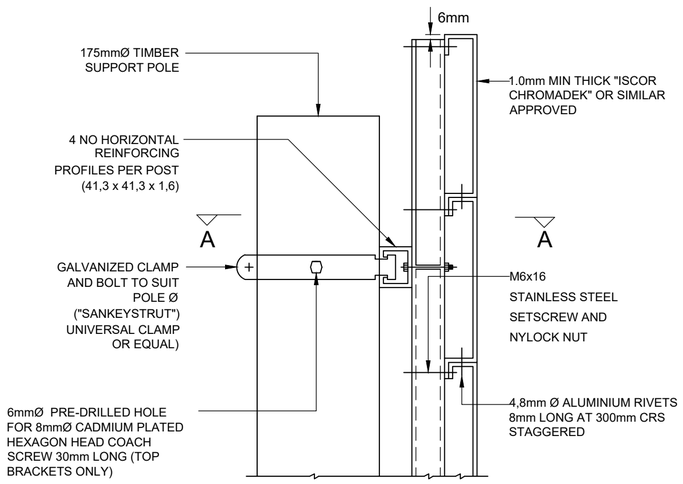

FIXING DETAIL

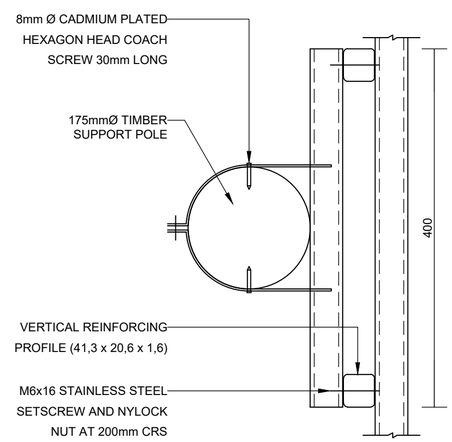

SECTION A-A

No.	DATE	ADDITIONS AND AMENDMENTS
0	OCT - 2023	ORIGINAL VERSION

STANDARD PLANS

WESTERN CAPE GOVERNMENT
DEPARTMENT OF INFRASTRUCTURE
TRANSPORT INFRASTRUCTURE BRANCH

CONTRACT NAME BOARDS

CONTRACT NAME BOARD-HIGHER ORDERS ROADS

SCALE : N.T.S.

A2 ORIGINAL

INDEX NO. WCS/13/1/C4

PLAN NO. SHEET 4 OF 7



90-120km/h



60-80km/h

NOTES :

1. ALL EMBLEMS TO BE DISPLAYED IN FULL COLOURS.
2. COLOUR
   2.1. WHITE : MATT WHITE
   2.2. BLUE : PANTONE 280C CMYK: C100; M69; Y0; K11
3. TWO NAMEBOARDS PER CONTRACT, SHALL BE ERECTED AT APPROACHES TO THE CONTRACT AS DIRECTED AND APPROVED BY THE ENGINEER. A MINIMUM DISTANCE (m) EQUAL TO THE OPERATING SPEED AWAY FROM ANY ROAD SIGN.
4. REFER TO WCS/56/1/D1- D2 AND WCS/56/1/C2- C5 FOR DETAIL OF SUPPORT STRUCTURE.
5. CONTRACT CONTACT NUMBER : RESIDENT ENGINEER'S OFFICE

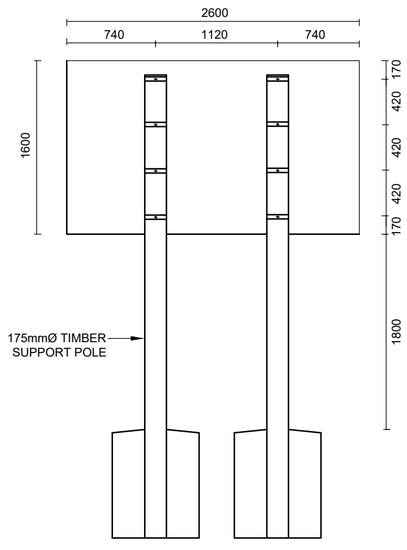

POSITIONING OF SUPPORTS

SCALE: 1:40

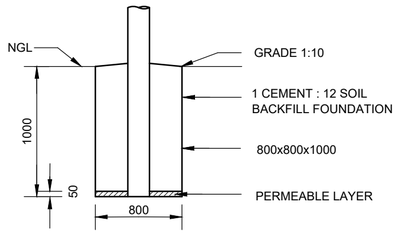

FOOTING DETAIL

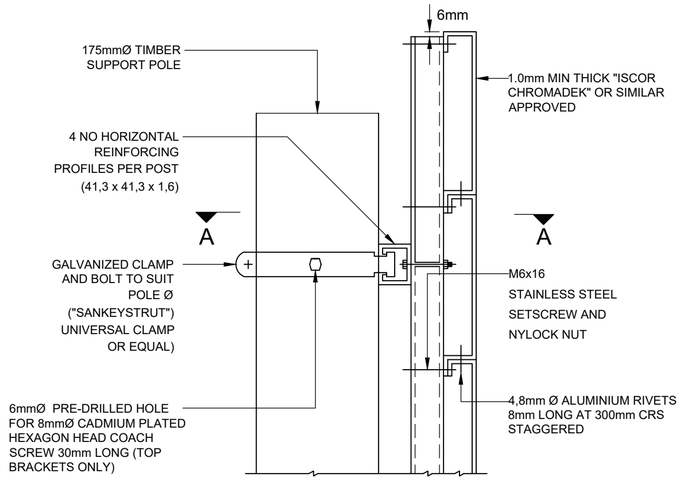

FIXING DETAIL

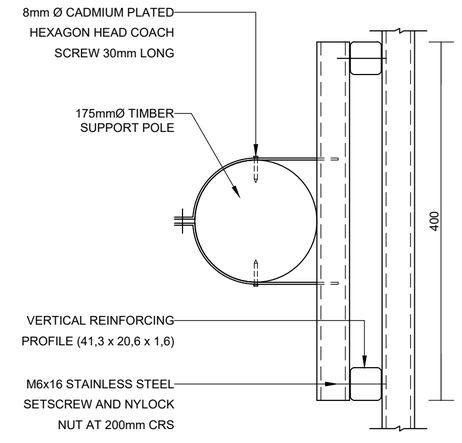

SECTION A-A

No.	DATE	ADDITIONS AND AMENDMENTS
0	OCT - 2023	ORIGINAL VERSION

STANDARD PLANS

WESTERN CAPE GOVERNMENT
DEPARTMENT OF INFRASTRUCTURE
TRANSPORT INFRASTRUCTURE BRANCH

CONTRACT NAME BOARDS

ROUTINE ROAD MAINTENANCE CONTRACT NAME BOARD

SCALE : N.T.S.

A2 ORIGINAL

INDEX NO. WCS/13/1/C5

PLAN NO. SHEET 5 OF 7



SCALE: 1:20

NOTES :

1. ALL EMBLEMS TO BE DISPLAYED IN FULL COLOURS.
2. COLOUR
   (a) WHITE : MATT WHITE
   (b) BLUE : PANTONE 280C CMYK: C100; M69; Y0; K11
3. TWO NAMEBOARDS PER CONTRACT, SHALL BE ERECTED AT APPROACHES TO THE CONTRACT AS DIRECTED AND APPROVED BY THE ENGINEER. A MINIMUM DISTANCE (m) EQUAL TO THE OPERATING SPEED AWAY FROM ANY ROAD SIGN.
4. REFER TO WCS/56/1/D1- D2 AND WCS/56/1/C2- C5 FOR DETAIL OF SUPPORT STRUCTURE.
5. DESCRIPTION OF PROJECT.
   EXAMPLE :
   RECONSTRUCTION OF ROUTE 62 (50KM) BETWEEN BARRYDALE AND LADISMITH
   WITH APPROVAL, SIGN WIDTH MAY BE INCREASED TO SUIT TEXT.
6. CONTRACT CONTACT NUMBER : RESIDENT ENGINEER'S OFFICE

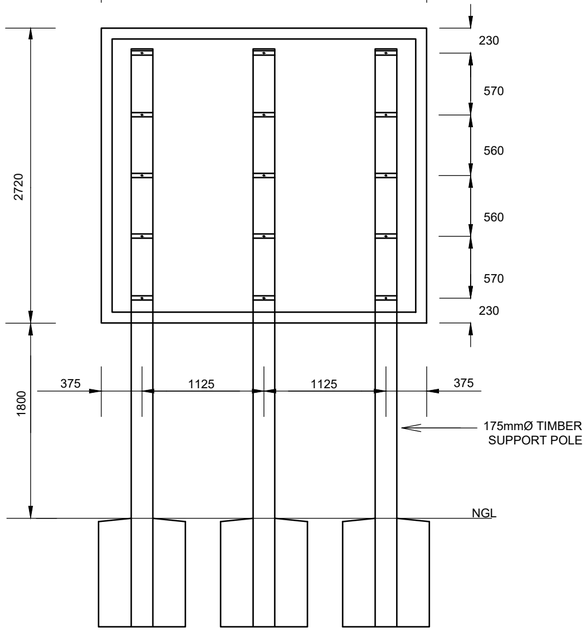

POSITIONING OF SUPPORTS
SCALE: 1:40

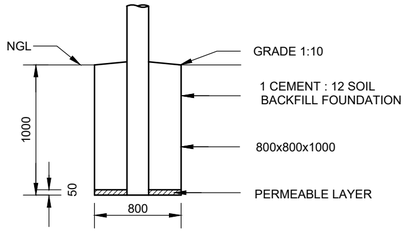

FOOTING DETAIL

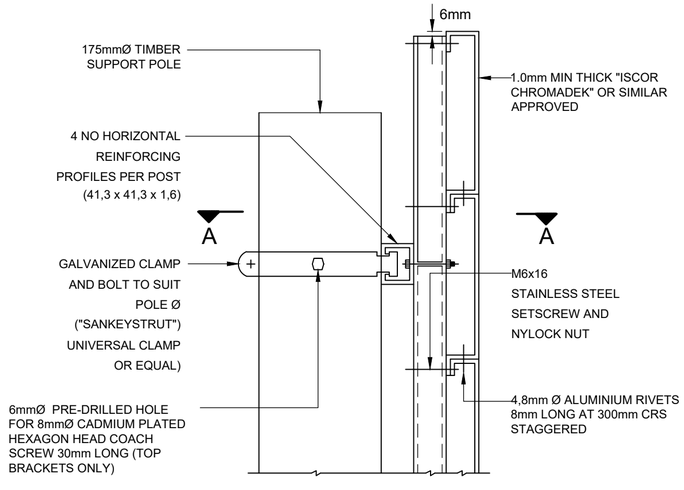

FIXING DETAIL

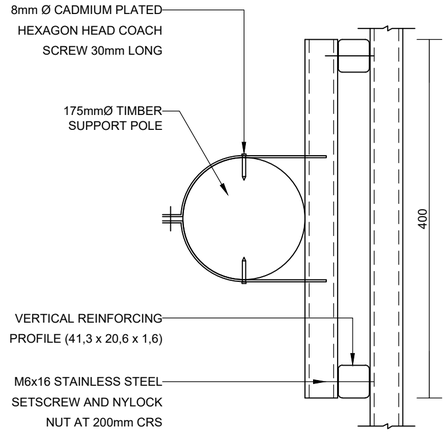

SECTION A-A

No.	DATE	ADDITIONS AND AMENDMENTS
0	OCT - 2023	ORIGINAL VERSION

STANDARD PLANS

WESTERN CAPE GOVERNMENT
DEPARTMENT OF INFRASTRUCTURE
TRANSPORT INFRASTRUCTURE BRANCH

CONTRACT NAME BOARDS

CONTRACT NAME BOARD-EPWP PRO-FORMA

SCALE : N.T.S.

A2 ORIGINAL

INDEX NO. WCS/13/1/C6

PLAN NO. SHEET 6 OF 7



SCALE: 1:20

NOTES :

1. ALL EMBLEMS TO BE DISPLAYED IN FULL COLOURS.
2. COLOUR
   (a) WHITE : MATT WHITE
   (b) BLUE : PANTONE 280C CMYK: C100; M69; Y0; K11
3. TWO NAMEBOARDS PER CONTRACT, SHALL BE ERECTED AT APPROACHES TO THE CONTRACT AS DIRECTED AND APPROVED BY THE ENGINEER. A MINIMUM DISTANCE (m) EQUAL TO THE OPERATING SPEED AWAY FROM ANY ROAD SIGN.
4. REFER TO WCS/56/1/D1- D2 AND WCS/56/1/C2- C5 FOR DETAIL OF SUPPORT STRUCTURE.
5. DESCRIPTION OF PROJECT.
   EXAMPLE :
   RECONSTRUCTION OF ROUTE 62 (50KM) BETWEEN BARRYDALE AND LADISMITH
   WITH APPROVAL, SIGN WIDTH MAY BE INCREASED TO SUIT TEXT.
6. CONTRACT CONTACT NUMBER : RESIDENT ENGINEER'S OFFICE

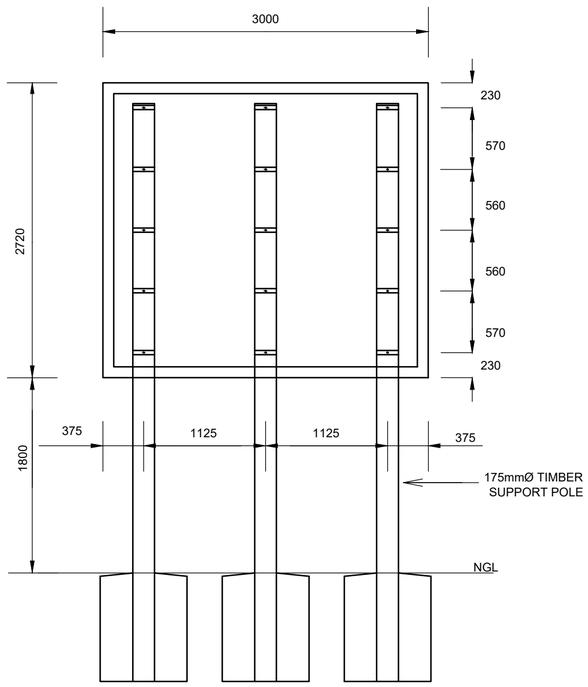

POSITIONING OF SUPPORTS

SCALE: 1:40

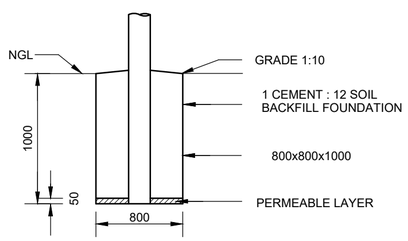

FOOTING DETAIL

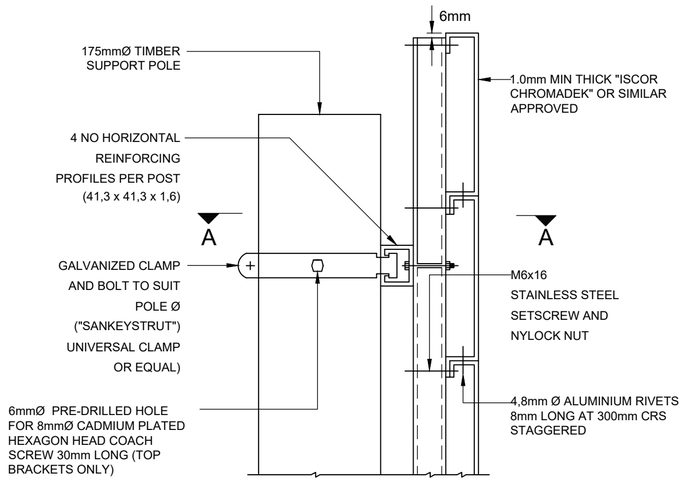

FIXING DETAIL

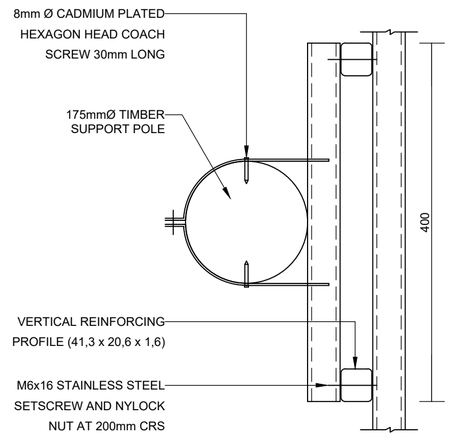

SECTION A-A

No.	DATE	ADDITIONS AND AMENDMENTS
0	OCT - 2023	ORIGINAL VERSION

STANDARD PLANS

WESTERN CAPE GOVERNMENT
DEPARTMENT OF INFRASTRUCTURE
TRANSPORT INFRASTRUCTURE BRANCH

CONTRACT NAME BOARDS

CONTRACT NAME BOARD-S'HAMBA SONKE

SCALE : N.T.S.

A2 ORIGINAL

INDEX NO. WCS/13/1/C7

PLAN NO. SHEET 7 OF 7

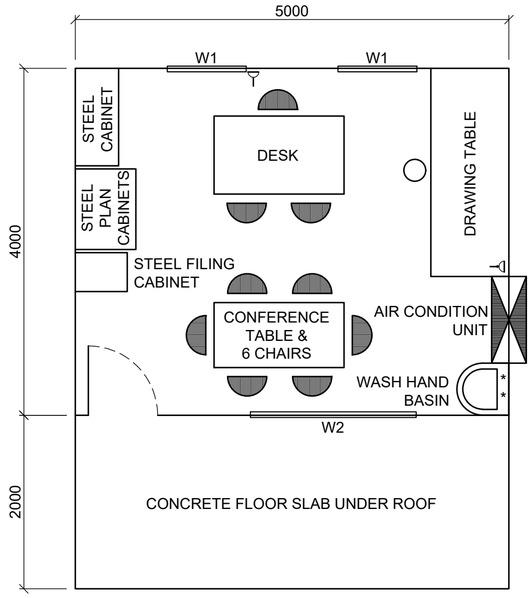

SITE OFFICE

NOTES FOR SITE OFFICE :

1. 15 A PLUG POINTS ARE INDICATED BY : "Ŧ".
2. WINDOW DETAIL :
   W1 : 910mm x 1520mm STEEL WINDOW FRAME.
   W2 : 1910mm x 1520mm STEEL WINDOW FRAME.
   W3 : 654mm x 1220mm STEEL WINDOW FRAME.
3. SITE OFFICE TYPE 1 : SHALL BE PROVIDED WITH THE FOLLOWING :
- 3.1 AN OFFICE DESK WITH A SURFACE AREA OF AT LEAST 1,5m² WITH SIX DRAWERS, TWO OF WHICH CAN BE LOCKED.
- 3.2 ONE STEEL GENERAL-PURPOSE CABINET WITH SHELF AREA OF AT LEAST 1,5m² AND A VOLUME OF 0,7m². THE CABINET SHALL HAVE A LOCK WITH TWO KEYS.
- 3.3 ONE STEEL FILING CABINET WITH FOUR DRAWERS, A LOCK WITH TWO KEYS. THE CABINET SHALL BE 1300mm HIGH, 480mm WIDE AND 600mm FROM FRONT TO BACK.
- 3.4 ONE DRAWING TABLE WITH A SMOOTH TOP OF AT LEAST 2400mm x 900mm, AND THE UPPER SURFACE SHALL BE 950mm ABOVE FLOOR LEVEL.
- 3.5 SHELVING AS SPECIFIED BY THE ENGINEER.
- 3.6 THREE STURDY AND COMFORTABLE CHAIRS.
- 3.7 ONE HEIGHT-ADJUSTABLE DRAUGHTMAN'S STOOL WITH PADDED SEAT AND BACKREST.
- 3.8 ONE WASH HAND BASIN.
- 3.9 ONE AIR CONDITION UNIT AND ONE HEATER
- 3.10 ALL THE NECESSARY POWER POINTS, LIGHTS, TAPS, DRAINS,. SEWERAGE AND HOT AND COLD WATER SUPPLY.
- 3.11 ONE CONFERENCE TABLE (APPR. 3,2m x 1,25m) AND 6 CHAIRS
- 3.12 TWO STEEL PLAN CABINETS A0-SIZE (6 DRAWERS EACH)

4. SITE OFFICE TYPE 2 : SHALL BE PROVIDED WITH THE FOLLOWING :
- 4.1 OFFICE DESK AS FOR OFFICE TYPE 1.
- 4.2 ONE GENERAL PURPOSE STEEL CABINET AS FOR OFFICE TYPE 1.
- 4.3 SHELVING AS SPECIFIED BY THE ENGINEER.
- 4.4 TWO STURDY AND COMFORTABLE CHAIRS.
- 4.5 ONE DRAUGHTMAN'S STOOL AS FOR OFFICE TYPE 1.
- 4.6 ONE WASH HAND BASIN.
- 4.7 ONE AIR CONDITIONING UNIT.
- 4.8 ALL THE NECESSARY POWER POINTS, LIGHTS, TAPS, DRAINS, SEWERAGE AND HOT AND COLD WATER SUPPLY.

5. ABLUTION UNIT :
- 5.1 THE W.C. SHALL BE PROVIDED WITH ONE GLASS ENAMEL WATER CLOSET SYSTEM WITH P.V.C. SEAT AND LID EACH, AND SHALL BE WELL VENTILATED.
- 5.2 THE OTHER PART SHALL BE PROVIDED WITH ONE SHOWER AND ONE GLASS ENAMEL WASH HAND BASIN.
- 5.3 ALL THE NECESSARY TAPS, HOT AND COLD WATER SUPPLY AND SUFFICIENT LIGHTING.

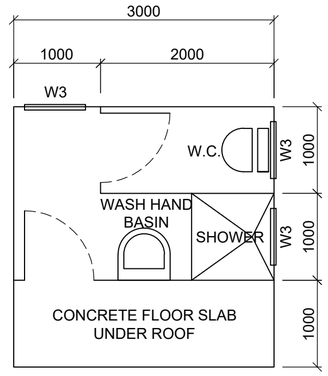

SITE ABLUTION UNIT

SITE OFFICE AREAS:

SITE OFFICE		: 20m² EACH
ABLUTION UNIT		: 6m²
CONCRETE FLOOR SLABS :	(i) SITE OFFICE	: 10m²
	(ii) ABLUTION UNIT	: 3m²

LEGEND :

- LW - LABORATORY BASIN-TROUGH TYPE
- SC - STEEL CABINET
- WB - WASH HAND BASIN
- - SHELVES BELOW WORKBENCHES
- - AIR CONDITION UNIT
- - EXTRACTOR FAN
- - PLUG POINTS

NOTES FOR SITE LABORATORY :

1. 15 A PLUG POINTS ARE INDICATED BY: "Ŧ".
2. ALL WORK BENCHES SHALL BE OF CONCRETE AND THE UPPER SURFACE SHALL BE 920mm ABOVE FLOOR LEVEL.
3. ALL WORK BENCHES SHALL BE PROVIDED WITH SHELVES 390mm ABOVE FLOOR LEVEL.
4. ALL WASH BASINS SHALL BE PROVIDED WITH SWAN-NECK TYPE LABORATORY TAPS AND DRAIN PIPES.
5. ALL FLOORS SHALL BE CONCRETE FLOORS.
6. POWER POINTS IN OVEN ROOMS SHALL BE 1500mm ABOVE FLOOR LEVEL.
7. ALL THE ITEMS (3.1 TO 3.10) AS SPECIFIED FOR THE SITE OFFICE.
8. WINDOW DETAIL:
   W1 : 910mm x 1520mm STEEL WINDOW FRAMES
   W2 : 1910mm x 1520mm STEEL WINDOW FRAMES
- 8.1 STORE ROOM:
   TO BE PROVIDED WITH A LOCKABLE DOOR TO STORE NUCLEAR GAUGE AS WELL AS ADDITIONAL EQUIPMENT.

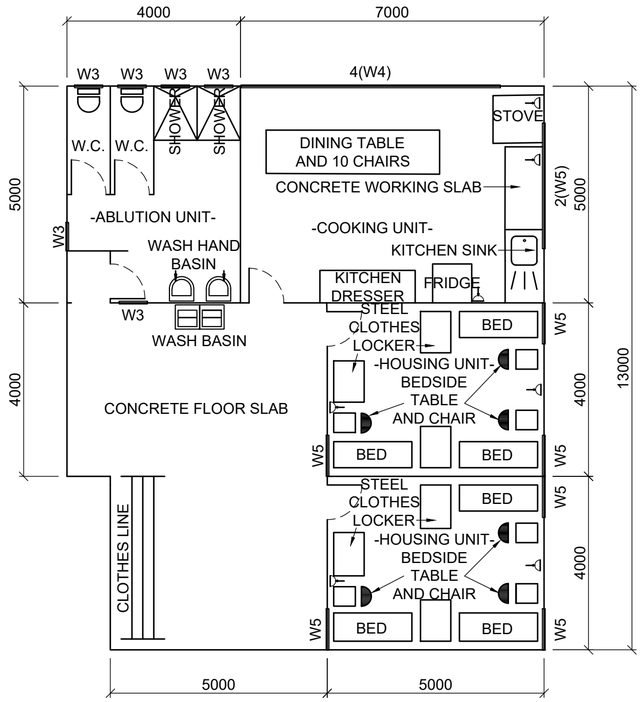

DETAIL OF HOUSING UNIT

NOTES FOR HOUSING UNIT :

1. 15 A PLUG POINTS ARE INDICATED BY: "Ŧ".
2. COOKING UNIT: SHALL BE PROVIDED WITH THE FOLLOWING :
- 2.1 DINING TABLE WITH "FORMICA" OR SIMILAR APPROVED TOP AND AREA OF AT LEAST 4m².
- 2.2 TEN APPROVED CHAIRS.
- 2.3 ONE 210l FRIDGE.
- 2.4 ONE APPROVED FOUR PLATE STOVE COMPLETE WITH AN OVEN.
- 2.5 ONE APPROVED STAINLESS STEEL DUST BIN.
- 2.6 KITCHEN DRESSERS OF 2m² WITH SHELVES AND "FORMICA" ON TOP.
- 2.7 SINGLE KITCHEN SINK AND AT LEAST 1m² OF CONCRETE WORKING SLAB.
- 2.8 ALL THE NECESSARY POWER POINTS, SUFFICIENT LIGHTING, TAPS, DRAINS, SEWERAGE, AND HOT AND COLD WATER SUPPLY.

3. ABLUTION UNIT :
   ALL EQUIPMENT AS PROVIDED FOR SITE ABLUTION UNIT.
4. HOUSING UNIT :
- 4.1 THREE STURDY BEDSTEADS, WITH NEW MATTRESSES OF ACCEPTABLE QUALITY.
- 4.2 THREE STEEL CLOTHES-LOCKERS NOT LESS THAN 0,7m² EACH IN SIZE WITH HANGING AND SHELF SPACE WHICH CAN BE LOCKED.
- 4.3 THREE BEDSIDE TABLES NOT LESS THAN 0,75m² EACH IN SIZE WITH TWO CHAIRS.
- 4.4 SUFFICIENT HEATING FACILITIES.

5. WINDOW DETAIL :
   W3 : 654mm x 1220mm STEEL WINDOW FRAMES
   W4 : 1245mm x 1220mm STEEL WINDOW FRAMES
   W5 : 949mm x 1270mm STEEL WINDOW FRAMES

HOUSING UNIT AREAS:

HOUSING UNIT	: 20m² EACH
COOKING UNIT	: 35m²
ABLUTION UNIT	: 20m²
CONCRETE FLOOR SLAB	: 64m²

SITE LABORATORY AREAS:

LABORATORY	: 78m²
OFFICE	: 12m²
CONCRETE FLOOR SLAB	: 55,5m²
STORE ROOM	: 16m²

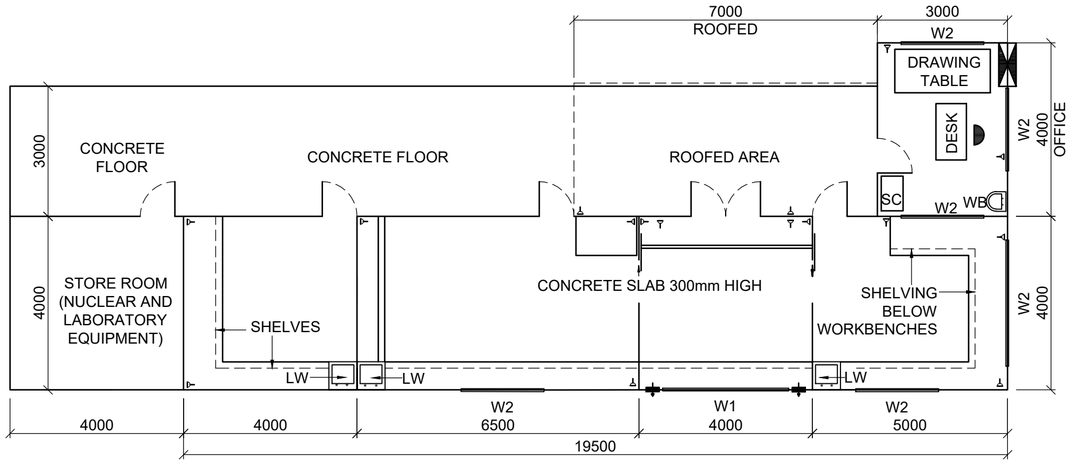

DETAIL OF SITE LABORATORY

No.	DATE	ADDITIONS AND AMENDMENTS
0	OCT - 2023	ORIGINAL VERSION

STANDARD PLANS

WESTERN CAPE GOVERNMENT
DEPARTMENT OF INFRASTRUCTURE
TRANSPORT INFRASTRUCTURE BRANCH

HOUSING, OFFICES AND LABORATORIES FOR THE ENGINEER'S SITE PERSONNEL

TYPICAL DETAILS

SCALE : N.T.S.

A2 ORIGINAL

INDEX NO.
WCS/14/1/C1

PLAN NO.
SHEET 1 OF 1

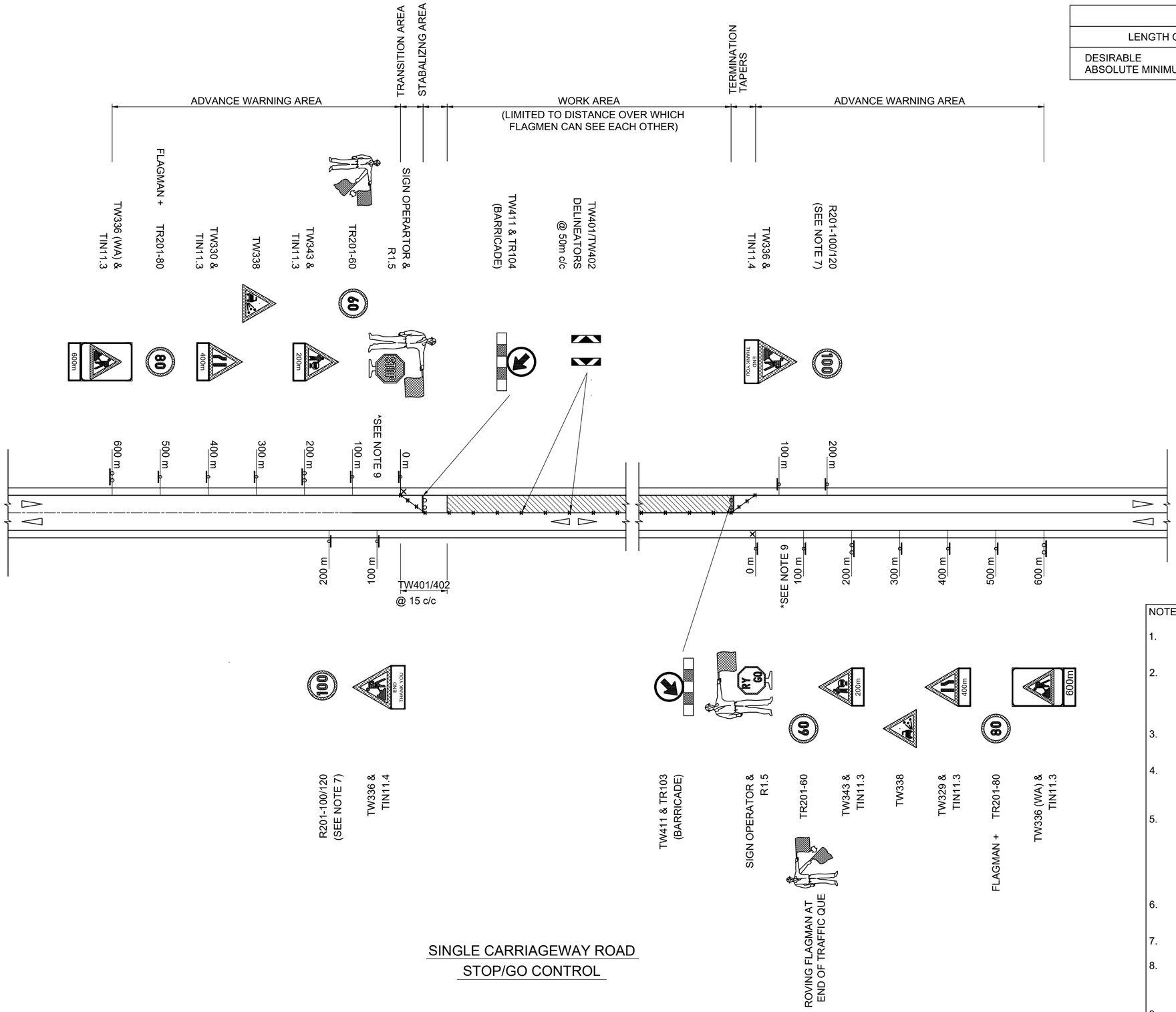

SINGLE CARRIAGEWAY ROAD
STOP/GO CONTROL

TABLE 3
LENGTH OF STABILIZING AREA
DESIRABLE 150m - 200m
ABSOLUTE MINIMUM 50m

TABLE 1	
ADVANCE WARNING AREA	
APPROACH SPEED	LENGTH
PRIMARY ADVANCE WARNING AREA (1)	
100-120km/h	1000m
60-80km/h	600m
URBAN	150-300m
SECONDARY ADVANCE WARNING AREA (2)	
60-80km/h	400-600m
< 60km/h	200-400m

NOTES:
1. APPLICABLE TO THE ONLY OR FIRST OF A SERIES OF ROADWORKS AREA AND IS INTENDED TO ADVISE THE MOTORIST OF CONDITIONS AHEAD REQUIRING PARTICULAR CARE
2. APPLICABLE TO SUBSEQUENT ROADWORKS AREAS OR TRANSITIONS WITHIN A CONSTRUCTION ZONE REQUIRING EXTRA CARE

TABLE 2			
TRANSITION AREA			
APPROACH SPEED	TAPER RATE	TAPER LENGTH	DELINEATOR SPACING
TRANSITION TAPERS			
120km/h	1 in 50	200m	15m
80km/h	1 in 40	160m	15m
60km/h	1 in 30	120m	10m
40km/h	1 in 20	80m	5m
< 40km/h	1 in 10	40m	5m
TERMINATION TAPERS			
RURAL	1 in 10	40m-50m	15m
URBAN	1 in 5	20m	5m

NOTES:
1. TAPER LENGTH DEPENDS ON THE AMOUNT OF SHIFT IN THE ALIGNMENT; LENGTHS SHOWN HERE APPLY TO A SHIFT OF 4m.

NOTES:

1. TEMPORARY ROAD SIGN LAYOUTS SHOWN HERE DEPICTS THE ACCOMMODATION OF TRAFFIC ON THE TYPICAL SECTION OF SINGLE CARRIAGEWAY ROADS UNDER HALF WIDTH CONSTRUCTION CONDITIONS.
2. ACTUAL ACCOMMODATION OF TRAFFIC PROPOSALS TO BE USED ON THE WORKS SHALL BE SUBMITTED TIMEOUSLY FOR THE ENGINEER'S APPROVAL. SUCH PROPOSALS SHALL TAKE DUE CONSIDERATION OF ACTUAL CONDITIONS ON THE ROAD PARTICULAR ATTENTION SHALL BE GIVEN TO ACCESSES AND INTERSECTING ROADS.
3. ALL TEMPORARY ROAD SIGNS SHALL COMPLY WITH THE SADC-RTSM LATEST EDITION. ALL ACCOMMODATION OF TRAFFIC PROPOSALS SHALL BE PREPARED TO THE GUIDELINES SET IN CHAPTER 13 OF THE SARTSM.
4. ALL ROAD WORK DELINEATOR SIGNS (TW401 AND TW402) SHALL BE MANUFACTURED FROM A FLEXIBLE MATERIAL AND SHOULD COMPLY WITH SABS 1555 AND BE OF A 200mm x 800mm NOMINAL SIZE WITH CLASS I RETROREFLECTIVE MATERIAL ON THE BLADE FACING THE ONCOMING TRAFFIC.
5. MINIMUM SIZES OF SIGNS :
   TRIANGULAR : 1500mm SIDE LENGTH
   CIRCULAR : 1200mm DIAMETER
   RECTANGULAR : HIGH VISIBILITY BACKGROUND : 1800mm x 2400mm.
   DIAGRAMMATIC: 1800mm x 2400mm
   TIN11.X : 400mm HIGH, LENGTH TO FIT PRIMARY SIGN.
   TW411 : 400mm x 2400mm.
6. ROADWORK DELINEATOR SIGNS (TW401 AND TW402) SHOULD BE SO POSITIONED THAT ENCROACHMENT ON THE ADJACENT RUNNING LANE IS AVOIDED AS FAR AS POSSIBLE.
7. THE R201 SIGNS BEYOND THE WORK AREA SHALL AGREE WITH THE SPEED LIMIT ON THE SUBSEQUENT SECTION OF ROAD.
8. THE SPEED LIMIT IN THE WORK AREA SHALL BE SET AT A REALISTIC LEVEL. IN AREAS WHERE TRANSITION TAKES PLACE THE SPEED LIMIT COULD BE REDUCED LOCALLY, TO BE REVISED WHERE TRAFFIC FLOW CONDITIONS STABILIZED AT MORE UNIFORM LEVELS.
9. ROVING FLAGMEN 100m IN ADVANCE OF END OF VEHICLE QUEUE.
10. THIS MEANS OF TRAFFIC CONTROL SHOULD ONLY BE USED AT NIGHT WHEN APPROVED BY AN ENGINEER OR AND TRAFFIC OFFICIALS

No.	DATE	ADDITIONS AND AMENDMENTS
0	OCT - 2023	ORIGINAL VERSION

STANDARD PLANS

WESTERN CAPE GOVERNMENT
DEPARTMENT OF INFRASTRUCTURE
TRANSPORT INFRASTRUCTURE BRANCH

ACCOMMODATION OF TRAFFIC

SINGLE CARRIAGEWAY ROAD STOP/GO CONTROL

SCALE : N.T.S.

A2 ORIGINAL

INDEX NO.
WCS/15/1/D1

PLAN NO.
SHEET 1 OF 10

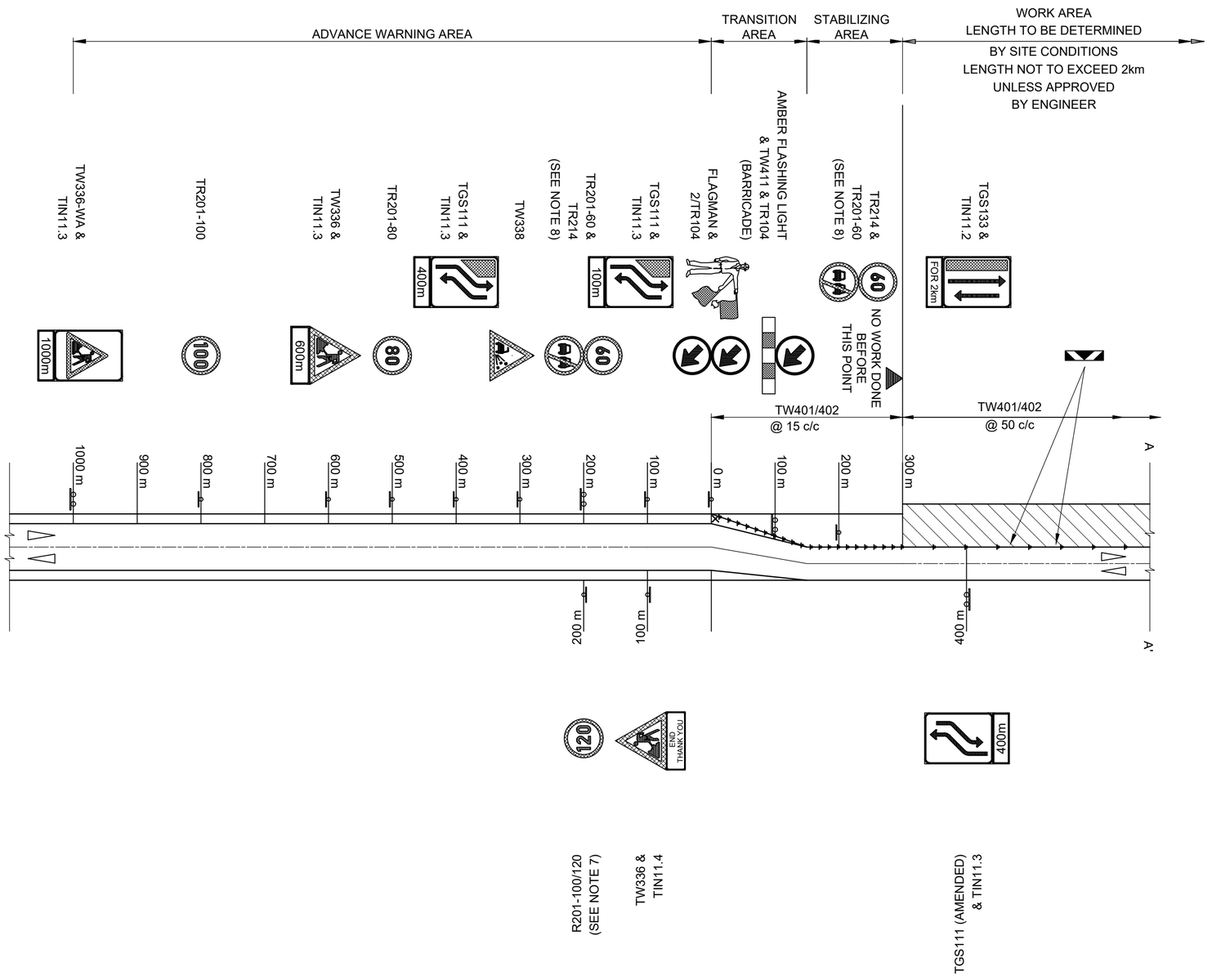

NOTES:

1. TEMPORARY ROAD SIGN LAYOUT SHOWN DEPICTS THE ACCOMMODATION OF TRAFFIC ON A TYPICAL SECTION OF SINGLE CARRIAGEWAY ROAD UNDER HALF WIDTH CONSTRUCTION CONDITIONS.
2. THIS DRAWING TO BE READ IN CONJUNCTION WITH DRAWING No. WCS/15/1/D1.

No.	DATE	ADDITIONS AND AMENDMENTS
0	OCT - 2023	ORIGINAL VERSION

STANDARD PLANS

WESTERN CAPE GOVERNMENT
DEPARTMENT OF INFRASTRUCTURE
TRANSPORT INFRASTRUCTURE BRANCH

ACCOMMODATION OF TRAFFIC

SINGLE CARRIAGEWAY ROAD PARTIAL ROADWAY CLOSURE - TWO WAY TRAFFIC

SCALE : N.T.S.

A2 ORIGINAL

INDEX NO. WCS/15/1/D2

PLAN NO. SHEET 2 OF 10

NOTES:

FOR IMPROVED CLARITY ONLY ONE CARRIAGEWAY IS SHOWN

1. TEMPORARY ROAD SIGN LAYOUTS SHOWN DEPICTS THE ACCOMMODATION OF TRAFFIC ON TYPICAL SECTIONS OF DUAL CARRIAGEWAY ROADS UNDER HALF WIDTH CONSTRUCTION CONDITIONS.
2. THIS DRAWING TO BE READ IN CONJUNCTION WITH DRAWING No WCS/15/1/D1.

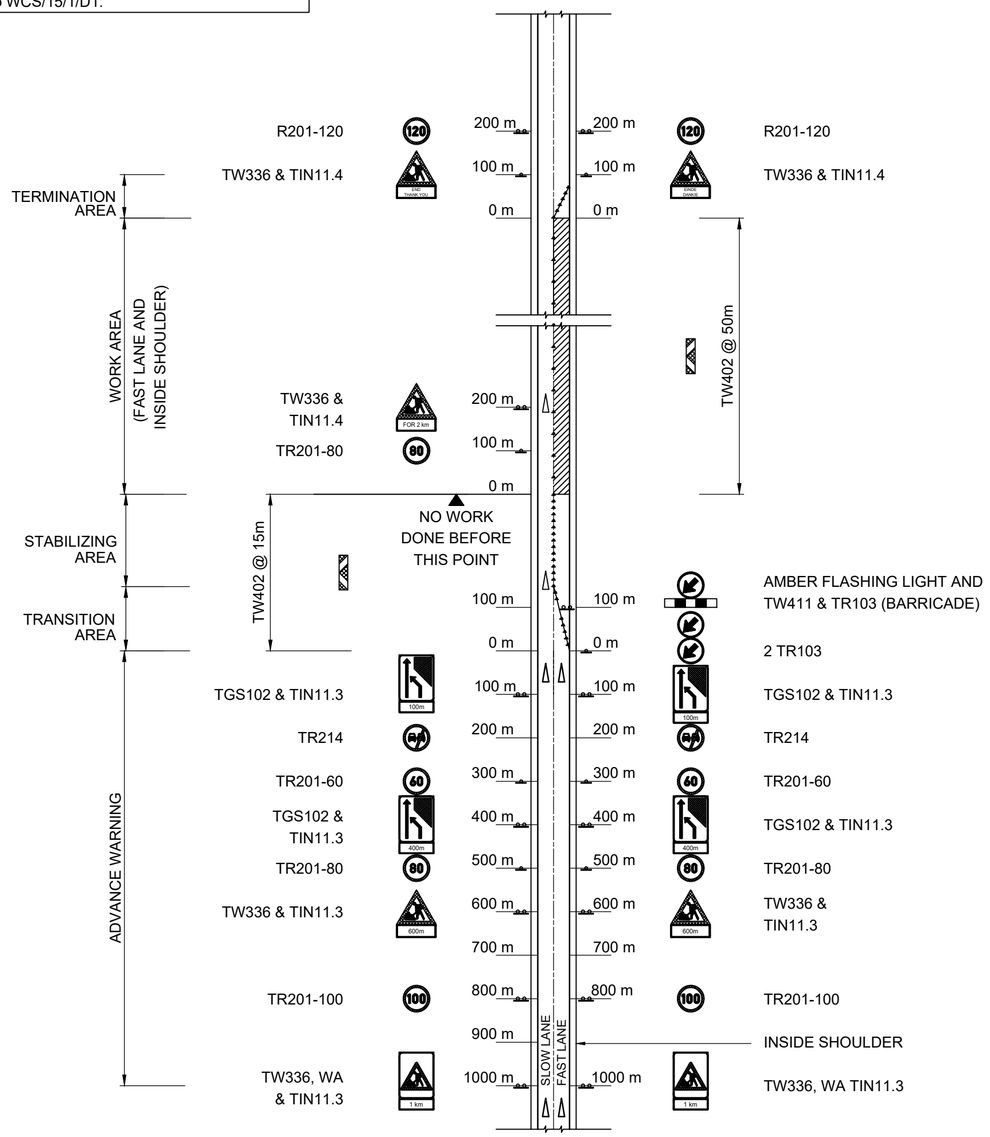

RIGHT LANE CLOSURE

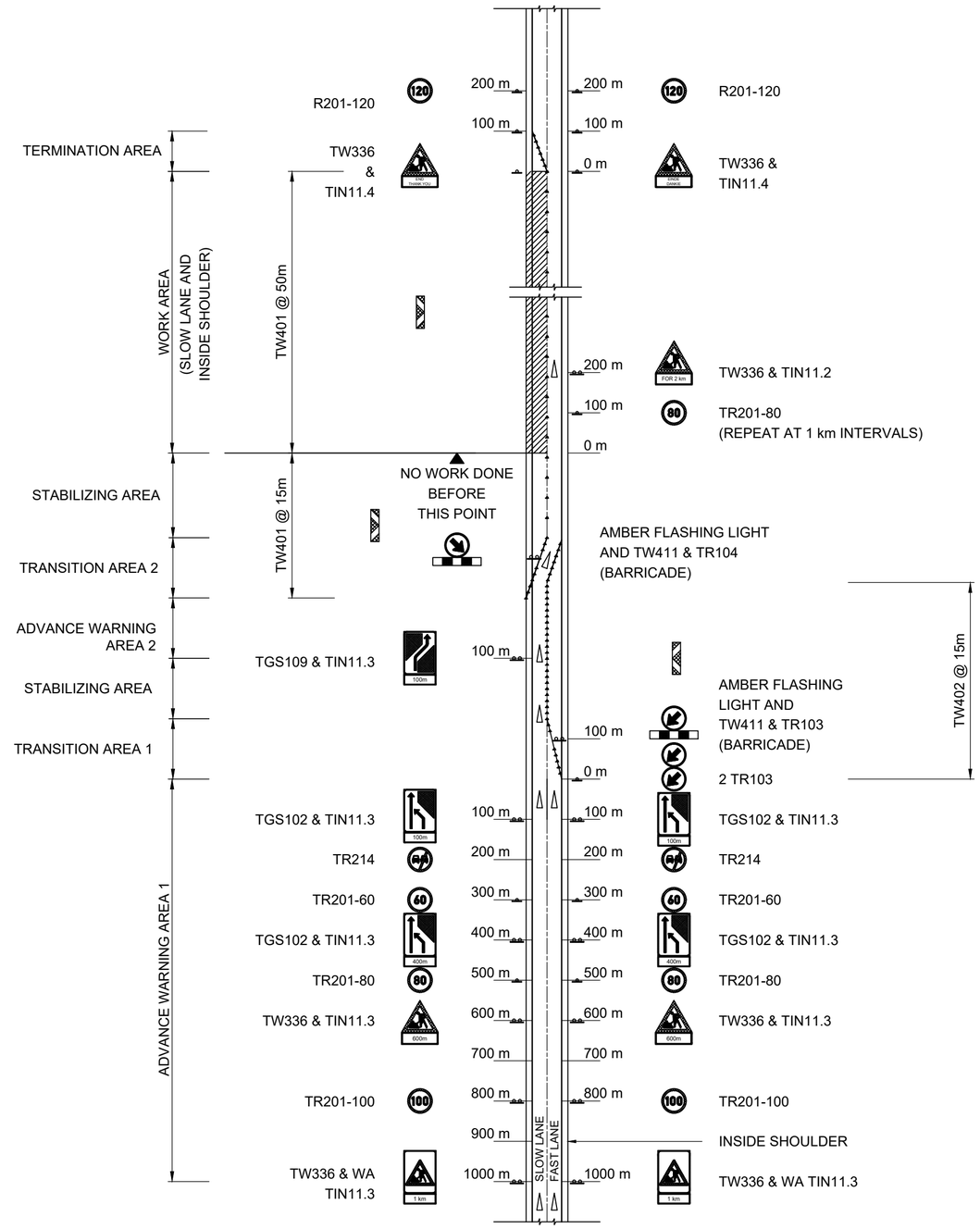

LEFT LANE CLOSURE

FOUR LANE DUAL CARRIAGEWAY - ONE LANE CLOSED

No.	DATE	ADDITIONS AND AMENDMENTS
0	OCT - 2023	ORIGINAL VERSION

STANDARD PLANS

WESTERN CAPE GOVERNMENT
DEPARTMENT OF INFRASTRUCTURE
TRANSPORT INFRASTRUCTURE BRANCH

ACCOMMODATION OF TRAFFIC

FOUR LANE DUAL CARRIAGEWAY ONE LANE CLOSED

SCALE : N.T.S.

A2 ORIGINAL

INDEX NO. WCS/15/1/D3

PLAN NO. SHEET 3 OF 10

NOTES:

FOR IMPROVED CLARITY ONLY ONE CARRIAGEWAY IS SHOWN

1. TEMPORARY ROAD SIGN LAYOUTS SHOWN DEPICTS THE ACCOMMODATION OF TRAFFIC ON TYPICAL SECTIONS OF DUAL CARRIAGEWAY ROADS UNDER HALF WIDTH CONSTRUCTION CONDITIONS.
2. THIS DRAWING TO BE READ IN CONJUNCTION WITH DRAWING No WCS/15/1/D1.

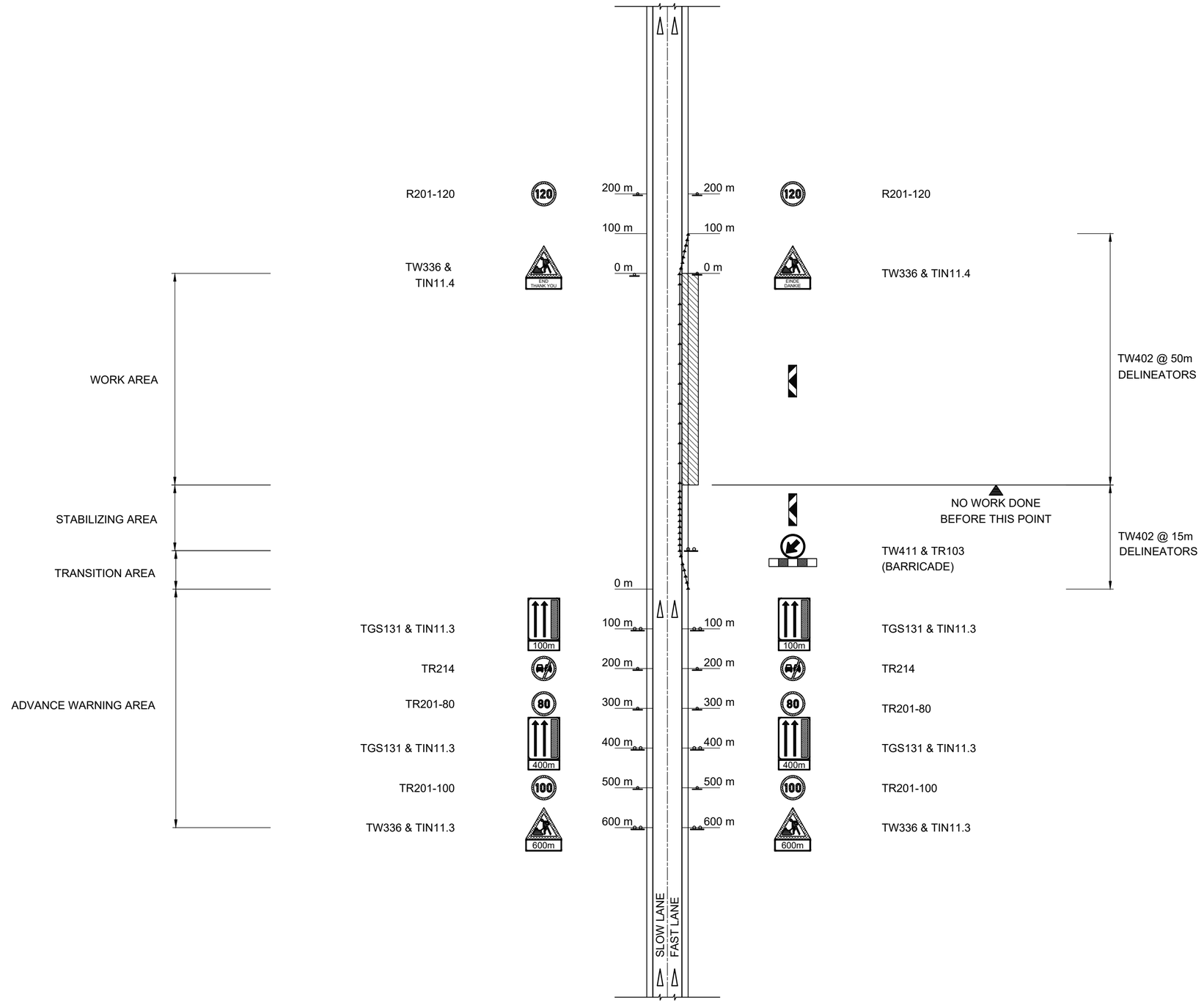

DUAL CARRIAGEWAY SHOULDER CLOSED

No.	DATE	ADDITIONS AND AMENDMENTS
0	OCT - 2023	ORIGINAL VERSION

STANDARD PLANS

WESTERN CAPE GOVERNMENT
DEPARTMENT OF INFRASTRUCTURE
TRANSPORT INFRASTRUCTURE BRANCH

ACCOMMODATION OF TRAFFIC

FOUR LANE DUAL CARRIAGEWAY SHOULDER CLOSED

SCALE : N.T.S.

A2 ORIGINAL

INDEX NO. WCS/15/1/D4

PLAN NO. SHEET 4 OF 10

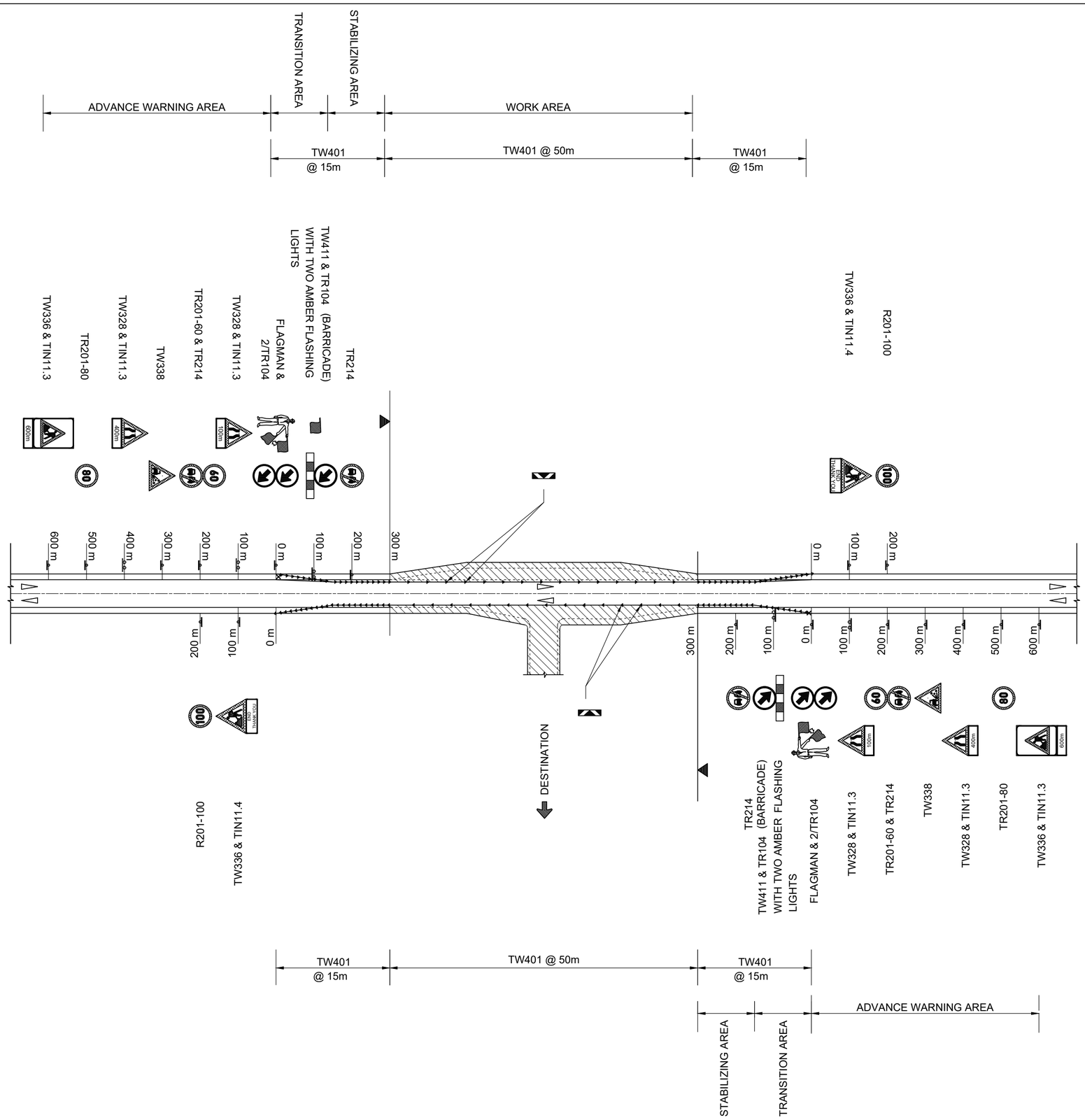

NOTES:

FOR IMPROVED CLARITY ONLY ONE CARRIAGEWAY IS SHOWN

1. TEMPORARY ROAD SIGN LAYOUTS SHOWN DEPICTS THE ACCOMMODATION OF TRAFFIC ON TYPICAL SECTIONS OF DUAL CARRIAGEWAY ROADS UNDER HALF WIDTH CONSTRUCTION CONDITIONS.

2. THIS DRAWING TO BE READ IN CONJUNCTION WITH DRAWING No WCS/15/1/D1.

No.	DATE	ADDITIONS AND AMENDMENTS
0	OCT - 2023	ORIGINAL VERSION

STANDARD PLANS

WESTERN CAPE GOVERNMENT
DEPARTMENT OF INFRASTRUCTURE
TRANSPORT INFRASTRUCTURE BRANCH

ACCOMMODATION OF TRAFFIC

TYPICAL ROAD SIGN LAYOUT FOR UPGRADING A T-INTERSECTION

SCALE : N.T.S.

A2 ORIGINAL

INDEX NO.
WCS/15/1/D5

PLAN NO.
SHEET 5 OF 10

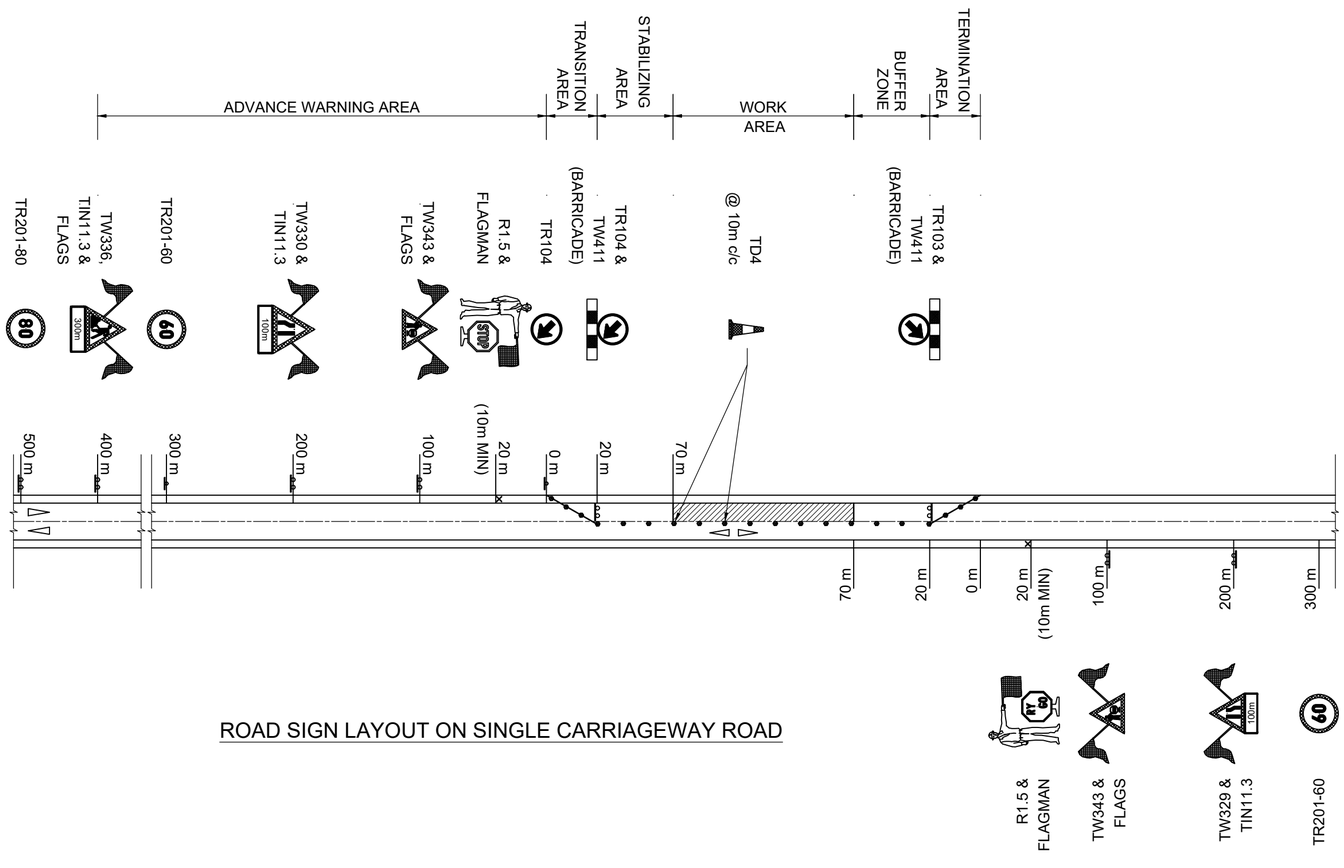

ROAD SIGN LAYOUT ON SINGLE CARRIAGEWAY ROAD

ROAD SIGN LAYOUT ON DUAL CARRIAGEWAY ROAD

NOTES

1. THE TEMPORARY ROAD SIGN LAYOUTS SHOWN HERE DEPICTS TYPICALLY THE ACCOMMODATION OF TRAFFIC FOR MATERIALS INVESTIGATION WORK WITHIN THE ROAD PRISM.
2. ACTUAL ACCOMMODATION OF TRAFFIC ON-SITE SHALL BE ADJUSTED TO TAKE DUE CONSIDERATION OF ACTUAL CONDITIONS ON THE ROAD. PARTICULAR ATTENTION SHALL BE GIVEN TO ACCESSES AND INTERSECTING ROADS WHERE NECESSARY.
3. ALL TEMPORARY ROAD SIGNS SHALL COMPLY WITH THE SADC-RTSM LATEST EDITION.
4. MINIMUM SIZES OF SIGNS :
   TRIANGULAR : 1200mm SIDE LENGTH
   CIRCULAR : 900mm DIAMETER
   RECTANGULAR : HIGH VISIBILITY BACKGROUND : 1200mm x 1600mm
   TW411: 400mm x 2400mm
5. ALL SIGNS SHALL BE ERECTED SO THAT THE BOTTOM OF THE SIGN IS 750mm ABOVE THE NATURAL GROUND LEVEL AND 600mm (RECOMMENDED) FROM THE EDGE OF SURFACING (SPACE PERMITTING).
6. TRAFFIC CONES SHALL BE AT LEAST 600mm HIGH (750mm PREFERABLY), MANUFACTURED FROM A FLEXIBLE FLUORESCENT RED-ORANGE MATERIAL. THE BASE OF THE CONE SHALL BE NON-CIRCULAR.
7. ALL TRAFFIC CONES, TD4, SHALL BE FITTED WITH RETRO-REFLECTIVE SLEEVES IF WORK IS CONTINUED DURING PERIODS OF DUSK AND TWILIGHT.
8. FLAGS SHALL BE MADE FROM A FLUORESCENT RED-ORANGE MATERIAL AND SHALL BE SQUARE WITH A MINIMUM SIDE LENGTH OF 600mm. THEY SHALL BE AFFIXED TO STAFFS APPROXIMATELY 1m IN LENGTH AND KEPT PROPERLY IN POSITION.
9. FLAGMEN AND ALL OTHER WORKERS SHALL WEAR JACKETS MANUFACTURED FROM A FLUORESCENT RED-ORANGE MATERIAL WITH RETRO-REFLECTIVE MATERIAL AFFIXED TO THE JACKET.
10. IF A TRUCK IS USED ON SITE IT SHALL BE PARKED OFF THE ROADWAY OR (IF USED ON THE ROADWAY) BE GIVEN A HIGH VISIBILITY REAR-END TREATMENT.

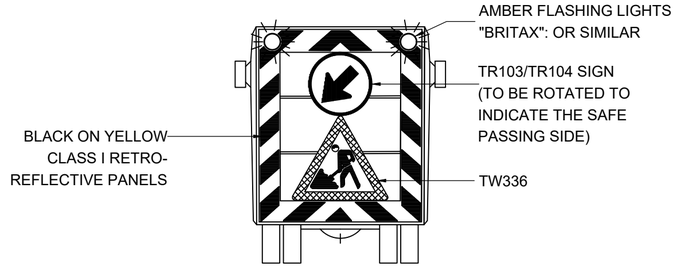

TYPICAL HIGH VISIBILITY REAR PANEL ON VEHICLE

No.	DATE	ADDITIONS AND AMENDMENTS
0	OCT - 2023	ORIGINAL VERSION

STANDARD PLANS

WESTERN CAPE GOVERNMENT
DEPARTMENT OF INFRASTRUCTURE
TRANSPORT INFRASTRUCTURE BRANCH

ACCOMMODATION OF TRAFFIC

ROAD SIGN LAYOUT FOR MATERIALS INVESTIGATION WORK

SCALE : N.T.S.

A2 ORIGINAL

INDEX NO. WCS/15/1/D6

PLAN NO. SHEET 6 OF 10

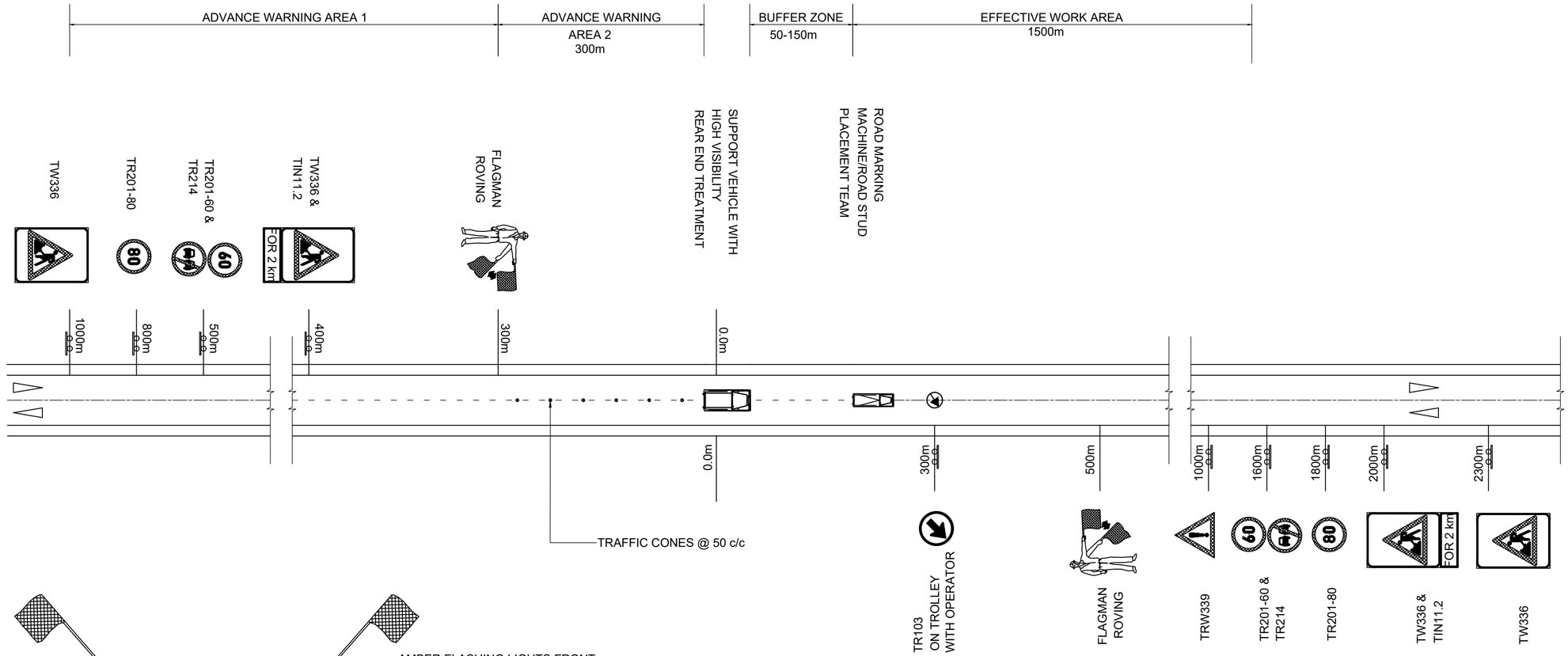

ROAD SIGNS LAYOUT FOR MOBILE WORK

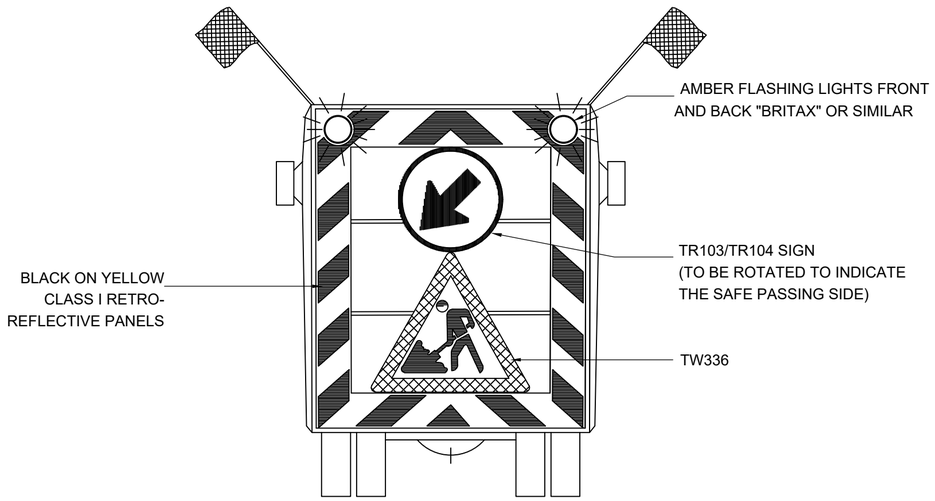

HIGH VISIBILITY REAR PANEL ON VEHICLE

NOTES:

1. LENGTH OF EFFECTIVE WORK AREA TO BE APPROVED BY ENGINEER.

No.	DATE	ADDITIONS AND AMENDMENTS
0	OCT - 2023	ORIGINAL VERSION

STANDARD PLANS

WESTERN CAPE GOVERNMENT
DEPARTMENT OF INFRASTRUCTURE
TRANSPORT INFRASTRUCTURE BRANCH

ACCOMMODATION OF TRAFFIC

MOBILE WORK ON ROAD CENTRE LINE

SCALE : N.T.S.

A2 ORIGINAL

INDEX NO. WCS/15/1/D7

PLAN NO. SHEET 7 OF 10

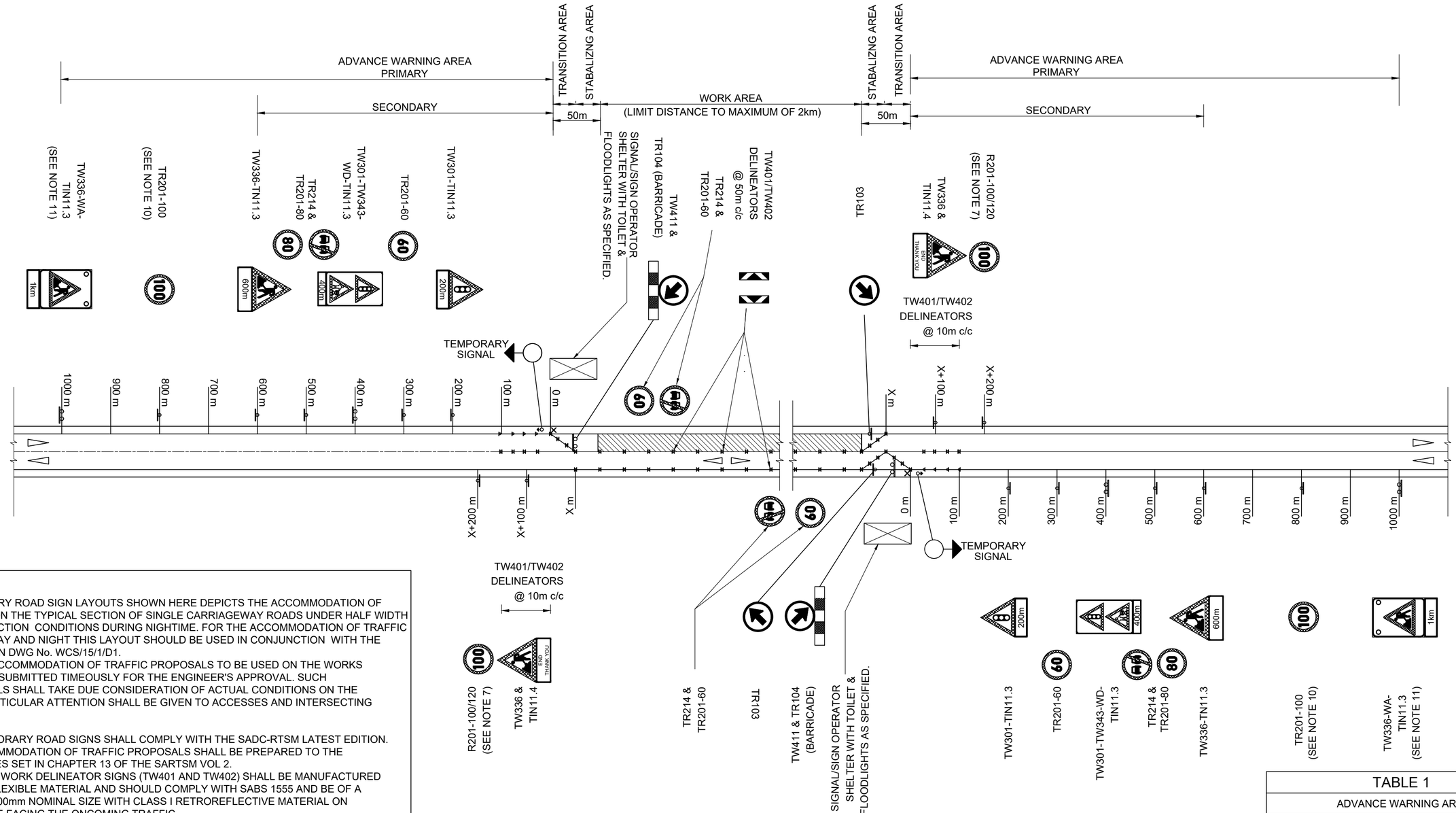

NOTES

1. TEMPORARY ROAD SIGN LAYOUTS SHOWN HERE DEPICTS THE ACCOMMODATION OF TRAFFIC ON THE TYPICAL SECTION OF SINGLE CARRIAGEWAY ROADS UNDER HALF WIDTH CONSTRUCTION CONDITIONS DURING NIGHTIME. FOR THE ACCOMMODATION OF TRAFFIC DURING DAY AND NIGHT THIS LAYOUT SHOULD BE USED IN CONJUNCTION WITH THE LAYOUT ON DWG No. WCS/15/1/D1.
2. ACTUAL ACCOMMODATION OF TRAFFIC PROPOSALS TO BE USED ON THE WORKS SHALL BE SUBMITTED TIMEOUSLY FOR THE ENGINEER'S APPROVAL. SUCH PROPOSALS SHALL TAKE DUE CONSIDERATION OF ACTUAL CONDITIONS ON THE ROAD PARTICULAR ATTENTION SHALL BE GIVEN TO ACCESSES AND INTERSECTING ROADS.
3. ALL TEMPORARY ROAD SIGNS SHALL COMPLY WITH THE SADC-RTSM LATEST EDITION. ALL ACCOMMODATION OF TRAFFIC PROPOSALS SHALL BE PREPARED TO THE GUIDELINES SET IN CHAPTER 13 OF THE SARTSM VOL 2.
4. ALL ROAD WORK DELINEATOR SIGNS (TW401 AND TW402) SHALL BE MANUFACTURED FROM A FLEXIBLE MATERIAL AND SHOULD COMPLY WITH SABS 1555 AND BE OF A 200mm x 800mm NOMINAL SIZE WITH CLASS I RETROREFLECTIVE MATERIAL ON THE BLADE FACING THE ONCOMING TRAFFIC.
5. MINIMUM SIZES OF SIGNS :
   TRIANGULAR : 1500mm SIDE LENGTH
   CIRCULAR : 1200mm DIAMETER
   RECTANGULAR : HIGH VISIBILITY BACKGROUND : 1800mm x 2400mm.
   TIN11.X : 400mm HIGH, LENGTH TO FIT PRIMARY SIGN.
   TW411 : 400mm x 2400mm.
6. ROADWORK DELINEATOR SIGNS (TW401 AND TW402) SHOULD BE SO POSITIONED THAT ENCROACHMENT ON THE ADJACENT RUNNING LANE IS AVOIDED AS FAR AS POSSIBLE.
7. THE R201 SIGNS BEYOND THE WORK AREA SHALL AGREE WITH THE SPEED LIMIT ON THE SUBSEQUENT SECTION OF ROAD.
8. THE SPEED LIMIT IN THE WORK AREA SHALL BE SET AT A REALISTIC LEVEL. IN AREAS WHERE TRANSITION TAKES PLACE THE SPEED LIMIT COULD BE REDUCED LOCALLY, TO BE REVISED WHERE TRAFFIC FLOW CONDITIONS STABILIZED AT MORE UNIFORM LEVELS.
9. THIS MEANS OF TRAFFIC CONTROL IS APPROPRIATE FOR THE ACCOMODATION OF TRAFFIC DURING THE NIGHT.
10. THIS SIGN CAN BE OMITTED IF THE CURRENT SPEED LIMIT ON THE SECTION OF THE ROAD IS 100km/h OR LOWER.
11. THIS SIGN SHOULD BE FITTED WITH TWO AMBER FLASHING LIGHTS AS SPECIFIED.

SINGLE CARRIAGEWAY ROAD
TRAFFIC SIGNAL CONTROL

TABLE 1

ADVANCE WARNING AREA	
APPROACH SPEED	LENGTH
PRIMARY ADVANCE WARNING AREA (1)	
100-120km/h	1000m
60-80km/h	600m
URBAN	150-300m
SECONDARY ADVANCE WARNING AREA (2)	
60-80km/h	400-600m
< 60km/h	200-400m

NOTES:
1.APPLICABLE TO THE ONLY OR THE FIRST OF A SERIES OF ROADWORKS AREAS AND IS INTENDED TO ADVISE THE MOTORIST OF CONDITIONS AHEAD REQUIRING PARTICULAR CARE
2.APPLICABLE TO SUBSEQUENT ROADWORKS AREAS OR TRANSITIONS WITHIN A CONSTRUCTION ZONE REQUIRING EXTRA CARE

TABLE 2

TRANSITION AREA			
APPROACH SPEED	TAPER RATE	TAPER LENGTH	DELINEATOR SPACING
TRANSITION TAPERS			
120km/h	1 in 50	200m	15m
80km/h	1 in 40	160m	15m
60km/h	1 in 30	120m	10m
40km/h	1 in 20	80m	5m
< 40km/h	1 in 10	40m	5m
TERMINATION TAPERS			
RURAL	1 in 10	40m-50m	15m
URBAN	1 in 5	20m	5m

NOTES:
1.TAPER LENGTH DEPENDS ON THE AMOUNT OF SHIFT IN THE ALIGNMENT; LENGTHS SHOWN HERE APPLY TO A SHIFT OF 4m.

TABLE 3

LENGTH OF STABILIZING AREA	
DESIRABLE	150m - 200m
ABSOLUTE MINIMUM	50m

No.	DATE	ADDITIONS AND AMENDMENTS
0	OCT - 2023	ORIGINAL VERSION

STANDARD PLANS

WESTERN CAPE GOVERNMENT
DEPARTMENT OF INFRASTRUCTURE
TRANSPORT INFRASTRUCTURE BRANCH

ACCOMMODATION OF TRAFFIC

TRAFFIC SIGNAL CONTROL AT NIGHT FOR HALF WIDTH CONSTRUCTION

SCALE : N.T.S.

A2 ORIGINAL

INDEX NO.
WCS/15/1/D8

PLAN NO.
SHEET 8 OF 10

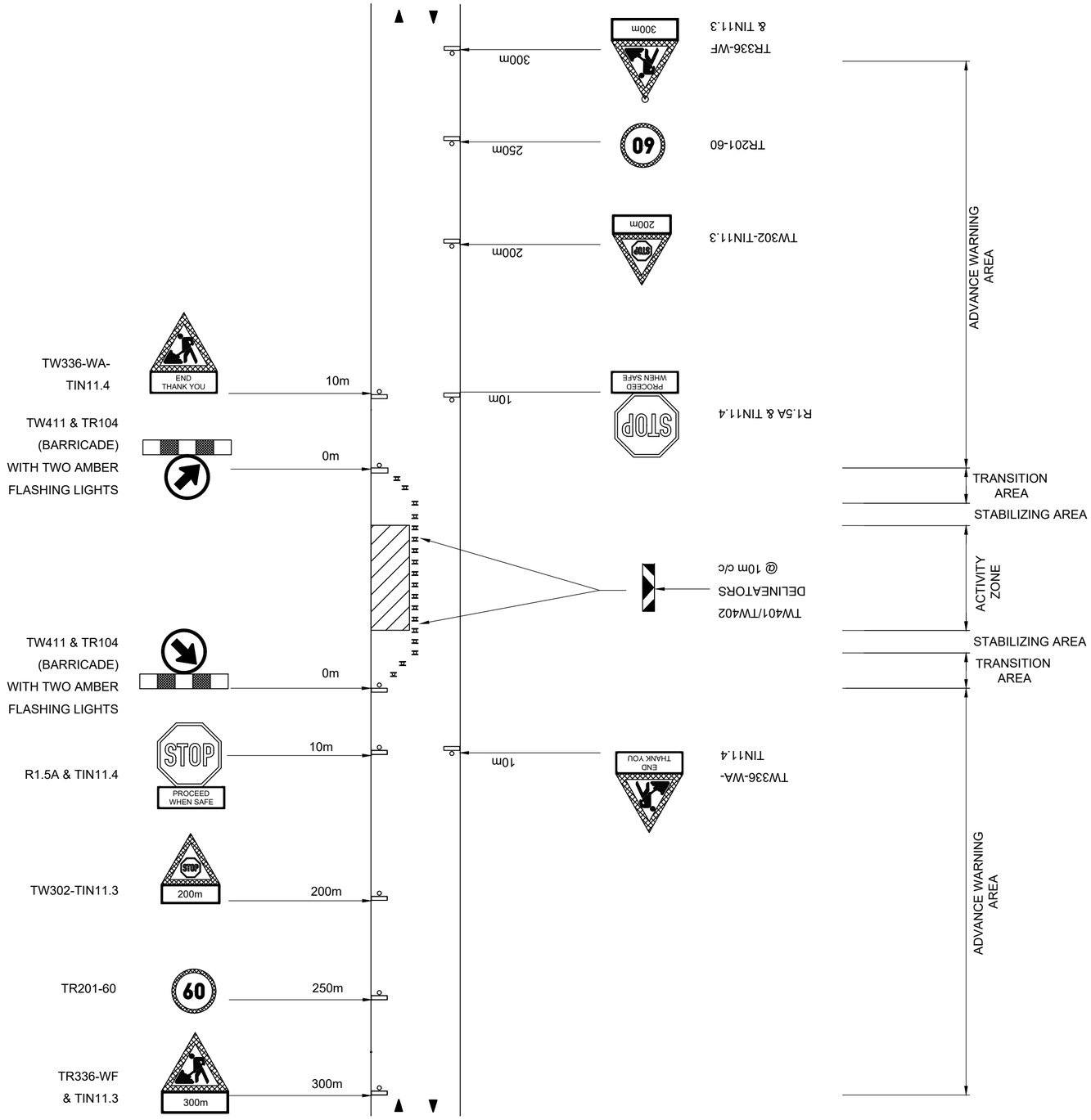

SHORT TERM LANE CLOSURE

TABLE 1	
ADVANCE WARNING AREA	
APPROACH SPEED	LENGTH
< 60km/h	200-400m

TABLE 2		
TRANSITION AREA		
APPROACH SPEED	TAPER RATE	DELINEATOR SPACING
40Km/h-60Km/h	1 in 10	10m

TABLE 3	
LENGTH OF STABILIZING AREA	
ABSOLUTE MINIMUM	10m

NOTES:

1. TEMPORARY ROAD SIGN LAYOUT SHOWN HERE DEPICTS THE ACCOMMODATION OF TRAFFIC ON THE TYPICAL SECTION OF SINGLE CARRIAGEWAY GRAVEL ROADS UNDER HALF WIDTH CONSTRUCTION CONDITIONS.
2. ACTUAL ACCOMMODATION OF TRAFFIC PROPOSALS TO BE USED ON THE WORKS SHALL BE SUBMITTED TIMEOUSLY FOR THE ENGINEER'S APPROVAL. SUCH PROPOSALS SHALL TAKE DUE CONSIDERATION OF ACTUAL CONDITIONS ON THE ROAD. PARTICULAR ATTENTION SHALL BE GIVEN TO ACCESSES AND INTERSECTING ROADS.
3. ALL TEMPORARY ROAD SIGNS SHALL COMPLY WITH THE SADC-RTSM LATEST EDITION. ALL ACCOMMODATION OF TRAFFIC PROPOSALS SHALL BE PREPARED TO THE GUIDELINES SET IN CHAPTER 13 OF THE SARTSM.
4. ALL ROAD WORK DELINEATOR SIGNS (TW401 AND TW402) SHALL BE MANUFACTURED FROM A FLEXIBLE MATERIAL AND SHOULD COMPLY WITH SABS 1555 AND BE OF A 200mm x 800mm NOMINAL SIZE WITH CLASS I RETROREFLECTIVE MATERIAL ON THE BLADE FACING THE ONCOMING TRAFFIC.
5. MINIMUM SIZES OF SIGNS :
   TRIANGULAR : 1500mm SIDE LENGTH
   RECTANGULAR : HIGH VISIBILITY BACKGROUND : 1800mm x 2400mm.
   TIN11.X : 400mm HIGH, LENGTH TO FIT PRIMARY SIGN.
   TW411 : 400mm x 2400mm.
6. ROADWORK DELINEATOR SIGNS (TW401 AND TW402) SHOULD BE SO POSITIONED THAT ENCROACHMENT ON THE ADJACENT RUNNING LANE IS AVOIDED AS FAR AS POSSIBLE.

No.	DATE	ADDITIONS AND AMENDMENTS
0	OCT - 2023	ORIGINAL VERSION

STANDARD PLANS

WESTERN CAPE GOVERNMENT
DEPARTMENT OF INFRASTRUCTURE
TRANSPORT INFRASTRUCTURE BRANCH

ACCOMMODATION OF TRAFFIC

GRAVEL ROADS (LOW VOLUME<100/DAY
ONE LANE CLOSED

SCALE : N.T.S.

A2 ORIGINAL

INDEX NO.
WCS/15/1/D9

PLAN NO.
SHEET 9 OF 10

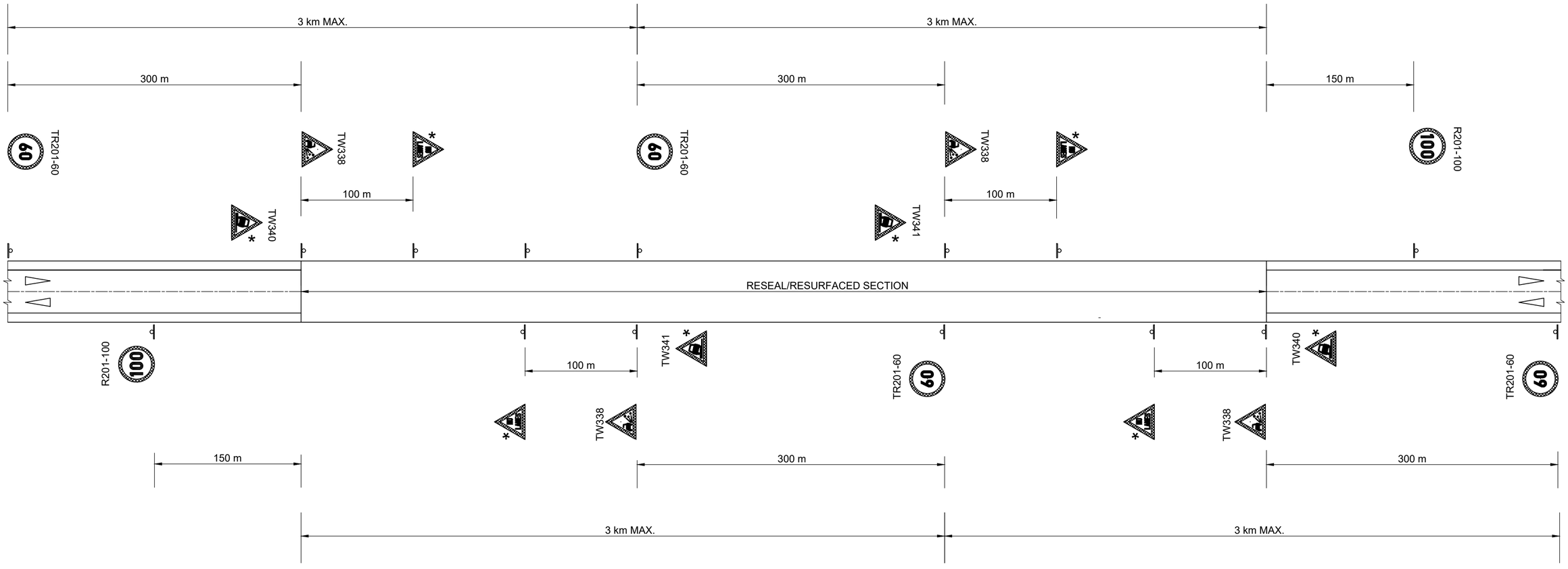

* = OPTIONAL SIGNS

NOTES

1. TEMPORARY ROAD SIGN LAYOUT SHOWN DEPICT THE ACCOMMODATION OF TRAFFIC. FOR THE JUST COMPLETED RESEAL/RESURFACING.
2. THIS DRAWING TO BE READ IN CONJUNCTION WITH DRAWING NO. WCS/15/1/D1
3. APPROPRIATE SIGN (TW340 OR TW341) SHOULD BE SELECTED BASED ON DIRECTION OF SURFACE STEP.
4. THE R201 SINGS BEYOND THE WORK AREA SHALL AGREE WITH THE SPEED LIMIT ON THE SUBSEQUENT SECTION OF ROAD.

No.	DATE	ADDITIONS AND AMENDMENTS
0	OCT - 2023	ORIGINAL VERSION

STANDARD PLANS

WESTERN CAPE GOVERNMENT
DEPARTMENT OF INFRASTRUCTURE
TRANSPORT INFRASTRUCTURE BRANCH

ACCOMMODATION OF TRAFFIC

TYPICAL ROAD SIGN LAYOUT FOR JUST COMPLETED RESEAL/RESURFACING WORK

SCALE : N.T.S.

A2 ORIGINAL

INDEX NO.
WCS/15/1/D10

PLAN NO.
SHEET 10 OF 10

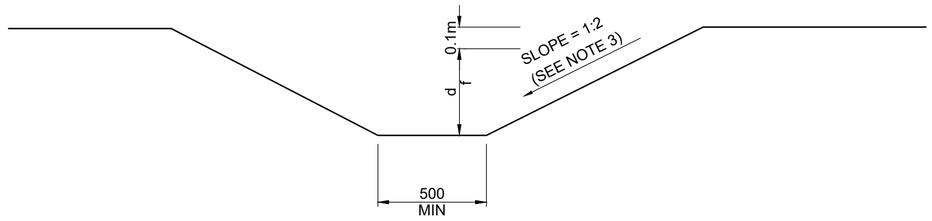

UNLINED OPEN DRAIN

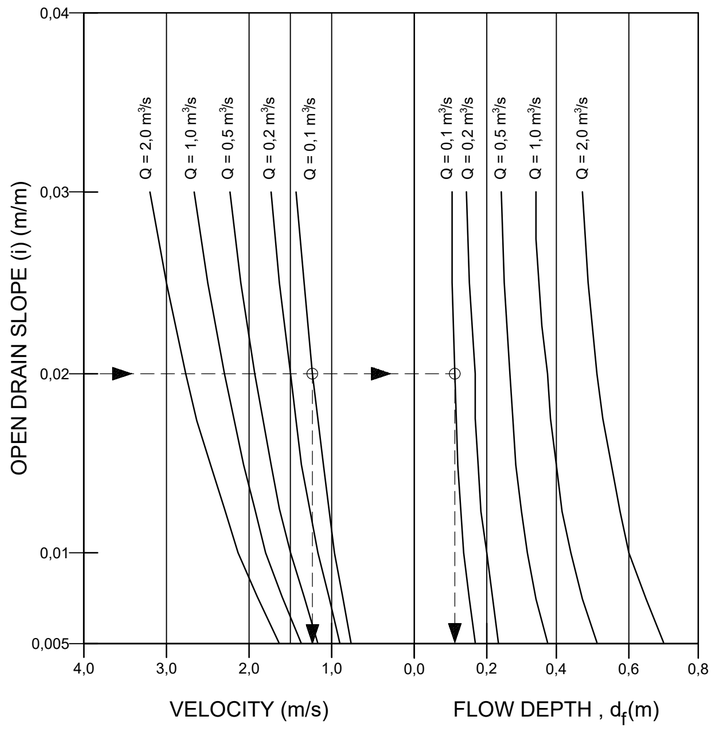

UNLINED OPEN DRAIN

PROCEDURE :

1. ESTABLISH FLOW(Q), SLOPE(i).
2. DETERMINE VELOCITY(V) AND DRAIN DEPTH(d) FROM GRAPHS (ASSUMING DRAIN WIDTH IS 500mm).
3. SELECT TYPE OF LINING ACCORDING TO SOIL TYPE AND VELOCITY(V) AS FOLLOWS:

   SANDY SOILS:
   IF V<1m/s ONLY GRASS LINING REQUIRED, IF V>1 THEN USE MOST COST EFFECTIVE LINING MATERIAL IN TABLE 1.

   COHESIVE SOILS:
   IF V<1.5m/s ONLY GRASS LINING REQUIRED, IF V>1.5 THEN USE MOST COST EFFECTIVE LINING MATERIAL IN TABLE 1.

   ROCK:
   NO LINING IS REQUIRED

4. IF LINING REQUIRED REDUCE DEPTH OF OPEN DRAIN AS SHOWN IN LINED OPEN DRAIN DIAGRAM.

TABLE 1	
LINING MATERIAL	THICKNESS
CONCRETE	125mm
STONE PITCHING	±100mm
GABION MATTRESS	300mm

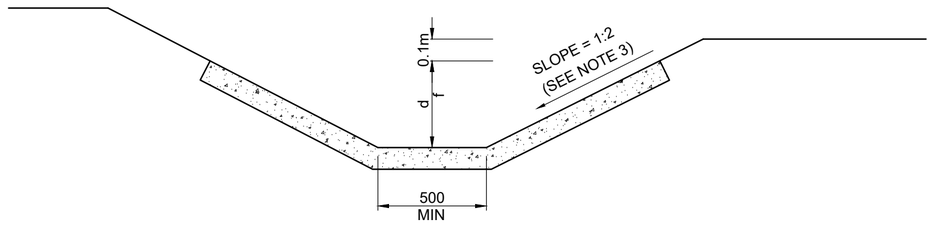

LINED OPEN DRAIN

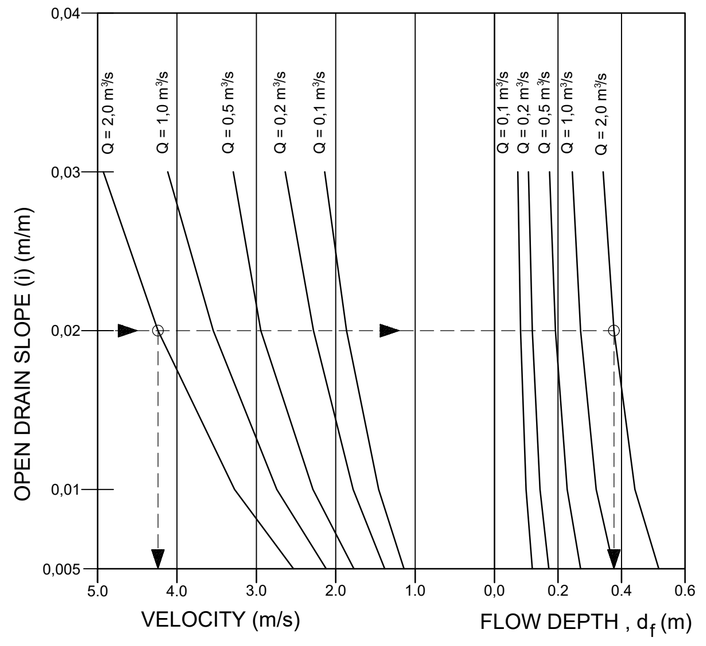

LINED OPEN DRAIN

CONSTANTS USED IN CALCULATIONS	
INVERT WIDTH	= 0,5m
CUT SLOPE	= 1:1,5
MANNING CONSTANT	= 0,022 FOR UNLINED DRAINS = 0,012 FOR CONCRETE LINED DRAINS

No.	DATE	ADDITIONS AND AMENDMENTS
0	OCT - 2023	ORIGINAL VERSION

STANDARD PLANS

WESTERN CAPE GOVERNMENT
DEPARTMENT OF INFRASTRUCTURE
TRANSPORT INFRASTRUCTURE BRANCH

OPEN DRAINS

DETAIL OF OPEN DRAINS

SCALE : N.T.S.

A2 ORIGINAL

INDEX NO.
WCS/21/1/D1

PLAN NO.
SHEET 1 OF 1

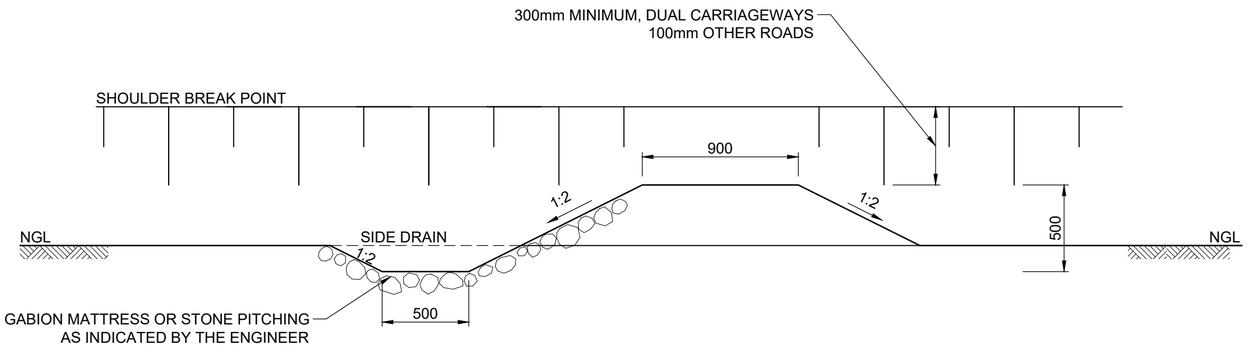

SECTION A-A

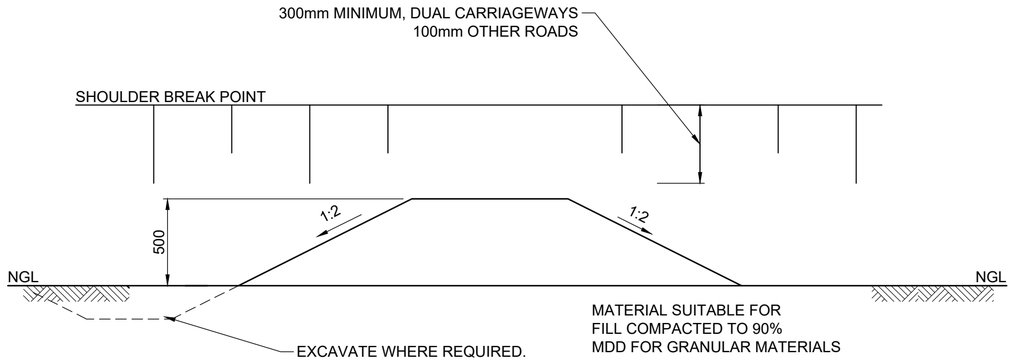

SECTION B-B

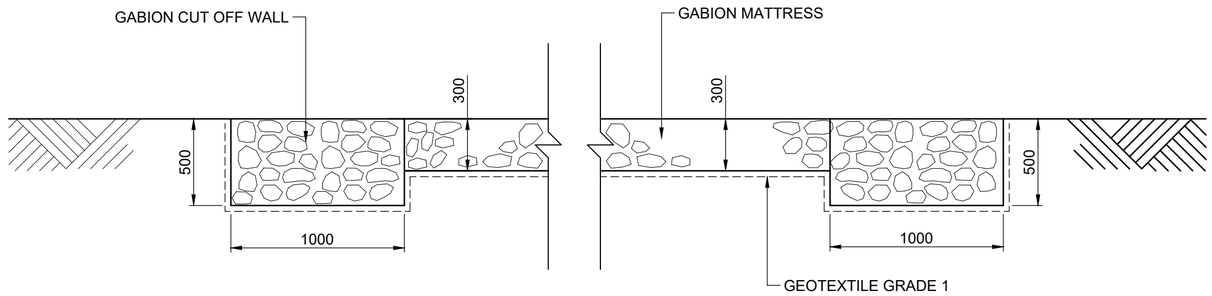

SECTION C-C

NOTES :

1. APPLICATION : (a) RELATIVE FLAT TERRAIN LESS THAN 2% SLOPE
   RUN OFF DRAINS TOWARDS TOE LINE
   (b) NATURAL VELOCITY ON TOE LINE LESS THAN 2,0 m/s
   (c) WHERE SHOWN ON LAYOUT DRAWINGS OR SPECIFIED BY THE ENGINEER

2. MATERIAL : (a) FILL MATERIAL COMPACTED TO 90% MOD.AASHTO DENSITY
   (b) 300mm GABION MATTRESS OR STONE PITCHING PROTECTION ON SIDE DRAIN FLOOR AND BERM SLOPE FOR SIDE DRAIN VELOCITY EXEEDING 2,0m/s

3. SPACING : (a) WHEN NATURAL VELOCITY OF RUN OFF ON TOE LINE EXCEEDS 2,0m/s
   (b) DETERMINED BY NATURAL TOPOGRAPHY

4. ANGLE : (a) α MUST BE DETERMINED BY NATURAL TOPOGRAPHY TO PROVIDE A SLOPE OF 0,5% ADJACENT TO THE BERM WITH AN OUTLET WITHIN THE ROAD RESERVE
   (b) α > 45 DEGREES OTHERWISE PROVIDE TOE LINE PROTECTION OR CHANNEL

5. PROTECTION : (a) EXTEND PROTECTION TO A POINT WHERE VELOCITY IS LESS THAN 1,0 m/s OR UN-ERODABLE MATERIAL.

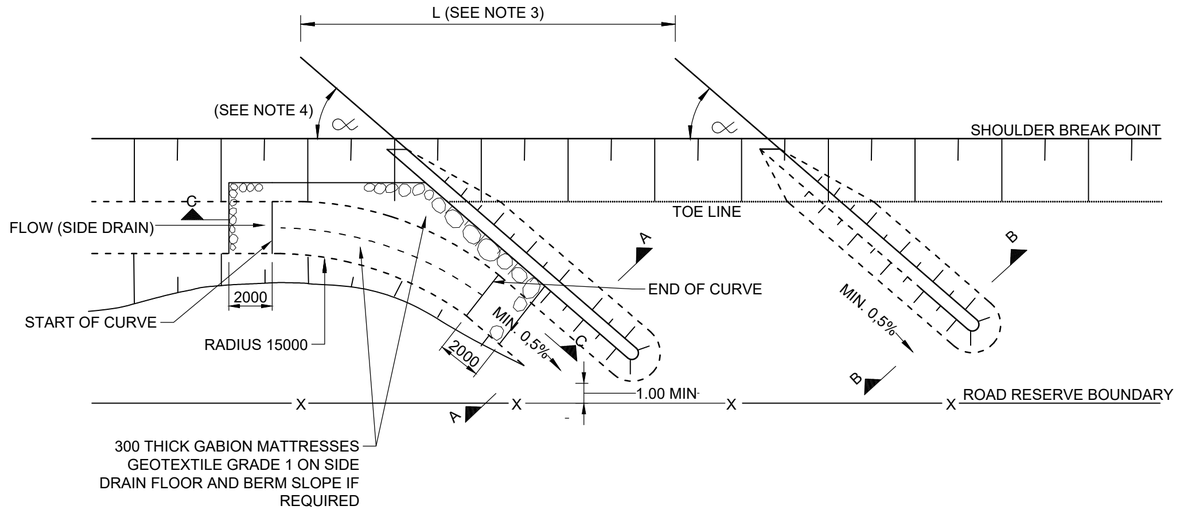

OPEN DRAIN WITH BERM

BERM ONLY

PLAN

No.	DATE	ADDITIONS AND AMENDMENTS
0	OCT - 2023	ORIGINAL VERSION

STANDARD PLANS

WESTERN CAPE GOVERNMENT
DEPARTMENT OF INFRASTRUCTURE
TRANSPORT INFRASTRUCTURE BRANCH

BANKS AND DYKES

TYPICAL DETAIL OF DYKES

SCALE : N.T.S.

A2 ORIGINAL

INDEX NO. WCS/21/2/C1

PLAN NO. SHEET 1 OF 2

N.G.L.SLOPES AT 1:5 0R LESS

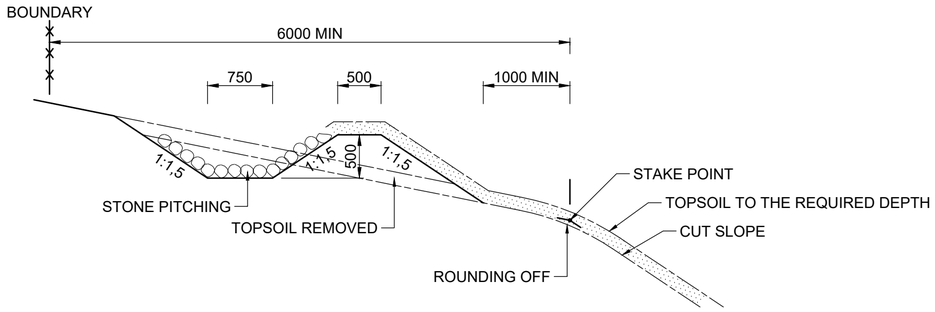

SOFT MATERIAL

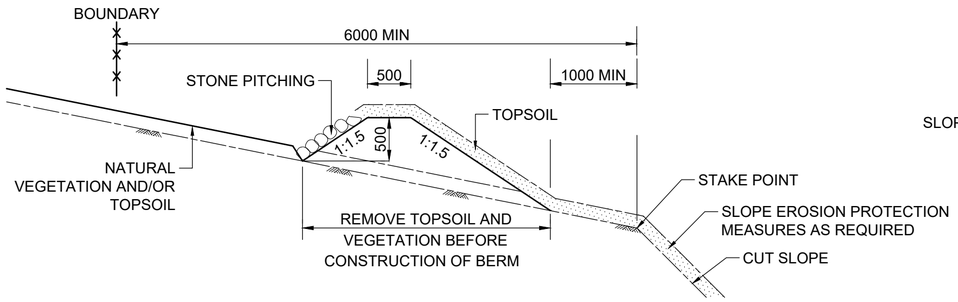

HARD MATERIAL

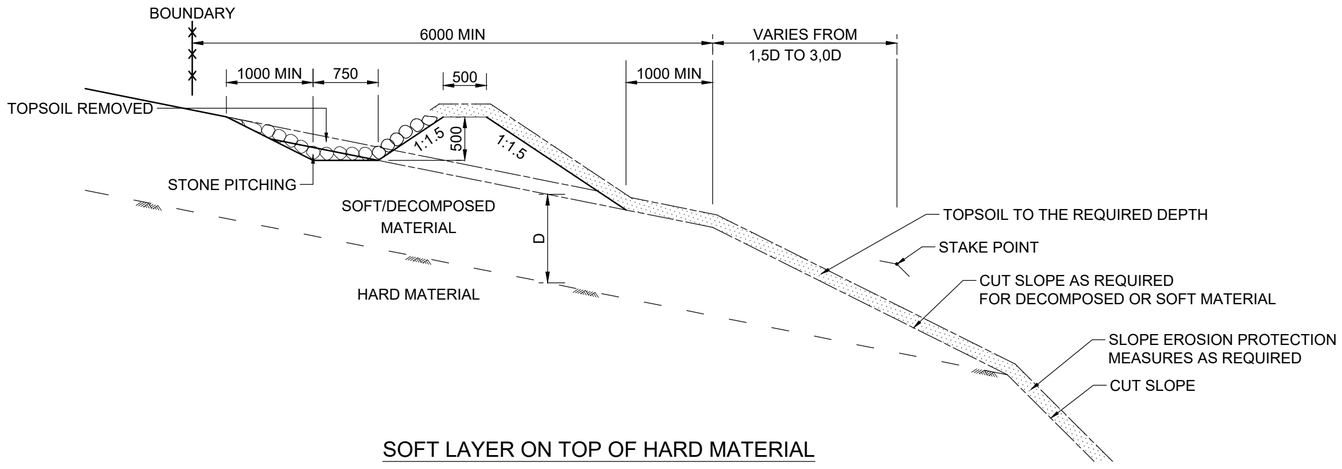

SOFT LAYER ON TOP OF HARD MATERIAL

N.G.L.SLOPES STEEPER THAN 1:5

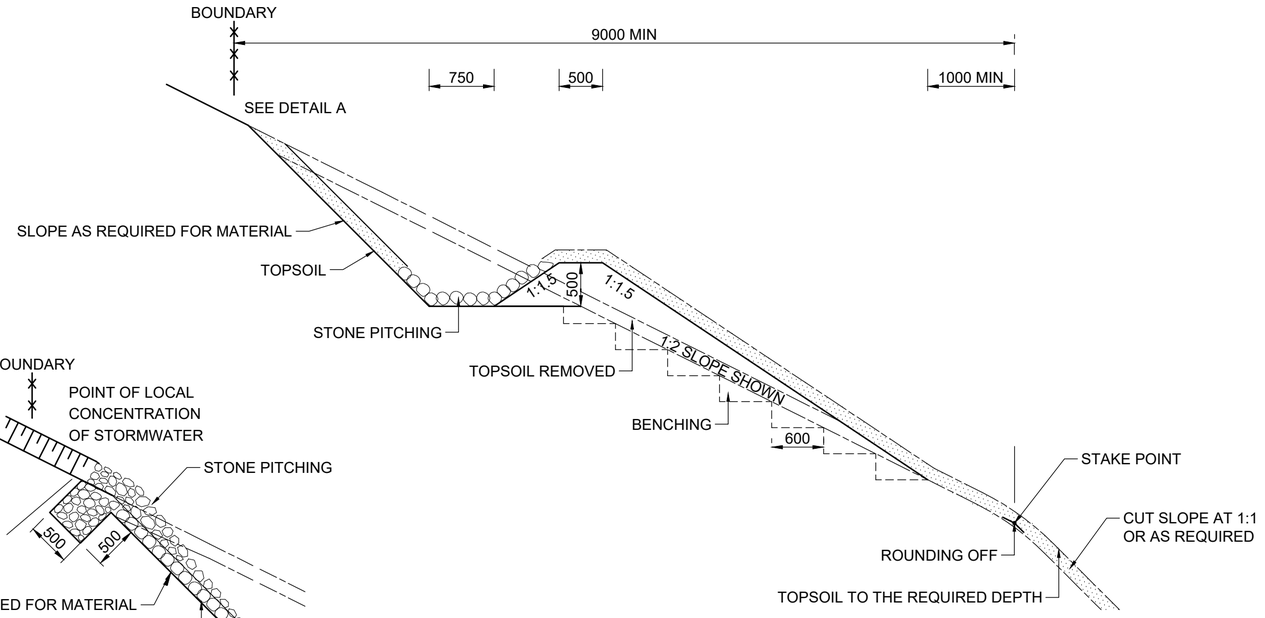

SOFT MATERIAL

DETAIL A
(WHERE REQUIRED)

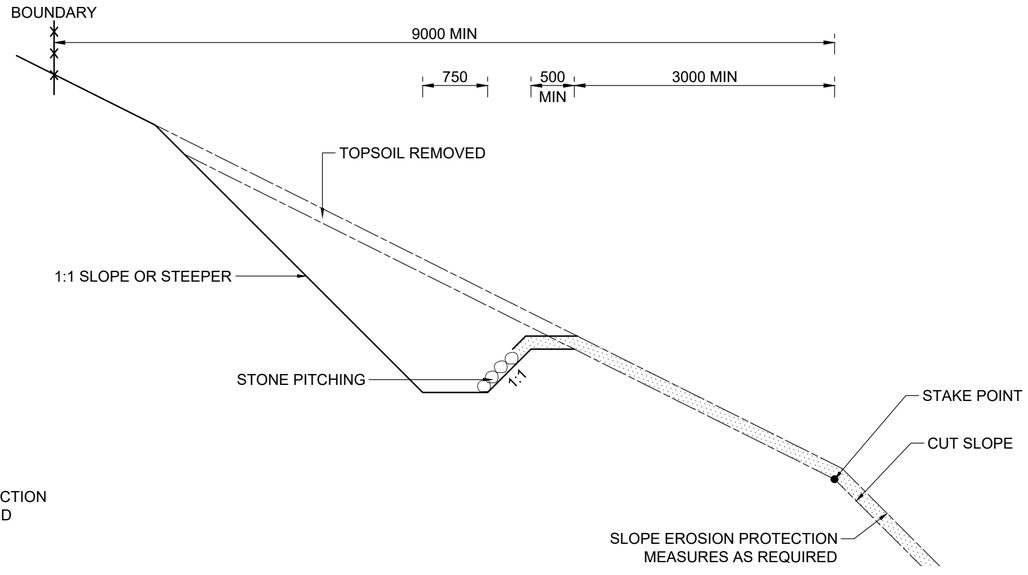

HARD MATERIAL

No.	DATE	ADDITIONS AND AMENDMENTS
0	OCT - 2023	ORIGINAL VERSION

STANDARD PLANS

WESTERN CAPE GOVERNMENT
DEPARTMENT OF INFRASTRUCTURE
TRANSPORT INFRASTRUCTURE BRANCH

BANKS AND DYKES

DETAILS OF DYKES AT CUTTINGS

SCALE : N.T.S.

A2 ORIGINAL

INDEX NO.
WCS/21/2/C2

PLAN NO.
SHEET 2 OF 2

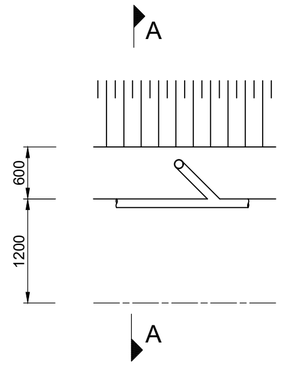

TYPICAL PLAN OF CLEANING EYE

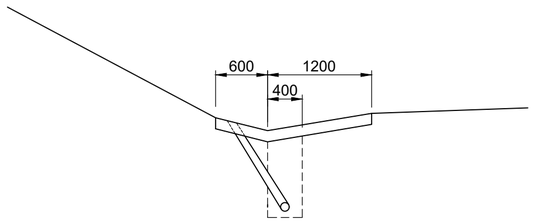

SECTION A-A

NOTES :

1. ACTUAL LAYOUT OF SUBSOIL DRAINAGE TO BE AS SHOWN ON LAYOUT PLANS OR AS ORDERED BY THE ENGINEER.
2. REFER TO DWG. No. WCS/21/3/C3 FOR DETAILS OF CLEANING EYE.
3. REFER TO DWG. No. WCS/23/3/C3,C4 FOR GRID INLET DETAILS.
4. REFER TO DWG. No. WCS/21/3/C4 FOR OUTLET DETAILS.

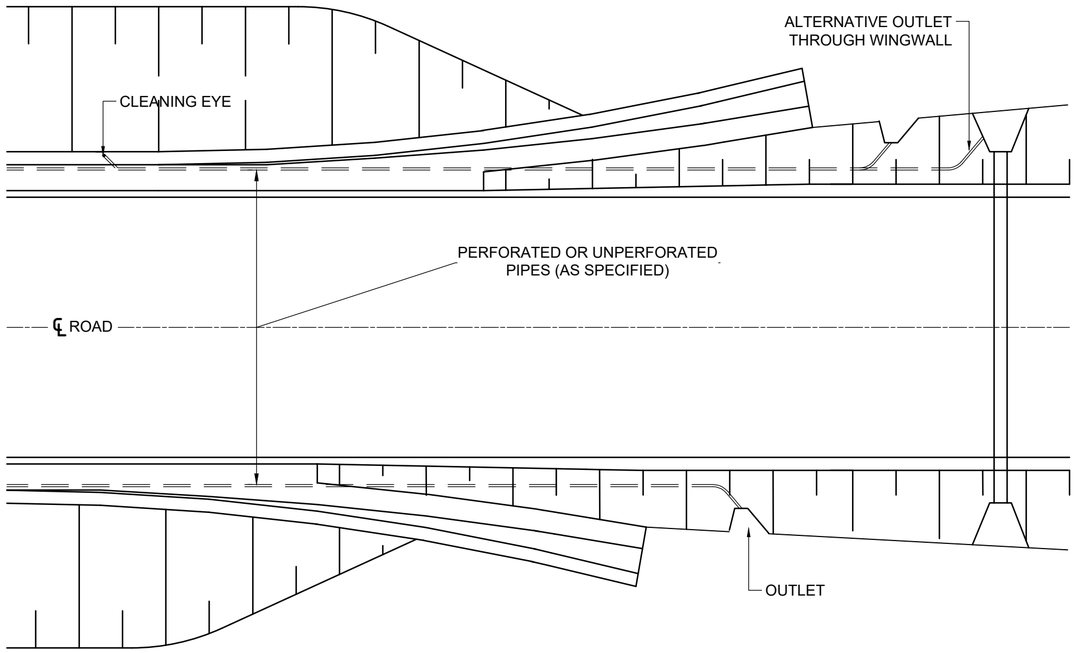

TYPICAL LAYOUT OF SUBSURFACE DRAINAGE

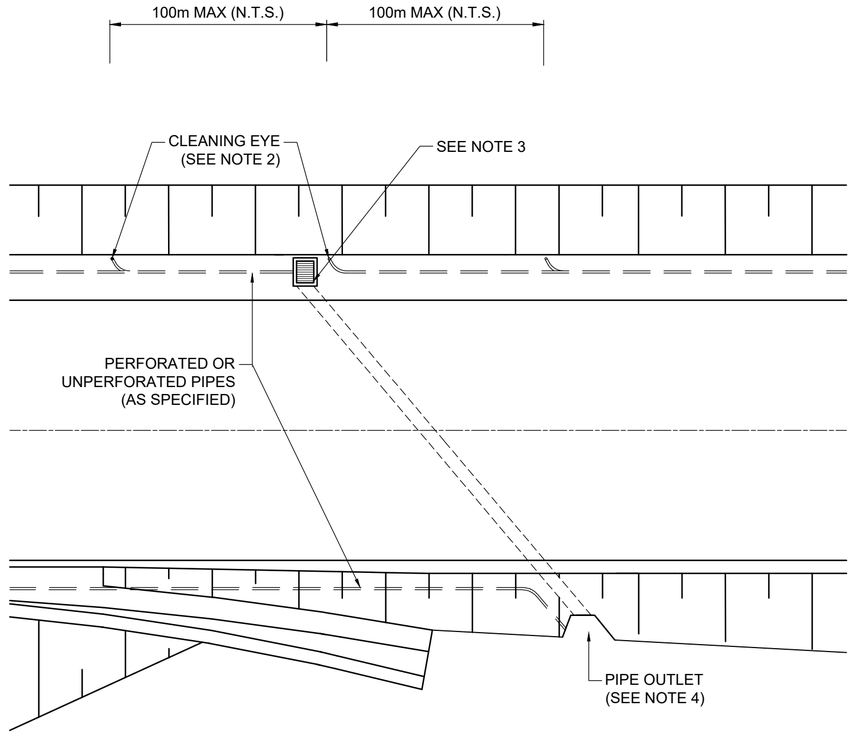

LAYOUT WITH GRID INLET

No.	DATE	ADDITIONS AND AMENDMENTS
0	OCT - 2023	ORIGINAL VERSION

STANDARD PLANS

WESTERN CAPE GOVERNMENT
DEPARTMENT OF INFRASTRUCTURE
TRANSPORT INFRASTRUCTURE BRANCH

SUBSOIL DRAINAGE

TYPICAL LAYOUT OF SUBSOIL DRAINS

SCALE : N.T.S.

A2 ORIGINAL

INDEX NO.
WCS/21/3/C1

PLAN NO.
SHEET 1 OF 4

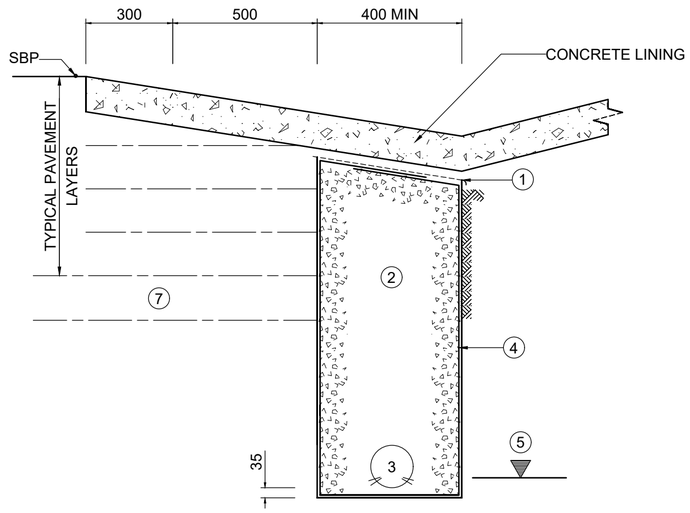

TYPICAL CROSS SECTIONS WITH A CONCRETE SIDE DRAIN

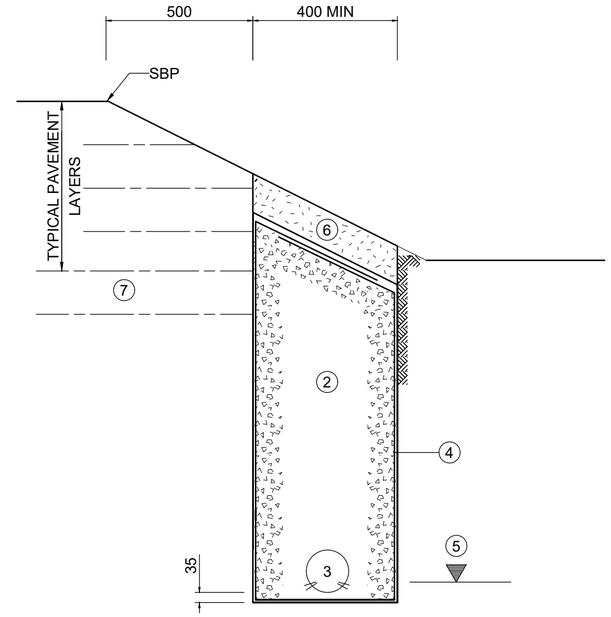

TYPICAL CROSS SECTIONS WITH AN UNLINED EARTH SIDE DRAIN

NO.	DESCRIPTION
1	150 MICRON POLYETHYLENE SHEETING
2	FILTER STONE : 20,0mm NOMINAL SIZE STONE
3	PERFORATED PIPES (MINIMUM 100mm DIA.)
4	GRADE 2 OR GRADE 3 GEOTEXTILE AS SPECIFIED
5	LEVEL TO WHICH SURROUNDING AREA IS TO BE DRAINED
6	SOIL CEMENT SEAL USING STIFF MIXTURE AS DESCRIBED IN CLAUSE 2211 OF THE COLTO STANDARD SPECIFICATIONS FOR ROAD AND BRIDGE WORKS
7	DRAINABLE SELECTED SUBGRADE LAYER, IF REQUIRED

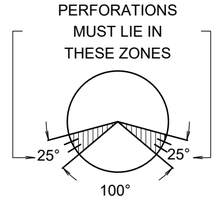

DETAIL OF PERFORATIONS

No.	DATE	ADDITIONS AND AMENDMENTS
0	OCT - 2023	ORIGINAL VERSION

STANDARD PLANS

WESTERN CAPE GOVERNMENT
DEPARTMENT OF INFRASTRUCTURE
TRANSPORT INFRASTRUCTURE BRANCH

SUBSOIL DRAINAGE

DETAILS OF SUBSOIL SYSTEMS

SCALE : N.T.S.

A2 ORIGINAL

INDEX NO.
WCS/21/3/C2

PLAN NO.
SHEET 2 OF 4

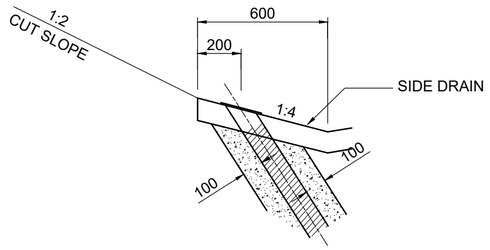

SECTION A-A

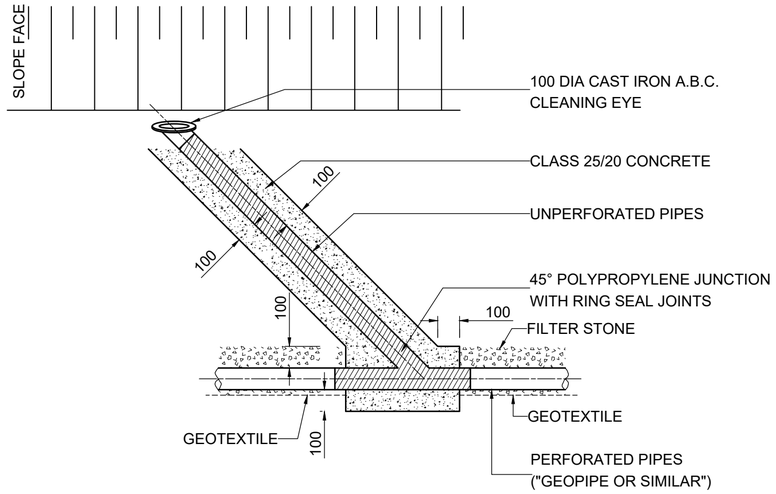

ELEVATION B-B

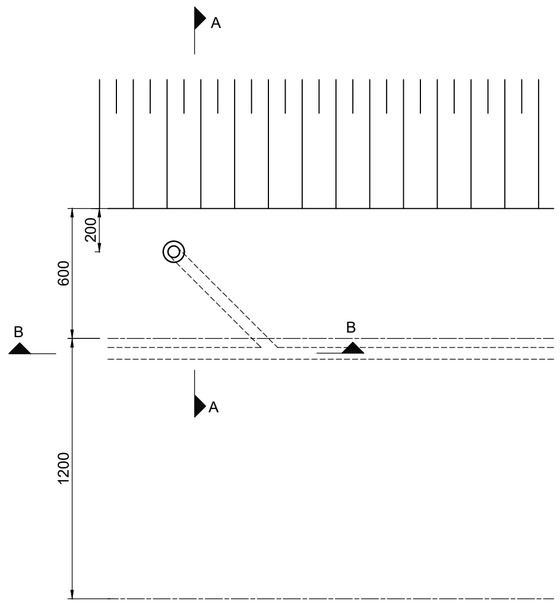

PLAN

NOTES :

1. POSITION OF CLEANING EYES :

   (a) WHERE NO HAZARD IS CAUSED TO TRAFFIC OR MAINTENANCE IN THE ROAD RESERVE
   (b) CLEARLY VISIBLE

2. MAXIMUM SPACING : 100m

No.	DATE	ADDITIONS AND AMENDMENTS
0	OCT - 2023	ORIGINAL VERSION

STANDARD PLANS

WESTERN CAPE GOVERNMENT
DEPARTMENT OF INFRASTRUCTURE
TRANSPORT INFRASTRUCTURE BRANCH

SUBSOIL DRAINAGE

TYPICAL DETAILS OF CLEANING EYES

SCALE : N.T.S.

A2 ORIGINAL

INDEX NO.
WCS/21/3/C3

PLAN NO.
SHEET 3 OF 4

NOTES :

1. CONCRETE CLASS 30/20
2. CONCRETE FINISH
   - NON VISIBLE SURFACES F1
   - VISIBLE SURFACES F2
   - UNIFORMED SURFACES U2
3. ALL EXPOSED SHARP EDGES TO HAVE 20x20mm CHAMFERS
4. MINIMUM CONCRETE COVER= 50mm

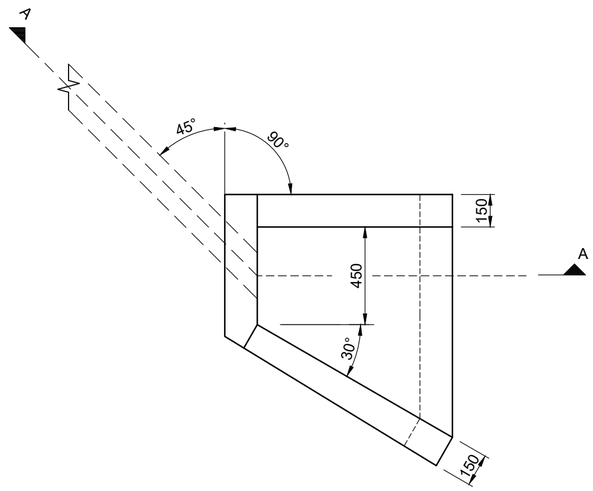

PLAN

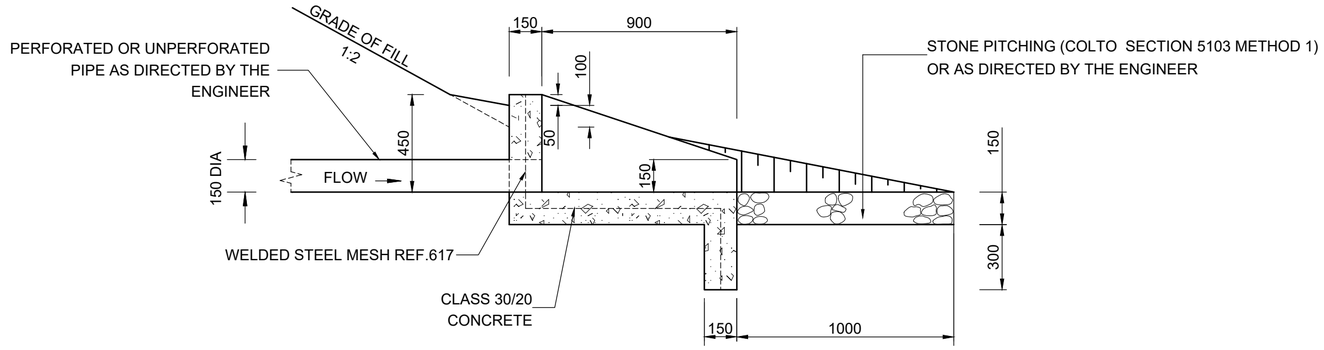

SECTION A-A

DETAIL OF OUTLET IN FILL BATTER

No.	DATE	ADDITIONS AND AMENDMENTS
0	OCT - 2023	ORIGINAL VERSION

STANDARD PLANS

WESTERN CAPE GOVERNMENT
DEPARTMENT OF INFRASTRUCTURE
TRANSPORT INFRASTRUCTURE BRANCH

SUBSOIL DRAINAGE

TYPICAL DETAILS OF OUTLET STRUCTURES

SCALE : N.T.S.

A2 ORIGINAL

INDEX NO.
WCS/21/3/C4

PLAN NO.
SHEET 4 OF 4

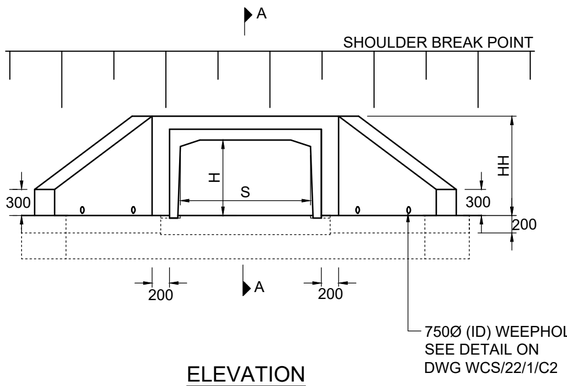

ELEVATION

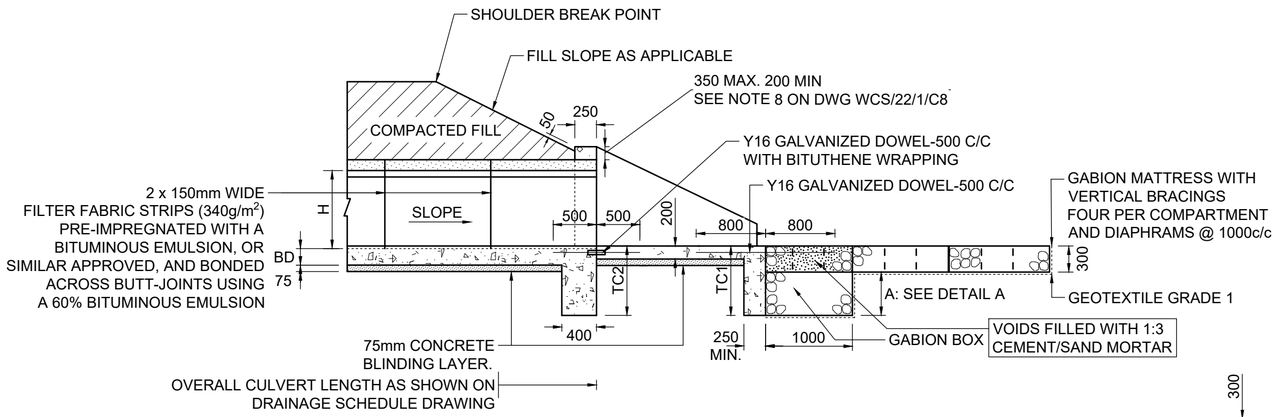

PART SECTION A-A

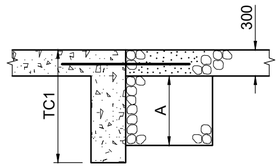

TC1 (mm)	PROTECTION DEPTH (A)(mm)
<800	0
800-1300	500
> 1300	1000

DETAIL A
GABION PROTECTION DEPTH

NOTES

- CUT OFF WALLS TC1 AND TC2 TO BE CONSTRUCTED AT BOTH INLET AND OUTLET SIDES REFER TO DWG No. WCS/22/1/D1
- GABION SCOUR PROTECTION TO BE CONSTRUCTION AT OUTLET ONLY. EXTENT OF INLET/OUTLET PROTECTION AS PER DWG NO. WCS/22/5/D1 UNLESS OTHERWISE SPECIFIED ON DRAINAGE SCHEDULE.

NOTATION :

H	:	CLEAR INTERNAL HEIGHT OF PORTAL
S	:	CLEAR INTERNAL SPAN OF PORTAL
W	:	TOTAL EXTERNAL WIDTH OF PORTAL
HH	:	HEADWALL HEIGHT
BW	:	BASE SLAB WIDTH
BD	:	BASE SLAB DEPTH
TC1	:	CUT-OFF WALL DEPTH AT END OF APRON SLAB
TC2	:	CUT-OFF WALL DEPTH AT END OF BASE SLAB
HF	:	HEIGHT OF FILL
WWH	:	WING WALL HEIGHT
FD	:	FOUNDATION DEPTH

THIS DRAWING, TOGETHER WITH DWG No. WCS/22/1/C2, TO BE READ IN CONJUNCTION WITH SECTION 2200 OF THE COLTO DOCUMENT "STANDARD SPECIFICATIONS FOR ROAD AND BRIDGE WORKS FOR STATE ROAD AUTHORITIES".

FOR TABULATIONS AND DESIGN NOTES, REFER TO DWG No. WCS/22/1/D1.

FOR SETTING OUT REFER TO DWG No. WCS/22/1/C7.

FOR GENERAL AND INSTALLATION NOTES, REFER TO DWG No WCS/22/1/C8.

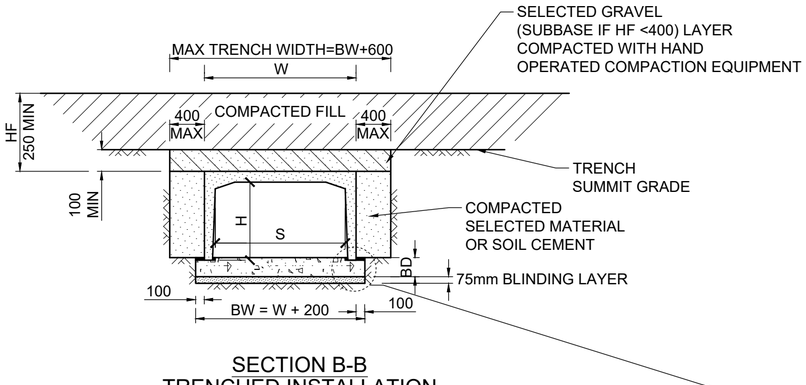

SECTION B-B
TRENCHED INSTALLATION

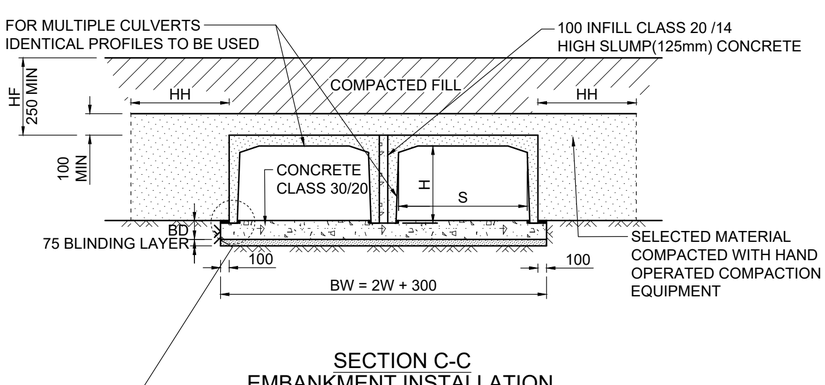

SECTION C-C
EMBANKMENT INSTALLATION

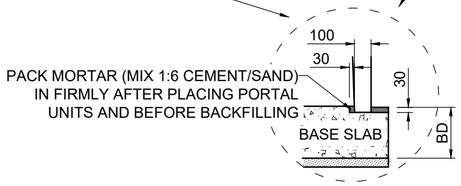

FOR H GREATER THAN 900 mm PROVIDE RECESS IN BASE SLAB AT ALL PORTAL LEG LOCATIONS AS SHOWN

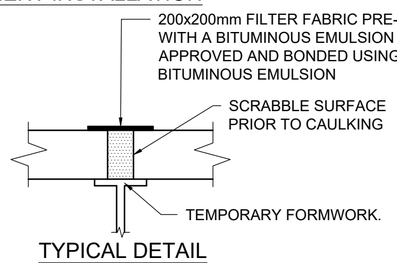

TYPICAL DETAIL
SEALING LIFTING HOLES

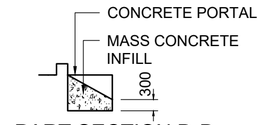

PART SECTION D-D

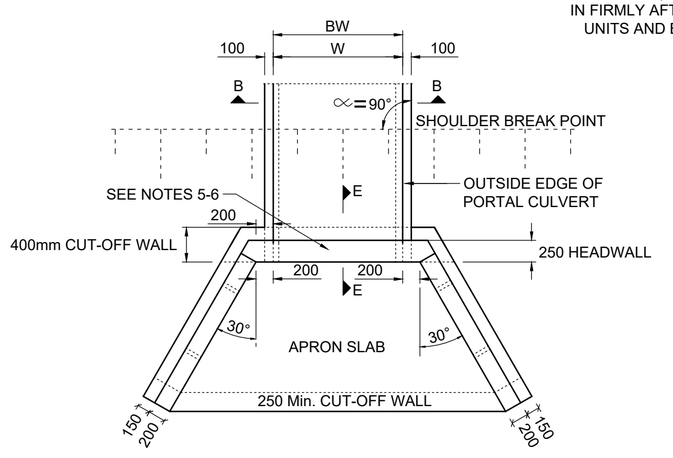

PART PLAN - SQUARE PORTAL CULVERT

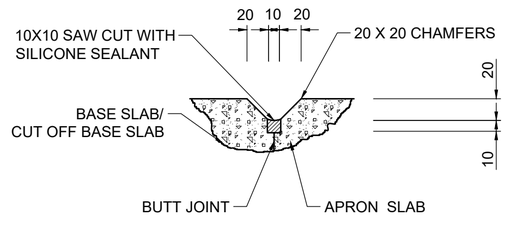

PART SECTION E-E
(BUTT JOINT)

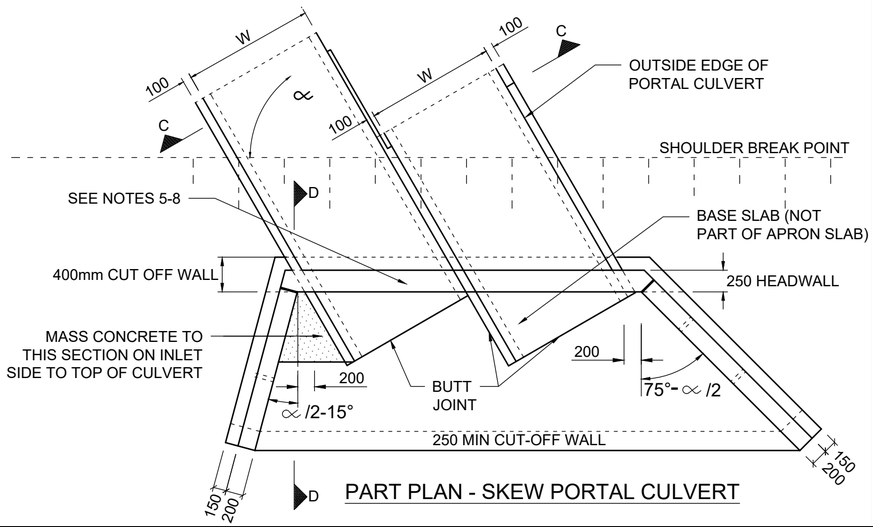

PART PLAN - SKEW PORTAL CULVERT

No.	DATE	ADDITIONS AND AMENDMENTS
0	OCT - 2023	ORIGINAL VERSION

STANDARD PLANS

WESTERN CAPE GOVERNMENT
DEPARTMENT OF INFRASTRUCTURE
TRANSPORT INFRASTRUCTURE BRANCH

PREFABRICATED CONCRETE RECTANGULAR PORTAL CULVERTS

INLET AND OUTLET DETAILS FOR
HEADWALL HEIGHTS (HH) NOT EXCEEDING 1,200m

SCALE : N.T.S.

A2 ORIGINAL

INDEX NO.
WCS/22/1/C1

PLAN NO.
SHEET 1 OF 8

FOR GENERAL AND INSTALLATION NOTES, REFER TO DWG No. WCS/22/1/C8.

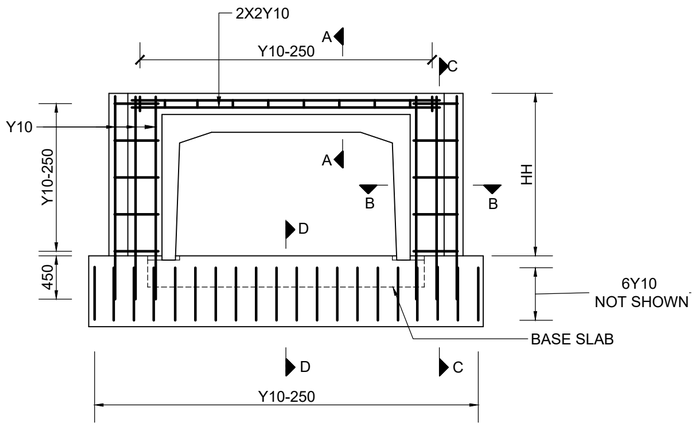

HEADWALL AND CUT-OFF WALL DETAIL

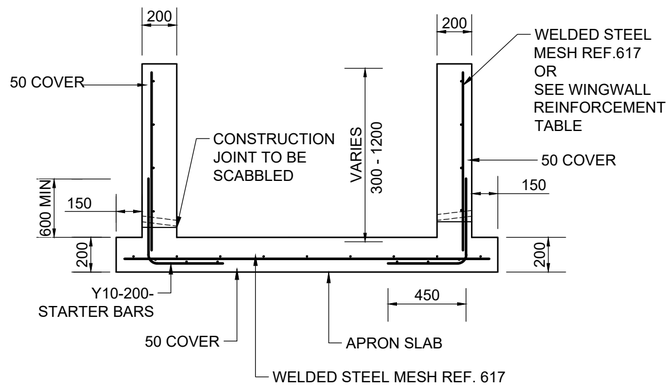

WINGWALL AND APRON SLAB DETAIL FOR HEADWALL HEIGHTS (HH) NOT EXCEEDING 1,200m

WINGWALL REINFORCEMENT	
WWH	VERTICAL STEEL
≤ 1200	Y10 - 250
ALL TRANSVERSE STEEL Y10-250 THROUGHOUT	

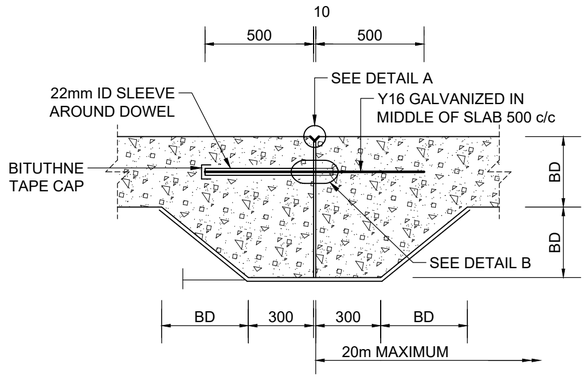

JOINTS IN BASE SLAB (TRANSVERSE)

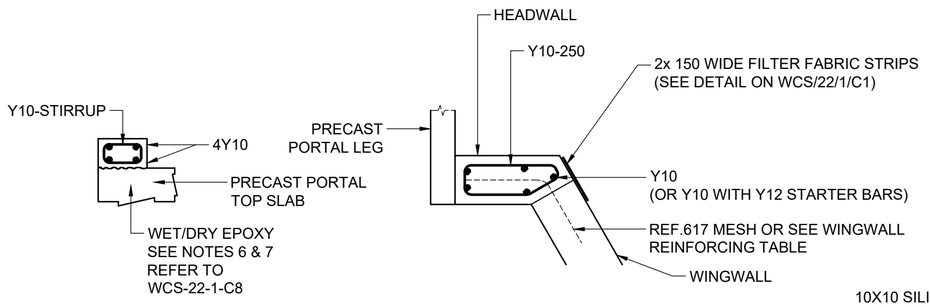

SECTION A-A

SECTION B-B

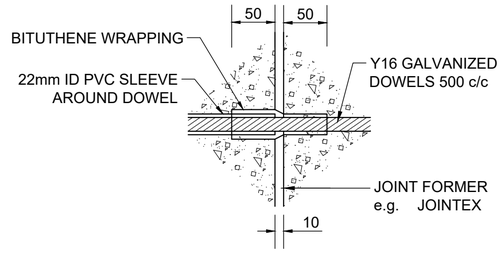

DETAIL B

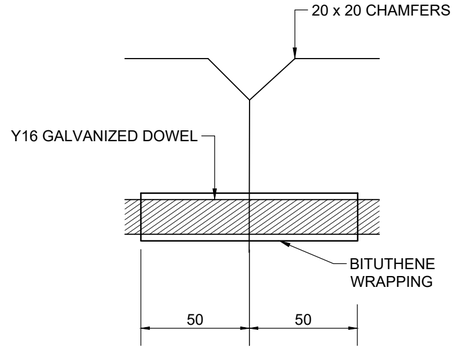

DETAIL C

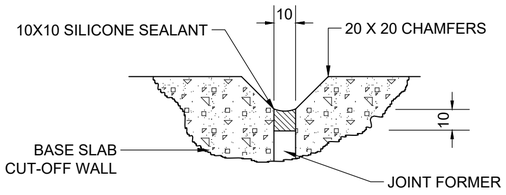

DETAIL A

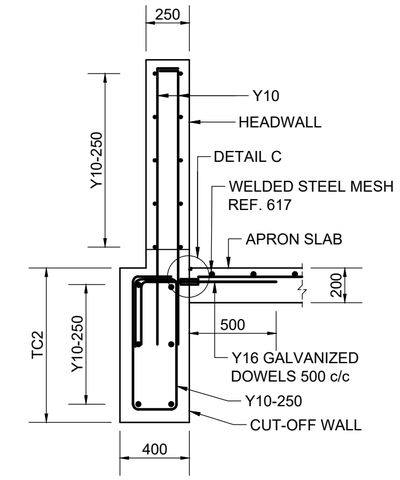

HEAD WALL AND CUT-OFF WALL DETAIL
SECTION C-C

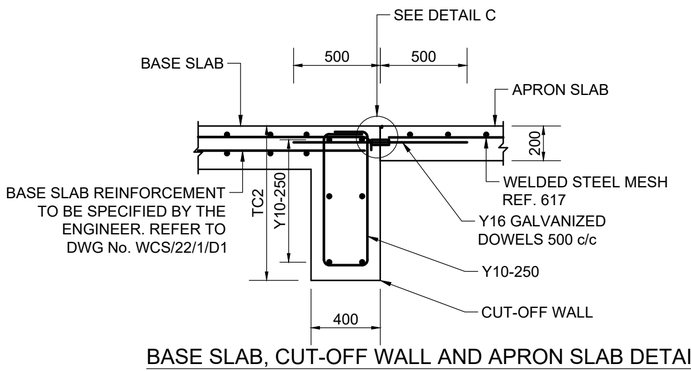

BASE SLAB, CUT-OFF WALL AND APRON SLAB DETAIL
SECTION D-D

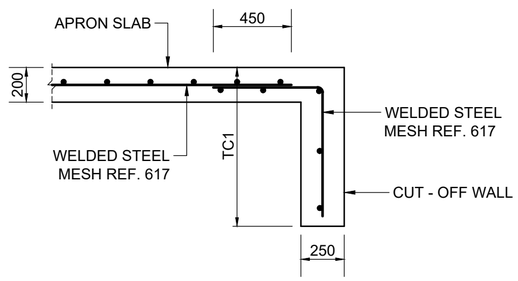

APRON SLAB AND CUT-OFF WALL DETAIL

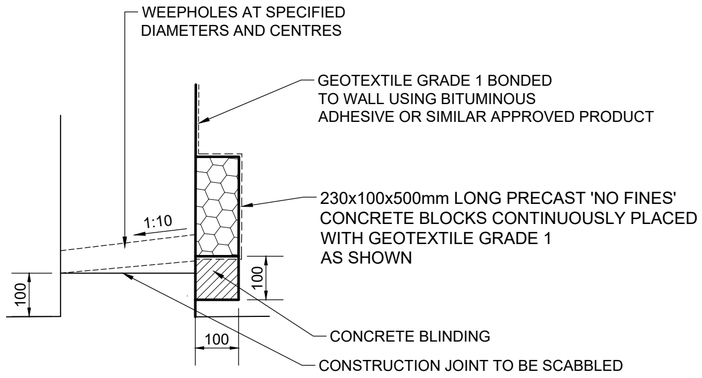

WEEPHOLE DETAIL

No.	DATE	ADDITIONS AND AMENDMENTS
0	OCT - 2023	ORIGINAL VERSION

STANDARD PLANS

WESTERN CAPE GOVERNMENT
DEPARTMENT OF INFRASTRUCTURE
TRANSPORT INFRASTRUCTURE BRANCH

PREFABRICATED CONCRETE RECTANGULAR PORTAL CULVERTS

REINFORCEMENT AND GENERAL DETAILS FOR
HEADWALL HEIGHTS (HH) NOT EXCEEDING 1,200m

SCALE : N.T.S.

A2 ORIGINAL

INDEX NO.
WCS/22/1/C2

PLAN NO.
SHEET 2 OF 8

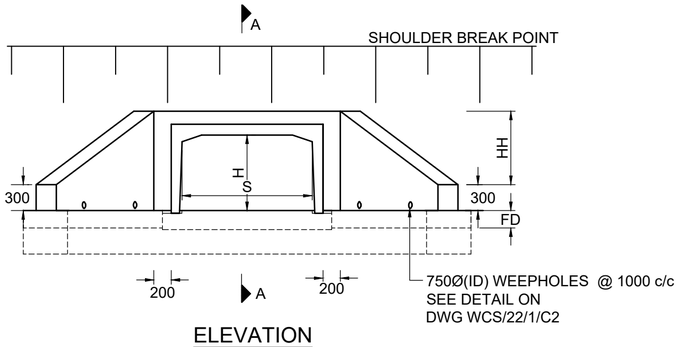

ELEVATION

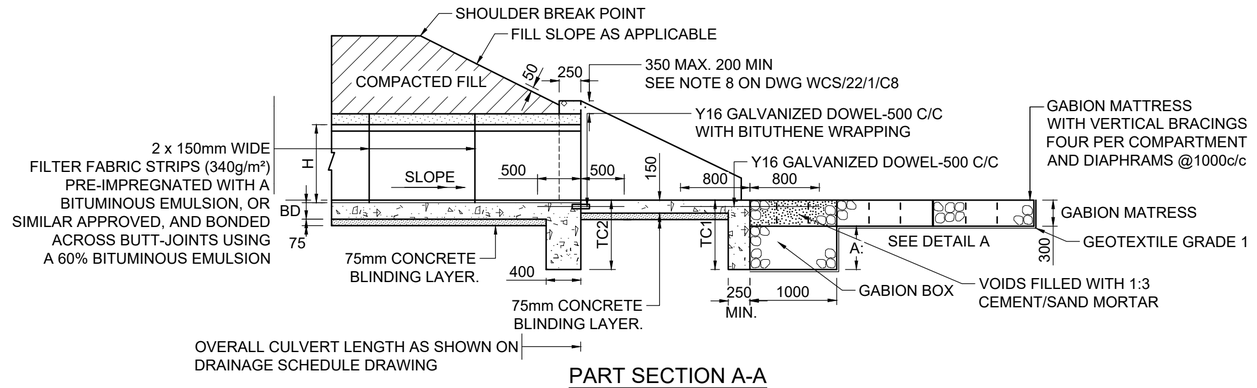

PART SECTION A-A

NOTES :

- CUT OFF WALLS TC1 AND TC2 TO BE CONSTRUCTED AT BOTH INLET AND OUTLET SIDES
  REFER TO DWG No. WCS/22/1/D1
- GABION SCOUR PROTECTION TO BE CONSTRUCTION AT OUTLET ONLY. EXTENT OF INLET/OUTLET PROTECTION AS PER DWG NO. WCS/22/5/D1 UNLESS OTHERWISE SPECIFIED ON DRAINAGE SCHEDULE.

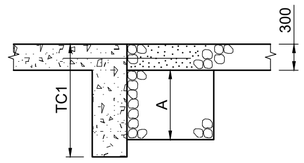

TC1	PROTECTION DEPTH (A)
<800	0
800-1300	500
> 1300	1000

DETAIL A
GABION PROTECTION DEPTH

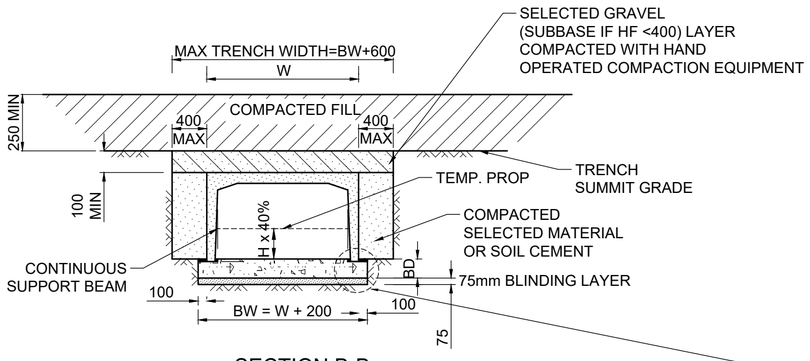

SECTION B-B
TRENCHED INSTALLATION

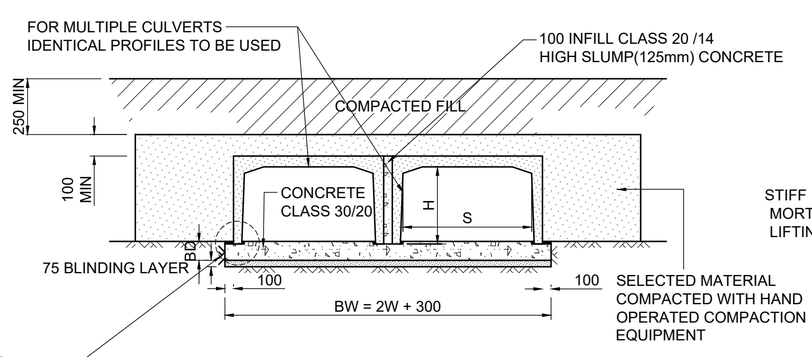

SECTION C-C
EMBANKMENT INSTALLATION

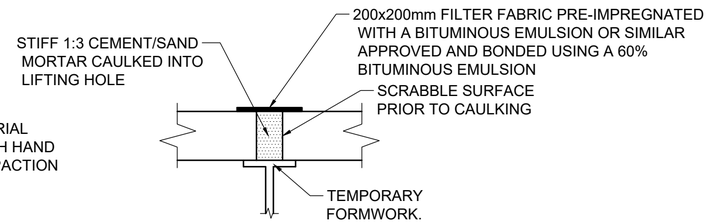

TYPICAL DETAIL
SEALING LIFTING HOLES

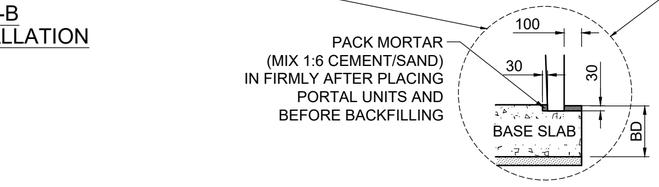

RECESS IN BASE SLAB AT ALL PORTAL
LEG LOCATIONS AS SHOWN

NOTE :TEMPORARY PROPPING

FOR H ⩾ 1.5m PROVIDE HORIZONTAL PROPS AT 40% HEIGHT ABOVE BASE DURING INFILL GROUTING, BACKFILLING AND COMPACTION. ONE PROP PER PRECAST UNIT

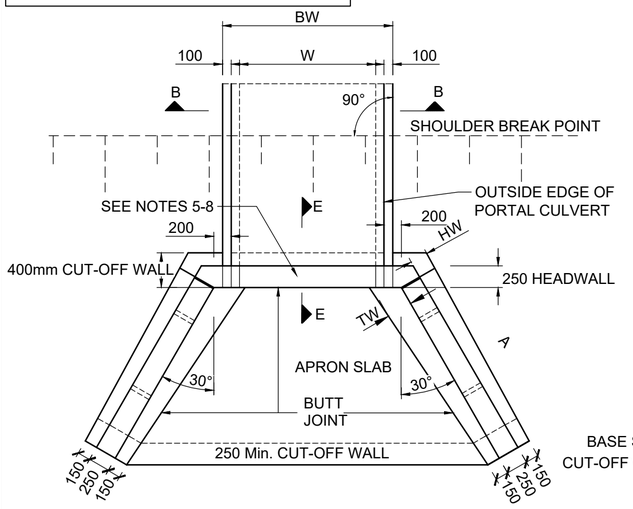

PART PLAN - SQUARE PORTAL CULVERT

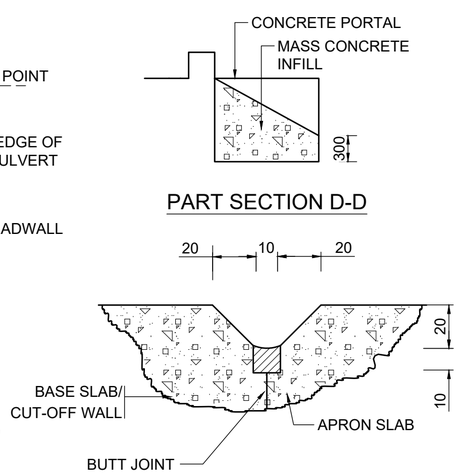

PART SECTION E-E
(BUTT JOINT)

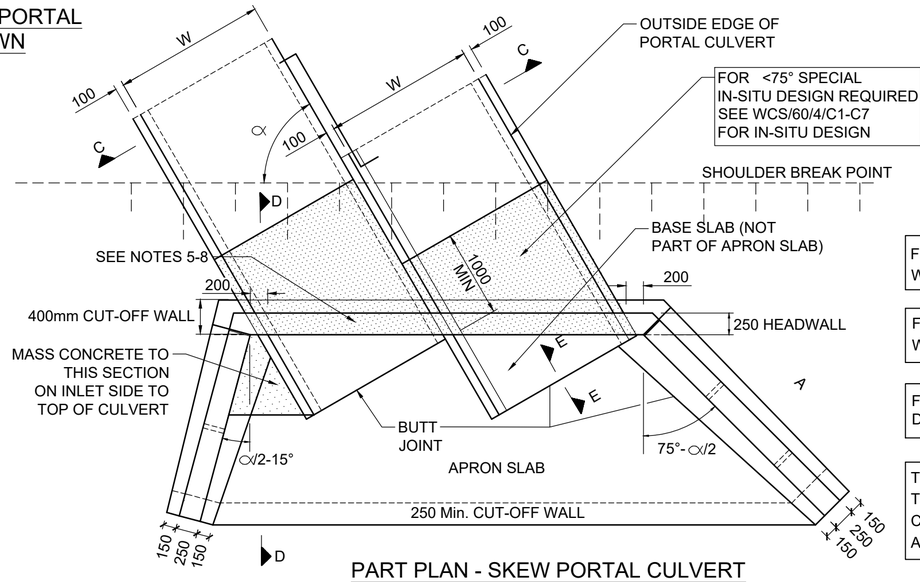

PART PLAN - SKEW PORTAL CULVERT

NOTATION

H	:	CLEAR INTERNAL HEIGHT OF PORTAL
S	:	CLEAR INTERNAL SPAN OF PORTAL
W	:	TOTAL EXTERNAL WIDTH OF PORTAL
W	:	TOTAL EXTERNAL WIDTH OF PORTAL
BW	:	BASE SLAB WIDTH
BD	:	BASE SLAB DEPTH
TC1	:	CUT-OFF WALL DEPTH AT END OF APRON SLAB
TC2	:	CUT-OFF WALL DEPTH AT END OF BASE SLAB
HF	:	HEIGHT OF FILL
WWH	:	WING WALL HEIGHT
FD	:	FOUNDATION DEPTH
TW	:	TOE WIDTH
HW	:	HEEL WIDTH

FOR TABULATIONS AND DESIGN NOTES, REFER TO DWG No. WCS/22/1/D1.

FOR GENERAL AND INSTALLATION NOTES, REFER TO DWG No. WCS/22/1/C8.

FOR WINGWALL FOUNDATION DIMENSIONS AND SETTING OUT DETAILS REFER TO DWG No. WCS/22/1/C7

THIS DRAWING, TOGETHER WITH DWG No. WCS/22/1/C4, TO BE READ IN CONJUNCTION WITH SECTION 2200 OF THE COLTO DOCUMENT "STANDARD SPECIFICATIONS FOR ROAD AND BRIDGE WORKS FOR STATE ROAD AUTHORITIES".

No.	DATE	ADDITIONS AND AMENDMENTS
0	OCT - 2023	ORIGINAL VERSION

STANDARD PLANS

WESTERN CAPE GOVERNMENT
DEPARTMENT OF INFRASTRUCTURE
TRANSPORT INFRASTRUCTURE BRANCH

PREFABRICATED CONCRETE RECTANGULAR PORTAL CULVERTS

INLET AND OUTLET DETAILS FOR HEADWALL HEIGHTS (HH) EXCEEDING 1,200m NOT EXCEEDING 1,800m

SCALE : N.T.S.

A2 ORIGINAL

INDEX NO. WCS/22/1/C3

PLAN NO. SHEET 3 OF 8

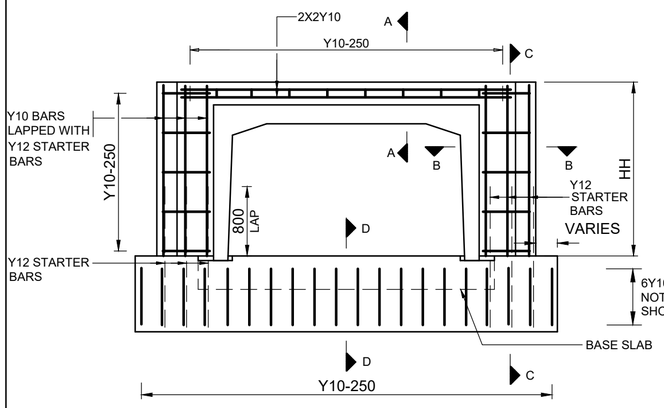

HEADWALL AND CUT-OFF WALL DETAIL

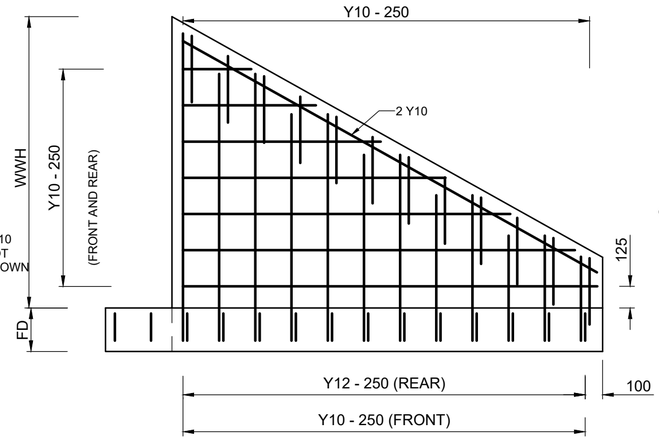

WINGWALL ELEVATION

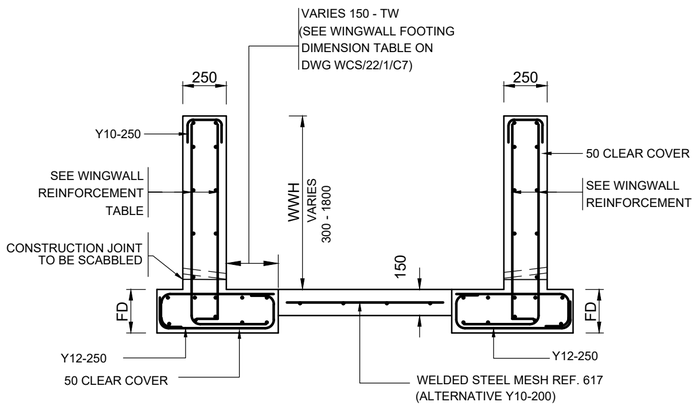

WINGWALL AND APRON SLAB DETAIL FOR HEADWALL HEIGHTS (HH) EXCEEDING 1,200m NOT EXCEEDING 1,800m

WINGWALL REINFORCEMENT			
WWH	FOOTING STEEL	VERTICAL REAR WALL STEEL	VERTICAL FRONT WALL STEEL
300 - 1800	Y12 - 250	Y12 - 250	Y10 - 250
ALL TRANSVERSE STEEL Y10-250 THROUGHOUT			

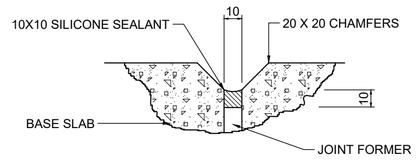

DETAIL A

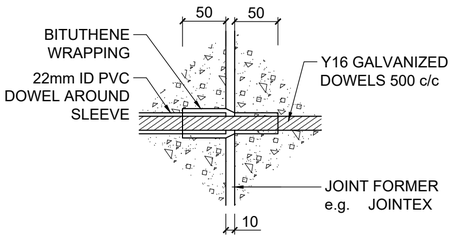

DETAIL B

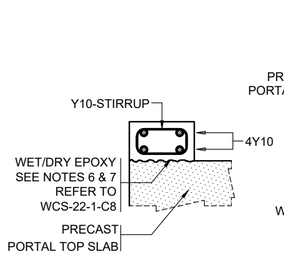

SECTION A-A

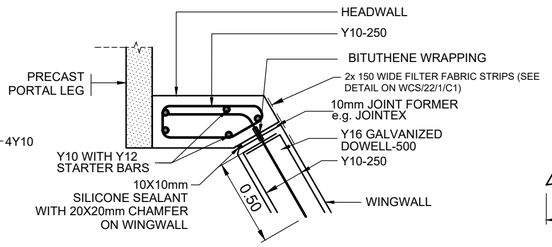

SECTION B-B

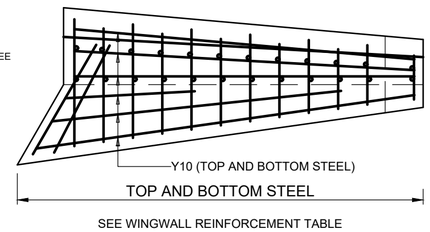

WINGWALL FOUNDATION PLAN

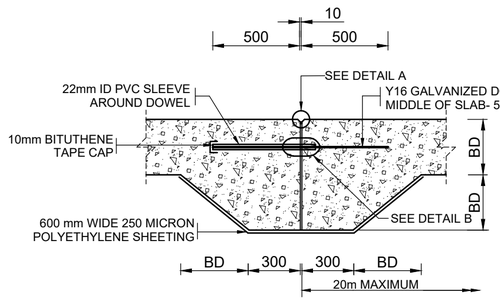

JOINTS IN BASE SLAB (TRANSVERSE)

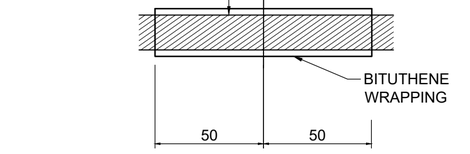

DETAIL C

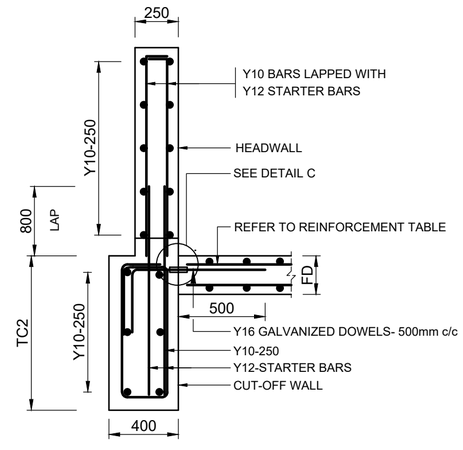

HEAD WALL AND CUT-OFF WALL DETAIL
SECTION C-C

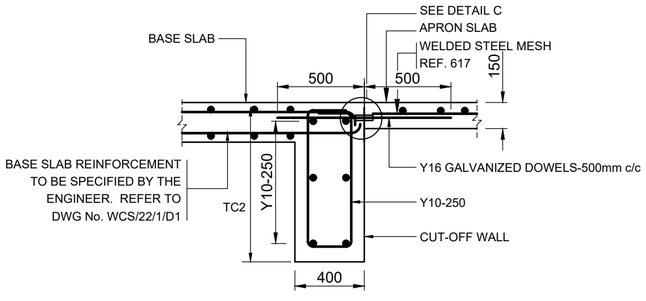

BASE SLAB, CUT-OFF WALL AND APRON SLAB DETAIL
SECTION D-D

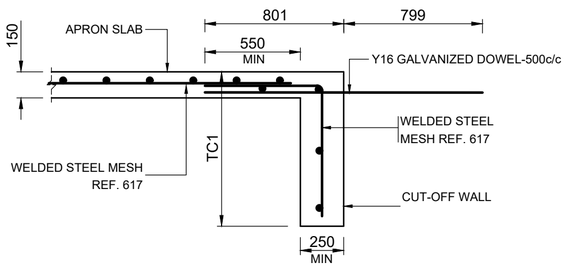

APRON SLAB AND CUT-OFF WALL DETAIL

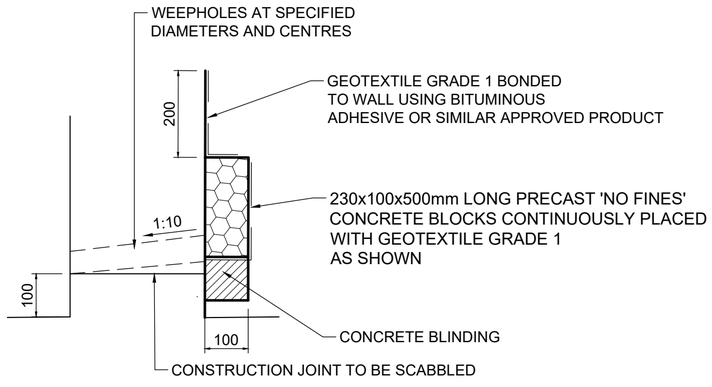

WEEPHOLE DETAIL

FOR GENERAL AND INSTALLATION NOTES, REFER TO DWG No. WCS/22/1/C8.

No.	DATE	ADDITIONS AND AMENDMENTS
0	OCT - 2023	ORIGINAL VERSION

STANDARD PLANS

WESTERN CAPE GOVERNMENT
DEPARTMENT OF INFRASTRUCTURE
TRANSPORT INFRASTRUCTURE BRANCH

PREFABRICATED CONCRETE RECTANGULAR PORTAL CULVERTS

REINFORCEMENT AND GENERAL DETAILS FOR HEADWALL HEIGHTS (HH) EXCEEDING 1,200m NOT EXCEEDING 1,800m

SCALE : N.T.S.

A2 ORIGINAL

INDEX NO. WCS/22/1/C4

PLAN NO. SHEET 4 OF 8

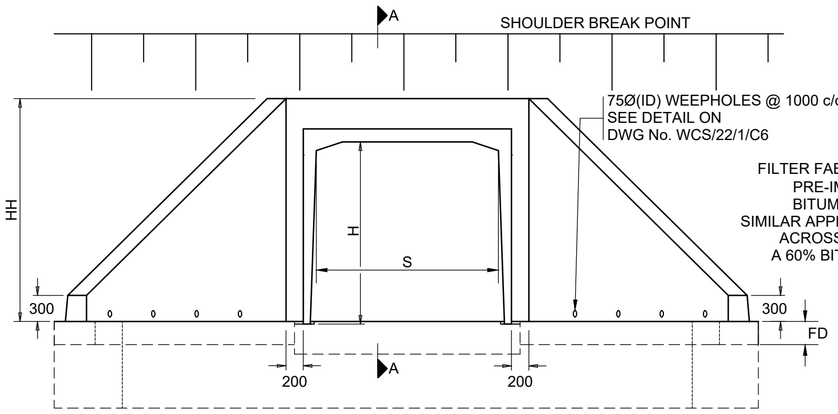

ELEVATION

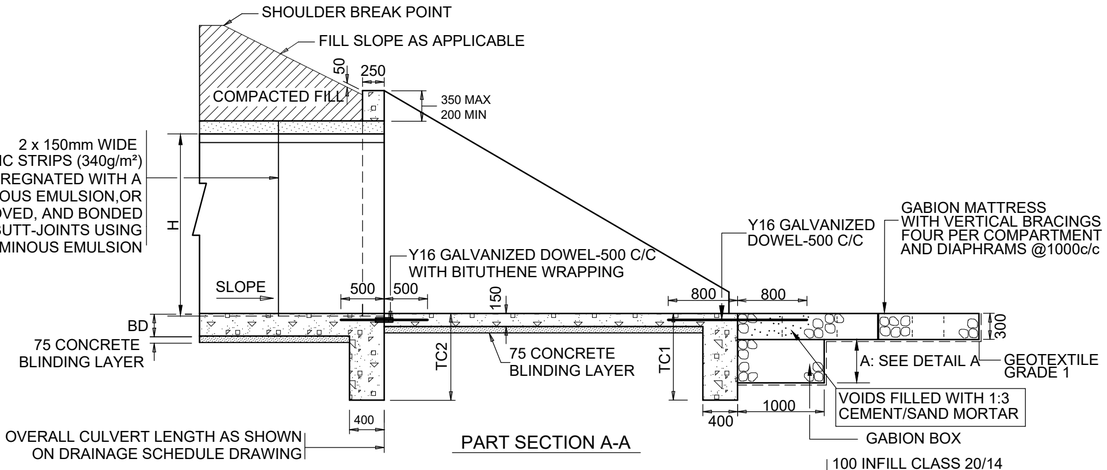

PART SECTION A-A

NOTES :

- CUT OFF WALLS TC1 AND TC2 TO BE CONSTRUCTED AT BOTH INLET AND OUTLET SIDES
- REFER TO DWG No. WCS/22/1/D1 GABION SCOUR PROTECTION TO BE CONSTRUCTION AT OUTLET ONLY. EXTENT OF INLET/OUTLET PROTECTION AS PER DWG NO. WCS/22/5/D1 UNLESS OTHERWISE SPECIFIED ON DRAINAGE SCHEDULE.

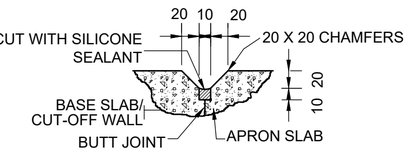

PART SECTION E-E
(BUTT JOINT)

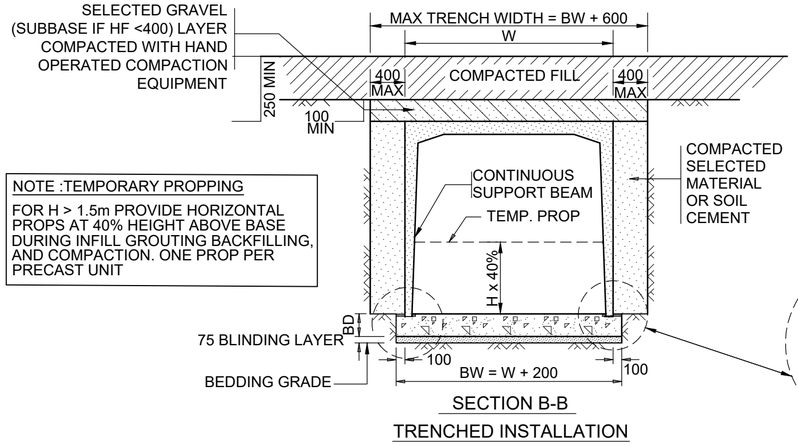

NOTE :TEMPORARY PROPPING

FOR H > 1.5m PROVIDE HORIZONTAL PROPS AT 40% HEIGHT ABOVE BASE DURING INFILL GROUTING BACKFILLING, AND COMPACTION. ONE PROP PER PRECAST UNIT

SECTION B-B
TRENCHED INSTALLATION

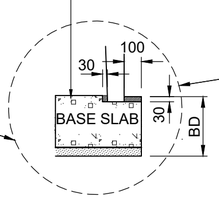

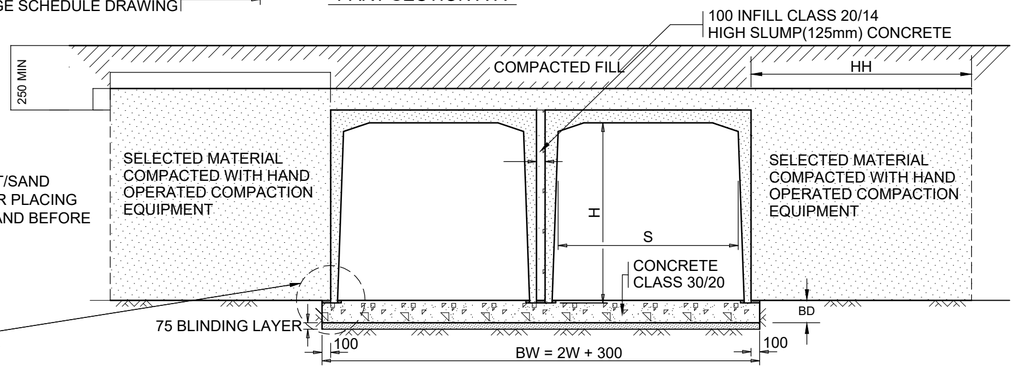

SECTION C-C
EMBANKMENT INSTALLATION

NOTATION

H	:	CLEAR INTERNAL HEIGHT OF PORTAL
S	:	CLEAR INTERNAL SPAN OF PORTAL
W	:	TOTAL EXTERNAL WIDTH OF PORTAL
HH	:	HEADWALL HEIGHT
BW	:	BASE SLAB WIDTH
BD	:	BASE SLAB DEPTH
TC1	:	CUT-OFF WALL DEPTH AT END OF APRON SLAB
TC2	:	CUT-OFF WALL DEPTH AT END OF BASE SLAB
HF	:	HEIGHT OF FILL
WWH	:	WING WALL HEIGHT
FD	:	FOUNDATION DEPTH
TW	:	TOE WIDTH
HW	:	HEEL WIDTH

THIS DRAWING, TOGETHER WITH DWG No. WCS/22/1/C6, TO BE READ IN CONJUNCTION WITH SECTION 2200 OF THE COLTO DOCUMENT "STANDARD SPECIFICATIONS FOR ROAD AND BRIDGE WORKS FOR STATE ROAD AUTHORITIES".

FOR GENERAL AND INSTALLATION NOTES, REFER TO DWG No. WCS/22/1/C8.

FOR TABULATIONS AND DESIGN NOTES, REFER TO DWG No. WCS/22/1/D1.

FOR WINGWALL FOUNDATION DIMENSIONS AND SETTING OUT DETAILS REFER TO DWG No. WCS/22/1/C7

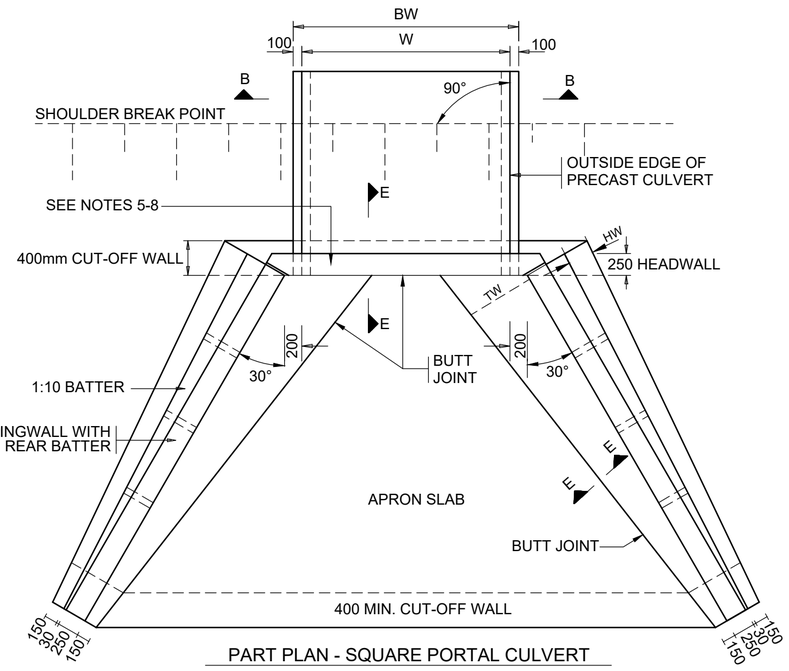

PART PLAN - SQUARE PORTAL CULVERT

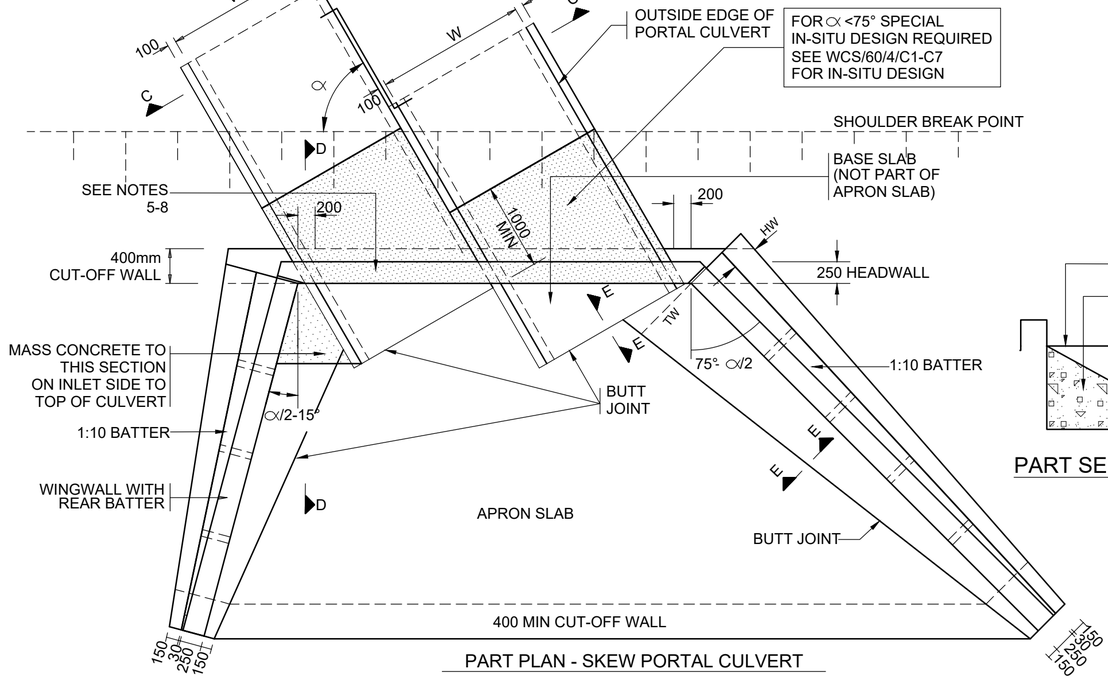

PART PLAN - SKEW PORTAL CULVERT

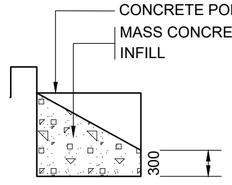

PART SECTION D-D

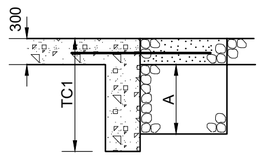

TC1	PROTECTION DEPTH(A)
<800	0
800-1300	500
> 1300	1000

DETAIL A
GABION PROTECTION DEPTH

No.	DATE	ADDITIONS AND AMENDMENTS
0	OCT - 2023	ORIGINAL VERSION

STANDARD PLANS

WESTERN CAPE GOVERNMENT
DEPARTMENT OF INFRASTRUCTURE
TRANSPORT INFRASTRUCTURE BRANCH

PREFABRICATED CONCRETE RECTANGULAR PORTAL CULVERTS

INLET AND OUTLET DETAILS FOR HEADWALL HEIGHTS (HH) EXCEEDING 1,800m NOT EXCEEDING 3.600m

SCALE : N.T.S.

A2 ORIGINAL

INDEX NO.
WCS/22/1/C5

PLAN NO.
SHEET 5 OF 8

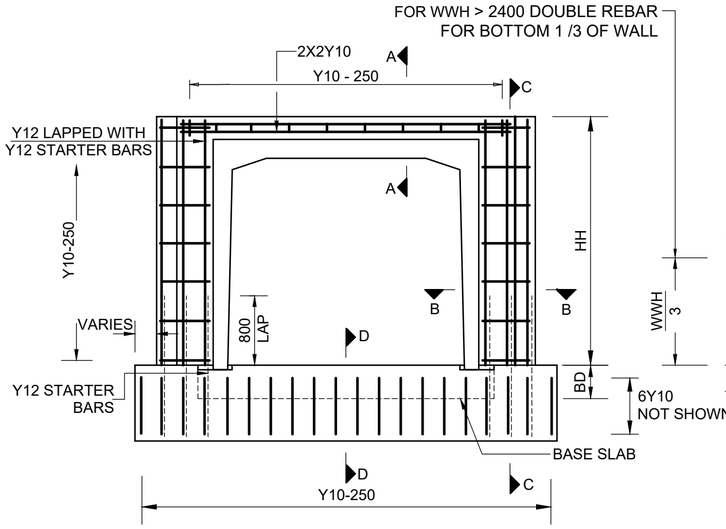

HEADWALL AND CUT-OFF WALL DETAIL

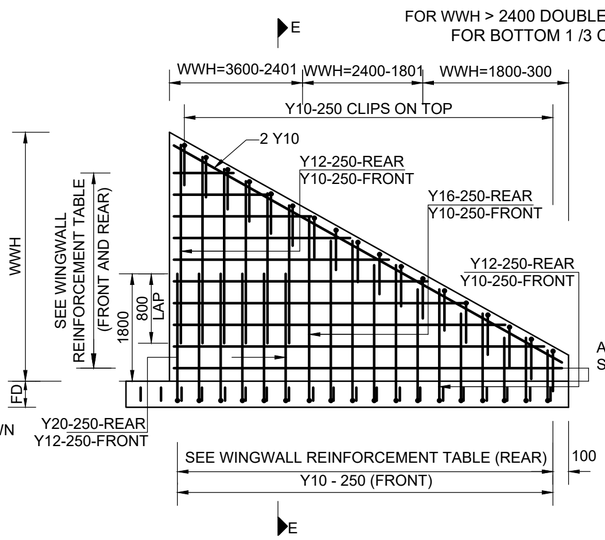

WINGWALL ELEVATION

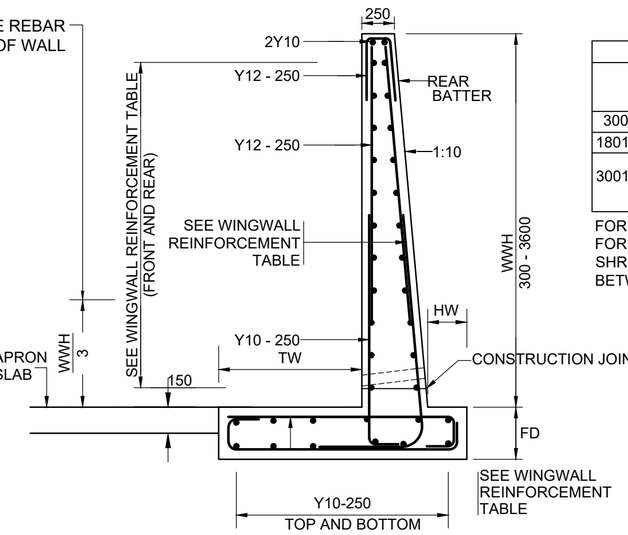

SECTION E-E

WINGWALL REINFORCEMENT				
WWH	VERTICAL REAR WALL STEEL	FOOTING TOP STEEL	FOOTING BOTTOM STEEL	TRANSVERSE STEEL
300 - 1800	Y12 - 250	Y12 - 250	Y12 - 250	Y12 - 250
1801 - 3000	Y16 - 250	Y12 - 250	Y16 - 250	Y12 - 250
3001 - 3600	Y20 - 250 STARTER BARS LAPPED WITH Y12 - 250	Y16 - 250	Y16 - 250	Y12 - 250

FOR WWH > 2.4M THE TRANSVERSE STEEL TO BE DOUBLED FOR THE BOTTOM 1/3 OF THE WWH SO AS TO AVOID SHRINKAGE CRACKS DUE TO THE RESTRAINT ACTION BETWEEN THE WINGWALL AND THE FOUNDATION.

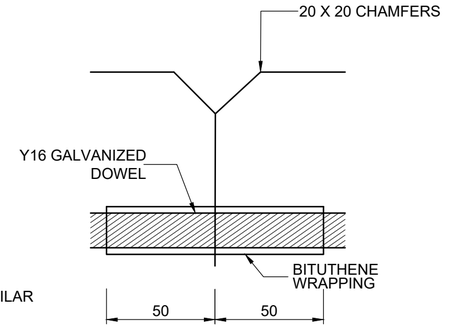

DETAIL C

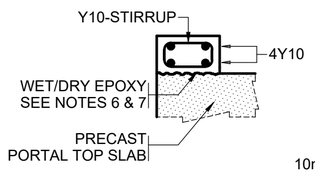

SECTION A-A

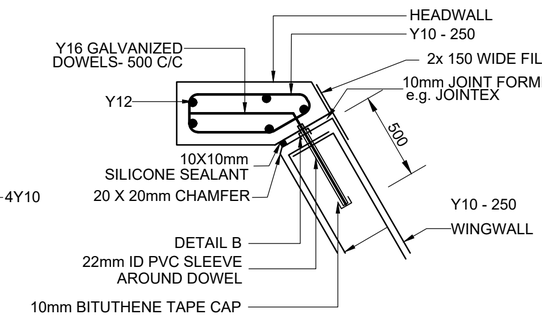

SECTION B-B

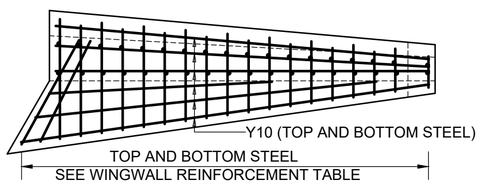

WINGWALL FOUNDATION PLAN

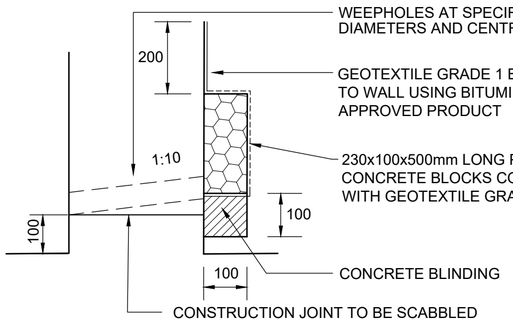

WEEPHOLE DETAIL

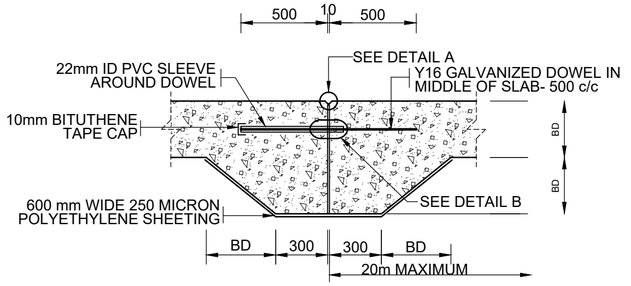

JOINTS IN BASE SLAB
(TRANSVERSE)

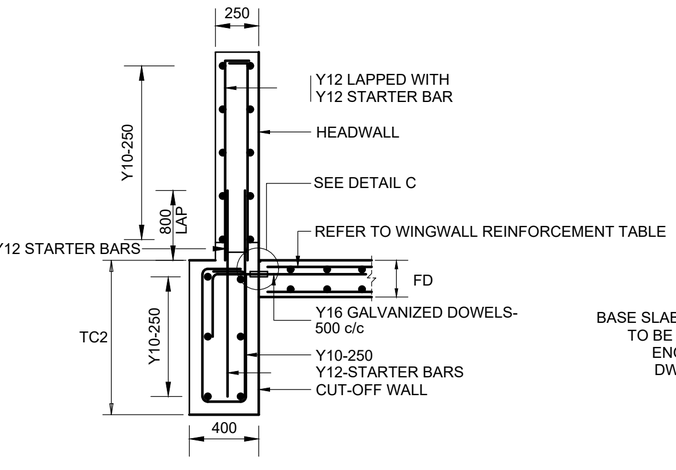

HEADWALL AND CUT-OFF WALL DETAIL
SECTION C-C

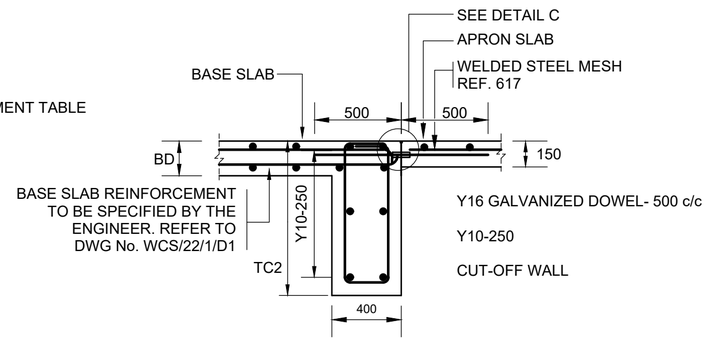

BASE SLAB, CUT-OFF WALL AND APRON SLAB DETAIL
SECTION D-D

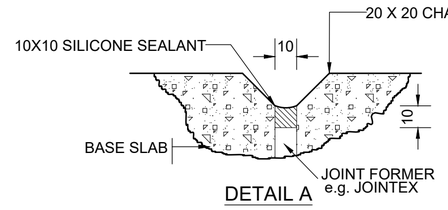

DETAIL A

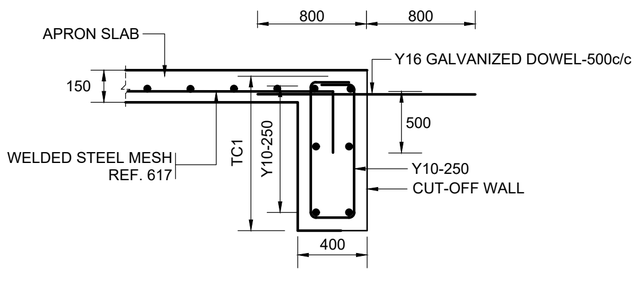

APRON SLAB AND CUT-OFF WALL DETAIL

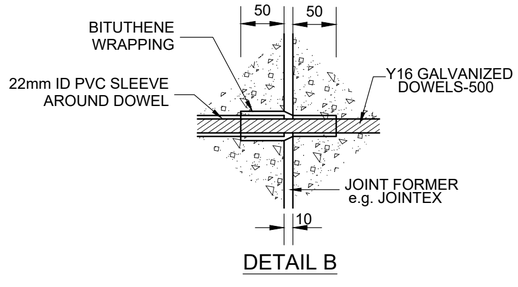

DETAIL B

FOR GENERAL NOTES AND INSTALLATION NOTES, REFER TO DWG No. WCS/22/1/C8.

No.	DATE	ADDITIONS AND AMENDMENTS
0	OCT - 2023	ORIGINAL VERSION

STANDARD PLANS

WESTERN CAPE GOVERNMENT
DEPARTMENT OF INFRASTRUCTURE
TRANSPORT INFRASTRUCTURE BRANCH

PREFABRICATED CONCRETE RECTANGULAR PORTAL CULVERTS

REINFORCEMENT AND GENERAL DETAILS FOR HEADWALL HEIGHTS (HH) EXCEEDING 1,800m NOT EXCEEDING 3,600m

SCALE : N.T.S.

A2 ORIGINAL

INDEX NO. WCS/22/1/C6

PLAN NO. SHEET 6 OF 8

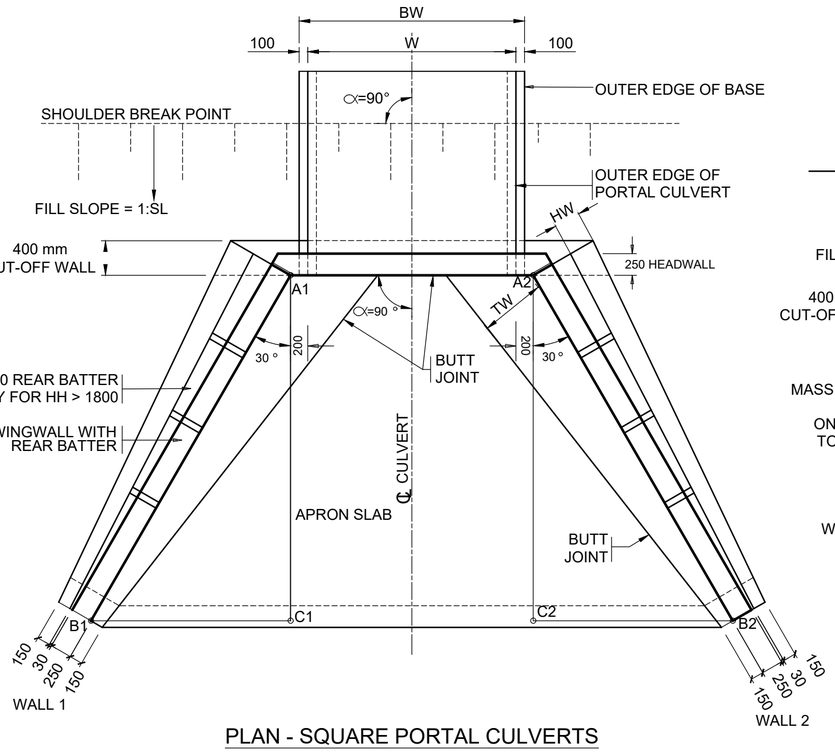

PLAN - SQUARE PORTAL CULVERTS

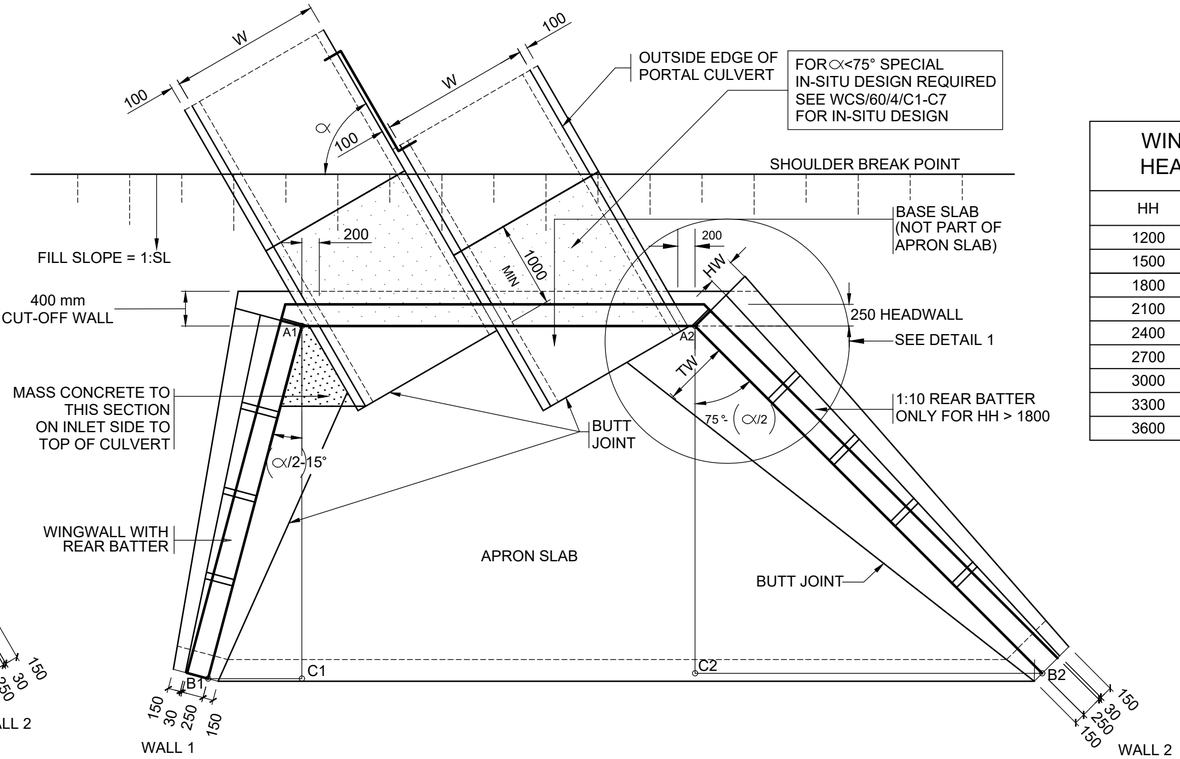

PLAN - SKEW PORTAL CULVERTS

WINGWALL FOUNDATION DIMENSIONS FOR HEADWALL HEIGHTS 1200-3600 mm				
HH	HW	TW	FD	SOIL PRESSURE (kPa)
1200	150	600	225	150
1500	200	650	225	
1800	200	700	250	
2100	250	750	250	175
2400	250	800	250	
2700	300	850	300	200
3000	500	900	350	
3300	650	950	400	250
3600	800	1000	450	

NOTE :
WHERE CULVERT STRUCTURE NUMBERS ARE REQUIRED REFER TO DWG WCS/60/8/D1

FOR GENERAL AND INSTALLATION NOTES, REFER TO DWG No. WCS/22/1/C8.

NOTATION:

HH : HEADWALL HEIGHT
HW : HEEL WIDTH
TW : TOE WIDTH
FD : FOUNDATION DEPTH
W : EXTERNAL WIDTH OF PORTAL

SETTING OUT CALCULATIONS (SQUARE CULVERTS):	SETTING OUT CALCULATIONS (SKEW CULVERTS):	CALCULATED EXAMPLE (SQUARE CULVERTS):	CALCULATED EXAMPLE (SKEW CULVERTS):
1) CALCULATE SLOPE OF TOP OF WINGWALL: FILL SLOPE = 1:SL WALL1: SL1= SL/cos 30° WALL2: SL2= SL/cos 30°	$SL1 = \frac{SL}{COS((\alpha/2)-15)}$ $SL2 = \frac{SL}{COS(75-(\alpha/2))}$	SL= 1.5; H1= 3.00; H2= 0.30; ∝ = 90° SL1= 1.732 SL2= 1.732	SL= 1.5; H1= 3.00; H2= 0.30; ∝ = 60° SL1= 1.553 SL2= 2.121
2) CALCULATE LENGTH OF WINGWALL: H1 = WINGWALL HEIGHT AT HEADWALL H2 = WINGWALL HEIGHT AT CUT-OFF WALL (NORMALLY 300mm) WALL1: A1B1= (H1-H2)SL1 WALL2: A2B2= (H1-H2)SL2	WALL1: A1B1= (H1-H2)SL1 WALL2: A2B2= (H1-H2)SL2	A1B1= 4.676m A2B2= 4.676m	A1B1= 4.193m A2B2= 5.727m
3) CALCULATE SETTING OUT OF WINGWALL: WALL1: A1C1= A1B1 cos 30° C1B1= A1B1 sin 30 WALL2: A2C2= A2B2 cos 30° C2B2= A2B2 sin 30	A1C1= A1B1 COS ((∝/2)-15) C1B1= A1B1 SIN ((∝/2)-15) A2C2= A2B2 COS (75-(∝/2)) C2B2= A2B2 SIN (75-(∝/2))	A1C1= 4.050m C1B1= 2.338m A2C2= 4.050m C2B2= 2.338m	A1C1= 4.050m C1B1= 1.085m A2C2= 3.728m C2B2= 4.050m

∝	(∝/2) - 15	75° - (∝/2)
90	30	30
80	25	35
70	20	40
60	15	45
50	10	50
40	5	55
30	0	60

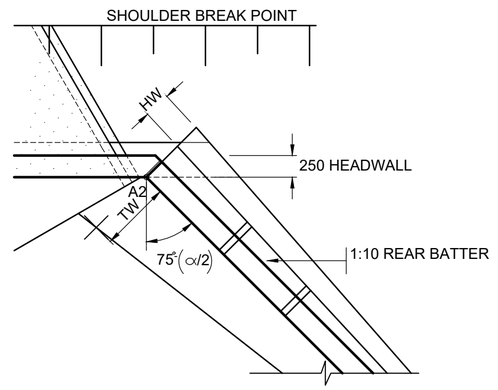

DETAIL 1

No.	DATE	ADDITIONS AND AMENDMENTS
0	OCT - 2023	ORIGINAL VERSION

STANDARD PLANS

WESTERN CAPE GOVERNMENT
DEPARTMENT OF INFRASTRUCTURE
TRANSPORT INFRASTRUCTURE BRANCH

PREFABRICATED CONCRETE RECTANGULAR PORTAL CULVERTS

GENERAL DETAILS OF WINGWALLS AND SETTING OUT

SCALE : N.T.S.

A2 ORIGINAL

INDEX NO. WCS/22/1/C7

PLAN NO. SHEET 7 OF 8

INSTALLATION NOTES :

A. WHERE THE BEDDING GRADE REVEALS OBJECTIONABLE MATERIAL OR MATERIAL NOT UNIFORMLY FIRM, THE BEDDING GRADE SHALL BE EXCAVATED DEEPER INTO THE MATERIAL. THE DEPTH OF ADDITIONAL EXCAVATION SHALL NOT BE LESS THAN 200mm AND, IN ADDITION, ALL POCKETS OF UNSTABLE OR POOR FOUNDATION MATERIAL SHALL BE REMOVED TO A DEPTH OF NOT LESS THAN ONE METRE. EXCAVATIONS ADDITIONALLY EXECUTED SHALL BE BACKFILLED WITH SELECTED MATERIAL, PROPERLY COMPACTED TO PROVIDE A FIRM FOUNDATION.

B. SELECTED MATERIAL TO BE USED FOR BACKFILLING SHALL BE GRAVEL, OR 26mm WELL-GRADED CRUSHED STONE OR OTHER APPROVED MATERIAL CONTAINING NO MORE SILT OR CLAY THAN IS NECESSARY TO PROVIDE A DENSE AND STABLE FILLING. THE MATERIAL SHALL BE PLACED AT OPTIMUM MOISTURE CONTENT IN LAYERS EACH OF MAXIMUM THICKNESS 150mm AND COMPACTED TO AT LEAST 90% MAX DRY DENSITY FOR GRANULAR MATERIALS, OR THE DENSITY REQUIRED FOR ADJOINING LAYERS.

C. ALTERNATIVELY, A WET MIXTURE OF SOIL CEMENT MAY BE USED FOR PORTAL BACKFILLING. THE MIXTURE SHALL CONSIST OF AN APPROVED SOIL OR GRAVEL MIXED WITH 5% (BY MASS) OF PORTLAND CEMENT AND ONLY SUFFICIENT WATER TO GIVE A CONSISTENCY THAT WILL PERMIT THE SOIL CEMENT TO BE PLACED WITH VIBRATORS SO THAT ALL VOIDS BE PROPERLY FILLED. THE AGGREGATE USED FOR SOIL CEMENT SHALL PREFERABLY BE A SANDY MATERIAL BUT MAY CONTAIN LARGER PARTICLES UP TO 38mm, AND IT SHALL NOT HAVE A P.I. EXCEEDING 10.

D. BACKFILLING SHALL BE CARRIED OUT SIMULTANEOUSLY AND EQUALLY ON BOTH SIDES OF A CULVERT TO PREVENT UNEQUAL LATERAL FORCES FROM OCCURING.

GENERAL NOTES :

1. MATERIAL SPECIFICATIONS:

   - CONCRETE CLASS : 30/20 OR AS SPECIFIED
   - MINIMUM CEMENTITIOUS CONTENT : 300 kg/m THROUGHOUT.
   - GABIONS AND GEOTEXTILE : AS SPECIFIED
     DWG No. WCS/52/1/C1 + C2.
   - STEEL REINFORCEMENT : HIGH TENSILE STEEL 450 MPa.
   - WELDED STEEL MESH : HIGH TENSILE STEEL 485 MPa.
   - WELDED STEEL MESH REINFORCEMENT TO CONFORM TO SANS 1024.
   - FOR PRECAST UNITS: SEE DESIGN NOTES ON DWG No. WCS/22/1/D1.

2. CONCRETE FINISH

   - NON VISIBLE SURFACES F1
   - VISIBLE SURFACES F2
   - UNIFORMED SURFACES U2

3. ALL EXPOSED SHARP EDGES TO HAVE 20 x 20mm CHAMFERS.

4. MINIMUM CONCRETE COVER = 50mm.

5. HEADWALL TO BE 50mm ABOVE THE FILL SLOPE AND NOT MORE THAN 50mm ABOVE THE SHOULDER BREAK POINT.

6. BEFORE CASTING OF HEADWALL, SCABBLE AND WIRE BRUSH PRECAST PORTAL HEADWALL CONTACT AREA TO REMOVE ALL LAITANCE.

7. BOND HEADWALL TO PRECAST PORTAL SECTION WITH WET TO DRY EPOXY

8. HEADWALLS HIGHER THAN 350mm TO BE ANCHORED TO CULVERT TOP SLAB BY MEANS OF STEEL DOWELS.

9. THE NECESSITY AS WELL AS THE EXTENT OF GABION MATTRESS PROTECTION TO BE SPECIFIED BY THE ENGINEER. REFER TO DWG No. WCS/22/6/D1.

10. CUT-OFF WALLS TO FORM AN INTEGRAL PART OF APRON OR BASE SLABS.

11. CUT-OFF WALL DEPTHS, BASE SLAB DEPTHS AND BASE SLAB STEEL REINFORCEMENT AS WELL AS PERMISSIBLE FILL HEIGHT (HF) TO BE SPECIFIED BY THE ENGINEER. REFER TO DWG No. WCS/22/1/D1.

12. FOR REINFORCEMENT DETAILS OF HEADWALLS, WINGWALLS, APRON SLABS AND CUT-OFF WALLS REFER TO DWGS No. WCS/22/1/C2 OR WCS/22/1/C4 OR WCS/22/1/C6.

No.	DATE	ADDITIONS AND AMENDMENTS
0	OCT - 2023	ORIGINAL VERSION

STANDARD PLANS

WESTERN CAPE GOVERNMENT
DEPARTMENT OF INFRASTRUCTURE
TRANSPORT INFRASTRUCTURE BRANCH

PREFABRICATED CONCRETE RECTANGULAR PORTAL CULVERTS

INSTALLATION AND GENERAL NOTES

SCALE : N.T.S.

A2 ORIGINAL

INDEX NO.
WCS/22/1/C8

PLAN NO.
SHEET 8 OF 8

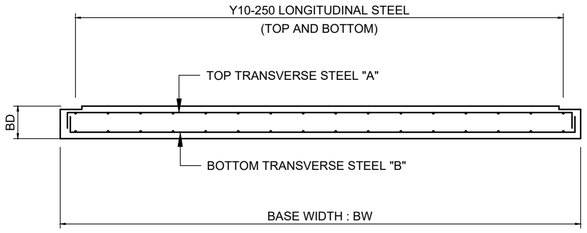

CLEAR COVER = 50mm

500mm LAP REQUIRED FOR Y10 LONGITUDINAL STEEL

PROVIDE CHAIRS TO SUPPORT TOP STEEL GRID AS REQUIRED

DETAILS OF IN-SITU BASE SLAB (SEE TABLE 1)

CUT-OFF WALLS

(SEE TABLE 2a AND 2b)

CUT-OFF DIMENSIONS (FOR PROTECTION AGAINST PIPING) ARE BASED ON "SOIL MECHANICS IN ENGINEERING PRACTISE" BY TERZAGHI & PECK

$T = (C_W \times H) - B/3$

WHERE T = TOTAL OF CUT-OFF VERTICAL FACE DEPTHS REQUIRED AGAINST PIPING
H = WATER HEAD : (DIFFERENCE BETWEEN INLET AND OUTLET FLOW PROFILE WITH INLET OPERATING AT 1,5 HT)
B = HORIZONTAL DISTANCE COMPONENT OF LINE OF CREEP FOR STRUCTURE (ASSUMED AT 15,0 METRES).
HORIZONTAL SECTION OF LINE OF CREEP ASSUMED 1/3 AS EFFECTIVE AS A VERTICAL SECTION OF THE SAME LENGTH.
C_W = WEIGHTED CREEP RATIO (SEE TABLE)

MATERIAL	C_W
VERY FINE SAND/SILT	8.5
FINE SAND	7.0
MEDIUM SAND	6.0
COARSE SAND	5.0
FINE GRAVEL	4.0
MEDIUM GRAVEL	3.5
COARSE GRAVEL/COBBLES	3.0
BOULDERS (COBBLES & GRAVEL)	2.5

DESIGN NOTES:

PRECAST RECTANGULAR PORTAL CULVERTS AND WINGWALLS:

1. PRECAST RECTANGULAR PORTAL CULVERTS TO COMPLY TO LATEST VERSION OF SANS 986:2006.

- THE MINIMUM CLEAR COVER TO STEEL REINFORCEMENT IS 25mm, UNLESS GREATER COVER IS SPECIFIED BY THE ENGINEER.

2. DESIGN LOADS:

- IN ACCORDANCE WITH TMH7 PART 1 AND 2
- NA, NB36 AND NC APPLIES
- TYPE 1 SOIL APPLIES
- MAXIMUM SLOPE OF BACKFILL IS 1:2

3. THE PERMISSIBLE FILL HEIGHTS TABULATED SATISFY THE FOLLOWING REQUIREMENTS:

- COMPLY FOR EMBANKMENT AND TRENCHED (LESS CRITICAL) TYPE INSTALLATIONS
- TABULATIONS DIFFERENTIATE BETWEEN YIELDING AND UNYIELDING FOUNDATION CONDITIONS WHICH IS TO BE DETERMINED BY THE ENGINEER.
- IRRESPECTIVE OF DESIGN FILL HEIGHT OF THE CULVERT, THE CULVERT STRENGTH CLASS IS ALSO TO COMPLY TO A 100mm EARTH COVER WITH CORRESPONDING DEAD AND LIVE LOADING (WHICH SIMULATES CONSTRUCTION STAGE OF CULVERT).
- THE TABULATIONS ALLOW FOR MULTIPLE PORTAL INSTALLATIONS AND WIDE TRENCHED CONDITIONS.

TABLE 1

BASE SLAB DESIGN

CLEAR SPAN OF PORTAL S (mm)	BASE SLAB DEPTH BD (mm)	SINGLE SPAN				MULTIPLE SPAN			
		TOP STEEL "A" BARS		BOTTOM STEEL"B"BARS		TOP STEEL "A" BARS		BOTTOM STEEL"B"BARS	
		DIAM (mm)	SPACING (mm)	DIAM (mm)	SPACING (mm)	DIAM (mm)	SPACING (mm)	DIAM (mm)	SPACING (mm)
600	200	Y12	150	Y10	250	Y12	175	Y12	175
750	200	Y12	125	Y10	250	Y12	125	Y12	125
900	200	Y16	175	Y10	250	Y16	200	Y16	200
1200	250	Y16	150	Y10	250	Y12	125	Y12	125
1500	250	Y16	125	Y10	250	Y16	150	Y16	150
1800	250	Y16	125	Y10	250	Y16	125	Y16	125
2100	300	Y16	150	Y10	250	Y16	175	Y16	175
2400	300	Y16	125	Y10	250	Y16	125	Y16	125
3000	350	Y20	150	Y10	250	Y16	125	Y16	125

TABLE 2a

CUT-OFF WALL DEPTHS

CLEAR HEIGHT OF PORTAL H (mm)	MATERIAL: VERY FINE TO FINE SAND						MATERIAL: MEDIUM TO COARSE SAND					
	CULVERT SLOPE						CULVERT SLOPE					
	3%		2%		1%		3%		2%		1%	
	TC1	TC2	TC1	TC2	TC1	TC2	TC1	TC2	TC1	TC2	TC1	TC2
600	800	500	800	500	800	500	800	500	800	500	800	500
750	800	500	800	500	800	500	800	500	800	500	800	500
900	800	600	800	500	800	500	800	500	800	500	800	500
1200	900	900	800	800	800	600	800	500	800	500	800	500
1500	1200	1200	1100	1100	800	800	800	800	800	700	800	500
1800	1500	1500	1400	1400	1000	1000	1000	1000	900	900	800	600
2100	1500	1500	1500	1500	1200	1200	1200	1200	1100	1100	800	800
2400	1500	1500	1500	1500	1400	1400	1400	1400	1300	1300	900	900
3000	1500	1500	1500	1500	1500	1500	1500	1500	1500	1500	1100	1100

TABLE 2b

CUT-OFF WALL DEPTHS

CLEAR HEIGHT OF PORTAL H (mm)	MATERIAL: FINE TO MEDIUM GRAVEL						MATERIAL: COARSE GRAVEL /COBBLES TO BOULDERS					
	CULVERT SLOPE						CULVERT SLOPE					
	3%		2%		1%		3%		2%		1%	
	TC1	TC2	TC1	TC2	TC1	TC2	TC1	TC2	TC1	TC2	TC1	TC2
600	500	500	500	500	500	500	500	500	500	500	500	500
750	500	500	500	500	500	500	500	500	500	500	500	500
900	500	500	500	500	500	500	500	500	500	500	500	500
1200	500	500	500	500	500	500	500	500	500	500	500	500
1500	500	500	500	500	500	500	500	500	500	500	500	500
1800	500	500	500	500	500	500	500	500	500	500	500	500
2100	700	700	600	600	500	500	500	500	500	500	500	500
2400	800	800	700	700	500	500	500	500	600	500	500	500
3000	1100	1100	1000	1000	600	600	700	700	600	600	500	500

IMPORTANT NOTE : THESE VALUES ARE THE MINIMUM REQUIRED FOR PROTECTION AGAINST PIPING. THE VALUE OF TC1 (DOWNSTREAM SIDE) SHOULD, FOR PURPOSES OF PROTECTION AGAINST SCOUR, BE INCREASED TO A DEPTH GREATER THAN 800mm IN THE CASE OF HIGH OUTLET VELOCITY AND INSITU MATERIALS OF LOW EROSION RESISTANCE.

TABLE 3

MAXIMUM PERMISSABLE FILL HEIGHT HF(m)

CULVERT SIZE SPAN x HEIGHT	CULVERT CLASS	MAXIMUM PERMISSIBLE FILL HEIGHT (m)	
		YIELDING FOUNDATION	UNYIELDING FOUNDATION
600x300	200S	10,2	5,6
600x450	200S	11,0	6,0
600x600	200S	12,0	6,4
750x300	175S	8,7	4,9
750x450	175S	9,2	5,2
750x600	175S	10,0	5,5
750x750	175S	10,5	5,8
900x300	175S	8,6	4,8
900x450	175S	9,0	5,1
900x600	175S	9,5	5,3
900x750	175S	10,0	5,6
900x900	175S	10,2	5,8
1200x300	150S	7,1	4,1
1200x450	150S	7,4	4,3
1200x600	150S	7,7	4,4
1200x900	150S	8,2	4,7
1200x1200	150S	8,8	5,0
1500x300	100S	4,5	2,9
1500x450	100S	4,7	3,0
1500x600	100S	4,9	3,1
1500x900	100S	5,3	3,3
1500x1200	100S	5,6	3,5
1500x1500	100S	6,0	3,7
1800x600	75S	3,3	2,4
1800x900	75S	3,6	2,5
1800x1200	75S	3,8	2,7
1800x1500	75S	4,0	2,8
1800x1800	75S	4,3	2,9
2100x600	75S	3,3	2,4
2100x900	75S	3,5	2,6
2100x1200	75S	3,7	2,7
2100x1500	75S	3,9	2,8
2100x1800	75S	4,1	2,9
2100x2100	75S	4,3	3,0
2400x600	75S	3,2	2,4
2400x900	75S	3,4	2,5
2400x1200	75S	3,5	3,5
2400x1500	75S	3,7	3,7
2400x1800	75S	3,8	3,8
2400x2400	75S	4,0	4,1
3000x600	75S	3,1	2,4
3000x900	75S	3,2	2,5
3000x1200	75S	3,3	2,6
3000x1500	75S	3,4	2,7
3000x1800	75S	3,5	2,7
3000x2400	75S	3,7	2,9
3000x3000	75S	3,1	2,7

SEE NOTE BELOW

NOTE :
NOT TO BE USED UNLESS APPROVED BY CHIEF ENGINEER: STRUCTURE DESIGN

NOTE:

YIELDING FOUNDATION CONDITIONS OCCUR WHEN THE FOUNDING MATERIAL AND THE FILL MATERIAL ARE EXPECTED TO SETTLE AT EQUAL RATES (COMPRESSABLE MATERIAL).
THE LOADING IS CALCULATED IN ACCORDANCE WITH TMH7 PART 2 CLAUSE 2.3.3.2(2)

UNYIELDING FOUNDATION CONDITIONS OCCUR WHEN THE FOUNDATION MATERIAL IS INCOMPRESSABLE (SOFT ROCK OR OTHER HARDER MATERIAL)
THE LOADING IS CALCULATED IN ACCORDANCE WITH TMH7 PART 2 CLAUSE 2.3.3.2 (3) AND (4)

TRENCH CONDITION OCCURS WHEN A CULVERT IS LAID IN A NARROW EXCAVATION AND BACKFILLED GROUND LEVEL.

MINIMUM FILL HEIGHT - 250mm FILL OR 100mm REINFORCED CONCRETE ROAD SLAB.

No.	DATE	ADDITIONS AND AMENDMENTS
0	OCT - 2023	ORIGINAL VERSION

STANDARD PLANS

WESTERN CAPE GOVERNMENT
DEPARTMENT OF INFRASTRUCTURE
TRANSPORT INFRASTRUCTURE BRANCH

PREFABRICATED CONCRETE RECTANGULAR PORTAL CULVERTS

TABULATIONS AND DESIGN NOTES

SCALE : N.T.S.

A2 ORIGINAL

INDEX NO.
WCS/22/1/D1

PLAN NO.
SHEET 1 OF 1

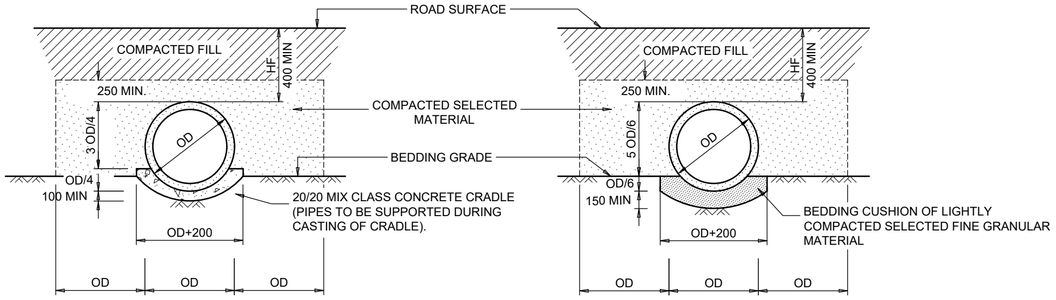

CLASS 'A' BEDDING

CLASS 'C' BEDDING

ROCK FOUNDATION

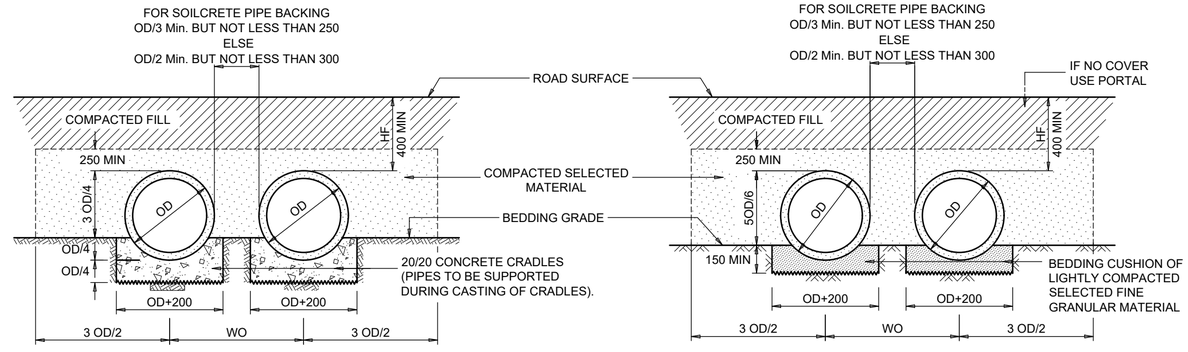

CLASS 'A' BEDDING

CLASS 'C' BEDDING

SOIL FOUNDATION

EMBANKMENT INSTALLATION

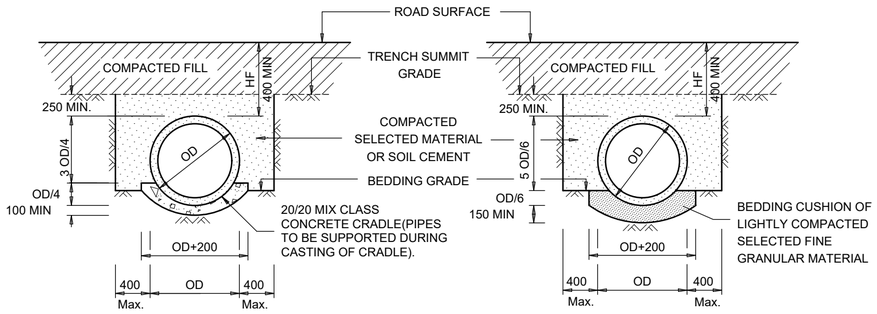

CLASS 'A' BEDDING

CLASS 'C' BEDDING

ROCK FOUNDATION

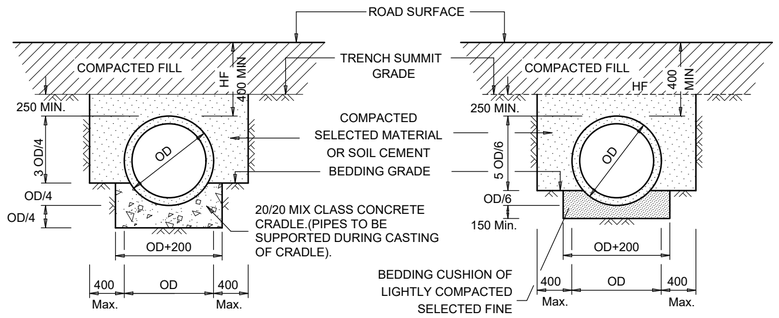

CLASS 'A' BEDDING

CLASS 'C' BEDDING

SOIL FOUNDATION

INSTALLATION NOTES :

A. WHERE THE BEDDING GRADE REVEALS OBJECTIONABLE MATERIAL OR MATERIAL NOT UNIFORMLY FIRM, THE BEDDING GRADE SHALL BE EXCAVATED DEEPER INTO THE MATERIAL. THE DEPTH OF ADDITIONAL EXCAVATION SHALL NOT BE LESS THAN 200mm AND, IN ADDITION, ALL POCKETS OF UNSTABLE OR POOR FOUNDATION MATERIAL SHALL BE REMOVED TO A DEPTH OF AT LEAST ONE METER. EXCAVATIONS ADDITIONALLY EXECUTED SHALL BE BACKFILLED WITH SELECTED MATERIAL, PROPERLY COMPACTED TO PROVIDE A FIRM FOUNDATION.

B. SELECTED MATERIAL TO BE USED FOR THE BEDDING CUSHION SHALL BE FINE GRANULAR MATERIAL SUCH AS COARSE SAND OR WELL-GRADED CRUSHED STONE OF NOMINAL SIZE NOT EXCEEDING 6,7mm AND NOT MORE THAN 10% OF WHICH SHALL PASS THROUGH A 0,15mm SIEVE.

C. SELECTED MATERIAL TO BE USED FOR BACKFILLING SHALL BE SAND, GRAVEL, WELL-GRADED CRUSHED STONE OR OTHER APPROVED MATERIAL CONTAINING NO MORE SILT OR CLAY THAN IS NECESSARY TO PROVIDE A DENSE AND STABLE FILLING. THE MATERIAL SHALL BE PLACED AT OPTIMUM MOISTURE CONTENT IN LAYERS EACH OF MAXIMUM THICKNESS 150mm AND COMPACTED TO AT LEAST 90% MDD FOR GRANULAR MATERIALS, OR THE DENSITY REQUIRED FOR ADJOINING LAYERS.

D. ALTERNATIVELY A WET MIXTURE OF SOIL CEMENT MAY BE USED FOR PIPE BACK-FILLING. THE MIXTURE SHALL CONSIST OF AN APPROVED SOIL OR GRAVEL MIXED WITH 5% (BY MASS) OF PORTLAND CEMENT BY VOLUME AND ONLY SUFFICIENT WATER TO GIVE A CONSISTENCY THAT WILL PERMIT THE SOIL CEMENT TO BE PLACED WITH VIBRATORS SO THAT ALL VOIDS BE PROPERLY FILLED. THE AGGREGATE USED FOR SOIL CEMENT SHALL PREFERABLY BE A SANDY MATERIAL BUT MAY CONTAIN LARGER PARTICLES UP TO 38mm AND IT SHALL NOT HAVE A P.I. EXCEEDING 10.

E. THE PIPE SHALL BE ADEQUATELY SUPPORTED DURING CASTING OF THE CLASS 'A' CONCRETE CRADLE. THE CONSTRUCTION SHALL BE MONOLITHIC WITHOUT HORIZONTAL JOINTS AND THE MIX SHALL BE SLOPPY AND SHALL BE PLACED ON ONE SIDE OF THE PIPE FLOWING THROUGH TO THE OTHER SIDE. VIBRATION SHALL NOT BE USED.

F. THE CLASS 'C' BEDDING CUSHION SHALL BE PLACED AND LIGHTLY COMPACTED TO THE LOWEST LEVEL OF THE UNDERSIDE OF PIPE WHEREUPON THE PIPE SHALL BE PLACED AND THE BEDDING CUSHION COMPLETED BY RAMMING AND TAMPING ADJACENT TO AND UNDER THE PIPE. ALTERNATIVELY, FOR APPROPRIATE IN SITU MATERIAL, THE BEDDING CUSHION MAY BE OMITTED AND THE SOIL FOUNDATION SHAPED TO FIT THE LOWER PART OF THE PIPE EXTERIOR WITH REASONABLE CLOSENESS.

G. BACKFILLING SHALL BE CARRIED OUT SIMULTANEOUSLY AND EQUALLY ON BOTH SIDES OF A CULVERT TO PREVENT UNEQUAL LATERAL FORCES FROM OCCURRING.

TRENCHED INSTALLATION

FOR MULTIPLE PIPE OR GREATER TRENCH WIDTH
USE THE EMBANKMENT INSTALLATION TABULATIONS
IN DETERMINING THE REQUIRED PIPE STRENGTH

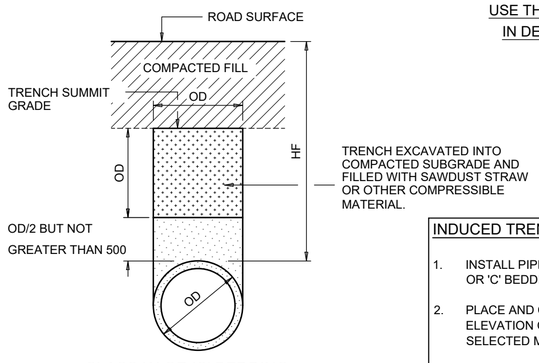

CLASS 'A' OR 'C' BEDDING

INDUCED TRENCH INSTALLATION
SINGLE PIPE ONLY

INDUCED TRENCH INSTALLATION PROCEDURE

1. INSTALL PIPE UNDER EMBANKMENT CONDITIONS ON CLASS 'A' OR 'C' BEDDING.
2. PLACE AND COMPACT THE ROAD SUBGRADE TO THE ELEVATION OF THE TRENCH SUMMIT GRADE USING SELECTED MATERIALS WHICH CAN BE EXCAVATED INTO.
3. EXCAVATE THE TRENCH OVER THE TOP OF THE PIPE AS SHOWN AND FILL WITH SAWDUST, STRAW OR OTHER COMPRESSIBLE MATERIAL.
4. COMPLETE THE EMBANKMENT FILLING IN THE NORMAL MANNER.

NOTATION :

OD - OUTSIDE DIAMETER OF PIPE (MIN 600mm)
WO - WIDTH BETWEEN LONGITUDINAL CENTRE LINES OF OUTER PIPES FOR MULTIPLE PIPES
HF - HEIGHT OF FILL

THE CULVERT STRENGTH CLASS, JOINT TYPE, BEDDING CLASS AND INSTALLATION TYPE TO BE SPECIFIED BY THE ENGINEER. REFER TO DWG. No. WCS/22/2/D1 .

THIS DRAWING TO BE READ IN CONJUNCTION WITH SECTION 2200 OF THE COLTO DOCUMENT "STANDARD SPECIFICATIONS FOR ROAD AND BRIDGE WORKS FOR STATE ROAD AUTHORITIES"

FOR TABULATIONS AND DESIGN NOTES, REFER TO DWG No. WCS/22/2/D1.

No.	DATE	ADDITIONS AND AMENDMENTS
0	OCT - 2023	ORIGINAL VERSION

STANDARD PLANS

WESTERN CAPE GOVERNMENT
DEPARTMENT OF INFRASTRUCTURE
TRANSPORT INFRASTRUCTURE BRANCH

PREFABRICATED CONCRETE PIPE CULVERTS

INSTALLATION DETAILS

SCALE : N.T.S.

A2 ORIGINAL

INDEX NO. WCS/22/2/C1

PLAN NO. SHEET 1 OF 6

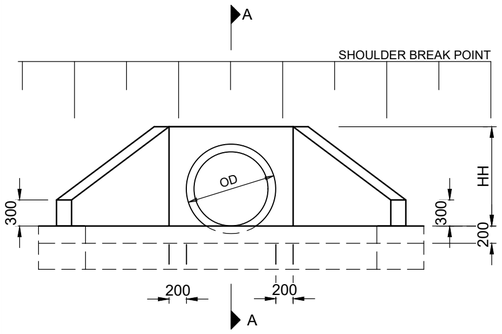

ELEVATION

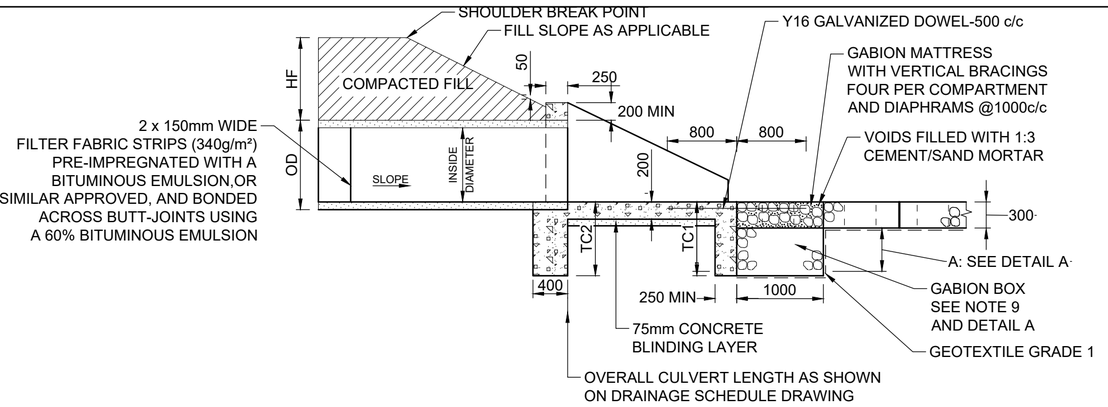

PART SECTION A-A

NOTES :

1. MATERIAL SPECIFICATIONS:
   - CONCRETE CLASS : 30/20 THROUGHOUT OR AS SPECIFIED
   - MINIMUM CEMENTITIOUS CONTENT = 300 kg/m
   - GABIONS AND GEOTEXTILE : AS SPECIFIED ON SCOUR PROTECTION DWG No. WCS/51/1/D1
   - STEEL REINFORCEMENT : HIGH TENSILE STEEL 450 MPa
   - WELDED STEEL MESH : HIGH TENSILE STEEL 485 MPa
   - WELDED STEEL MESH REINFORCEMENT TO CONFORM TO SABS 1024
   - FOR PRECAST UNITS: REFER TO DWG No. WCS/22/2/D1.
2. CONCRETE FINISH:
   - NON VISIBLE F1
   - VISIBLE F2
   - UNIFORMED U2
3. ALL EXPOSED SHARP EDGES TO HAVE 20 x 20 mm CHAMFERS.
4. CONCRETE COVER = 50mm.
5. REINFORCING LAP LENGTH = 45d.
6. HEADWALL NOT TO EXTEND 50mm MAXIMUM ABOVE SHOULDER BREAK POINT.
7. THE NECESSITY AS WELL AS THE EXTENT OF GABION MATTRESS PROTECTION TO BE SPECIFIED BY THE ENGINEER. REFER TO DWG No. WCS/22/6/D1.
8. CUT-OFF WALLS TO FORM AN INTEGRAL PART OF APRON SLABS.
9. CUT-OFF DEPTHS TO BE SPECIFIED BY THE ENGINEER. REFER TO DWG No. WCS/22/1/D1.
10. PERMISSIBLE FILL HEIGHT (HF) TO BE SPECIFIED BY THE ENGINEER. REFER TO DWG No. WCS/22/2/D1.
11. FOR REINFORCEMENT DETAILS OF HEADWALLS, WINGWALLS, APRON SLABS AND CUT-OFF WALLS REFER TO DWG No. WCS/22/2/C3.

NOTATION :

OD	:	OUTSIDE DIAMETER OF PIPE
WD	:	WIDTH BETWEEN LONGITUDINAL CENTER LINES OF OUTER PIPES FOR MULTIPLE PIPE
HH	:	HEADWALL HEIGHT
TC1	:	CUT-OFF WALL DEPTH AT APRON SLAB
TC2	:	CUT-OFF WALL DEPTH AT PIPE END
HF	:	HEIGHT OF FILL
WWH	:	WING WALL HEIGHT
FD	:	FOUNDATION DEPTH

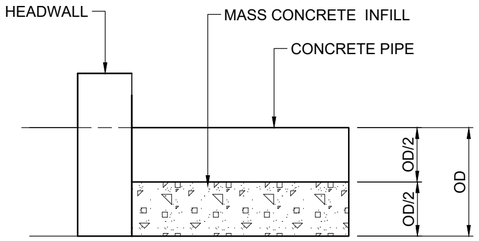

PART SECTION B-B

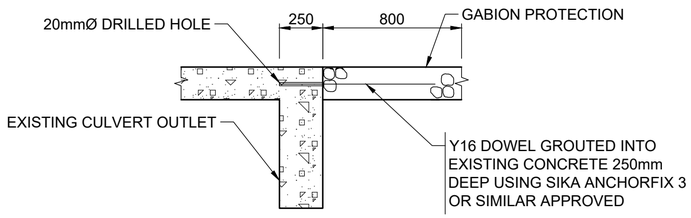

GABION PROTECTION TO

EXISTING CULVERT OUTLETS

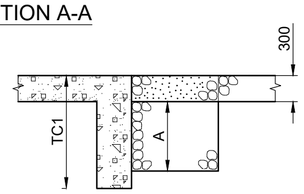

TC1	PROTECTION DEPTH (A)
<800	0
800-1300	500
≥ 1300	1000

DETAIL A

GABION PROTECTION DEPTH

THIS DRAWING, TOGETHER WITH DWG No. WCS/22/2/C3, TO BE READ IN CONJUNCTION SECTION 2002 OF THE COLTO DOCUMENT "STANDARD SPECIFICATIONS FOR ROAD AND BRIGDE WORKS FOR STATE ROAD AUTHOROTIES".

FOR INSTALLATION NOTES, REFER TO DWG No. WCS/22/2/C1.

FOR TABULATION AND DESIGN NOTES, REFER TO DWG No. WCS/22/2/D1.

FOR SETTING OUT REFER TO DWG No. WCS/22/2/C6.

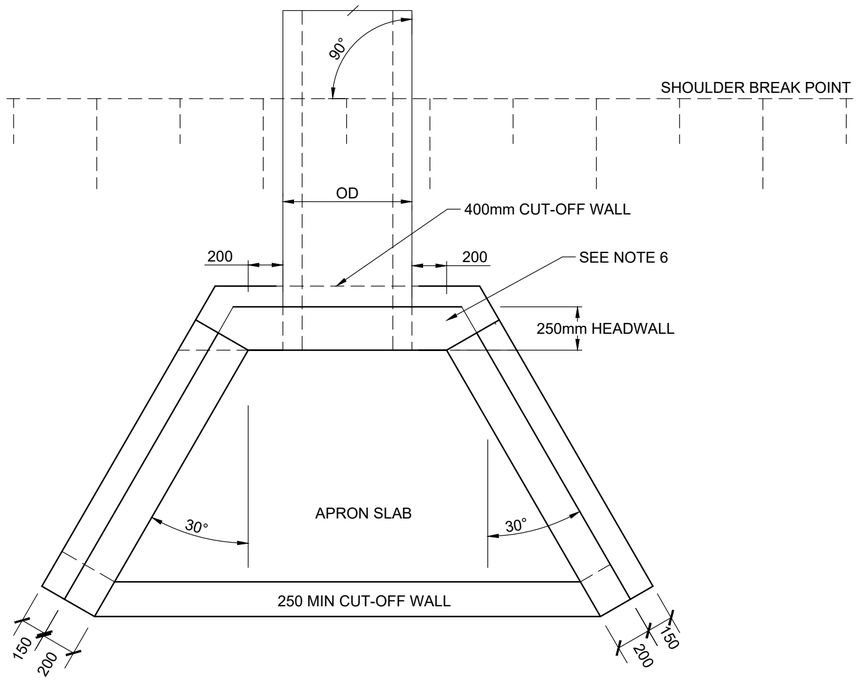

PART PLAN - SQUARE PIPE CULVERT

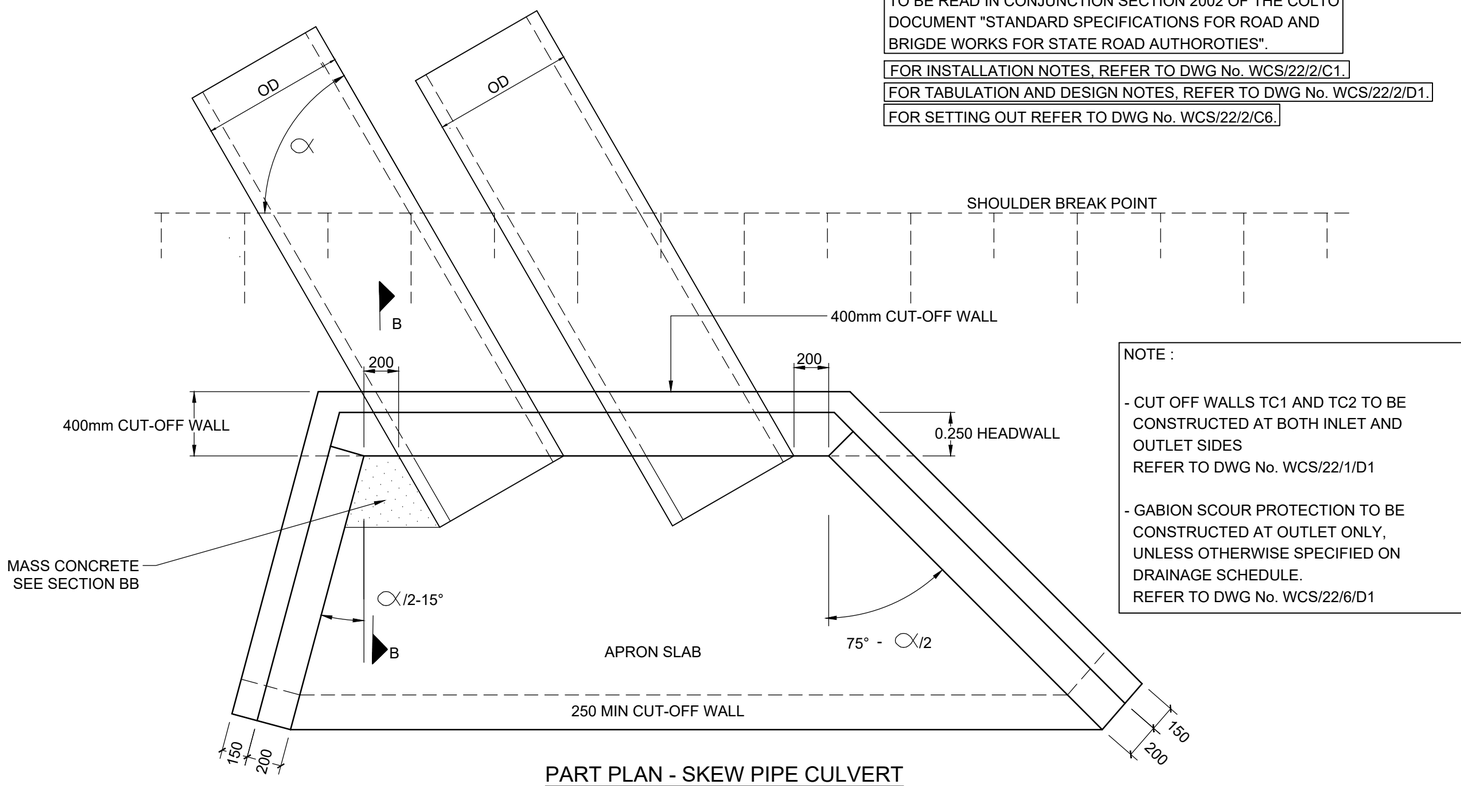

NOTE :

- CUT OFF WALLS TC1 AND TC2 TO BE CONSTRUCTED AT BOTH INLET AND OUTLET SIDES REFER TO DWG No. WCS/22/1/D1
- GABION SCOUR PROTECTION TO BE CONSTRUCTED AT OUTLET ONLY, UNLESS OTHERWISE SPECIFIED ON DRAINAGE SCHEDULE. REFER TO DWG No. WCS/22/6/D1

PART PLAN - SKEW PIPE CULVERT

No.	DATE	ADDITIONS AND AMENDMENTS
0	OCT - 2023	ORIGINAL VERSION

STANDARD PLANS

WESTERN CAPE GOVERNMENT
DEPARTMENT OF INFRASTRUCTURE
TRANSPORT INFRASTRUCTURE BRANCH

PREFABRICATED CONCRETE PIPE CULVERTS

INLET AND OUTLET DETAILS FOR
HEADWALL HEIGHTS (HH) NOT EXCEEDING 1,200m

SCALE : N.T.S.

A2 ORIGINAL

INDEX NO.
WCS/22/2/C2

PLAN NO.
SHEET 2 OF 6

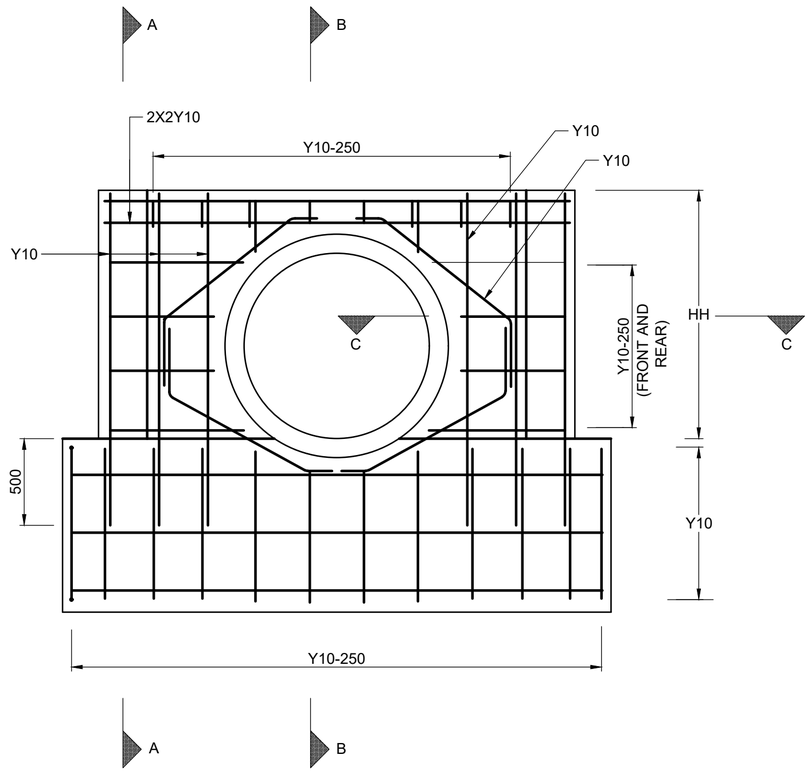

HEADWALL AND CUT-OFF WALL DETAIL

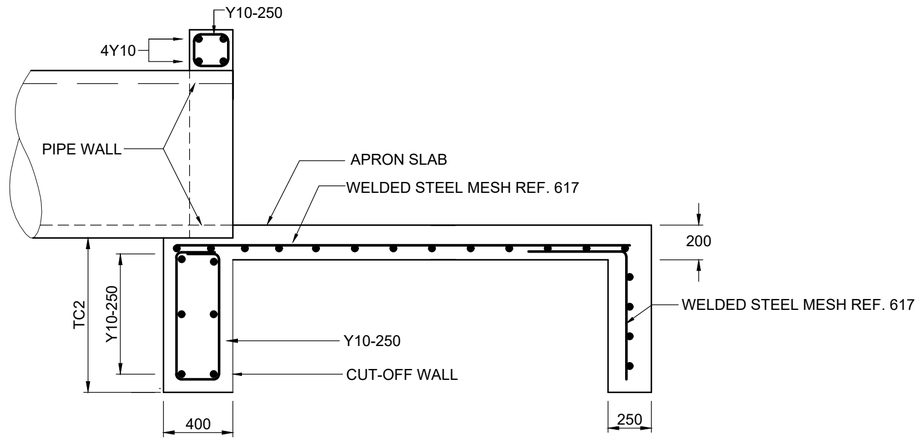

TYPICAL SECTION OF CUT-OFF WALL AND APRON SLAB DETAIL WITHOUT JOINT

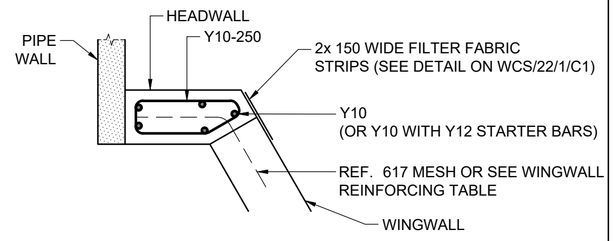

SECTION C-C

WINGWALL REINFORCEMENT	
WWH	VERTICAL STEEL
300 - 1200	Y10 - 250
ALL TRANSVERSE STEEL Y10-250 THROUGHOUT	

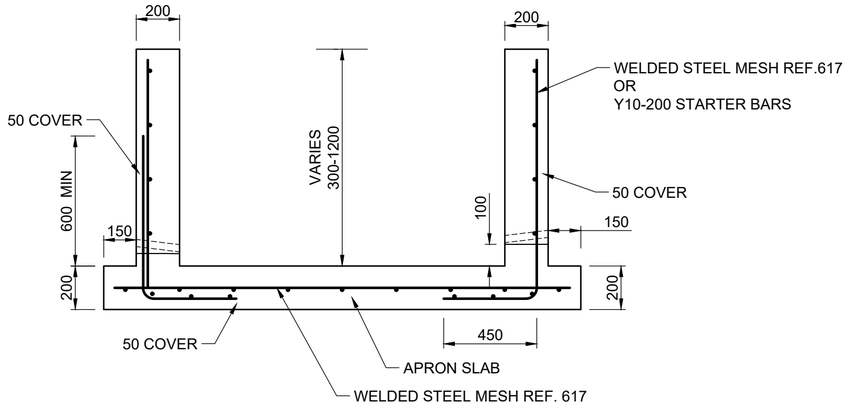

WINGWALL AND APRON SLAB DETAIL FOR
HEADWALL HEIGHTS (HH) NOT EXCEEDING 1,200m

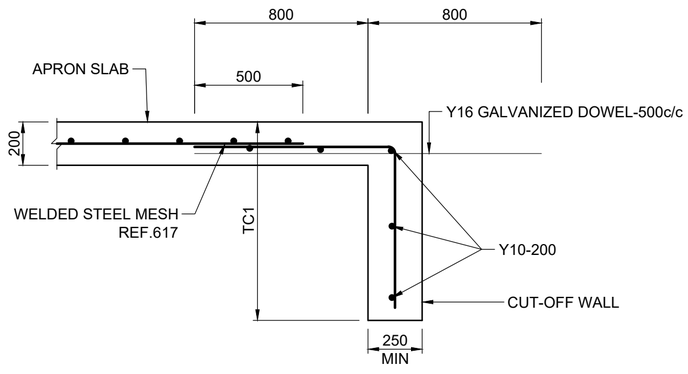

APRON SLAB AND CUT-OFF WALL DETAIL

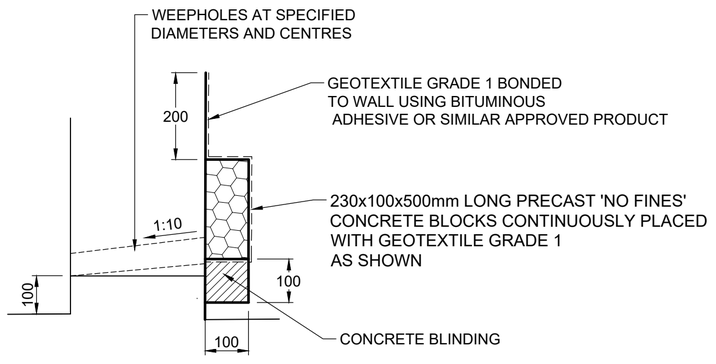

WEEPHOLE DETAIL

No.	DATE	ADDITIONS AND AMENDMENTS
0	OCT - 2023	ORIGINAL VERSION

STANDARD PLANS

WESTERN CAPE GOVERNMENT
DEPARTMENT OF INFRASTRUCTURE
TRANSPORT INFRASTRUCTURE BRANCH

PREFABRICATED CONCRETE PIPE CULVERTS

REINFORCEMENT DETAILS FOR HEADWALL
HEIGHT (HH) NOT EXCEEDING 1,200m

SCALE : N.T.S.

A2 ORIGINAL

INDEX NO.
WCS/22/2/C3

PLAN NO.
SHEET 3 OF 6

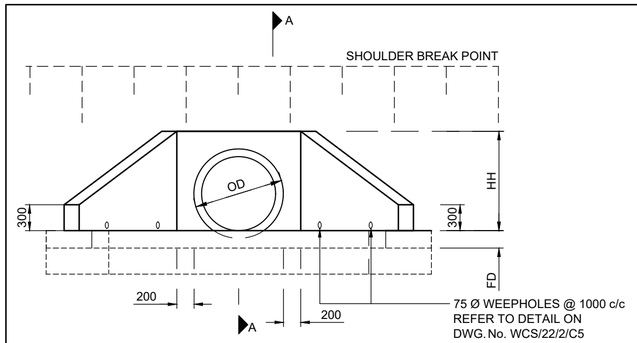

ELEVATION

NOTATION :

H	:	CLEAR INTERNAL HEIGHT OF PORTAL
S	:	CLEAR INTERNAL SPAN OF PORTAL
W	:	TOTAL EXTERNAL WIDTH OF PORTAL
HH	:	HEADWALL HEIGHT
BW	:	BASE SLAB WIDTH
BD	:	BASE SLAB DEPTH
TC1	:	CUT-OFF WALL DEPTH AT END OF APRON SLAB
TC2	:	CUT-OFF WALL DEPTH AT END OF BASE SLAB
HF	:	HEIGHT OF FILL
WWH	:	WING WALL HEIGHT
FD	:	FOUNDATION DEPTH

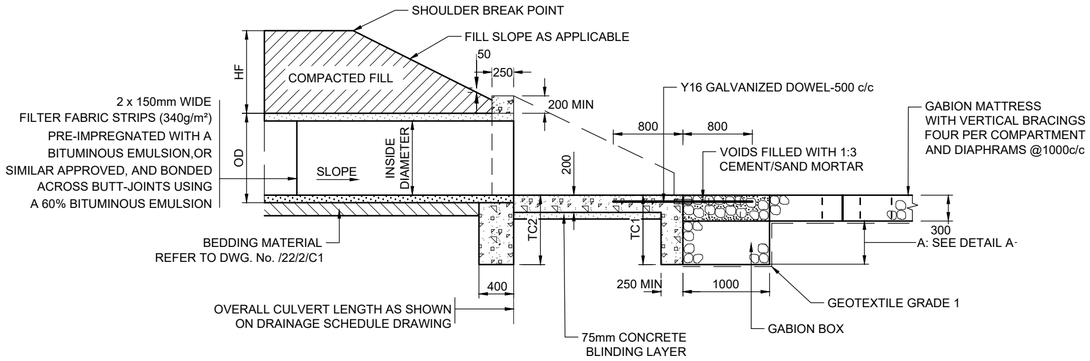

PART SECTION A-A

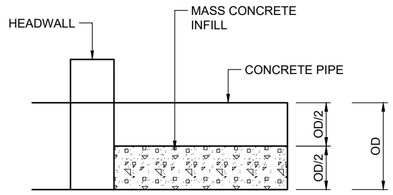

PART SECTION B-B

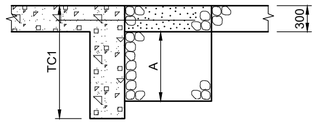

TC1	PROTECTION DEPTH (A)
<800	0
800-1300	500
≥ 1300	1000

DETAIL A
GABION PROTECTION DEPTH

NOTES:

1. MATERIAL SPECIFICATIONS:

- CONCRETE CLASS : 30/20 THROUGHOUT OR AS SPECIFIED
- GABIONS AND GEOTEXTILE : AS SPECIFIED ON SCOUR PROTECTION DWG No. WCS/51/1/D1
- STEEL REINFORCEMENT : HIGH TENSILE STEEL 450 MPa
- WELDED STEEL MESH : HIGH TENSILE STEEL 485 MPa
- WELDED STEEL MESH REINFORCEMENT TO CONFORM TO SABS 1024
- FOR PRECAST UNITS: REFER TO DWG No. WCS/22/2/D1.

2. CONCRETE FINISH

- NON VISIBLE F1
- VISIBLE F2
- UNIFORMED U2

3. ALL EXPOSED SHARP EDGES TO HAVE 20 x 20 mm CHAMFERS.

4. CONCRETE COVER = 50mm.

5. REINFORCING LAP LENGTH = 45d.

6. HEADWALL NOT TO EXTEND 50mm MAXIMUM ABOVE SHOULDER BREAK POINT.

7. Y16 DOWELS IN APRON SLAB TO BE BENT TO AVOID OBSTRUCTING PLACEMENT OF GABIONS. Y16 DOWELS THEN TO BE BENT HORIZONTALLY BEFORE PLACEMENT OF MATTRESS.

8. THE NECESSITY AS WELL AS THE EXTENT OF GABION MATTRESS PROTECTION TO BE SPECIFIED BY THE ENGINEER. REFER TO DWG No. WCS/22/6/D1.

9. CUT-OFF WALLS TO FORM AN INTEGRAL PART OF APRON SLABS.

10. CUT-OFF DEPTHS TO BE SPECIFIED BY THE ENGINEER. REFER TO DWG No. WCS/22/1/D1.

11. PERMISSIBLE FILL HEIGHT (HF) TO BE SPECIFIED BY THE ENGINEER. REFER TO DWG No. WCS/22/2/D1.

12. FOR REINFORCEMENT DETAILS OF HEADWALLS, WINGWALLS, APRON SLABS AND CUT-OFF WALLS REFER TO DWG No. WCS/22/2/C3.

THIS DRAWING, TOGETHER WITH DWG No. WCS/22/2/C5, TO BE READ IN CONJUNCTION WITH SECTION 2200 OF THE COLTO DOCUMENT "STANDARD SPECIFICATIONS FOR ROAD AND BRIDGE WORKS FOR STATE ROAD AUTHORITIES".

FOR INSTALLATION NOTES, REFER TO DWG No WCS/22/2/C1.

FOR TABULATIONS AND DESIGN NOTES, REFER TO DWG No. WCS/22/1/D1.

FOR SETTING OUT REFER TO DWG No.REFER TO DWG No. WCS/22/2/C6.

NOTES

- CUT OFF WALLS TC1 AND TC2 TO BE CONSTRUCTED AT BOTH INLET AND OUTLET SIDES REFER TO DWG No. WCS/22/1/D1
- GABION SCOUR PROTECTION TO BE CONSTRUCTION AT OUTLET ONLY. EXTENT OF INLET/OUTLET PROTECTION AS PER DWG NO. WCS/22/5/D1 UNLESS OTHERWISE SPECIFIED ON DRAINAGE SCHEDULE.

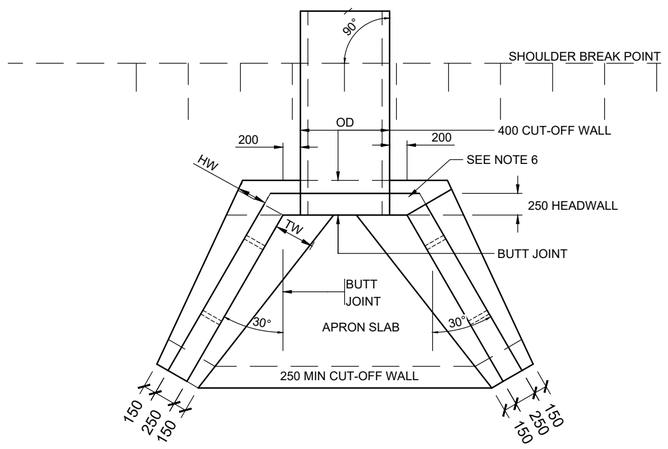

PART PLAN - PERPENDICULAR PIPE CULVERT

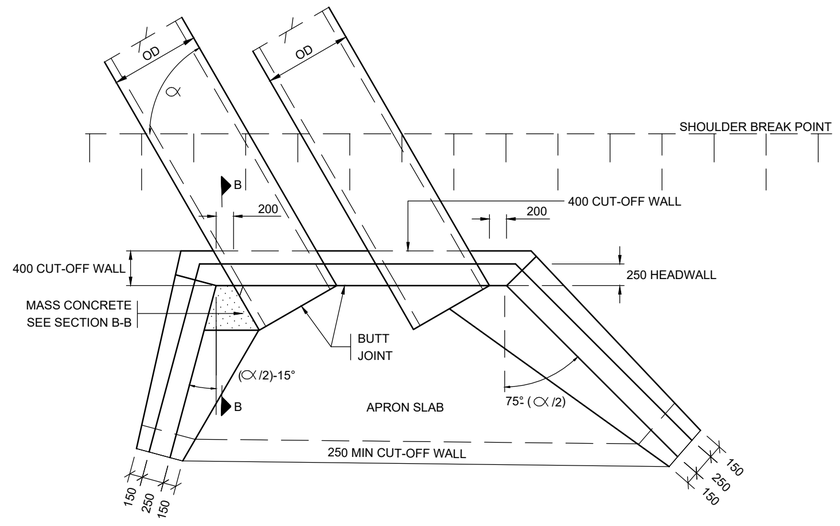

PART PLAN - SKEW PIPE CULVERT

No.	DATE	ADDITIONS AND AMENDMENTS
0	OCT - 2023	ORIGINAL VERSION

STANDARD PLANS

WESTERN CAPE GOVERNMENT
DEPARTMENT OF INFRASTRUCTURE
TRANSPORT INFRASTRUCTURE BRANCH

PRECAST CONCRETE PIPE CULVERTS

INLET AND OUTLET DETAILS FOR HEADWALL HEIGHTS (HH) EXCEEDING 1,200m NOT EXCEEDING 1,800m

SCALE : N.T.S.

A2 ORIGINAL

INDEX NO.
WCS/22/2/C4

PLAN NO.
SHEET 4 OF 6

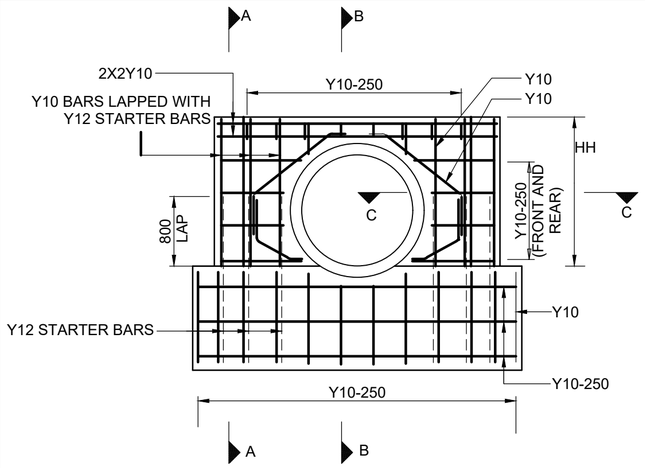

HEADWALL AND CUT-OFF WALL DETAIL

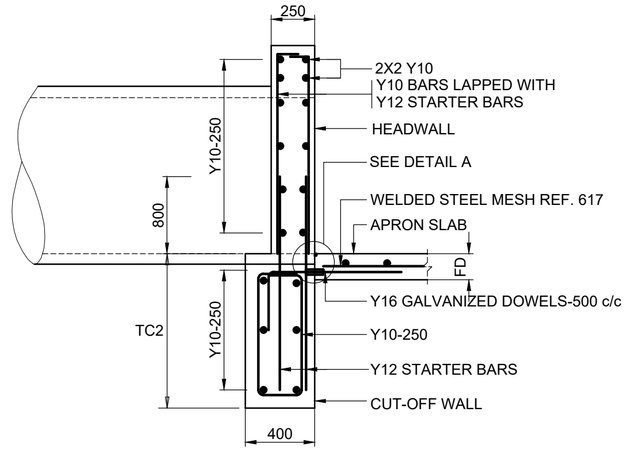

HEADWALL AND CUT-OFF WALL DETAIL
SECTION A-A

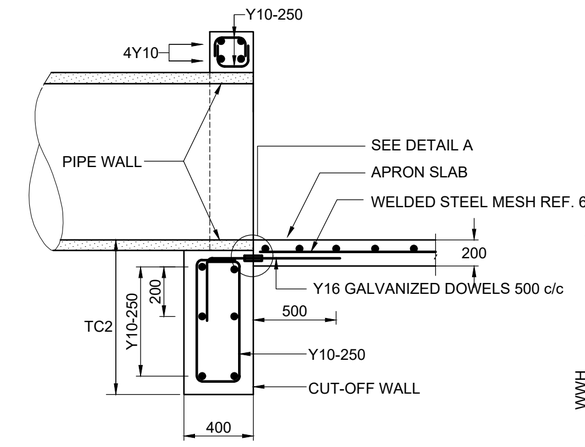

CUT-OFF WALL AND APRON SLAB DETAIL
SECTION B-B

WWH	FOOTING STEEL TOP AND BOTTOM	VERTICAL REAR WALL STEEL	VERTICAL FRONT WALL STEEL
300 - 1800	Y12 - 250	Y12 - 250	Y10 - 250
ALL TRANSVERSE STEEL Y10-250 THROUGHOUT			

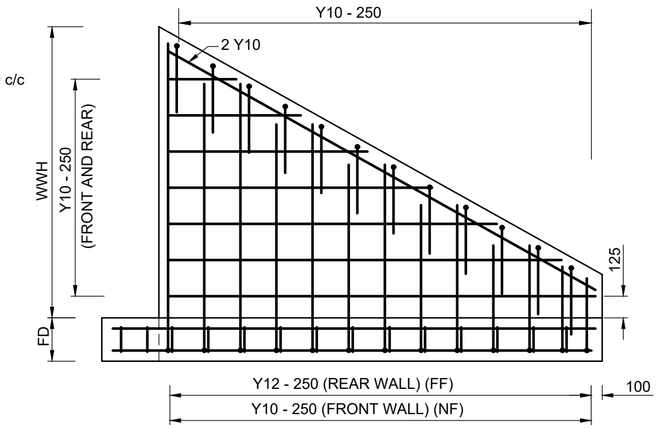

WINGWALL ELEVATION

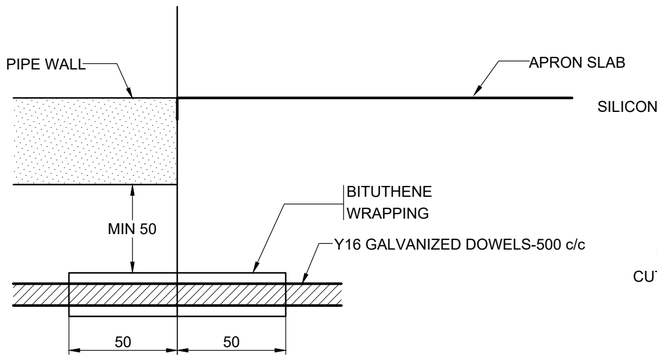

DETAIL A

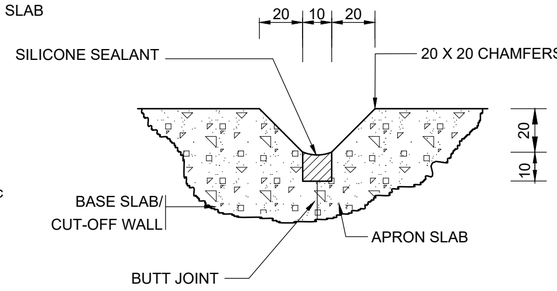

DETAIL B

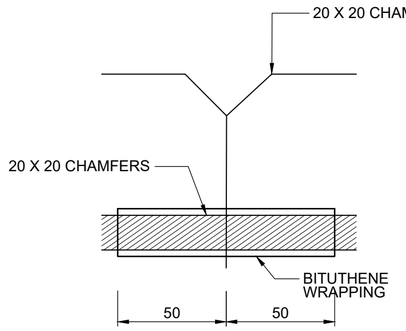

DETAIL C

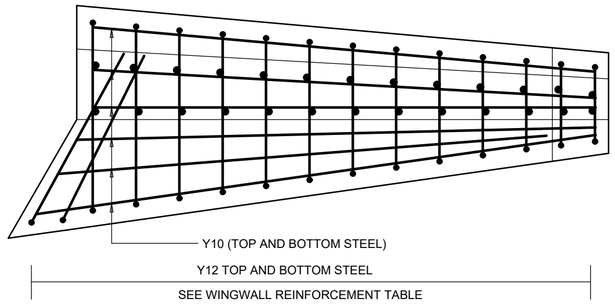

WINGWALL FOUNDATION PLAN

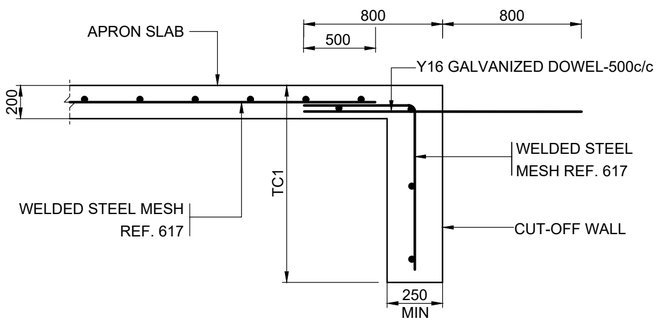

APRON SLAB AND CUT-OFF WALL DETAIL

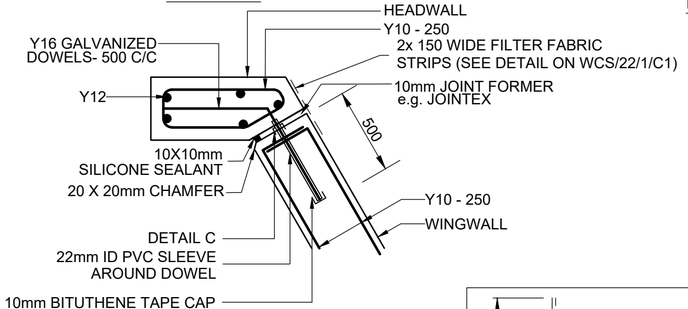

SECTION B-B

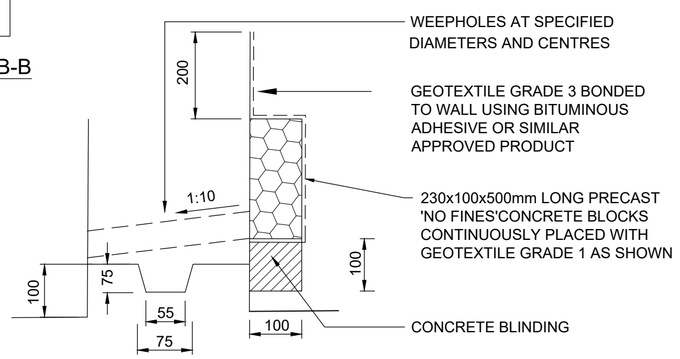

WEEPHOLE DETAIL

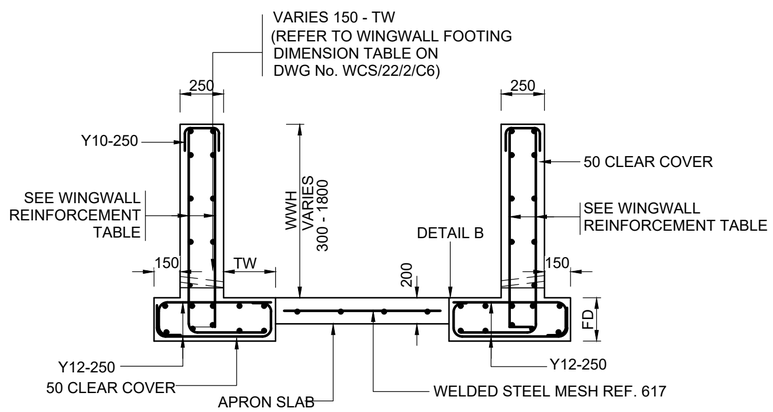

WINGWALL AND APRON SLAB DETAIL FOR
HEADWALL HEIGHTS (HH) NOT EXCEEDING 1,800m

No.	DATE	ADDITIONS AND AMENDMENTS
0	OCT - 2023	ORIGINAL VERSION

STANDARD PLANS

WESTERN CAPE GOVERNMENT
DEPARTMENT OF INFRASTRUCTURE
TRANSPORT INFRASTRUCTURE BRANCH

PREFABRICATED CONCRETE PIPE CULVERTS

REINFORCEMENT DETAILS FOR HEADWALL HEIGHTS (HH) EXCEEDING 1,200m NOT EXCEEDING 1,800m

SCALE : N.T.S.

A2 ORIGINAL

INDEX NO. WCS/22/2/C5

PLAN NO. SHEET 5 OF 6

NOTE :
WHERE CULVERT STRUCTURE NUMBERS ARE REQUIRED
REFER TO DWG. No. WCS/60/8/D1

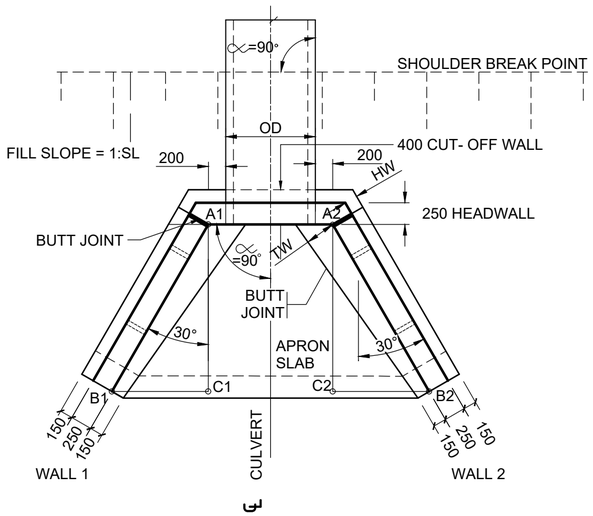

PLAN - SQUARE PIPE CULVERTS

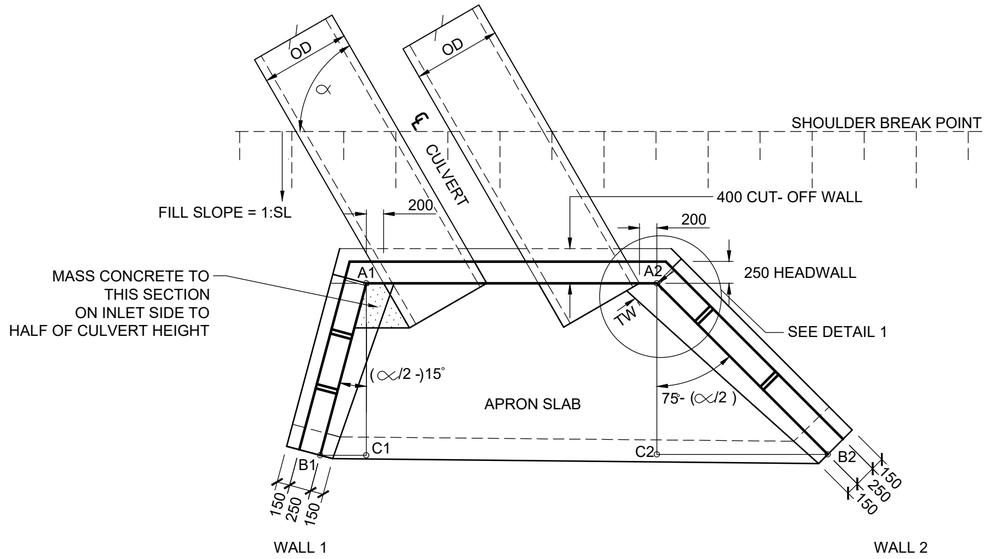

PLAN - SKEW CULVERTS TWO PIPES

NOTATION:

HH : HEADWALL HEIGHT

TW : TOE WIDTH

WINGWALL FOUNDATION DIMENSIONS FOR HEADWALL HEIGHTS 1200mm - 1800mm			
HH	HW	TW	FD
1200	150	600	225
1500	200	650	225
1800	200	700	250

SETTING OUT CALCULATIONS (SQUARE CULVERTS):	SETTING OUT CALCULATIONS (SKEW CULVERTS):	CALCULATED EXAMPLE (SQUARE CULVERTS):	CALCULATED EXAMPLE (SKEW CULVERTS):
1) CALCULATE SLOPE OF TOP OF WINGWALL: FILL SLOPE = 1:SL WALL1: SL1= SL/cos 30° WALL2: SL2= SL/cos 30°	SL1= $\frac{SL}{COS((\propto/2)-15)}$ SL2= $\frac{SL}{COS(75-(\propto/2))}$	SL= 1.5; H1= 3.00; H2= 0.30; ∝ = 90° SL1= 1.732 SL2= 1.732	SL= 1.5; H1= 3.00; H2= 0.30; ∝ = 60° SL1= 1.553 SL2= 2.121
2) CALCULATE LENGTH OF WINGWALL: H1 = WINGWALL HEIGHT AT HEADWALL H2 = WINGWALL HEIGHT AT CUT-OFF WALL (NORMALLY 300mm) WALL1: A1B1= (H1-H2)SL1 WALL2: A2B2= (H1-H2)SL2	WALL 1: A1B1= (H1-H2) SL1 WALL 2: A2B2= (H1-H2) SL2	A1B1= 4.676m A2B2= 4.676m	A1B1= 4.193m A2B2= 5.727m
3) CALCULATE SETTING OUT OF WINGWALL: WALL1: A1C1= A1B1 cos 30° C1B1= A1B1 sin 30° WALL2: A2C2= A2B2 cos 30° C2B2= A2B2 sin 30°	A1C1= A1B1 cos ((∝ /2)-15) C1B1= A1B1 SIN ((∝/2)-15) A2C2= A2B2 COS (75-(∝/2)) C2B2= A2B2 SIN (75-(∝/2))	A1C1= 4.050m C1B1= 2.338m A2C2= 4.050m C2B2= 2.338m	A1C1= 4.050m C1B1= 1.085m A2C2= 3.728m C2B2= 4.050m

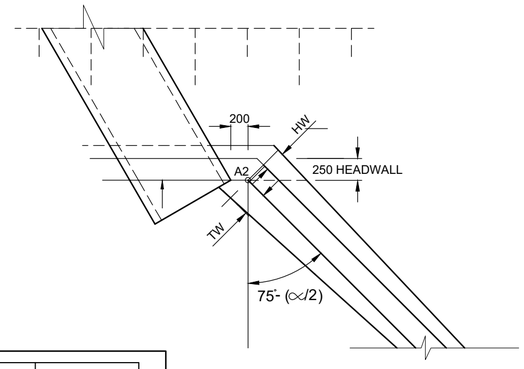

DETAIL 1

∝	(∝)/2 - 15	75 -(∝)/2
90	30	30
80	25	35
70	20	40
60	15	45
50	10	50
40	5	55
30	0	60

No.	DATE	ADDITIONS AND AMENDMENTS
0	OCT - 2023	ORIGINAL VERSION

STANDARD PLANS

WESTERN CAPE GOVERNMENT
DEPARTMENT OF INFRASTRUCTURE
TRANSPORT INFRASTRUCTURE BRANCH

PREFABRICATED CONCRETE PIPE CULVERTS

GENERAL DETAILS OF WINGWALLS AND SETTING OUT

SCALE : N.T.S.

A2 ORIGINAL

INDEX NO.
WCS/22/2/C6

PLAN NO.
SHEET 6 OF 6

NOMINAL INSIDE PIPE DIAM (mm)	HEIGHT OF FILL HF (m)	EMBANKMENT							
		FOUNDATION MATERIAL							
		TRENCHED		ROCK		FIRM SOIL		YIELDING SOIL	
		BEDDING		BEDDING					
		CLASS A	CLASS C	CLASS A	CLASS C	CLASS A	CLASS C	CLASS A	CLASS C
		D - LOAD		D - LOAD					
600	0,4	50	75	50	75	50	75	50	75
	1,0	50	75	50	75	50	75	50	75
	1,5	50	75	50	75	50	75	50	75
	2,0	50	75	50	75	50	75	50	75
	2,5	50	75	50	75	50	75	50	75
	3,0	50	75	50	75	50	75	50	75
	3,5	50	75	50	100	50	75	50	75
	4,0	50	75	50	100	50	100	50	75
	4,5	50	100	75	SP(105)	50	100	50	75
	5,0	50	100	75	SP(120)	75	100	50	100
	5,5	50	100	75	SP(130)	75	SP(110)	50	100
	6,0	75	100	75	SP(145)	75	SP(120)	50	100
	6,5	75	SP(110)	100	SP(155)	75	SP(135)	75	SP(105)
	7,0	75	SP(115)	100	SP(170)	75	SP(145)	75	SP(115)
	7,5	75	SP(125)	100	SP(180)	100	SP(155)	75	SP(120)
	8,0	75	SP(130)	100	SP(195)	100	SP(165)	75	SP(130)
	8,5	75	SP(140)	SP(105)	SP(205)	100	SP(175)	75	SP(140)
	9,0	75	SP(145)	SP(115)	SP(220)	100	SP(185)	75	SP(145)
	9,5	100	SP(155)	SP(120)	SP(235)	100	SP(195)	100	SP(155)
	10,0	100	SP(160)	SP(125)	SP(245)	SP(105)	SP(205)	100	SP(165)
750	0,4	50	75	50	75	50	75	50	75
	1,0	50	75	50	75	50	75	50	75
	1,5	50	75	50	75	50	75	50	75
	2,0	50	75	50	75	50	75	50	75
	2,5	50	75	50	75	50	75	50	75
	3,0	50	75	50	75	50	75	50	75
	3,5	50	75	50	100	50	75	50	75
	4,0	50	75	50	100	50	100	50	75
	4,5	50	75	75	100	50	100	50	75
	5,0	50	100	75	SP(110)	75	100	50	100
	5,5	50	100	75	SP(125)	75	SP(110)	50	100
	6,0	50	100	75	SP(135)	75	SP(120)	50	100
	6,5	75	SP(105)	100	SP(150)	75	SP(130)	75	100
	7,0	75	SP(110)	100	SP(160)	75	SP(145)	75	SP(110)
	7,5	75	SP(120)	100	SP(175)	100	SP(155)	75	SP(115)
	8,0	75	SP(125)	100	SP(185)	100	SP(165)	75	SP(125)
	8,5	75	SP(135)	SP(105)	SP(200)	100	SP(175)	75	SP(130)
	9,0	75	SP(140)	SP(110)	SP(210)	100	SP(185)	75	SP(140)
	9,5	75	SP(150)	SP(115)	SP(225)	100	SP(195)	100	SP(150)
	10,0	100	SP(155)	SP(125)	SP(235)	SP(105)	SP(205)	100	SP(155)
900	0,4	50	75	50	75	50	75	50	75
	1,0	50	75	50	75	50	75	50	75
	1,5	50	75	50	75	50	75	50	75
	2,0	50	75	50	75	50	75	50	75
	2,5	50	75	50	75	50	75	50	75
	3,0	50	75	50	75	50	75	50	75
	3,5	50	75	50	75	50	75	50	75
	4,0	50	75	50	100	50	100	50	75
	4,5	50	75	50	100	50	100	50	75
	5,0	50	100	75	SP(105)	50	100	50	100
	5,5	50	100	75	SP(120)	75	SP(105)	50	100
	6,0	50	100	75	SP(130)	75	SP(115)	50	100
	6,5	75	100	100	SP(145)	75	SP(125)	75	100
	7,0	75	SP(105)	100	SP(155)	75	SP(135)	75	SP(105)
	7,5	75	SP(115)	100	SP(170)	100	SP(145)	75	SP(115)
	8,0	75	SP(120)	100	SP(180)	100	SP(155)	75	SP(125)
	8,5	75	SP(130)	100	SP(195)	100	SP(165)	75	SP(135)
	9,0	75	SP(135)	SP(110)	SP(205)	100	SP(175)	75	SP(140)
	9,5	75	SP(145)	SP(115)	SP(220)	100	SP(190)	75	SP(150)
	10,0	75	SP(150)	SP(120)	SP(230)	SP(105)	SP(200)	100	SP(155)

NOMINAL INSIDE PIPE DIAM (mm)	HEIGHT OF FILL HF (m)	EMBANKMENT							
		FOUNDATION MATERIAL							
		TRENCHED		ROCK		FIRM SOIL		YIELDING SOIL	
		BEDDING		BEDDING					
		CLASS A	CLASS C	CLASS A	CLASS C	CLASS A	CLASS C	CLASS A	CLASS C
		D - LOAD		D - LOAD					
1200	0,4	25	50	25	50	25	50	25	50
	1,0	25	50	25	50	25	50	25	50
	1,5	25	50	25	50	25	50	25	50
	2,0	25	50	25	50	25	50	25	50
	2,5	25	50	25	50	25	50	25	50
	3,0	50	75	50	75	50	75	25	50
	3,5	50	75	50	75	50	75	50	75
	4,0	50	75	50	100	50	75	50	75
	4,5	50	75	50	100	50	100	50	75
	5,0	50	100	75	SP(110)	50	100	50	75
	5,5	50	100	75	SP(110)	75	100	50	100
	6,0	50	100	75	SP(125)	75	SP(110)	50	100
	6,5	50	100	75	SP(135)	75	SP(120)	50	100
	7,0	75	SP(105)	100	SP(150)	75	SP(130)	75	SP(105)
	7,5	75	SP(110)	100	SP(160)	75	SP(140)	75	SP(115)
	8,0	75	SP(115)	100	SP(170)	100	SP(150)	75	SP(120)
	8,5	75	SP(125)	100	SP(185)	100	SP(160)	75	SP(130)
	9,0	75	SP(130)	100	SP(195)	100	SP(170)	75	SP(135)
	9,5	75	SP(135)	SP(105)	SP(205)	100	SP(180)	75	SP(145)
	10,0	75	SP(145)	SP(115)	SP(220)	100	SP(190)	100	SP(155)
1500	0,4	25	50	25	50	25	50	25	50
	1,0	25	50	25	50	25	50	25	50
	1,5	25	50	25	50	25	50	25	50
	2,0	25	50	25	50	25	50	25	50
	2,5	25	50	25	50	25	50	25	50
	3,0	25	50	25	50	25	50	25	50
	3,5	50	75	50	75	50	75	50	75
	4,0	50	75	50	75	50	75	50	75
	4,5	50	75	50	100	50	100	50	75
	5,0	50	75	50	100	50	100	50	75
	5,5	50	100	75	SP(105)	50	100	50	100
	6,0	50	100	75	SP(120)	75	SP(105)	50	100
	6,5	50	100	75	SP(130)	75	SP(115)	50	100
	7,0	75	100	75	SP(145)	75	SP(125)	75	SP(105)
	7,5	75	SP(110)	100	SP(155)	75	SP(135)	75	SP(110)
	8,0	75	SP(115)	100	SP(165)	75	SP(145)	75	SP(120)
	8,5	75	SP(120)	100	SP(180)	100	SP(155)	75	SP(125)
	9,0	75	SP(130)	100	SP(190)	100	SP(165)	75	SP(135)
	9,5	75	SP(135)	SP(105)	SP(205)	100	SP(175)	75	SP(140)
	10,0	75	SP(140)	SP(110)	SP(215)	100	SP(190)	75	SP(150)
1800	0,4	25	50	25	50	25	50	25	50
	1,0	25	50	25	50	25	50	25	50
	1,5	25	50	25	50	25	50	25	50
	2,0	25	50	25	50	25	50	25	50
	2,5	25	50	25	50	25	50	25	50
	3,0	25	50	25	50	25	50	25	50
	3,5	50	75	50	75	50	75	25	50
	4,0	50	75	50	75	50	75	50	75
	4,5	50	75	50	100	50	100	50	75
	5,0	50	75	50	100	50	100	50	75
	5,5	50	100	75	100	50	100	50	100
	6,0	50	100	75	SP(110)	75	SP(105)	50	100
	6,5	50	100	75	SP(125)	75	SP(115)	50	100
	7,0	50	100	75	SP(135)	75	SP(125)	50	100
	7,5	75	SP(105)	100	SP(150)	75	SP(135)	75	SP(110)
	8,0	75	SP(110)	100	SP(160)	75	SP(145)	75	SP(115)
	8,5	75	SP(120)	100	SP(170)	100	SP(155)	75	SP(125)
	9,0	75	SP(125)	100	SP(185)	100	SP(165)	75	SP(130)
	9,5	75	SP(135)	100	SP(195)	100	SP(175)	75	SP(140)
	10,0	75	SP(140)	SP(105)	SP(210)	100	SP(185)	75	SP(145)

NOTE:

YIELDING FOUNDATION CONDITIONS OCCUR WHEN THE FOUNDING MATERIAL AND THE FILL MATERIAL ARE EXPECTED TO SETTLE AT EQUAL RATES (COMPRESSABLE MATERIAL.) THE LOADING IS CALCULATED IN ACCORDANCE WITH TMH7 PART 2 CLAUSE 2.3.3.2(2)

UNYIELDING FOUNDATION CONDITIONS OCCUR WHEN THE FOUNDATION MATERIAL IS INCOMPRESSABLE (SOFT ROCK OR OTHER HARDER MATERIAL) THE LOADING IS CALCULATED IN ACCORDANCE WITH TMH7 PART 2 CLAUSE 2.3.3.2 (3) AND (4)

TRENCH CONDITION OCCURS WHEN THE CULVERT IS LAID IN A NARROW EXCAVATION AND BACKFILLED GROUND LEVEL.

MINIMUM FILL HEIGHT - 250mm FILL OR 100mm REINFORCED CONCRETE ROAD SLAB.

HEIGHT OF FILL	BEDDING	
	CLASS A	CLASS C
HF(m)	STRENGTH CLASS	
≤ 5	25	25
5 < HF ≤ 9	25	50
9 < HF ≤ 17	25	75
17 < HF ≤ 22	25	100
22 < HF ≤ 24	50	100
24 < HF ≤ 30	50	---

INDUCED TRENCH INSTALLATION TABULATION

DESIGN NOTES :

1. SUPERIMPOSED DESIGN LOADING - EARTH DEAD LOAD AND HIGHWAY LIVE LOAD IN ACCORDANCE WITH TMH 7, PARTS 1 & 2.
2. TABULATIONS SATISFY THE FOLLOWING REQUIREMENT: FOR ANY DEPTH OF EMBANKMENT FILLING GREATER THAN 400mm, THE STRENGTH OF THE PIPE SHALL NOT BE LESS THAN THE STRENGTH WHICH WOULD RESULT FROM 400mm EARTH COVER DEAD AND LIVE LOADING CONDITIONS.
3. THE D-LOAD STRENGTH DESIGNATION IS THE MINIMUM LOAD, IN kN/m LENGTH PER UNIT NOMINAL INTERNAL DIAMETER, THAT THE PIPE IS REQUIRED TO WITHSTAND IN SATISFYING THE PROOF TEST LOAD SPECIFIED IN SANS 677.
4. THE DESIGNATION SP INDICATES THAT THE STANDARD MANUFACTURED D-LOAD STRENGTHS ARE INADEQUATE TO SATISFY THE SUPERIMPOSED LOADING AND THAT A SPECIAL PIPE WILL BE REQUIRED. THE FIGURE IN BRACKETS IS THE MINIMUM REQUIRED D-LOAD STRENGTH. WHEREVER POSSIBLE, AVOID THE UTILISATION OF SPECIAL PIPES BY ALTERNATIVE SOLUTION.
5. FOR MULTIPLE PIPE INSTALLATIONS OR TRENCH WIDTHS GREATER THAN THE MAXIMUM SPECIFIED, USE THE EMBANKMENT TABULATIONS IN DETERMINING THE REQUIRED STRENGTH CLASS.
6. USE SPIGOT AND SOCKET RUBBER RING JOINTS WHERE SUBSTANTIAL JOINT MOVEMENT IS ANTICIPATED OTHERWISE USE INTERLOCKING JOINTS.
7. DO NOT USE CLASS 'A' BEDDING ON YIELDING FOUNDATIONS.
8. WHERE A ROCK FOUNDATION IS READILY AVAILABLE THE UTILISATION OF CLASS 'A' BEDDING IS FAVOURED TO SECURE THE PIPE STRUCTURE AGAINST FLOODWATER DAMAGE.
9. ONLY CONSIDER INDUCED TRENCH UTILISATION FOR HIGH FILLS ON SINGLE PIPES WHERE A SPECIAL PIPE WOULD OTHERWISE BE REQUIRED.

No.	DATE	ADDITIONS AND AMENDMENTS
0	OCT - 2023	ORIGINAL VERSION

STANDARD PLANS

WESTERN CAPE GOVERNMENT
DEPARTMENT OF INFRASTRUCTURE
TRANSPORT INFRASTRUCTURE BRANCH

PREFABRICATED CONCRETE PIPE CULVERTS

TABULATIONS AND DESIGN NOTES

SCALE : N.T.S.

A2 ORIGINAL

INDEX NO.
WCS/22/2/D1

PLAN NO.
SHEET 1 OF 1

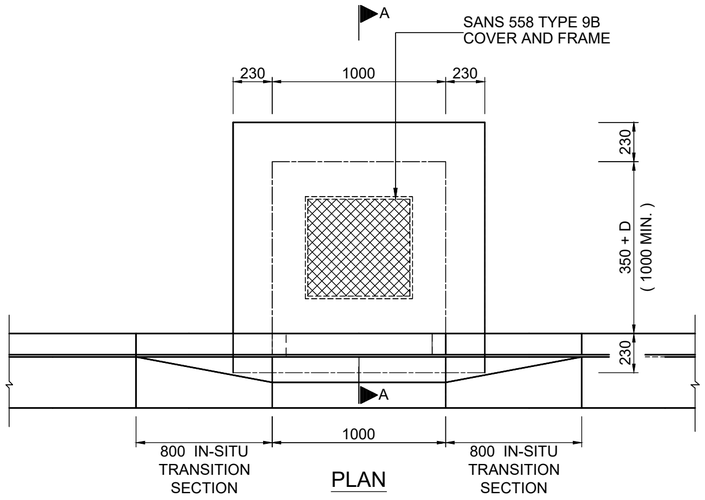

PLAN

NOTES :

1. MINIMUM COVER TO STEEL REINFORCEMENT TO BE 50mm.
2. ALL CONCRETE TO BE CLASS 30/20.
3. FRAME TO BE CAST IN WITH SLAB.
4. STEP IRONS TO BE CALCIMITE OR SIMILAR APPROVED.
5. ALL MANHOLE COVERS AND TOP SLABS TO BE CONSTRUCTED TO CONFORM TO ROAD, WALKWAY, OR SURROUNDING SURFACE LEVELS AND SLOPES.
6. ALL BRICKWORK ON INSIDE OF MANHOLE TO BE PLASTERED.

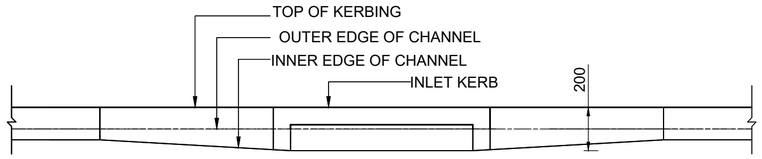

ELEVATION OF KERB INLET

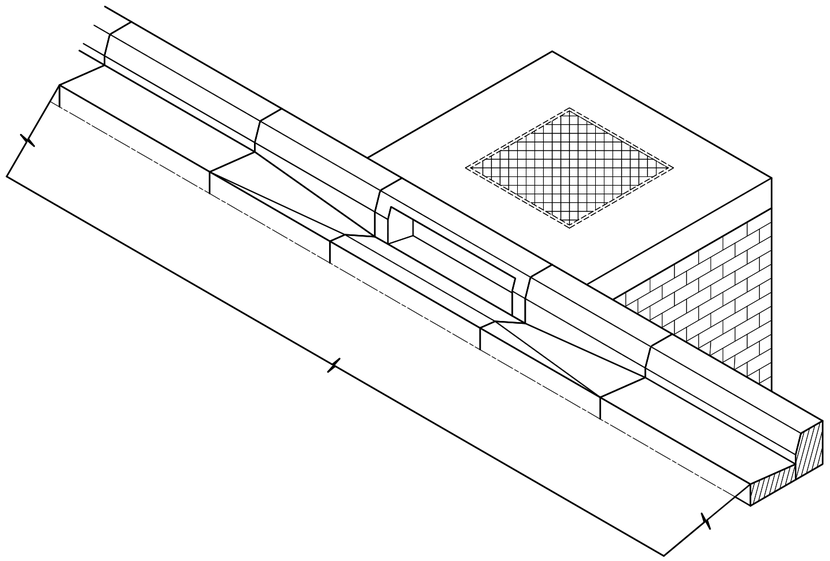

ISOMETRIC VIEW
INLET AND MANHOLE

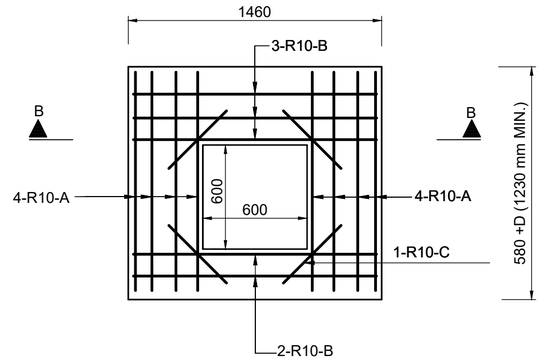

PLAN

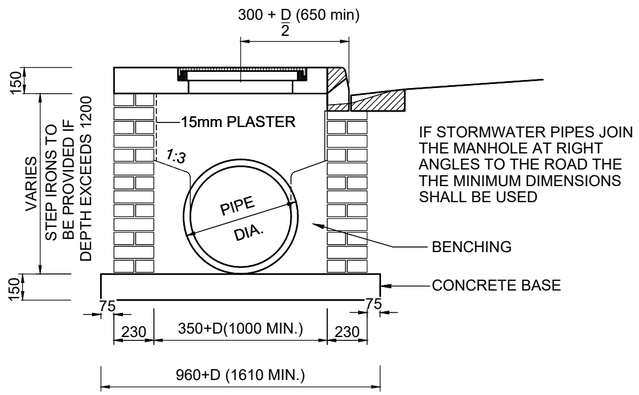

SECTION A-A

BENDING SCHEDULE					
ITEM	BAR	No.	DIA	SKETCH	LENGTH
TOP SLAB	A	8	R10	———	520+D (1150 MIN.)
	B	5	R10	———	1380
	C	4	R10	———	500

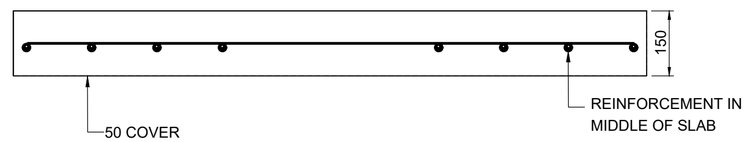

SECTION B-B
REINFORCEMENT OF TOP SLAB

No.	DATE	ADDITIONS AND AMENDMENTS
0	OCT - 2023	ORIGINAL VERSION

STANDARD PLANS

WESTERN CAPE GOVERNMENT
DEPARTMENT OF INFRASTRUCTURE
TRANSPORT INFRASTRUCTURE BRANCH

MANHOLES

DETAILS OF
COMBINED SINGLE KERB INLET AND MANHOLE

SCALE : N.T.S.

A2 ORIGINAL

INDEX NO.
WCS/22/3/C1

PLAN NO.
SHEET 1 OF 5

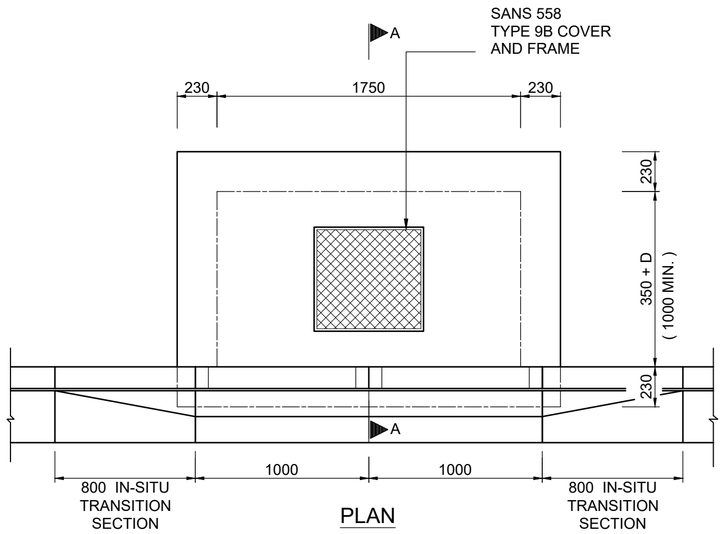

PLAN

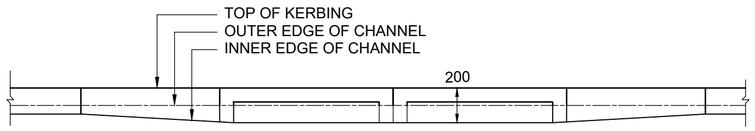

ELEVATION OF KERB INLET

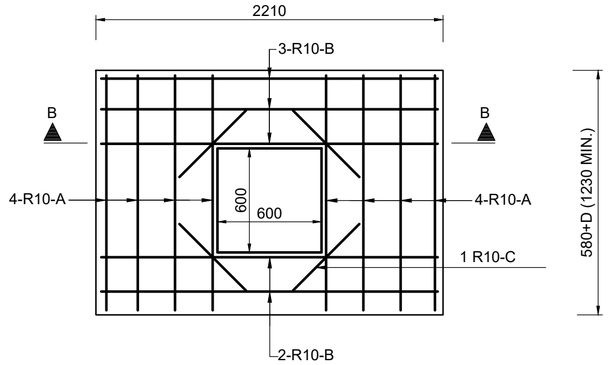

PLAN

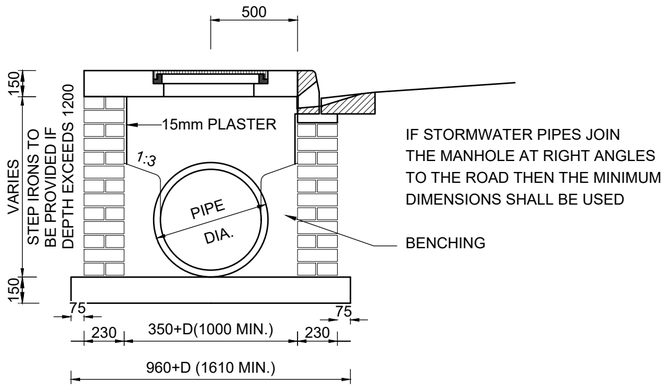

SECTION A-A

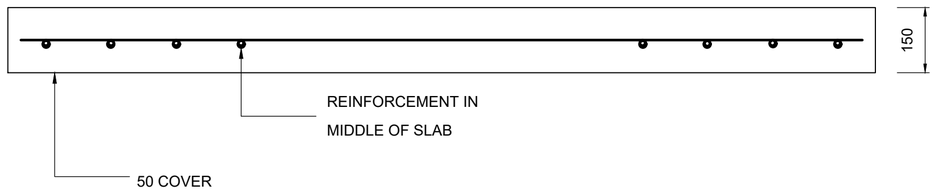

SECTION B-B
REINFORCEMENT OF TOP SLAB

BENDING SCHEDULE					
ITEM	BAR	No.	DIA	SKETCH	LENGTH
TOP SLAB	A	8	R10	———	520+D (1150 MIN.)
	B	5	R10	———	2130
	C	4	R10	____	500

NOTES :

1. MINIMUM COVER TO STEEL REINFORCEMENT TO BE 50mm.
2. ALL CONCRETE TO BE CLASS 30/20.
3. FRAME TO BE CAST IN WITH SLAB.
4. STEP IRONS TO BE CALCIMITE OR SIMILAR APPROVED.
5. ALL MANHOLE COVERS AND TOP SLABS TO BE CONSTRUCTED TO CONFORM TO ROAD, WALKWAY, OR SURROUNDING SURFACE LEVELS AND SLOPES.
6. ALL BRICKWORK ON INSIDE OF MANHOLE TO BE PLASTERED.

No.	DATE	ADDITIONS AND AMENDMENTS
0	OCT - 2023	ORIGINAL VERSION

STANDARD PLANS

WESTERN CAPE GOVERNMENT
DEPARTMENT OF INFRASTRUCTURE
TRANSPORT INFRASTRUCTURE BRANCH

MANHOLES

DETAILS OF COMBINED DOUBLE KERB INLET AND MANHOLE

SCALE : N.T.S.

A2 ORIGINAL

INDEX NO.
WCS/22/3/C2

PLAN NO.
SHEET 2 OF 5

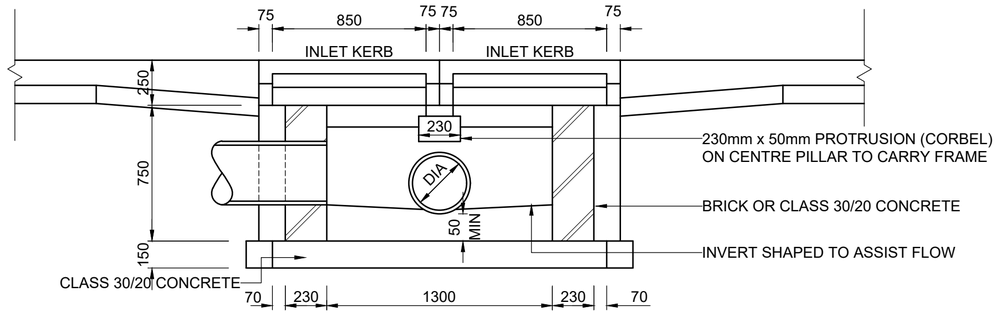

SECTION B-B

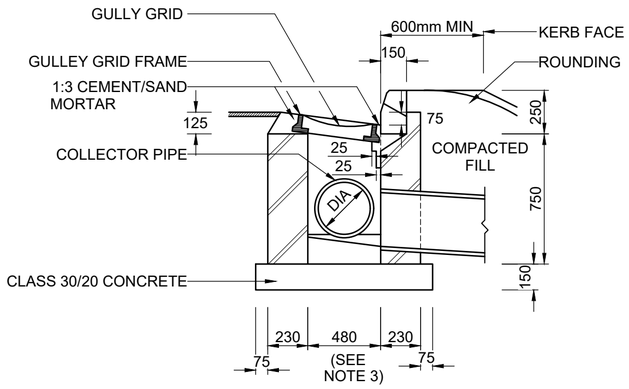

SECTION A-A

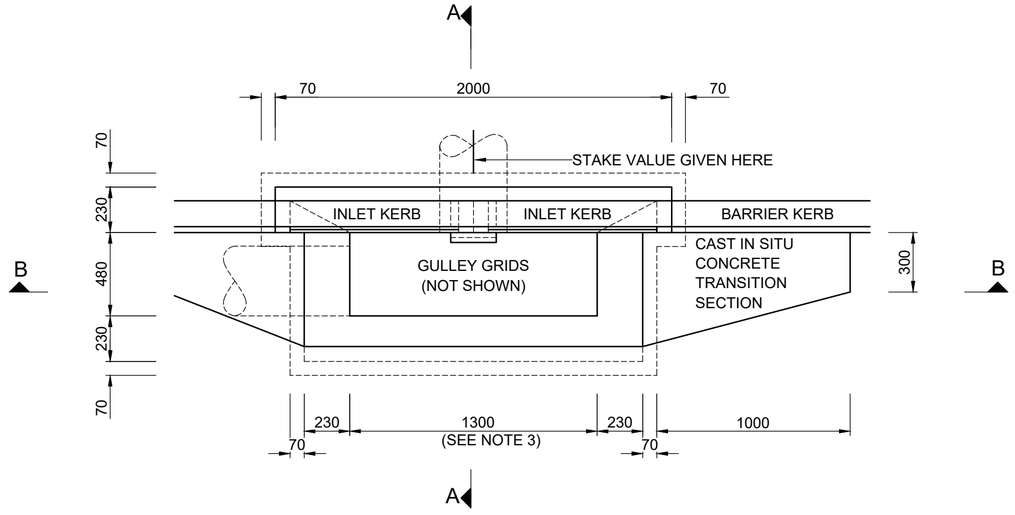

PLAN

NOTES:

1. THE LEVEL OF THE GULLEY GRID IS DROPPED 75mm AT THE INLET KERB TO ASSIST FLOW.
2. ALL BRICKWORK ON INSIDE OF MANHOLE TO BE PLASTERED.
3. DIMENSIONS TO SUIT HEAVY DUTY GULLY GRID AND FRAME BESAANS DU PLESSIS 2898 OR SIMILAR APPROVED POLYMER CONCRETE GRID AND FRAME.
4. ALL CONCRETE TO BE CLASS 30/20.
5. FOR DETAIL OF PRECAST INLET KERB REFER TO DWG. No. WCS/23/1/C1.

No.	DATE	ADDITIONS AND AMENDMENTS
0	OCT - 2023	ORIGINAL VERSION

STANDARD PLANS

WESTERN CAPE GOVERNMENT
DEPARTMENT OF INFRASTRUCTURE
TRANSPORT INFRASTRUCTURE BRANCH

MANHOLES

TYPICAL DETAIL OF KERB INLET

SCALE : N.T.S.

A2 ORIGINAL

INDEX NO.
WCS/22/3/C3

PLAN NO.
SHEET 3 OF 5

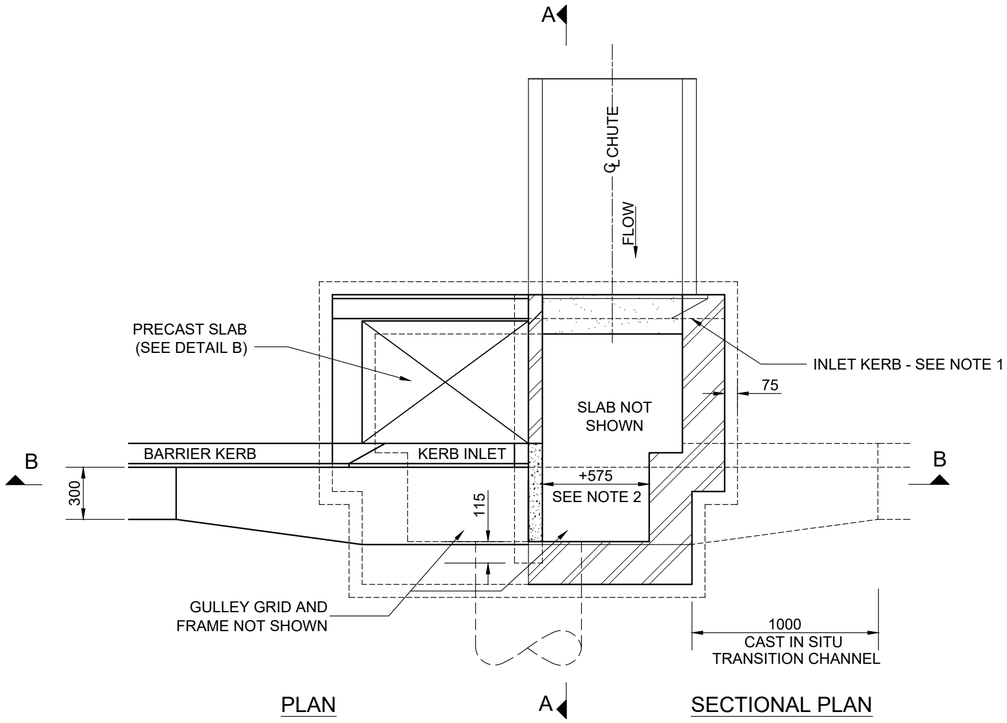

PLAN

SECTIONAL PLAN

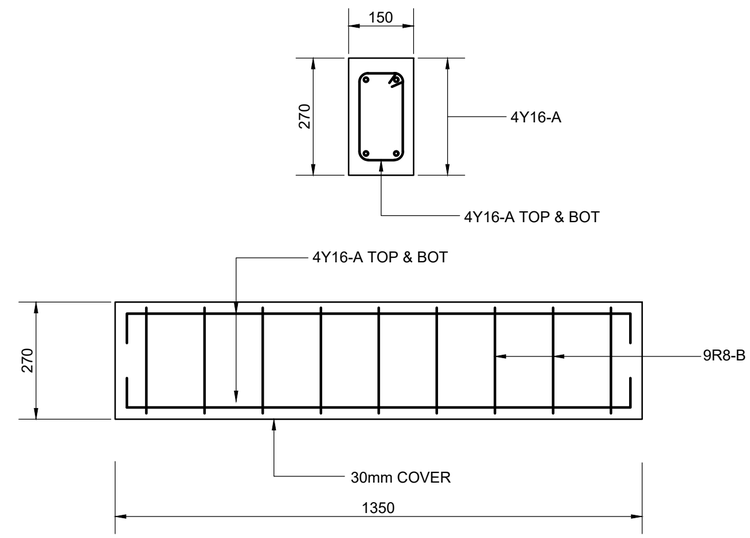

DETAIL A: PRECAST BEAM

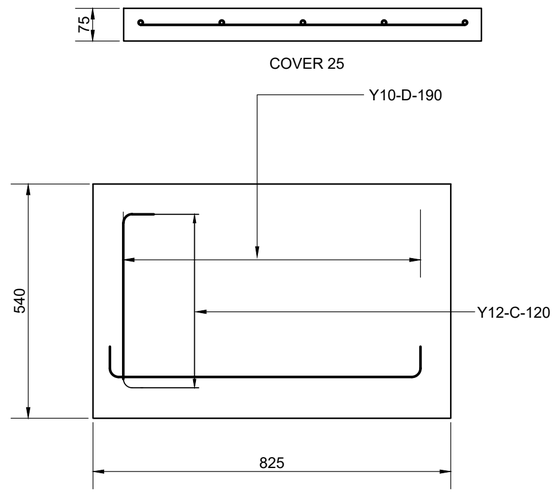

DETAIL B: PRECAST SLAB

BENDING SCHEDULE					
ITEM	BAR	No.	DIA	SKETCH	LENGTH
PRECAST BEAM	A	4	Y16	1275 / 80	1430
	B	9	R8	200 / 90	700
PRECAST SLAB	C	5	Y12	765 / 80	900
	D	5	Y10	480 / 80	600

NOTES:

1. REFER TO DWG. No. WCS/23/1/C1 FOR DETAILS OF INLET KERB.
2. DIMENSION OF CHAMBER TO SUIT HEAVY DUTY GULLY GRID AND FRAME BESAANS DU PLESSIS 2898 OR SIMILAR APPROVED POLYMER CONCRETE GRID AND FRAME.
3. ALL CONCRETE TO BE CLASS 30/20.
4. PROVIDE CENTRAL SUPPORT 150mm WIDE IF MORE THAN ONE INLET KERB IS REQUIRED.

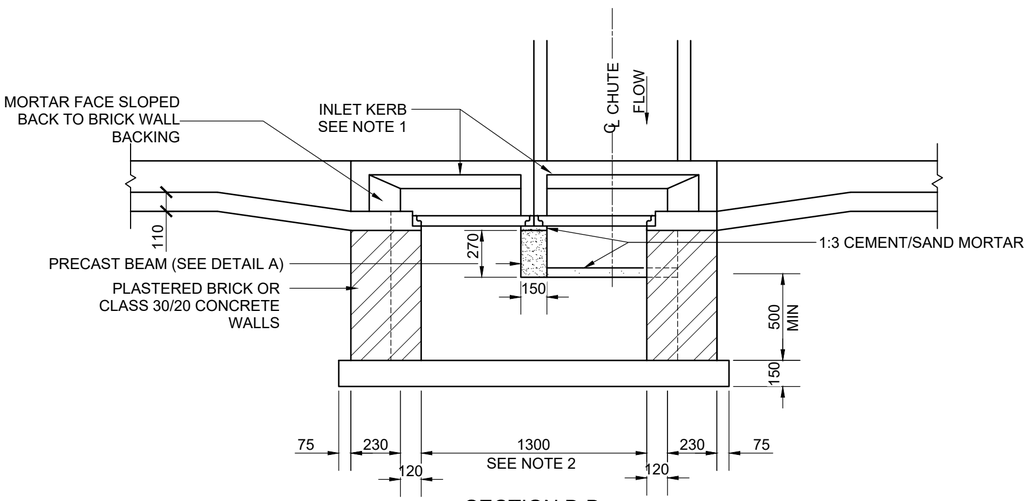

SECTION B-B

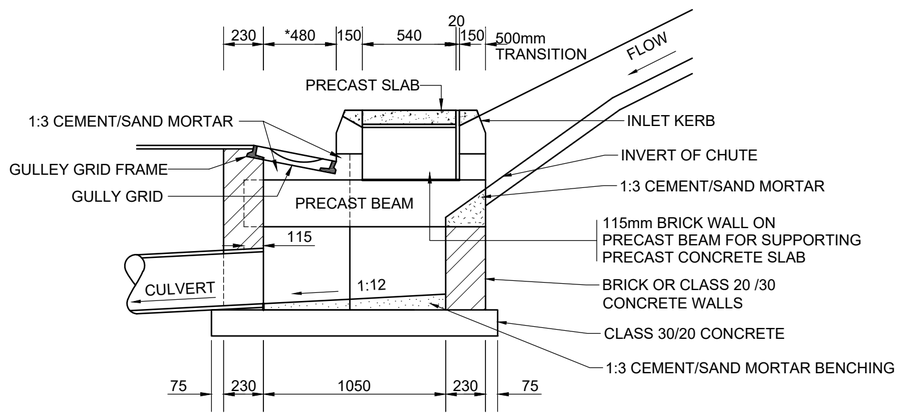

SECTION A-A

No.	DATE	ADDITIONS AND AMENDMENTS
0	OCT - 2023	ORIGINAL VERSION

STANDARD PLANS

WESTERN CAPE GOVERNMENT
DEPARTMENT OF INFRASTRUCTURE
TRANSPORT INFRASTRUCTURE BRANCH

MANHOLES

TYPICAL DETAIL OF MANHOLE AND KERB INLET WITH CHUTE

SCALE : N.T.S.

A2 ORIGINAL

INDEX NO.
WCS/22/3/C4

PLAN NO.
SHEET 4 OF 5

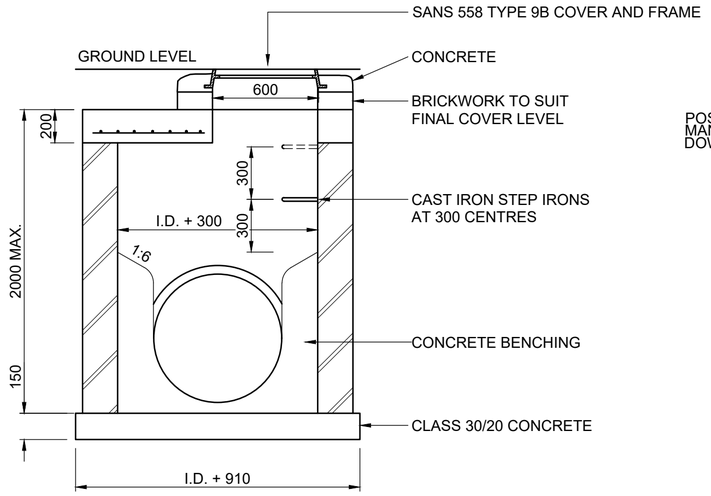

SECTION D-D

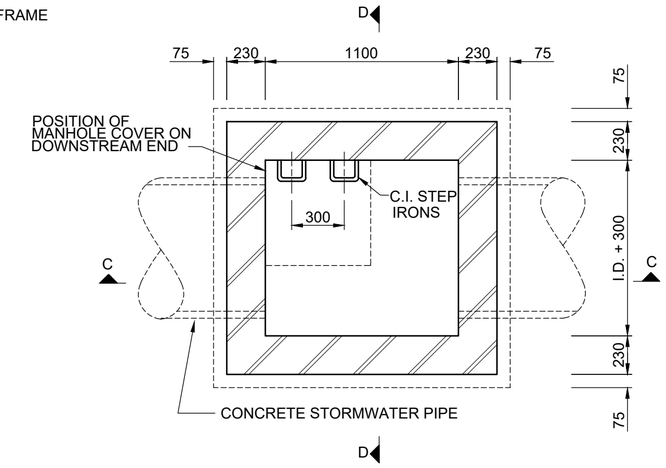

SECTIONAL PLAN

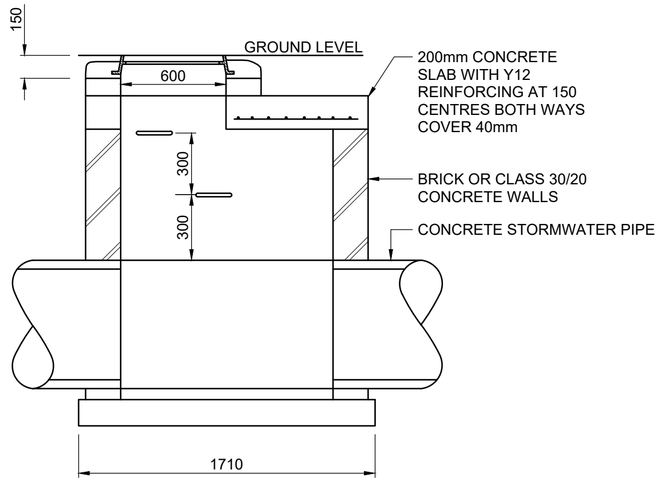

SECTION C-C

NOTES:

1. ALL CONCRETE TO BE CLASS 30 /20
2. I.D. = INTERNAL DIAMETER

STORMWATER MANHOLES FOR PIPE DIAMETER > 675mm

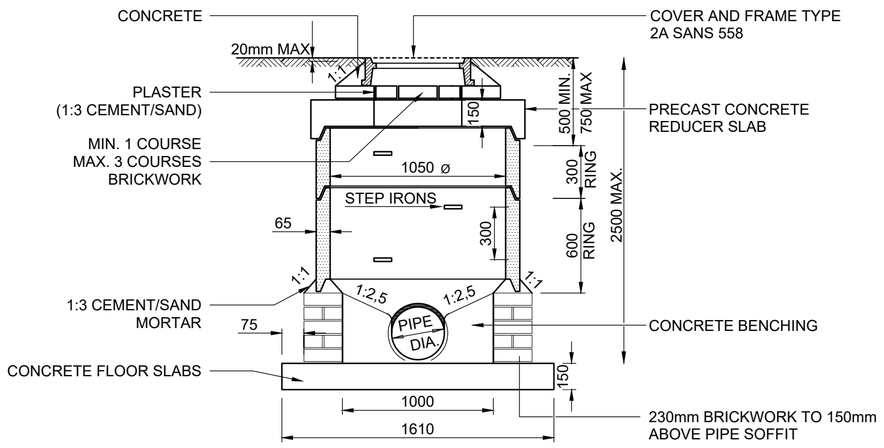

SECTION A-A
CIRCULAR MANHOLE USING PRECAST CONCRETE RINGS

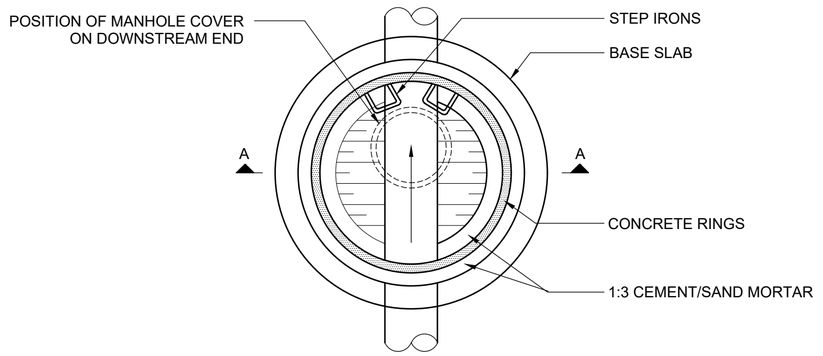

PLAN
MANHOLES UP TO 2,5m DEEP

NOTES:

1. ALL CONCRETE TO BE CLASS 30/20.
2. PRECAST CONCRETE PIPE SECTIONS IN ACCORDANCE WITH SANS 1294.

STORMWATER MANHOLES FOR PIPE DIAMETER ≤ 675mm

No.	DATE	ADDITIONS AND AMENDMENTS
0	OCT - 2023	ORIGINAL VERSION

STANDARD PLANS

WESTERN CAPE GOVERNMENT
DEPARTMENT OF INFRASTRUCTURE
TRANSPORT INFRASTRUCTURE BRANCH

MANHOLES

TYPICAL STORMWATER MANHOLES

SCALE : N.T.S.

A2 ORIGINAL

INDEX NO. WCS/22/3/C5

PLAN NO. SHEET 5 OF 5

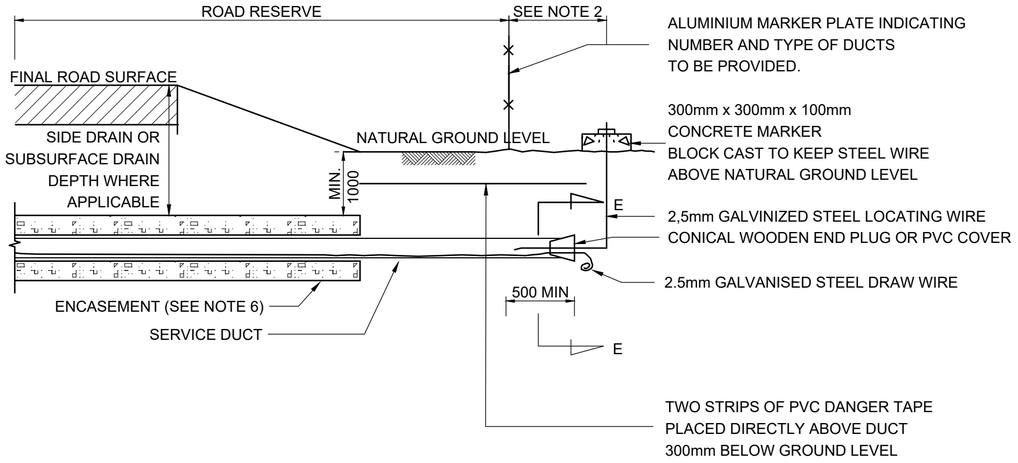

LONGITUDINAL SECTION OF SERVICE DUCT

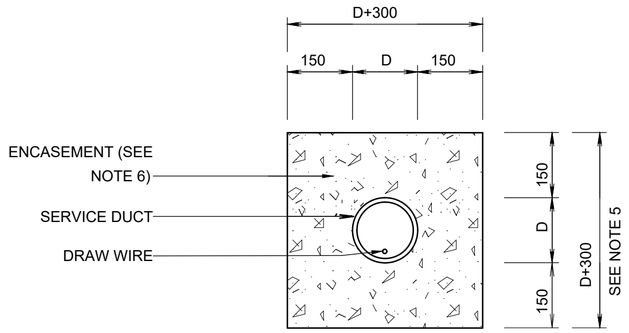

SECTION E-E

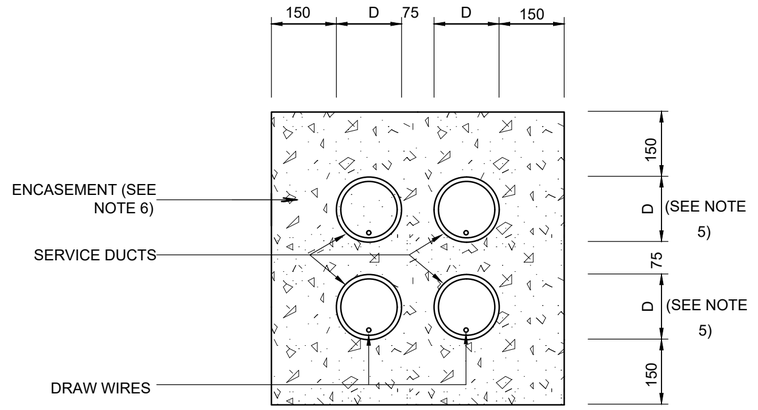

TYPICAL CROSS-SECTION OF MULTIPLE SERVICE DUCT

DUCTS WITHOUT INSTALLED SERVICE

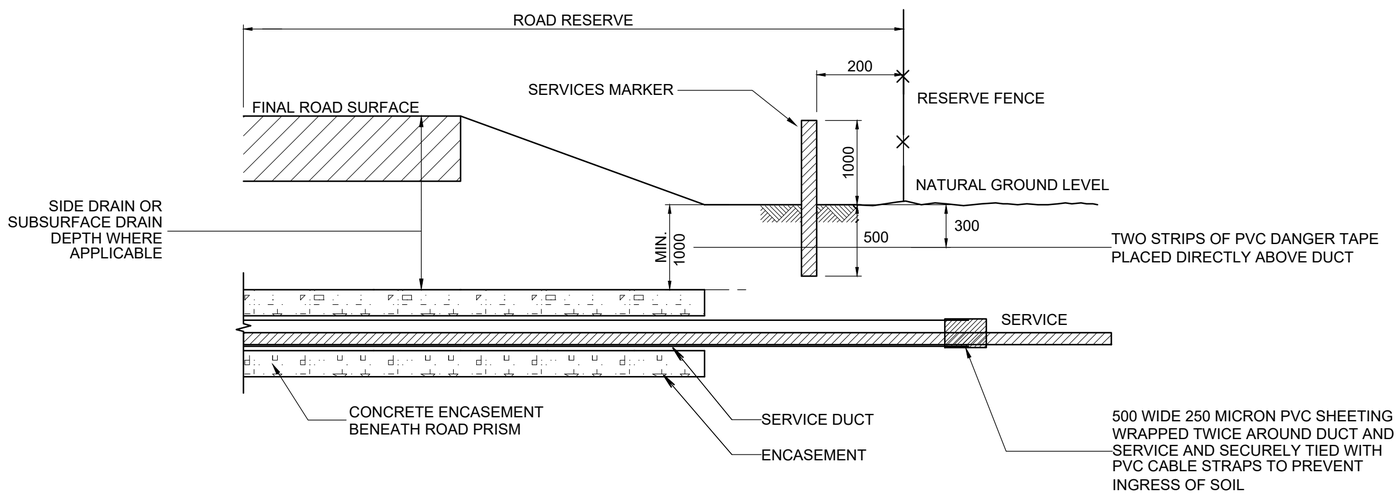

DUCT WITH INSTALLED SERVICE

NOTES :

1. P.V.C. SERVICE DUCT PIPES MUST COMPLY WITH SANS 791.
2. DUCTS MUST EXTEND BEYOND ROAD RESERVE BOUNDARIES, 1000mm
3. SERVICE DUCT TO BE LAID AT A MIN. SLOPE 0F 1%.
4. FOR POSITIONS AND SIZES OF SERVICE DUCTS REFER TO LAYOUT PLANS.
5. D MAXIMUM = 200mm.
6. ENCASEMENT FOR DEPTH <2,0m : CONCRETE CLASS 20/20
   ENCASEMENT FOR DEPTH >2,0m : SOILCRETE (1:12 CEMENT:SOIL)

No.	DATE	ADDITIONS AND AMENDMENTS
0	OCT - 2023	ORIGINAL VERSION

STANDARD PLANS

WESTERN CAPE GOVERNMENT
DEPARTMENT OF INFRASTRUCTURE
TRANSPORT INFRASTRUCTURE BRANCH

SERVICE DUCTS

DETAILS OF SERVICES DUCTS FOR RURAL ROADS

SCALE : N.T.S.

A2 ORIGINAL

INDEX NO.
WCS/22/4/C1

PLAN NO.
SHEET 1 OF 2

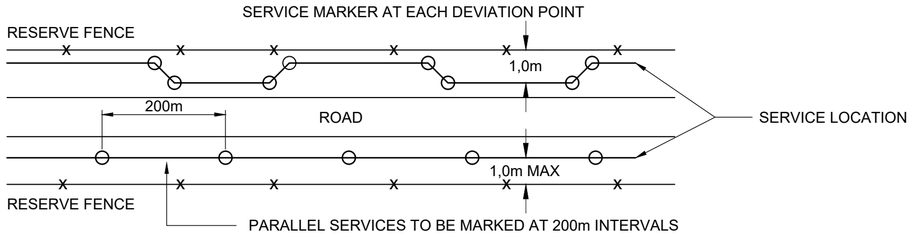

MARKERS FOR PARALLEL UNDERGROUND SERVICES WITHIN ROAD RESERVE

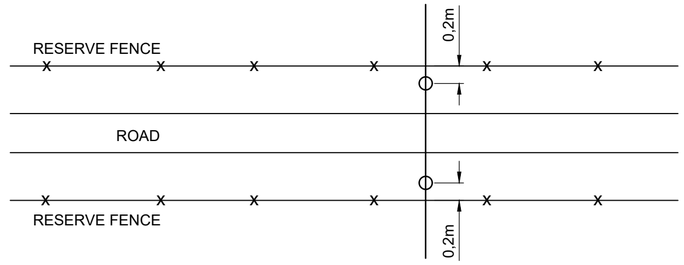

MARKERS FOR UNDERGROUND SERVICES CROSSING ROAD RESERVE

POSITION OF SERVICES MARKERS

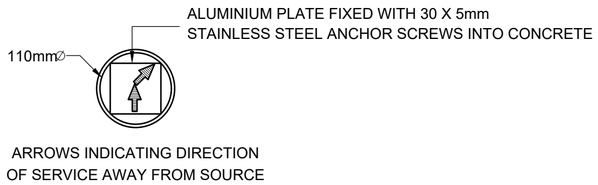

DETAIL A

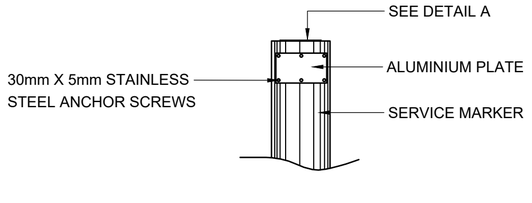

DETAIL B

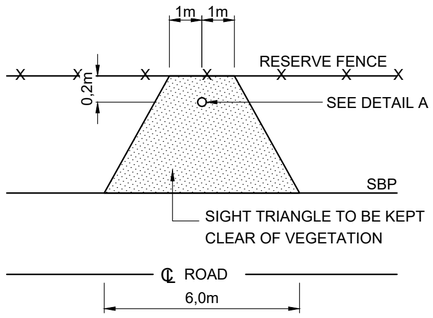

PLACING OF SERVICES MARKER

SERVICE COLOUR CODES	
TYPE OF SERVICE	COLOUR
PETRONET PIPELINES	ORANGE
ESKOM CABLES	RED
TELKOM CABLES	YELLOW
ELECT.CABLES (PRIVATE)	RED
WATER PIPELINES	BLUE
TRANSTEL CABLES	BROWN

NOTES:

1. SERVICES MARKERS TO BE uPVC CLASS 9 PIPES FILLED WITH CONCRETE CLASS 15/20 (1:3:6 MIX).
2. LENGTH OF PIPE : 1000mm ABOVE GROUND
   500mm BELOW GROUND
3. SERVICE MARKER TO BE PAINTED ACCORDING TO COLOUR CODE AS SHOWN, IF REQUIRED BY ROAD AUTHORITY.
4. EACH MARKER IS TO HAVE AN ALUMINIUM PLATE WITH THE DETAIL OF SERVICE AND OWNER PUNCHED ONTO IT (SEE DETAIL B).
5. THE TOP OF EACH MARKER IS ALSO TO HAVE AN ALUMINIUM PLATE WITH ARROWS PUNCHED ONTO IT INDICATING THE DIRECTION OF THE SERVICE AWAY FROM IT'S SOURCE. (SEE DETAIL A)
6. SERVICES MARKERS TO BE PROVIDED ON ALL ROADS.

No.	DATE	ADDITIONS AND AMENDMENTS
0	OCT - 2023	ORIGINAL VERSION

STANDARD PLANS

WESTERN CAPE GOVERNMENT
DEPARTMENT OF INFRASTRUCTURE
TRANSPORT INFRASTRUCTURE BRANCH

SERVICE DUCTS

DETAILS OF SERVICE DUCT MARKERS

SCALE : N.T.S.

A2 ORIGINAL

INDEX NO.
WCS/22/4/C2

PLAN NO.
SHEET 2 OF 2

INLET

CONDITION	TYPE	
V < 3.0 m/s Fr < 1.0 m/s	1	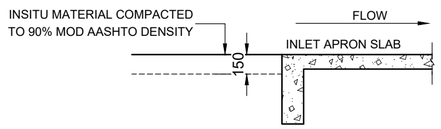
3.0 m/s <V< 4 m/s Fr < 2.5	2	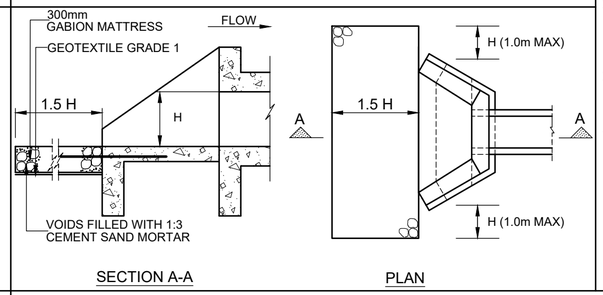
V > 4 m/s 2.5 <Fr<4.0	3	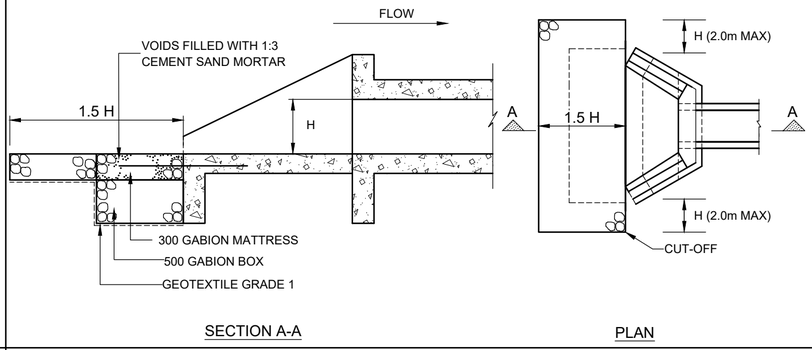
V > 4 m/s Fr > 4.0 SLOPE < 15% SPECIAL CONDITION	4	INLET AS FOR TYPE 3
V > 4 m/s Fr > 4.0 SLOPE > 15% SPECIAL CONDITION	5	INLET AS FOR TYPE 3

NOTES:

1. V = INLET VELOCITY OF NATURAL STREAM AT INLET.
2. Fr = FROUDE NUMBER OF NATURAL STREAM AT INLET
3. SOIL CONDITIONS TO BE TAKEN INTO ACCOUNT
4. .GABIONS TO BE OMITTED WHERE ROCK IS PRESENT.

OUTLET

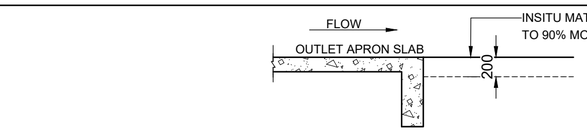

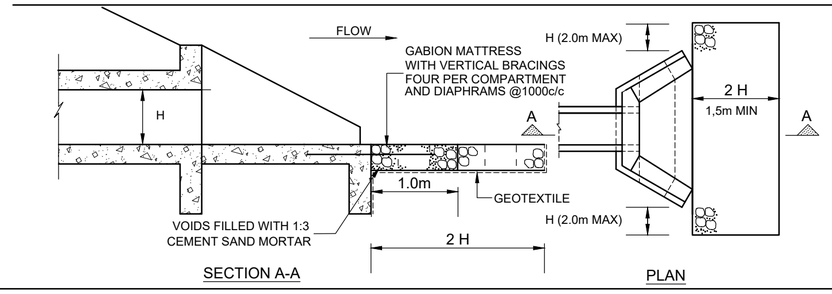

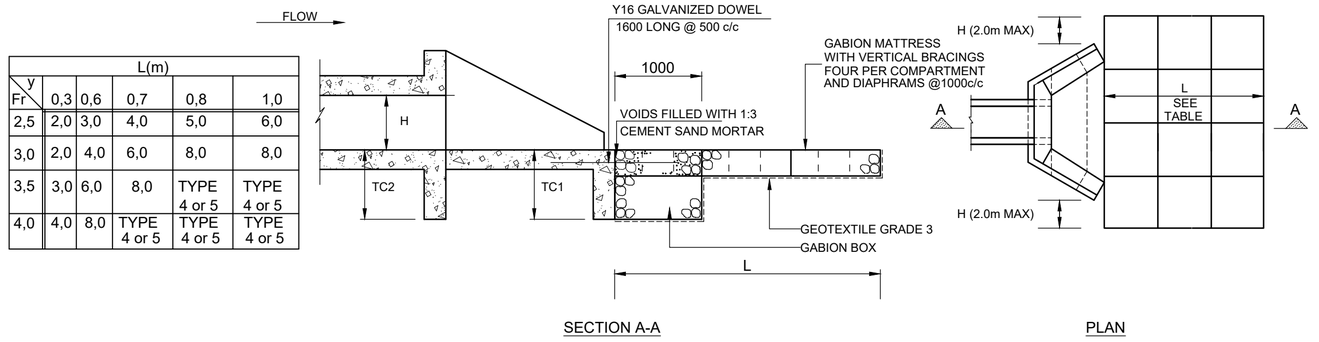

L(m)					
y / Fr	0,3	0,6	0,7	0,8	1,0
2,5	2,0	3,0	4,0	5,0	6,0
3,0	2,0	4,0	6,0	8,0	8,0
3,5	3,0	6,0	8,0	TYPE 4 or 5	TYPE 4 or 5
4,0	4,0	8,0	TYPE 4 or 5	TYPE 4 or 5	TYPE 4 or 5

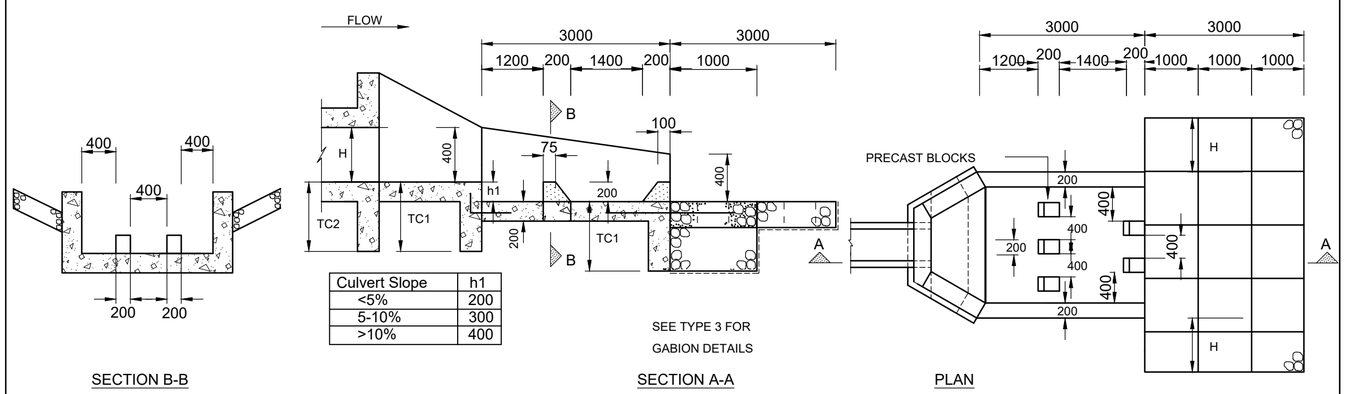

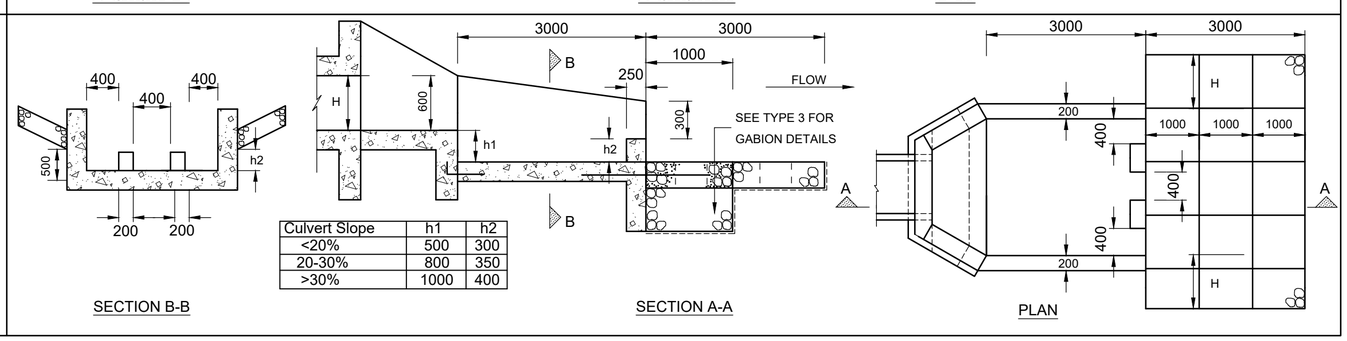

No.	DATE	ADDITIONS AND AMENDMENTS
0	OCT - 2023	ORIGINAL VERSION

STANDARD PLANS

WESTERN CAPE GOVERNMENT
DEPARTMENT OF INFRASTRUCTURE
TRANSPORT INFRASTRUCTURE BRANCH

CONCRETE CULVERTS

INLET AND OUTLET PROTECTION DETAILS

SCALE : N.T.S.

A2 ORIGINAL

INDEX NO. WCS/22/5/D1

PLAN NO. SHEET 1 OF 1

ROUTE No.	STAKE DISTANCE	GENERAL LAYOUT DWG.No.	CATCHMENT AREA	DESIGN RETURN PERIOD	DESIGN DISCHARGE Q (CHECK Q2t)	FORMATION WIDTH F	CULVERT DIMENSIONS (NOMINAL INTERNAL) TYPE	CULVERT STRENGTH CLASS	BUILD TO WORKING DWG. No.	SLOPE	SKEW ANGLE S	ROAD LEVELS			INVERT LEVELS			HW (CHECK Q2t)	HW/D OR HW/H	HWL	FREEBOARD TO ROAD SHOULDER (CHECK Q2t) f	MAX. INLET FLOW VELOCITY	MAX. OUTLET FLOW VELOCITY	FILL HEIGHT			HORIZONTAL LENGTHS			CUT-OFF WALL DEPTHS		CULVERT UNITS (SEE NOTE 5)	EROSION PROTECTION		REMARKS
												LEFT RLL	CENTRE RLC	RIGHT RLR	LEFT ILL	CENTRE ILC	RIGHT ILR							h_1	h_2	h_3	LEFT LL	RIGHT LR	TOTAL LENGTH LT	TC1	TC2		INLET TYPE	OUTLET TYPE	
	km	No.	km²	YEAR	m³/s	m	NUMBER/S x H OR D	D LOAD S CLASS	No.	%	DEGREES	m	m	m	m	m	m	m	-	m	m	m/s	m/s	m	m	m	m	m	m	m	m	No.	(SEE LEGEND BELOW)		
1/6	57,420	GD 18/205	5,50	10	0,4(0,6)	11,00	1 x 600 Ø	100D	GD 18/301	0,6	90	1516,18	1516,31	1516,18	1515,10	1515,14	1515,18	0,94	1,10	1515,85	0,05	1,73	1.73	0,42	0,51	0,34	6,2	6,0	12,2	0,8	0,8	10,0	1	2	ONE OF FIVE CULVERTS FOR CATCHMENT AREA

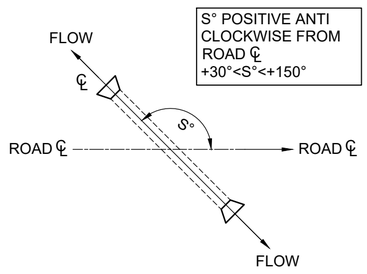

S° POSITIVE ANTI CLOCKWISE FROM ROAD ℄
+30°<S°<+150°

SKEW ANGLE DEFINITION DIAGRAM

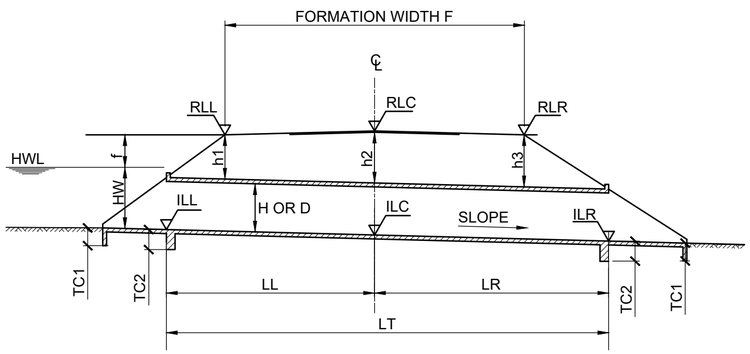

TYPICAL CROSS-SECTION ALONG CULVERT ℄

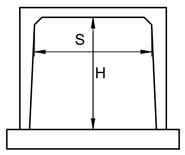

PORTAL CULVERT SECTION

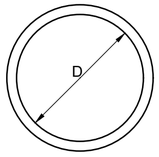

PIPE CULVERT SECTION

NOTES

1. DESIGN Q FOR CULVERTS NORMALLY 1:10 YEAR RECURRENCE INTERVAL UNLESS OTHERWISE SPECIFIED AND IN ACCORDANCE WITH LATEST DRAINAGE MANUAL
2. THE VALUE IN BRACKETS IS THE VALUE FOR A CHECK DISCHARGE OF Q2t DESIGN DISCHARGE
3. FOR DETAILS ON PRECAST CONCRETE RECTANGULAR BOX CULVERTS REFER TO DRAWING NUMBERS WCS/22/1/C1 TO C8 AND WCS/22/1/D1.
4. FOR DETAILS ON PIPE CULVERTS REFER TO DWG. No. WCS/22/2/C1 TO C6 AND WCS/22/2/D1.
5. STANDARD PORTAL LENGTH = 1220
   STANDARD PIPE LENGTH = 2440
6. NOT LISTED ARE PIPE CULVERTS CONNECTING SIDE DRAINS WHERE PROPERTY ACCESSES ARE BEING PROVIDED, Ø 600mm MINIMUM TO BE PROVIDED, EXCEPT WHERE OTHERWISE SHOWN. ALSO REFER TO PROJECT SPECIFICATIONS FOR TABLE INDICATING SPECIFIC NEEDS.

EROSION PROTECTION LEGEND:

1 - 5: INLET TYPES 1 - 5 AS PER DWG. No. WCS/22/5/D1
KI: KERB INLET AS PER DWG.'s No. WCS/22/3/C1 TO WCS/22/3/C4
MH: MANHOLE AS PER DWG. No. WCS/22/3/C5
CH: CHUTES AS PER DWG. No. WCS/23/2/C3

THE DRAINAGE SCHEDULE TO BE DRAWN ON AN A0 SIZE DRAWING USING A GEOMETRIC DESIGN TITLE BLOCK

No.	DATE	ADDITIONS AND AMENDMENTS
0	OCT - 2023	ORIGINAL VERSION

STANDARD PLANS

WESTERN CAPE GOVERNMENT
DEPARTMENT OF INFRASTRUCTURE
TRANSPORT INFRASTRUCTURE BRANCH

PREFABRICATED CONCRETE CULVERTS

TYPICAL DRAINAGE SCHEDULE DRAWING

SCALE : N.T.S.

A2 ORIGINAL

INDEX NO. WCS/22/6/D1

PLAN NO. SHEET 1 OF 1

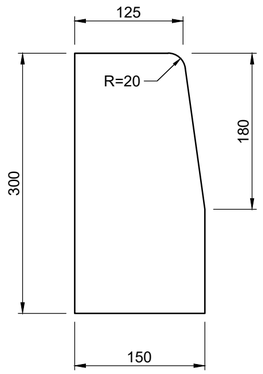

FIG 3

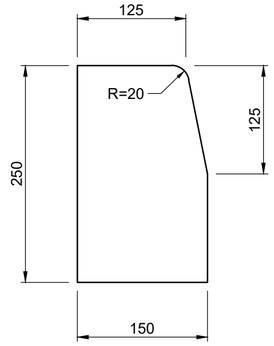

FIG 4

BARRIER KERBS

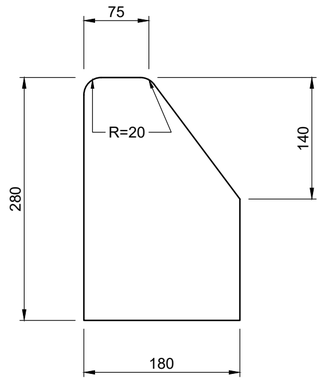

FIG 7

SEMI-MOUNTABLE KERB

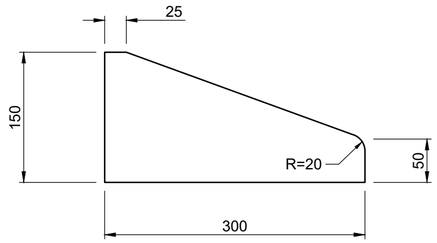

FIG 8

MOUNTABLE KERB

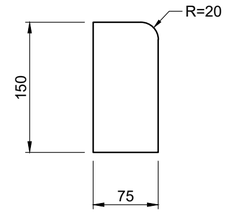

FIG 11

EDGING

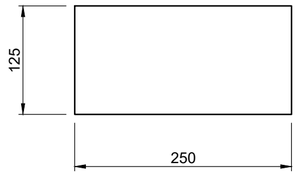

FIG 13

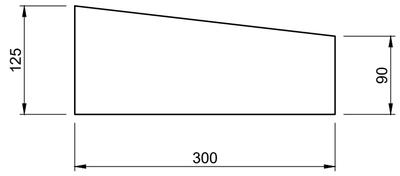

FIG 14

CHANNELS

BENDING SCHEDULE					
ITEM	BAR	No.	DIA	SKETCH	LENGTH
PRECAST INLET KERB	e	2	Y10	925; 190	1305
	f	1	Y10	925	925
	g	3	Y6	110; 110; 80	470

NOTE :
SEE SANS 927 : FIG.3-14

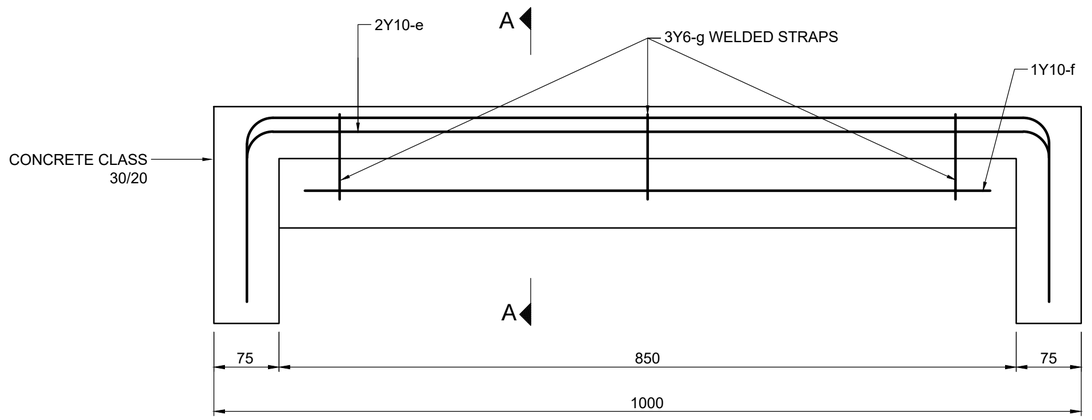

FRONT ELEVATION

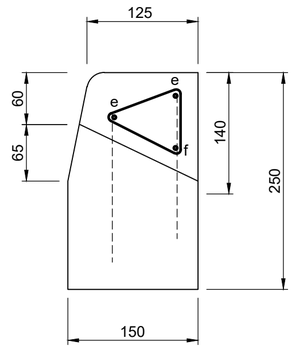

SECTION A-A

PRECAST INLET KERB

No.	DATE	ADDITIONS AND AMENDMENTS
0	OCT - 2023	ORIGINAL VERSION

STANDARD PLANS

WESTERN CAPE GOVERNMENT
DEPARTMENT OF INFRASTRUCTURE
TRANSPORT INFRASTRUCTURE BRANCH

KERBS

PRECAST KERB DETAILS

SCALE : N.T.S.

A2 ORIGINAL

INDEX NO.
WCS/23/1/C1

PLAN NO.
SHEET 1 OF 4

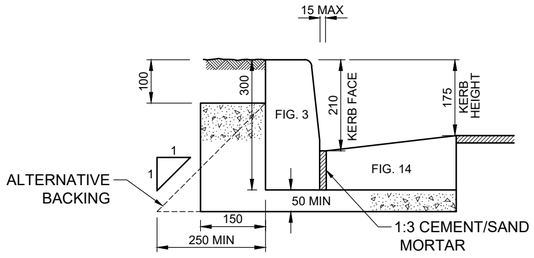

TYPE 3A

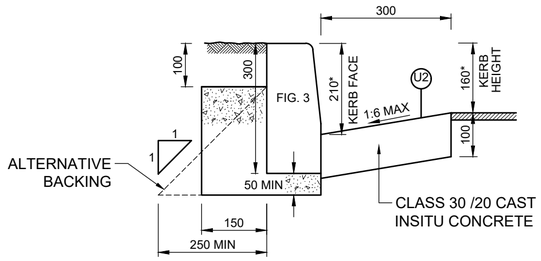

TYPE 3B (AT SIDEWALKS)

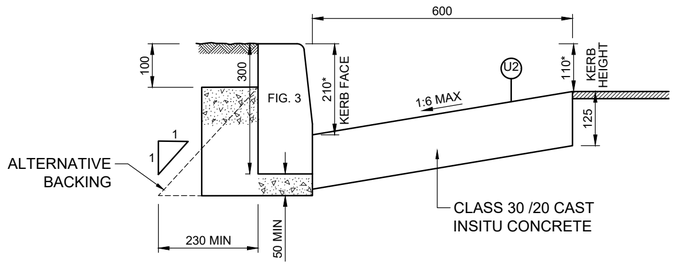

TYPE 3B (ON HIGH FILLS)

PRECAST CHANNEL

CAST IN SITU CHANNEL

* DIMENSION SHOWN FOR 1:6 SLOPE OF CHANNEL

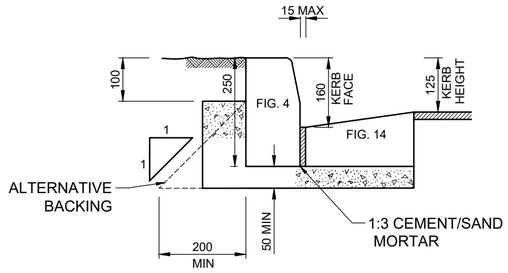

TYPE 4A

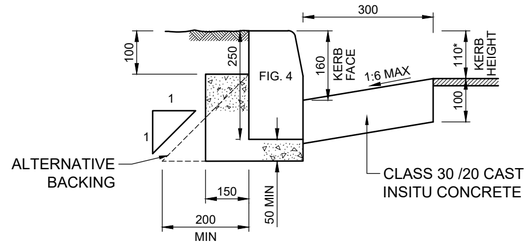

TYPE 4B

NOTES :

1. IN-SITU MATERIAL SURROUNDING THE CHANNEL AND KERB MUST BE APPROVED BY THE ENGINEER AS ADEQUATE FOUNDATION MATERIAL.

2. CONCRETE BACKING TO PRECAST KERBS : CLASS 20/20

3. CAST IN SITU KERBS AND CHANNELS (CLASS 30/20)
   (a) CONSTRUCTION JOINTS AT 2,0m INTERVALS.
   (b) 10mm EXPANSION JOINTS AT 10m CENTRES FILLED WITH SOFT BOARD OR APPROVED EQUIVALENT AND 20mm x 10mm SILICONE SEALANT OR APPROVED EQUIVALENT
   (c) CAST ALTERNATIVE SECTIONS.

4. PRECAST OR CAST IN SITU CHANNEL TO BE USED WITH ROAD CROSSFALL CONFIGURATION ONLY ON INSTRUCTION OF THE ENGINEER.

5. PRECAST KERBS AND CHANNELS-10mm EXPANSION JOINTS AT 10m CENTRES FILLED WITH SOFT BOARD OR APPROVED EQUIVALENT AND 20mm x 10mm SILICONE SEALANT OR APPROVED EQUIVALENT

PRECAST CHANNEL

CAST IN SITU CHANNEL

* DIMENSION SHOWN FOR 1:6 SLOPE OF CHANNEL

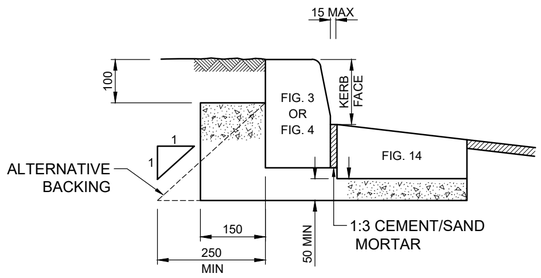

TYPE 3C OR 4C

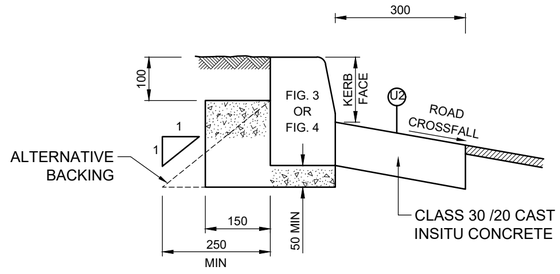

TYPE 3D OR 4D

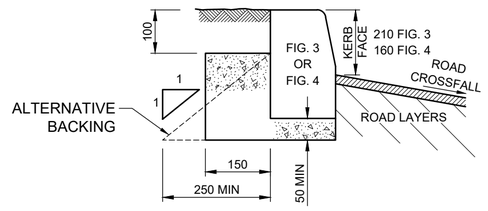

TYPE 3E OR 4E

WITH PRECAST CHANNEL

WITH CAST IN SITU CHANNEL

WITHOUT PRECAST OR CAST IN SITU CHANNEL

TYPICAL CROSSFALL CONFIGURATION (SEE NOTE 4)

No.	DATE	ADDITIONS AND AMENDMENTS
0	OCT - 2023	ORIGINAL VERSION

STANDARD PLANS

WESTERN CAPE GOVERNMENT
DEPARTMENT OF INFRASTRUCTURE
TRANSPORT INFRASTRUCTURE BRANCH

KERBS

BARRIER KERB

SCALE : N.T.S.

A2 ORIGINAL

INDEX NO. WCS/23/1/C2

PLAN NO. SHEET 2 OF 4

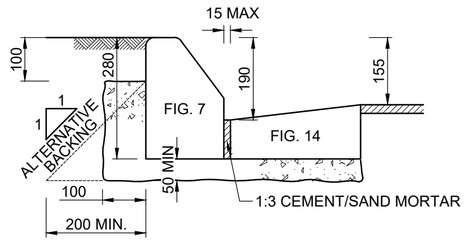

TYPE 7A

PRECAST CHANNEL

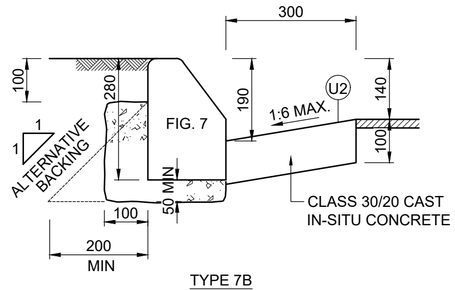

TYPE 7B

IN-SITU CHANNEL

* DIMENSION SHOWN FOR 1:6 SLOPE OF CHANNEL

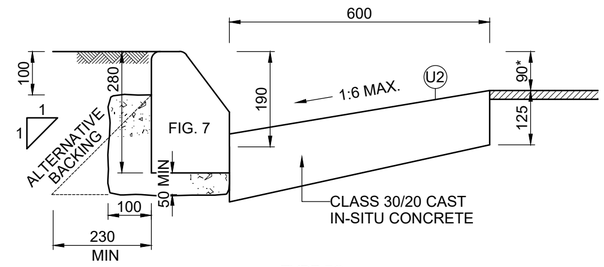

TYPE 7C

IN-SITU CHANNEL

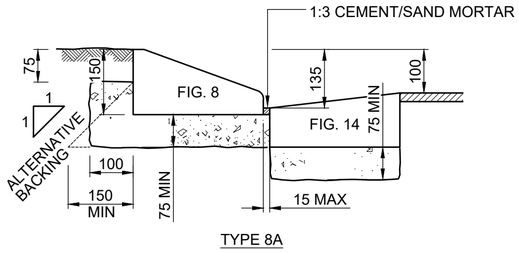

TYPE 8A

PRECAST CHANNEL

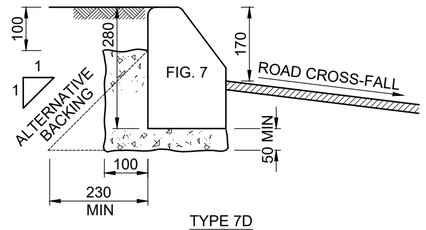

TYPE 7D

CROSS-FALL CONFIGURATION WITHOUT PRECAST OR CAST IN SITU CHANNEL

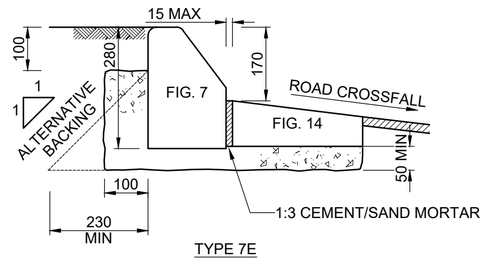

TYPE 7E

CROSSFALL CONFIGURATION WITH PRECAST CHANNEL

(SEE NOTE 4)

SEMI-MOUNTABLE KERBS

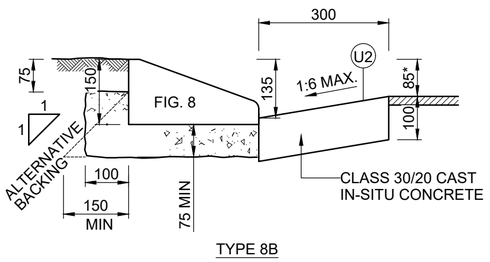

TYPE 8B

INSITU CHANNEL

* DIMENSION SHOWN FOR 1:6 CHANNEL SLOPE

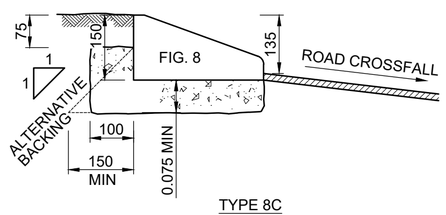

TYPE 8C

CROSS-FALL CONFIGURATION

REFER TO Drg. No. WCS/23/1/C2 FOR NOTES

MOUNTABLE KERBS

No.	DATE	ADDITIONS AND AMENDMENTS
0	OCT - 2023	ORIGINAL VERSION

STANDARD PLANS

WESTERN CAPE GOVERNMENT
DEPARTMENT OF INFRASTRUCTURE
TRANSPORT INFRASTRUCTURE BRANCH

KERBS

SEMI- AND MOUNTABLE KERBS

SCALE : N.T.S.

A2 ORIGINAL

INDEX NO. WCS/23/1/C3

PLAN NO. SHEET 3 OF 4

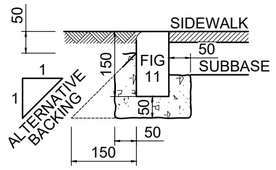

TYPE 12A (SIDEWALK)
PRECAST

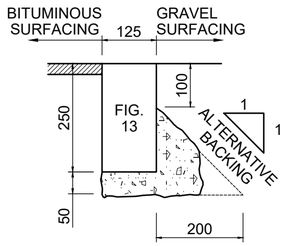

TYPE 12B (URBAN ROADS)
PRECAST

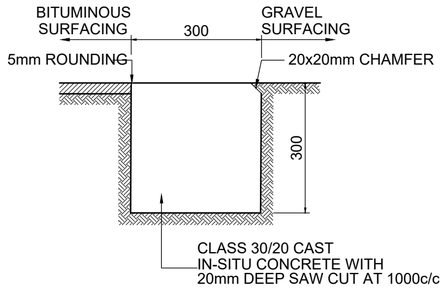

TYPE 12C (RURAL ROADS)
IN-SITU

EDGE BEAMS

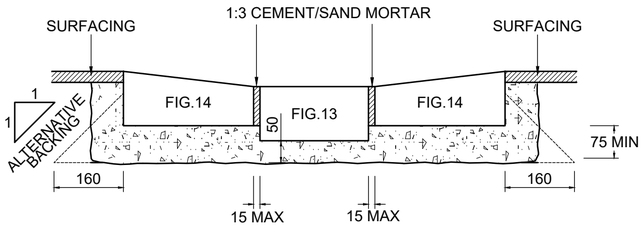

TYPE 14B

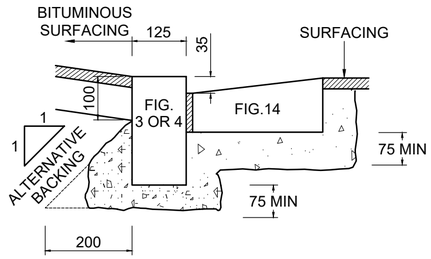

SECTION A-A

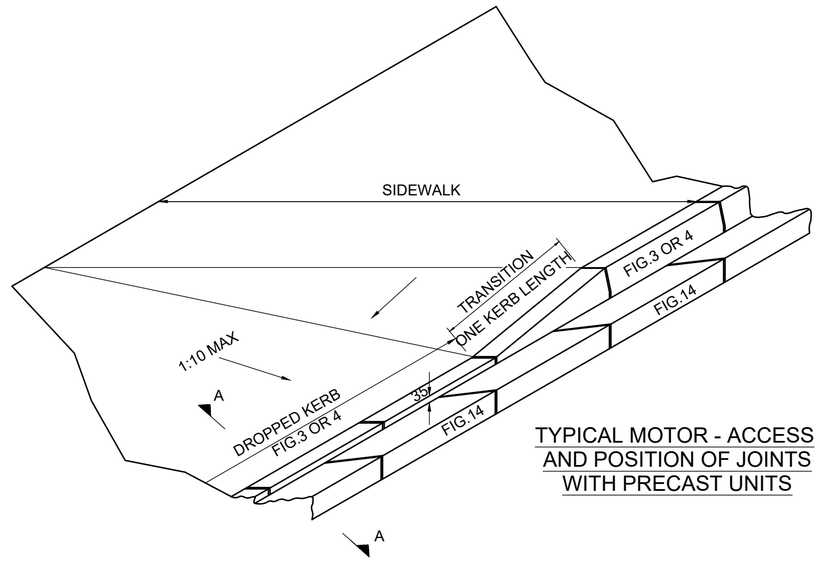

TYPICAL MOTOR - ACCESS
AND POSITION OF JOINTS
WITH PRECAST UNITS

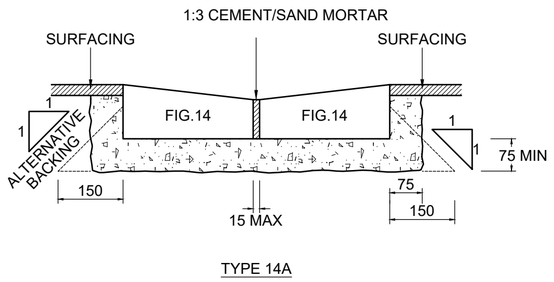

TYPE 14A

PRECAST CHANNELS

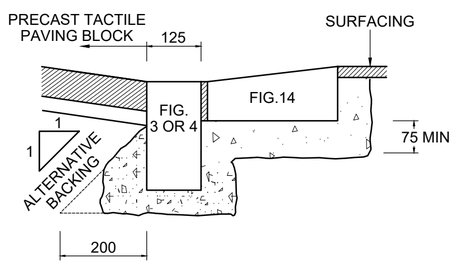

SECTION B-B

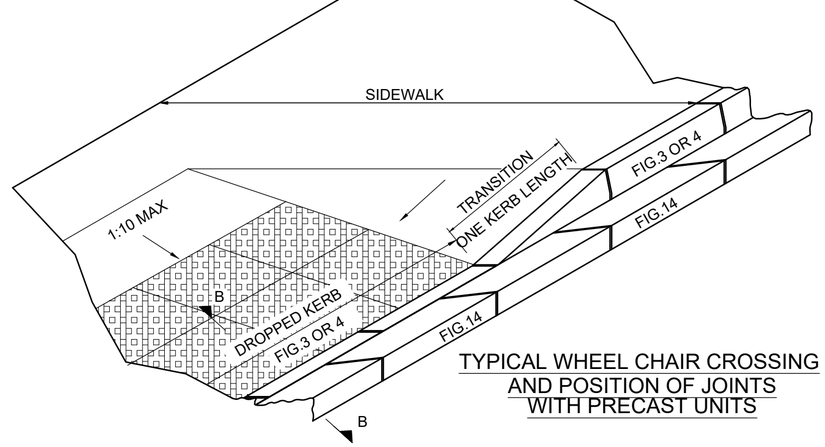

TYPICAL WHEEL CHAIR CROSSING
AND POSITION OF JOINTS
WITH PRECAST UNITS

REFER TO DRG.No.WCS/23/1/C2 FOR NOTES

No.	DATE	ADDITIONS AND AMENDMENTS
0	OCT - 2023	ORIGINAL VERSION

STANDARD PLANS

WESTERN CAPE GOVERNMENT
DEPARTMENT OF INFRASTRUCTURE
TRANSPORT INFRASTRUCTURE BRANCH

KERBS

EDGE BEAMS, CHANNELS AND PLACING OF KERB UNITS

SCALE : N.T.S.

A2 ORIGINAL

INDEX NO.
WCS/23/1/C4

PLAN NO.
SHEET 4 OF 4

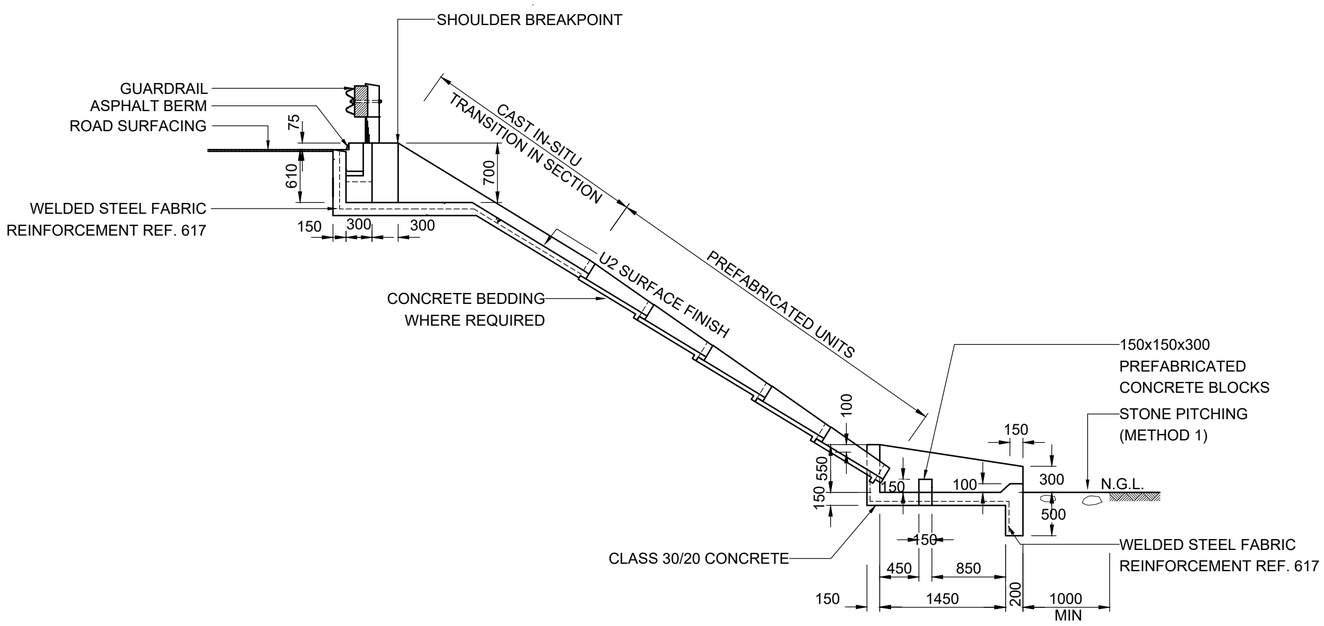

SECTION A-A

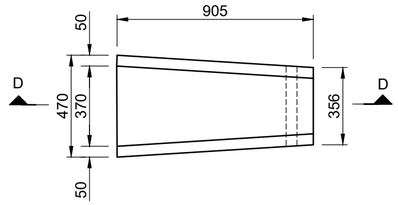

PLAN

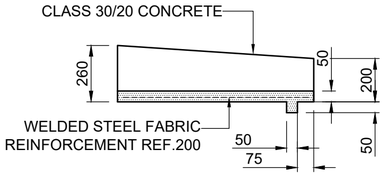

SECTION D-D

DETAILS OF PREFABRICATED CHUTE UNIT

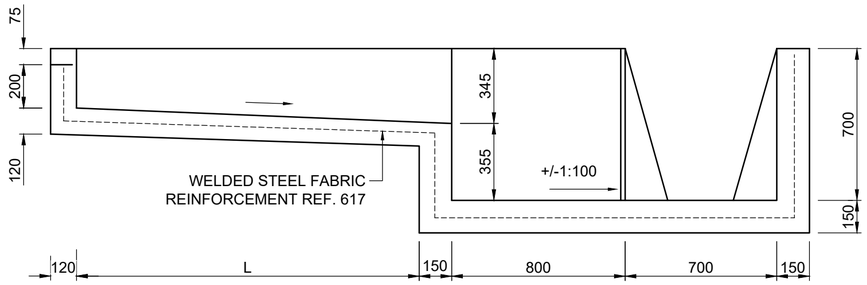

SECTION C-C

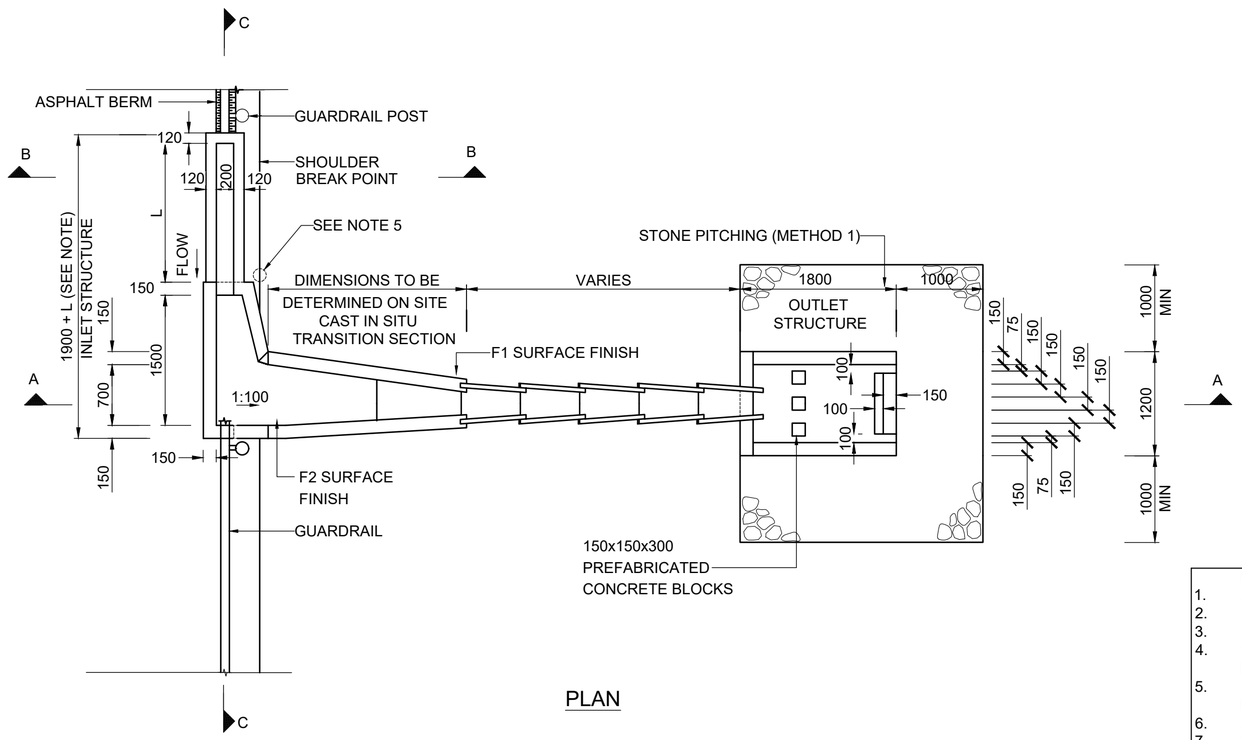

PLAN

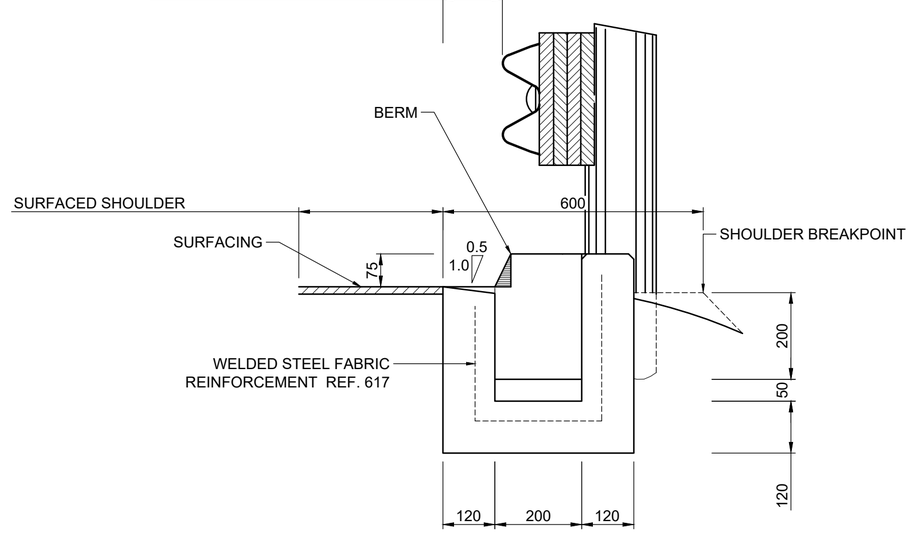

SECTION B-B

NOTES:

1. ALL EXPOSED SHARP EDGES TO HAVE 20 X 20mm CHAMFERS.
2. ALL CAST IN SITU CONCRETE TO BE CLASS 30/20 WITH MINIMUM COVER OF 50mm.
3. DOWN CHUTE TO BE LOCATED AT MIDPOINT OF INLET AT LOW POINTS ON ROAD.
4. REFER TO LONGITUDINAL ROAD SECTIONS FOR POSITIONS OF CHUTES. CHUTE POSITIONS MAY BE ADJUSTED TO SUIT GUARDRAIL POSTS.
5. WHERE 1,9m SPACING IS REQUIRED BETWEEN GUARDRAIL POSTS, ONE POST MUST BE MOVED BACK AS SHOWN AND THICKER SPACING BLOCKS MUST BE USED.
6. APPLICATION FOR FILLS LOWER THAN 5m.
7. L VARIES FROM 1,0m MINIMUM TO 3,5m DEPENDING ON THE REQUIRED INTERCEPTION CAPACITY.
8. REFER TO DRAWING NUMBER WCS/54/1/C2 FOR DETAIL OF ASPHALT BERM.

No.	DATE	ADDITIONS AND AMENDMENTS
0	OCT - 2023	ORIGINAL VERSION

STANDARD PLANS

WESTERN CAPE GOVERNMENT
DEPARTMENT OF INFRASTRUCTURE
TRANSPORT INFRASTRUCTURE BRANCH

CHUTES

PRECAST CONCRETE CHUTE FOR FILLS - DROP INLET

SCALE : N.T.S.

A2 ORIGINAL

INDEX NO.
WCS/23/2/C1

PLAN NO.
SHEET 1 OF 5

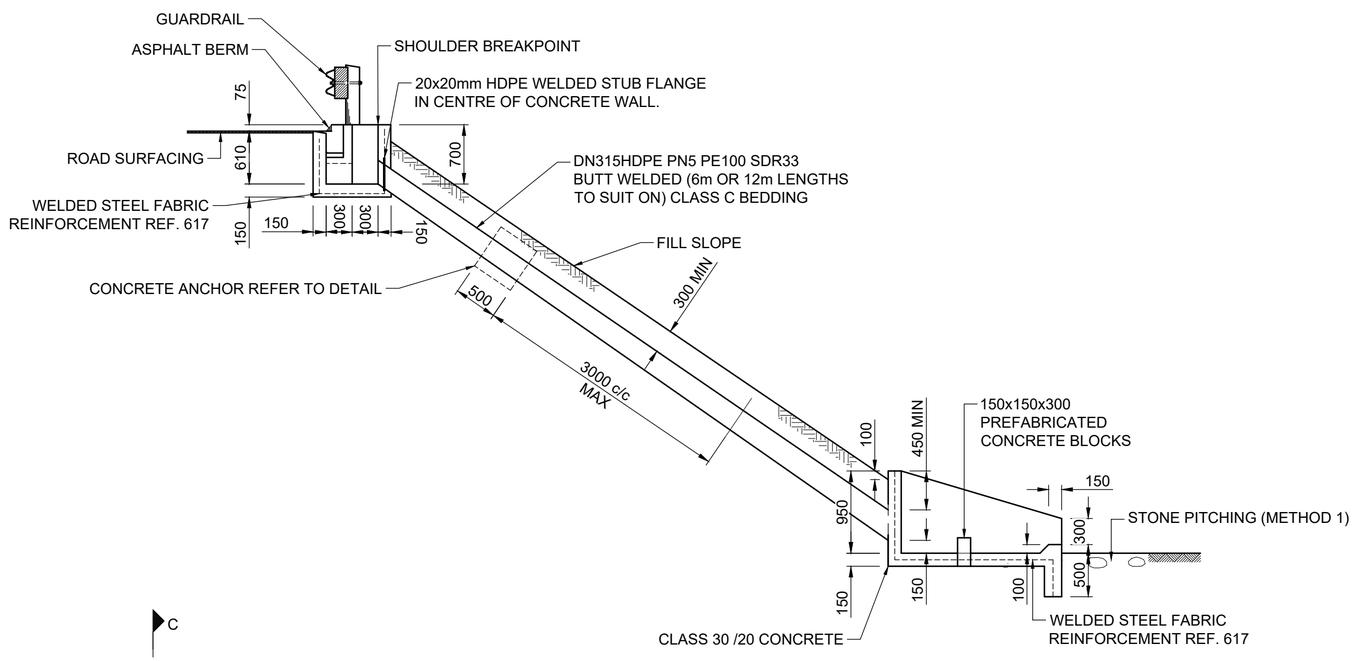

SECTION A-A
SCALE 1:50

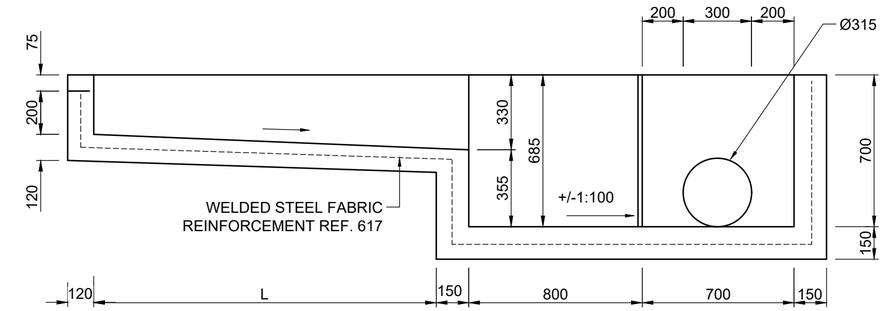

SECTION C-C
SCALE 1:20

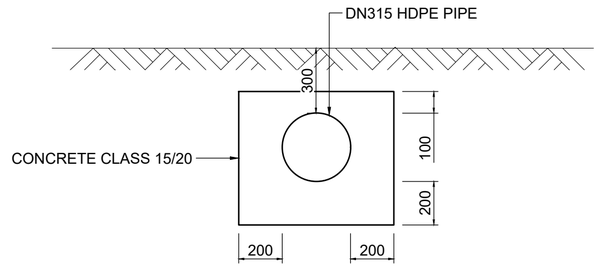

DETAIL OF ANCHOR
SCALE 1:20

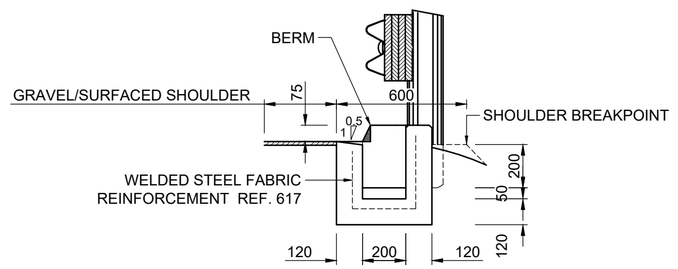

SECTION B-B
SCALE 1:20

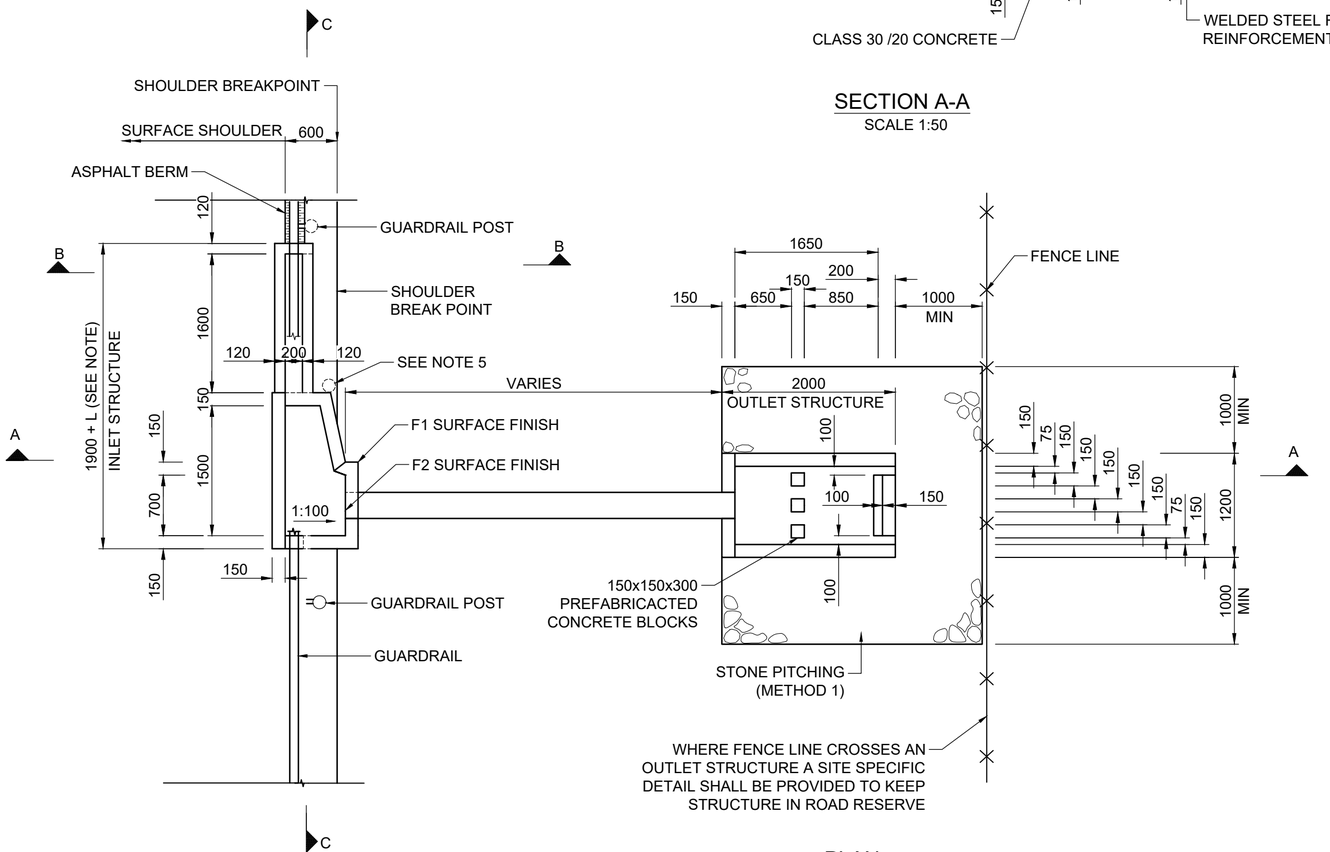

PLAN
SCALE 1:50

NOTES:

1. ALL EXPOSED SHARP EDGES TO HAVE 20 X 20mm CHAMFERS.
2. ALL CAST IN SITU CONCRETE TO BE CLASS 30/20 WITH MINIMUM COVER OF 50mm.
3. DOWN CHUTE TO BE LOCATED AT MIDPOINT OF INLET AT LOW POINTS ON ROAD
4. REFER TO LONGITUDINAL ROAD SECTIONS FOR POSITIONS OF CHUTES. CHUTE POSITIONS MAY BE ADJUSTED TO SUIT GUARDRAIL POSTS.
5. WHERE 1,9m SPACING IS REQUIRED BETWEEN GUARDRAIL POSTS, ONE POST MUST BE MOVED BACK AS SHOWN AND THICKER SPACING BLOCKS MUST BE USED.
6. APPLICATION FOR FILLS LOWER THAN 5m.
7. L VARIES FROM 1,0m MINIMUM TO 3,5m DEPENDING ON THE REQUIRED INTERCEPTION CAPACITY.
8. REFER TO DRAWING NUMBER WCS/54/1/C2 FOR DETAIL OF ASPHALT BERM.
9. PRIOR TO THE CONSTRUCTION OF THE DOWNPIPE INLET STRUCTURE AND INSTALLATION OF GUARDRAIL POSTS, THE POSITION OF THE POSTS AND INLET SHALL BE SET OUT ON SITE TO ENSURE THERE ARE NO CLASHES.

No.	DATE	ADDITIONS AND AMENDMENTS
0	OCT - 2023	ORIGINAL VERSION

STANDARD PLANS

WESTERN CAPE GOVERNMENT
DEPARTMENT OF INFRASTRUCTURE
TRANSPORT INFRASTRUCTURE BRANCH

CHUTES

DOWNPIPES FOR FILLS-DROP INLETS

SCALE : N.T.S.

A2 ORIGINAL

INDEX NO.
WCS/23/2/C2

PLAN NO.
SHEET 2 OF 5

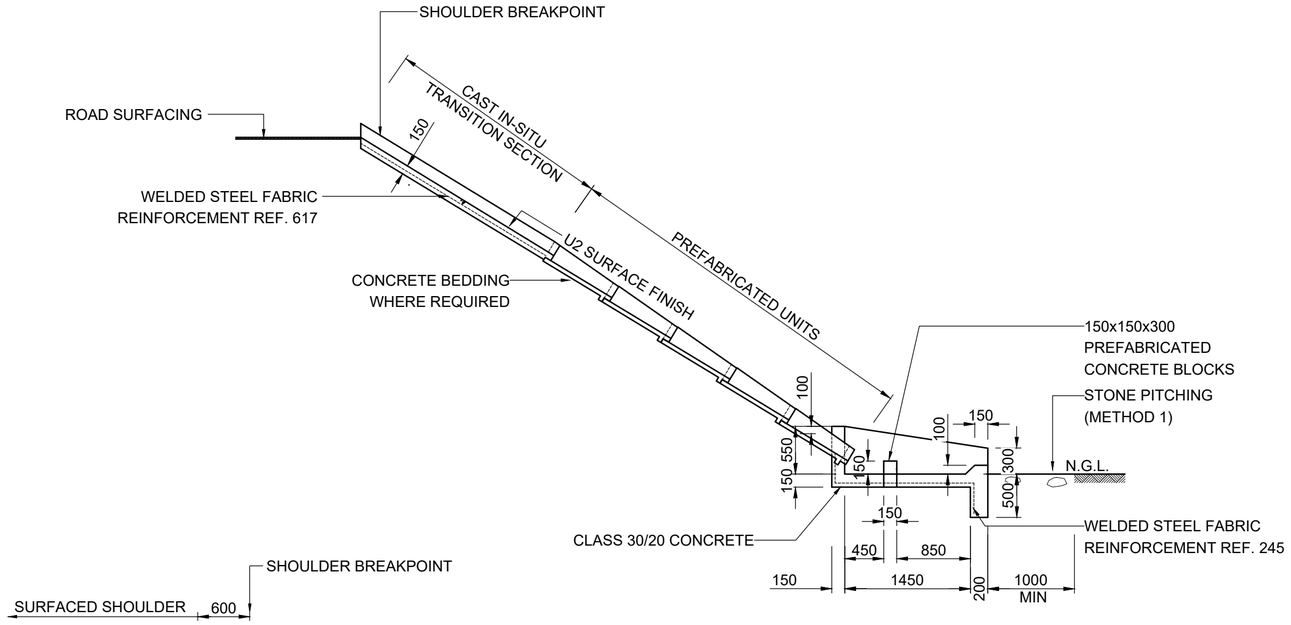

SECTION A-A
SCALE 1:50

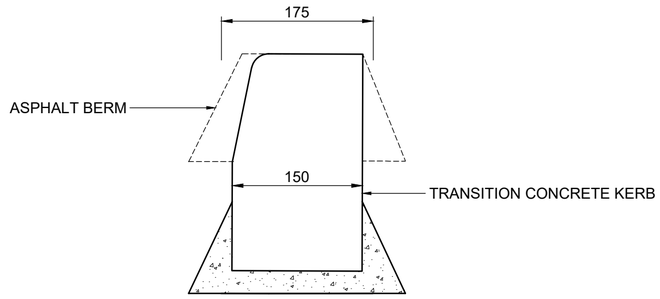

SECTION B-B
SCALE 1:5

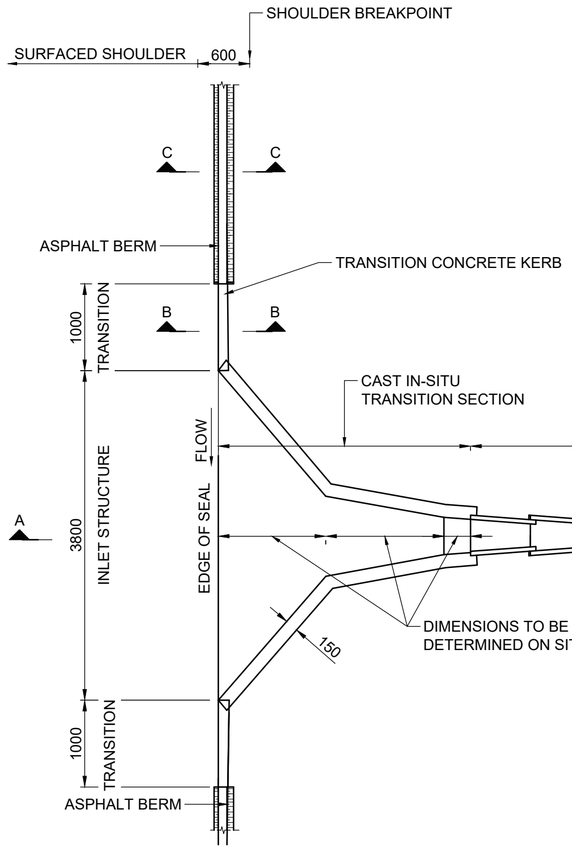

PLAN
SCALE 1:50

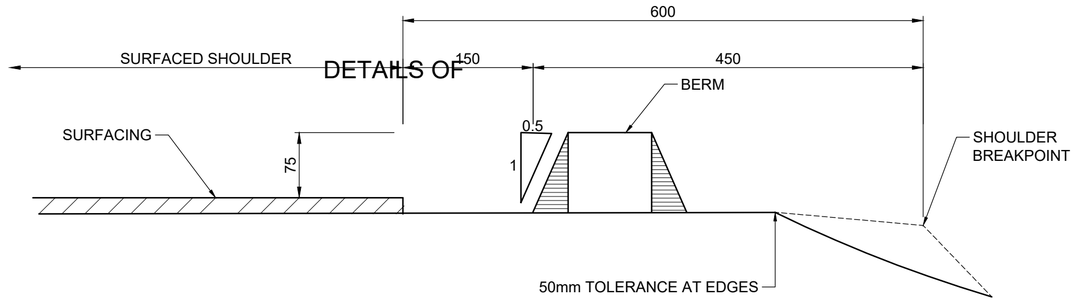

SECTION C-C
SCALE: 1:5

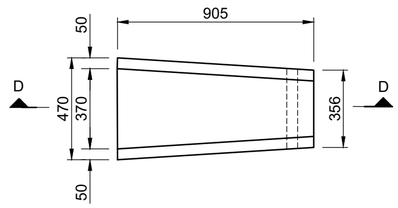

PLAN

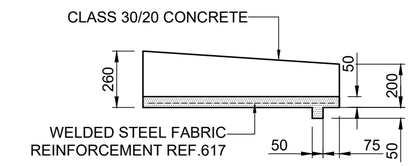

SECTION D-D

DETAILS OF PREFABRICATED CHUTE UNIT

NOTES :

1. ALL EXPOSED SHARP EDGES TO HAVE 20 X 20mm CHAMFERS.
2. ALL CAST IN SITU CONCRETE TO BE CLASS 30/20 WITH MINIMUM COVER OF 50mm.
3. DOWN CHUTE TO BE LOCATED AT MIDPOINT OF INLET AT LOW POINTS ON ROAD.
4. REFER TO LONGITUDINAL ROAD SECTIONS FOR POSITIONS OF CHUTES.
5. APPLICATION FOR FILLS LOWER THAN 5m.
6. REFER TO DRAWING NUMBER WCS/54/1/C2 FOR DETAIL OF ASPHALT BERM.

No.	DATE	ADDITIONS AND AMENDMENTS
0	OCT - 2023	ORIGINAL VERSION

STANDARD PLANS

WESTERN CAPE GOVERNMENT
DEPARTMENT OF INFRASTRUCTURE
TRANSPORT INFRASTRUCTURE BRANCH

CHUTES

DOWNPIPES FOR FILLS-DROP INLETS

SCALE : N.T.S.

A2 ORIGINAL

INDEX NO.
WCS/23/2/C3

PLAN NO.
SHEET 3 OF 5

TABLE 1		
SLOPE	L	Y
1:0,25	2,0	1,5
1:0,50	1,5	1,0
1:1,00	1,2	0,5
1:1,50	0,75	0,3

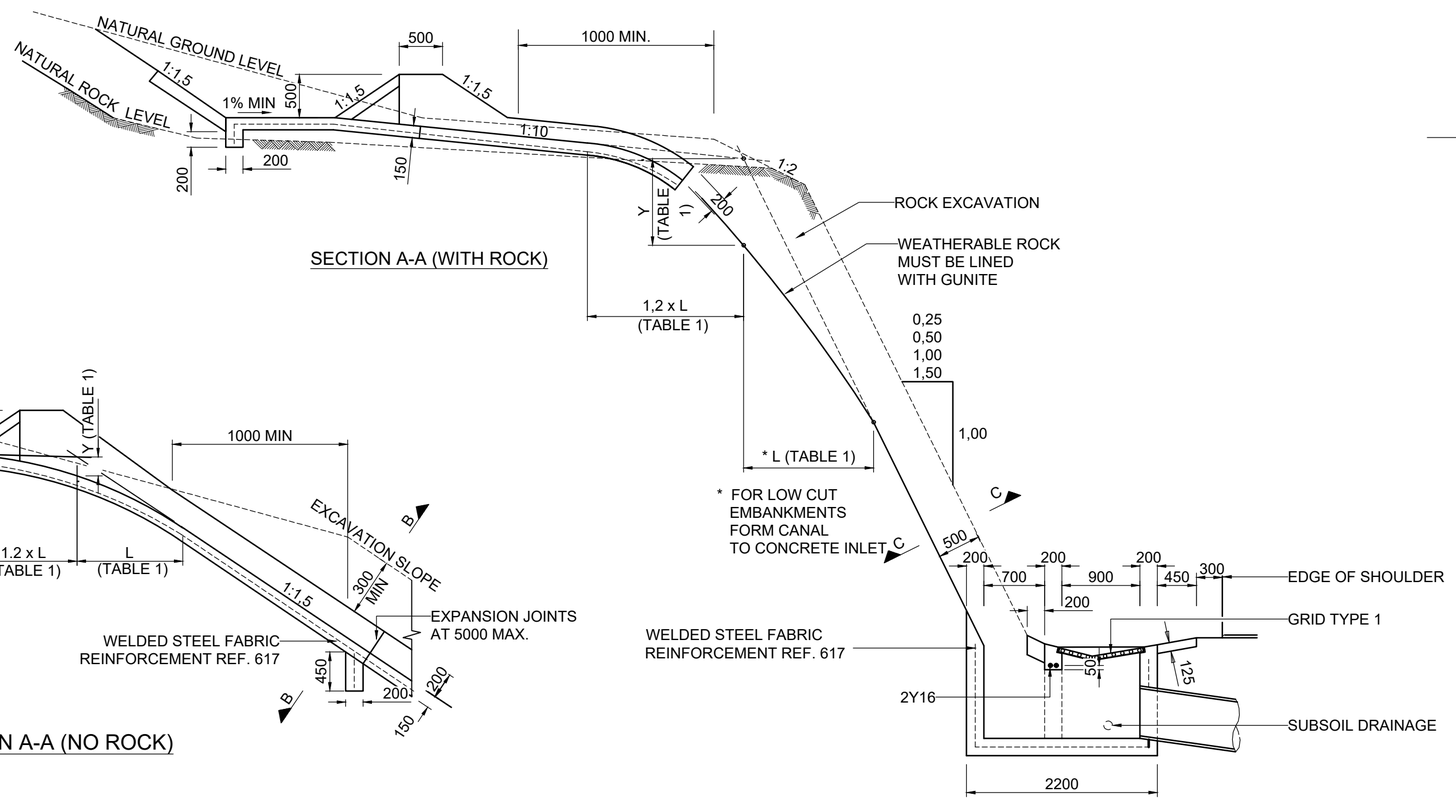

SECTION A-A (WITH ROCK)

PART SECTION A-A (NO ROCK)

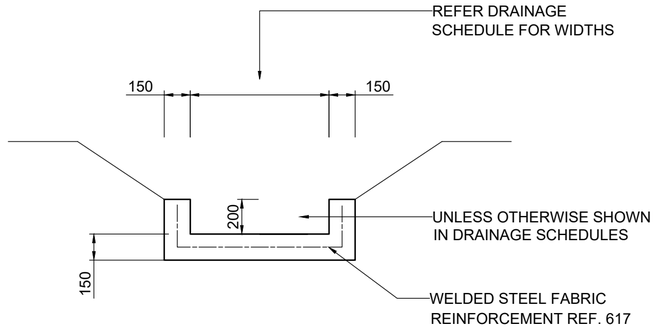

SECTION B-B

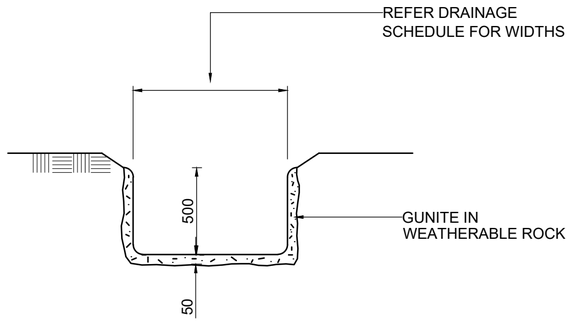

SECTION C-C

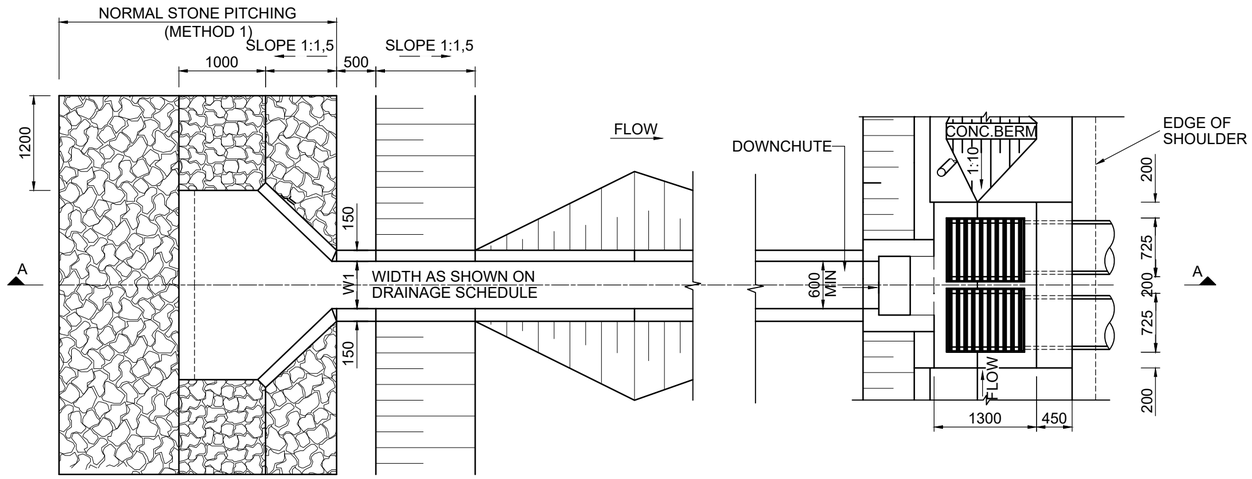

PLAN

TYPICAL DETAILS OF DOWNCHUTE INLET AT CATCHWATER BANKS

NOTES :

1. ALL EXPOSED SHARP EDGES TO HAVE 20 X 20mm CHAMFERS.
2. ALL IN-SUTU CONCRETE TO BE CLASS 30/20 WITH MINIMUM COVER OF 50mm.
3. CONCRETE DOWNCHUTES TO BE POSITIONED AT ALL LOW POINTS ALONG THE CATCHWATER BANKS.
4. FOR POSITIONS OF CONCRETE DOWNCHUTES,SEE DRAINAGE SHEDULES AND LAYOUT DRAWINGS.
5. REFER TO DWG. No. WCS/23/3/C1 FOR DETAIL OF CONCRETE SIDE DRAINS.
6. IF THE DRAINAGE STRUCTURE UNDERNEATH THE ROAD CONSISTS OF MORE THAN ONE CULVERT,THE STRUCTURE TO BE BUILT SYMMETRICALLY AROUND DOWNCHUTE.

No.	DATE	ADDITIONS AND AMENDMENTS
0	OCT - 2023	ORIGINAL VERSION

STANDARD PLANS

WESTERN CAPE GOVERNMENT
DEPARTMENT OF INFRASTRUCTURE
TRANSPORT INFRASTRUCTURE BRANCH

CHUTES

DOWNCHUTE INLET AT CATCHWATER BANKS

SCALE : N.T.S.

A2 ORIGINAL

INDEX NO. WCS/23/2/C4

PLAN NO. SHEET 4 OF 5

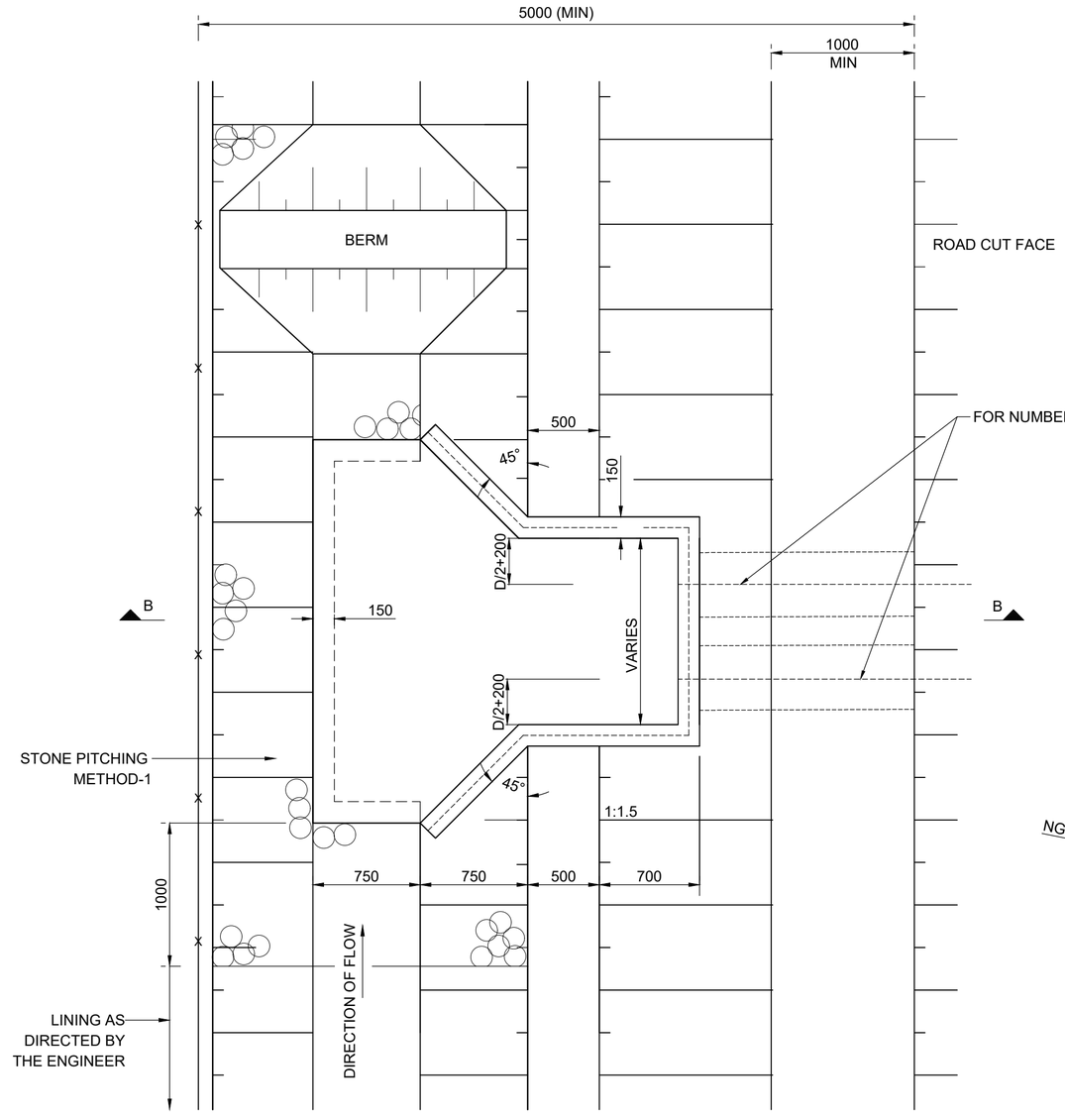

PLAN

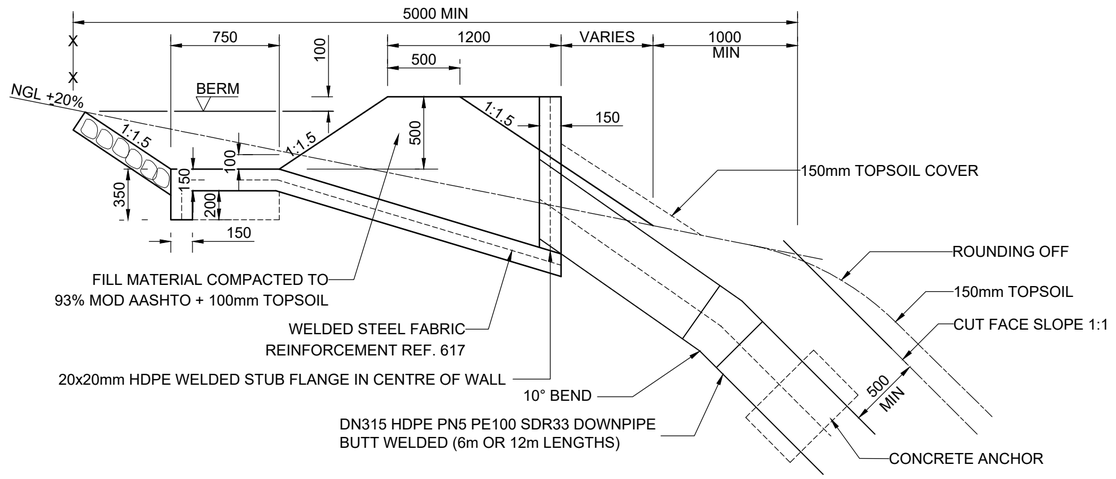

SECTION B-B WITH 1:1 CUT SLOPE

NOTES :

1. ALL EXPOSED SHARP EDGES TO HAVE 20 X 20mm CHAMFERS.
2. ALL IN-SITU CONCRETE TO BE CLASS 30/20 WITH MINIMUM COVER OF 50mm.
3. CONCRETE DOWNPIPES TO BE POSITIONED AT ALL LOW POINTS ALONG THE CATCHWATER BANKS.
4. FOR POSITIONS OF CONCRETE DOWNPIPES, SEE DRAINAGE SHEDULES AND LAYOUT DRAWINGS.
5. REFER TO DWG. No. WCS/23/3/C1 FOR DETAIL OF CONCRETE SIDE DRAINS.
6. IF THE DRAINAGE STRUCTURE UNDERNEATH THE ROAD CONSISTS OF MORE THAN ONE CULVERT,THE STRUCTURE TO BE BUILT SYMMETRICALLY AROUND DOWNPIPES.

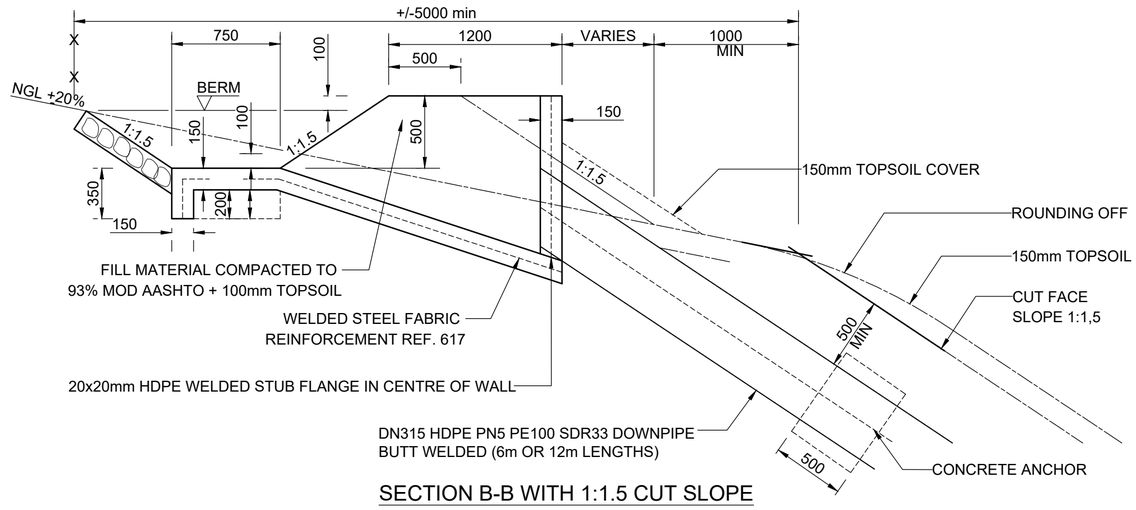

SECTION B-B WITH 1:1.5 CUT SLOPE

DETAILS OF INLET STRUCTURE AND DOWNPIPES AT CATCHWATER BANKS

No.	DATE	ADDITIONS AND AMENDMENTS
0	OCT - 2023	ORIGINAL VERSION

STANDARD PLANS

WESTERN CAPE GOVERNMENT
DEPARTMENT OF INFRASTRUCTURE
TRANSPORT INFRASTRUCTURE BRANCH

CHUTES

DOWNPIPE INLET AT CATCHWATER BANKS

SCALE : N.T.S.

A2 ORIGINAL

INDEX NO.
WCS/23/2/C5

PLAN NO.
SHEET 5 OF 5

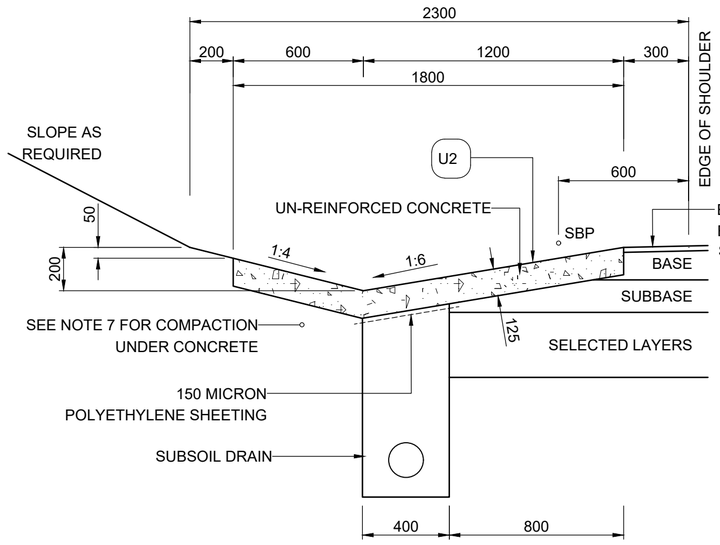

CONCRETE SIDE DRAIN

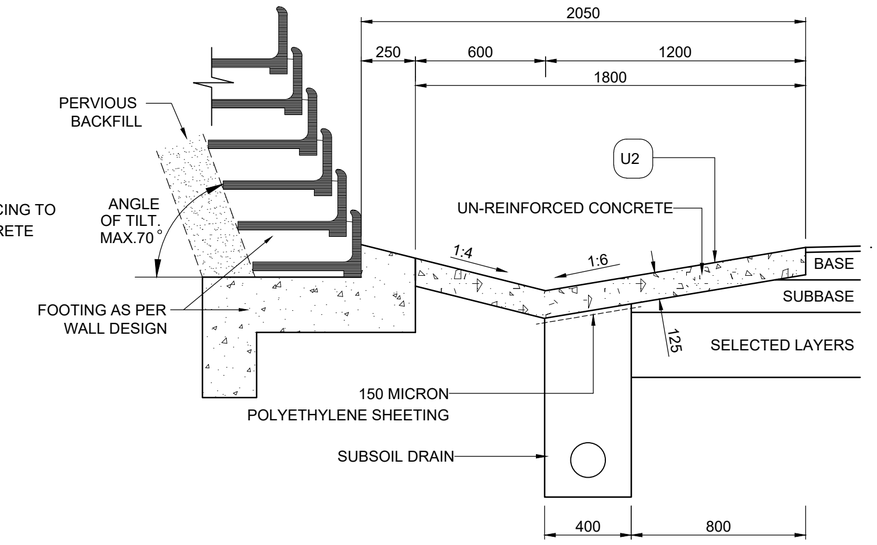

NOTES :

1. CONCRETE CLASS 30/20
2. SURFACE FINISH - U2
3. SUBSOIL DRAIN IS COMPULSORY WITH CONCRETE SIDE DRAIN.
4. SUBSOIL DRAIN PIPE TO BE INSTALLED BEFORE ROAD LAYERS ARE COMPLETED. SUBSOIL DRAIN SHALL THEN BE COMPLETED AFTER COMPLETION OF ROAD LAYERS.
5. CONSTRUCTION JOINTS AT 2.5m INTERVALS AND EXPANSION JOINTS AT 10m INTERVALS IN THE LONGITUDINAL DIRECTION. PANELS TO BE CAST ALTERNATIVELY.
6. COLD JOINTS SHALL BE PAINTED WITH A BITUMEN EMULSION CONTAINING 60% PURE BITUMEN BY MASS.
7. IN SITU MATERIAL SHALL BE COMPACTED TO 93% MDD FOR GRANULAR MATERIALS
8. 150 MICRON POLYETHYLENE SHEETING SHALL BE PLACED AS A WORKING SURFACE FOR SIDE DRAIN IN SANDY MATERIAL.
9. REFER TO DWG.No.WCS/21/3/C2 FOR DETAIL OF SUBSOIL DRAIN.
10. SBP = SHOULDER BREAKPOINT

CONCRETE SIDE DRAIN WITH TYPICAL RETAINING STRUCTURE

CONCRETE SIDE DRAIN WITH STORMWATER PIPE IN LONGITUDINAL DIRECTION

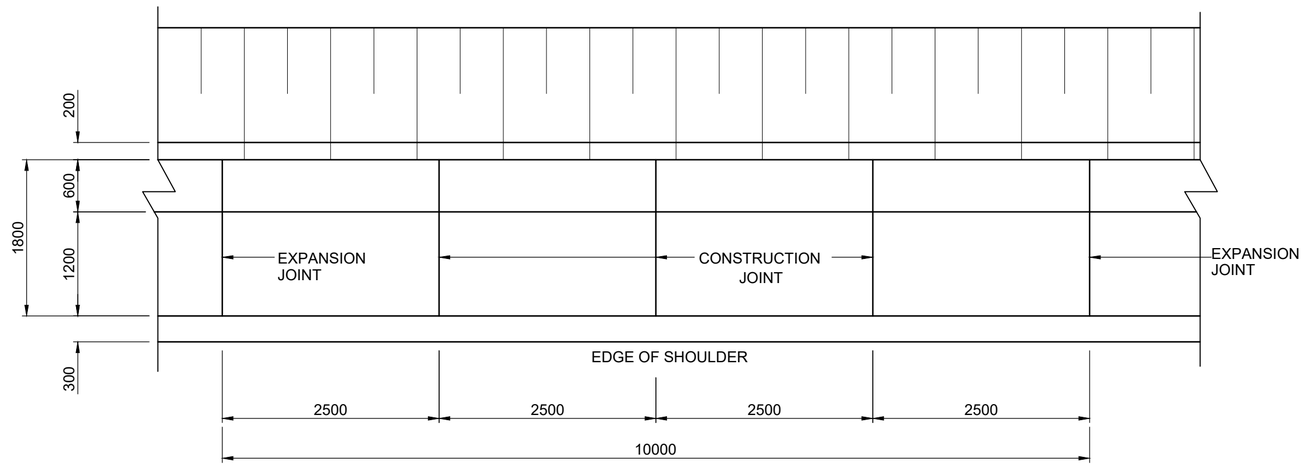

PLAN OF CONCRETE SIDE DRAIN

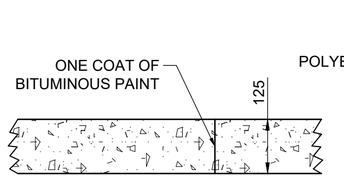

CONSTRUCTION JOINT DETAIL
2,5m INTERVALS

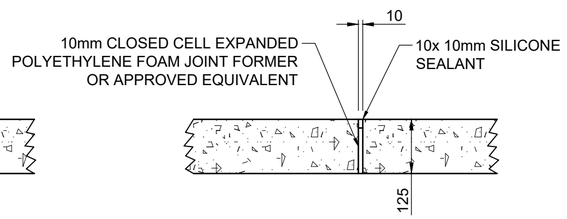

EXPANSION JOINT DETAIL
10m INTERVALS

No.	DATE	ADDITIONS AND AMENDMENTS
0	OCT - 2023	ORIGINAL VERSION

STANDARD PLANS

WESTERN CAPE GOVERNMENT
DEPARTMENT OF INFRASTRUCTURE
TRANSPORT INFRASTRUCTURE BRANCH

SIDE DRAIN

CONCRETE SIDE DRAIN

SCALE : N.T.S.

A2 ORIGINAL

INDEX NO.
WCS/23/3/C1

PLAN NO.
SHEET 1 OF 15

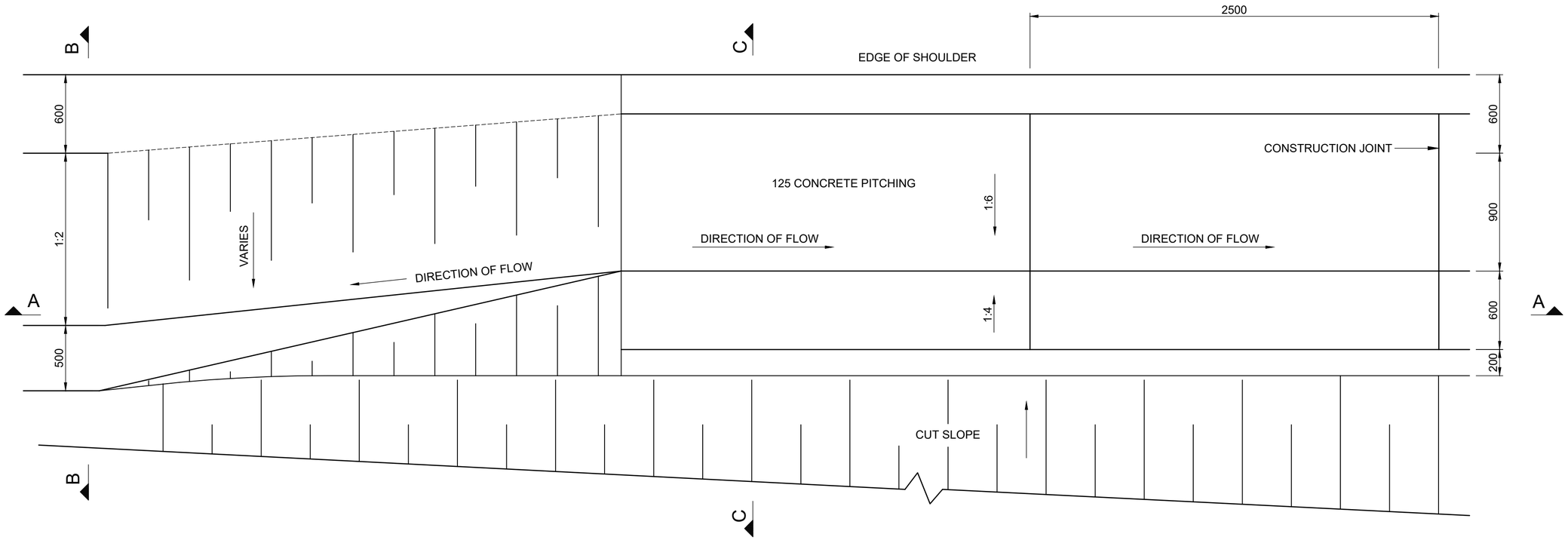

PLAN

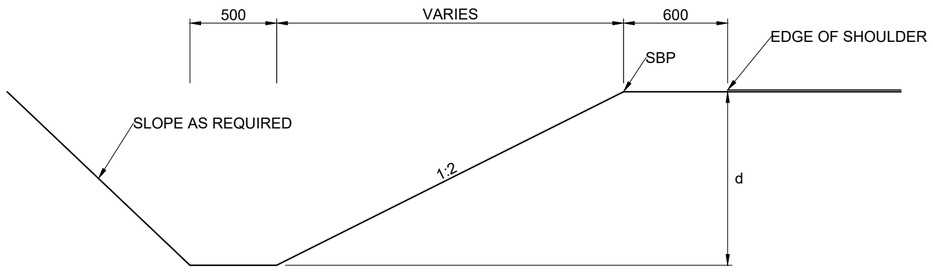

SECTION B-B (EARTH DRAIN)

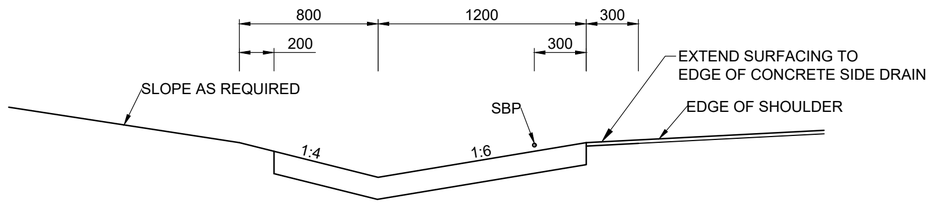

SECTION C-C

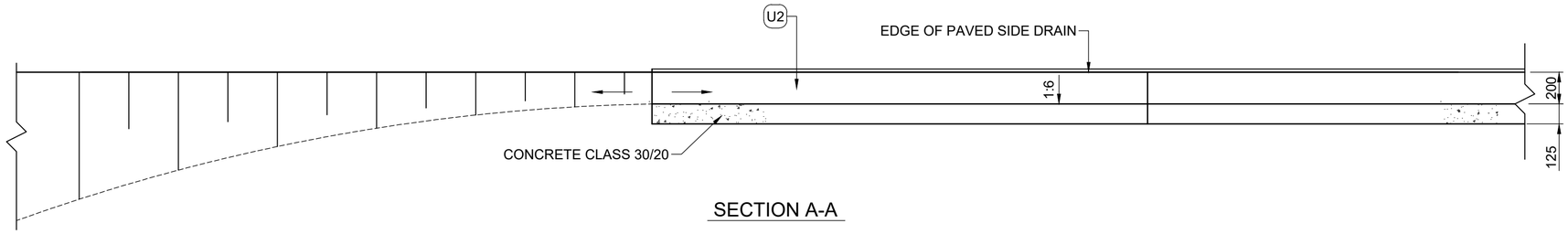

SECTION A-A

NOTE :

THIS DRAWING IS READ IN CONJUNCTION WITH DWG. No. WCS/23/3/C1

No.	DATE	ADDITIONS AND AMENDMENTS
0	OCT - 2023	ORIGINAL VERSION

STANDARD PLANS

WESTERN CAPE GOVERNMENT
DEPARTMENT OF INFRASTRUCTURE
TRANSPORT INFRASTRUCTURE BRANCH

SIDE DRAIN

START OF CONCRETE SIDE DRAIN IN CUTTINGS

SCALE : N.T.S.

A2 ORIGINAL

INDEX NO.
WCS/23/3/C2

PLAN NO.
SHEET 2 OF 15

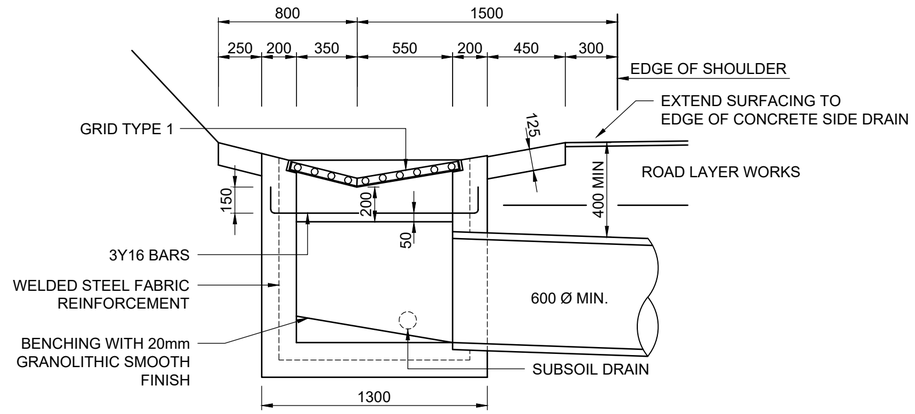

SECTION A-A

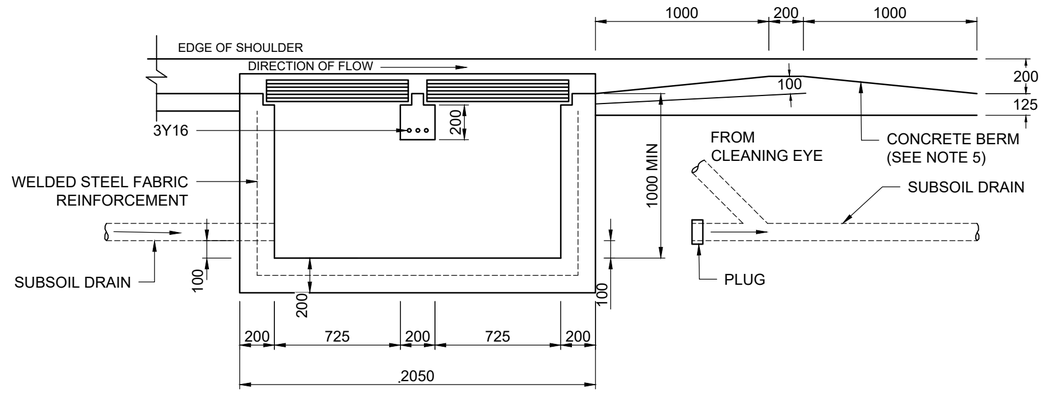

SECTION B-B

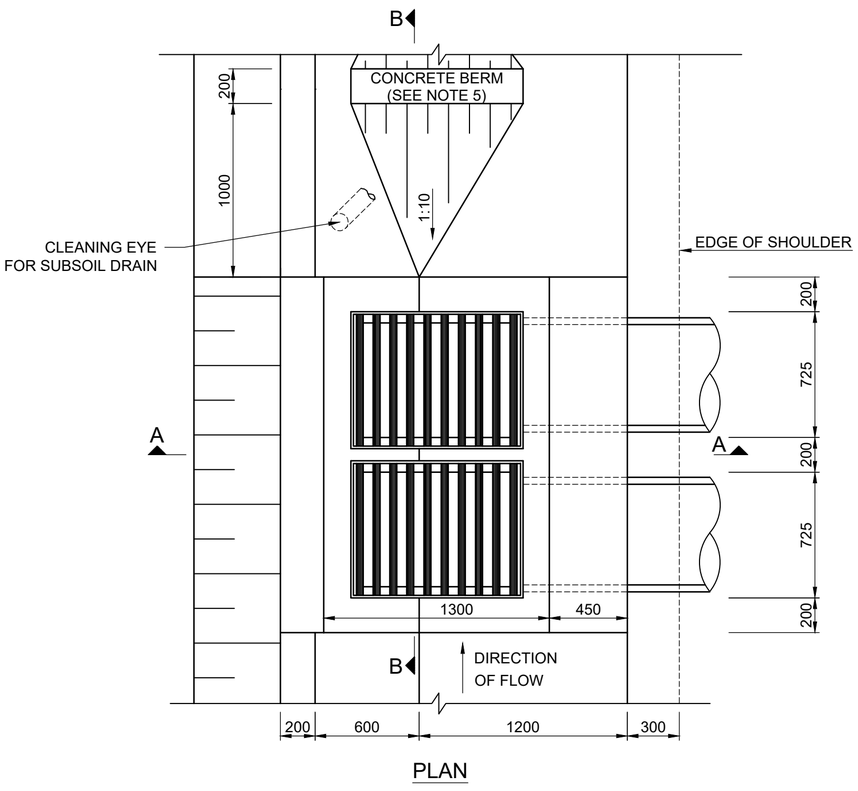

PLAN

NOTES :

1. CONCRETE CLASS 30/20.
2. FINISH - VISIBLE F2
   HIDDEN F1
3. REINFORCEMENT - WELDED STEEL FABRIC REF. 617. PAYMENT ITEM 23.05 SHALL INCLUDE COMPENSATION FOR REINFORCEMENT.
4. DEPTH OF INLET MUST BE ADJUSTED TO SUIT SUBSOIL DRAIN DEPTH.
5. CONCRETE BERM ONLY REQUIRED FOR SIDE DRAIN SLOPE > 3%.
6. FOR DETAIL OF CLEANING EYE OF SUBSOIL DRAIN REFER TO DWG. No. WCS/21/3/C3.
7. THIS DRAWING IS TO BE READ IN CONJUNCTION WITH DWG. No. WCS/23/3/C1

No.	DATE	ADDITIONS AND AMENDMENTS
0	OCT - 2023	ORIGINAL VERSION

STANDARD PLANS

WESTERN CAPE GOVERNMENT
DEPARTMENT OF INFRASTRUCTURE
TRANSPORT INFRASTRUCTURE BRANCH

SIDE DRAIN

TYPICAL GRID INLET IN CONCRETE SIDE DRAIN

SCALE : N.T.S.

A2 ORIGINAL

INDEX NO.
WCS/23/3/C3

PLAN NO.
SHEET 3 OF 15

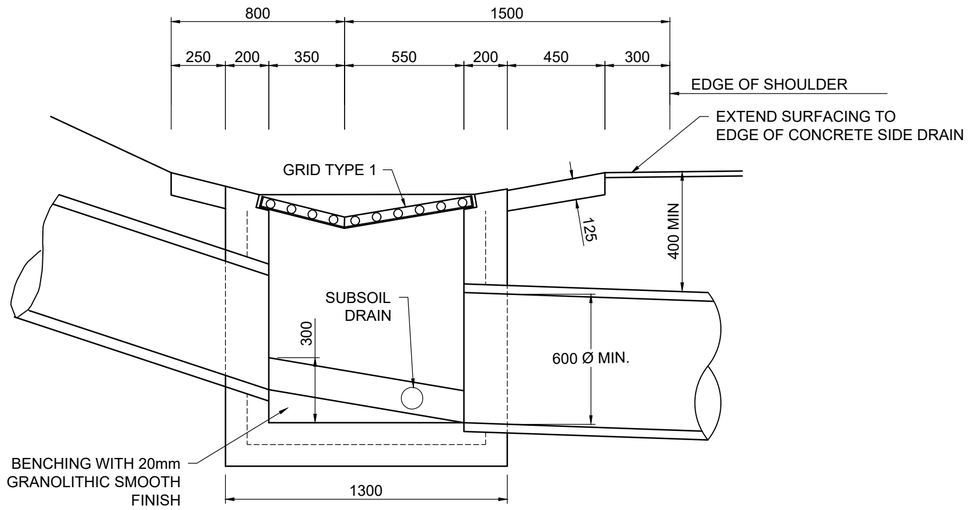

SECTION A-A

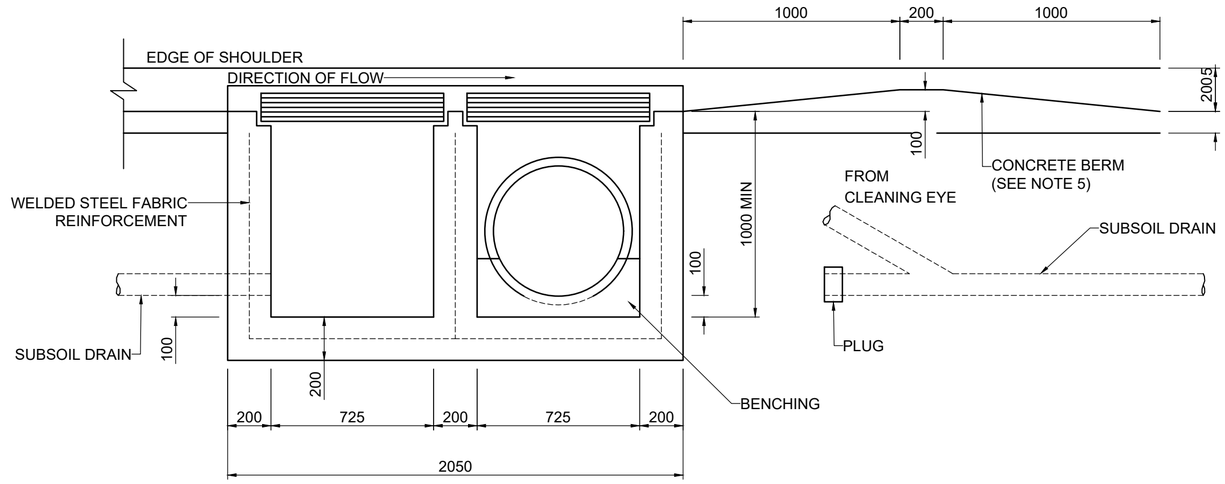

SECTION B-B

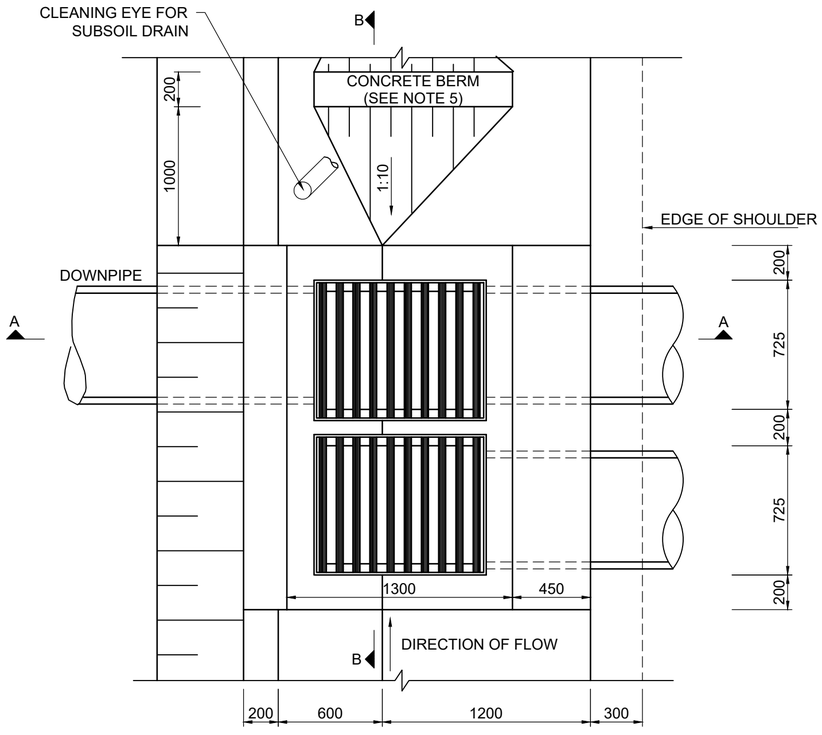

PLAN

NOTES :

1. CONCRETE CLASS 30/20.
2. FINISH - VISIBLE F2
   HIDDEN F1
3. REINFORCEMENT - WELDED STEEL FABRIC REF. 617. PAYMENT ITEM 23.05 SHALL INCLUDE COMPENSATION FOR REINFORCEMENT.
4. DEPTH OF INLET MUST BE ADJUSTED TO SUIT SUBSOIL DRAIN DEPTH.
5. CONCRETE BERM ONLY REQUIRED FOR SIDE DRAIN SLOPE > 3%.
6. FOR DETAIL OF CLEANING EYE OF SUBSOIL DRAIN REFER TO DWG. No. WCS/21/3/C3.
7. THIS DRAWING IS TO BE READ IN CONJUNCTION WITH DWG. No. WCS/23/3/C1

No.	DATE	ADDITIONS AND AMENDMENTS
0	OCT - 2023	ORIGINAL VERSION

STANDARD PLANS

WESTERN CAPE GOVERNMENT
DEPARTMENT OF INFRASTRUCTURE
TRANSPORT INFRASTRUCTURE BRANCH

SIDE DRAIN

TYPICAL GRID INLET WITH DOWNPIPE

SCALE : N.T.S.

A2 ORIGINAL

INDEX NO.
WCS/23/3/C4

PLAN NO.
SHEET 4 OF 15

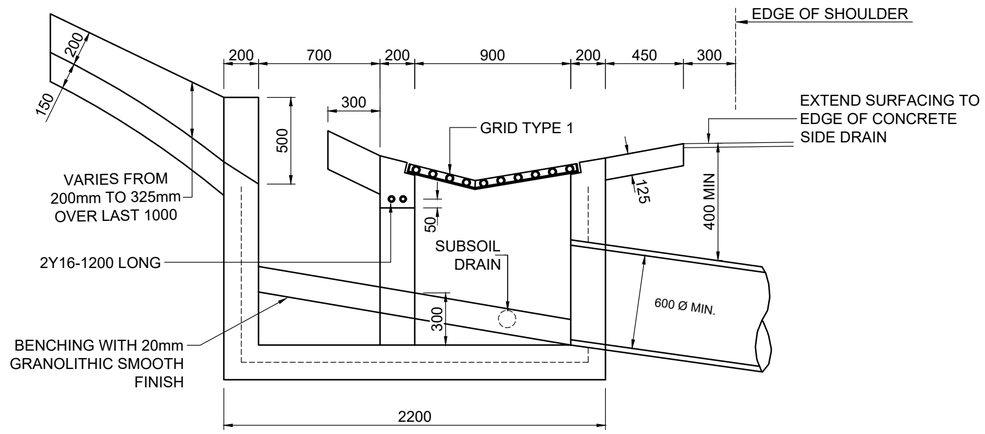

SECTION A-A

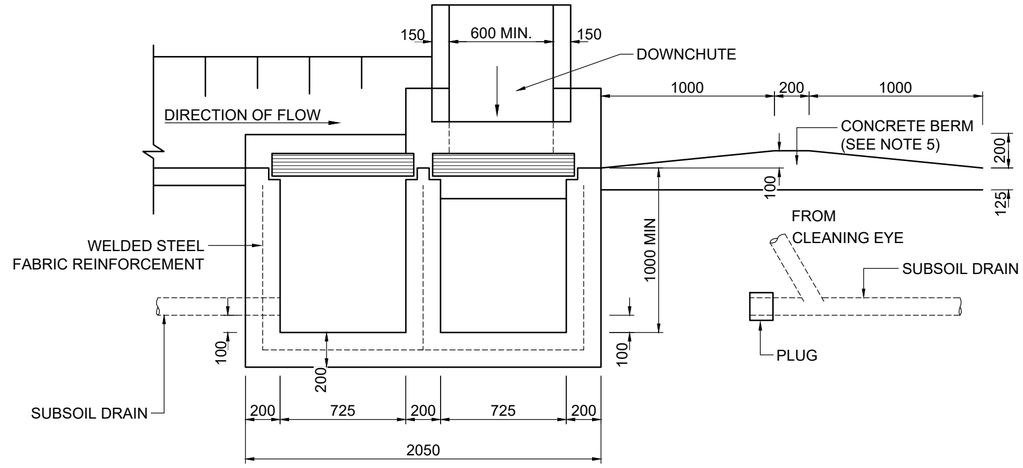

SECTION B-B

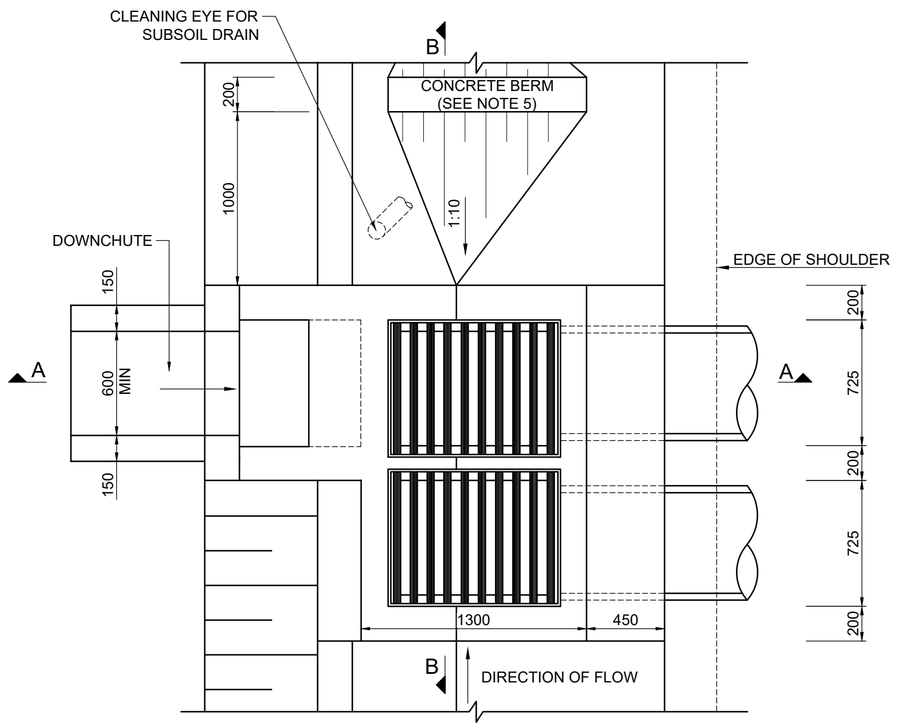

PLAN

NOTES :

1. CONCRETE CLASS 30/20.
2. FINISH - VISIBLE F2
   HIDDEN F1
3. REINFORCEMENT - WELDED STEEL FABRIC REF. 617.
   PAYMENT ITEM 23.05 SHALL INCLUDE COMPENSATION FOR REINFORCEMENT.
4. DEPTH OF INLET MUST BE ADJUSTED TO SUIT SUBSOIL DRAIN DEPTH.
5. CONCRETE BERM ONLY REQUIRED FOR SIDE DRAIN SLOPE > 3%.
6. FOR DETAIL OF CLEANING EYE OF SUBSOIL DRAIN REFER TO DWG. No. WCS/21/3/C3.
7. THIS DRAWING IS TO BE READ IN CONJUNCTION WITH DWG. No. WCS/23/3/C1

No.	DATE	ADDITIONS AND AMENDMENTS
0	OCT - 2023	ORIGINAL VERSION

STANDARD PLANS

WESTERN CAPE GOVERNMENT
DEPARTMENT OF INFRASTRUCTURE
TRANSPORT INFRASTRUCTURE BRANCH

SIDE DRAIN

TYPICAL GRID INLET WITH DOWNCHUTE

SCALE : N.T.S.

A2 ORIGINAL

INDEX NO.
WCS/23/3/C5

PLAN NO.
SHEET 5 OF 15

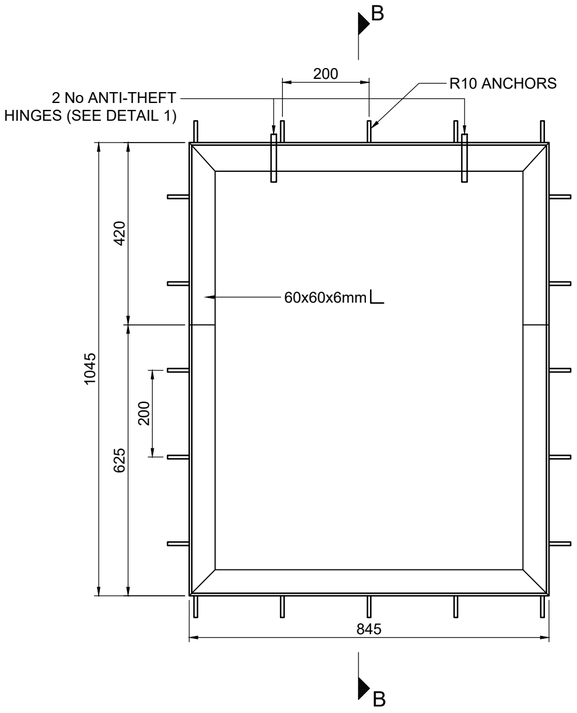

GRID FRAME

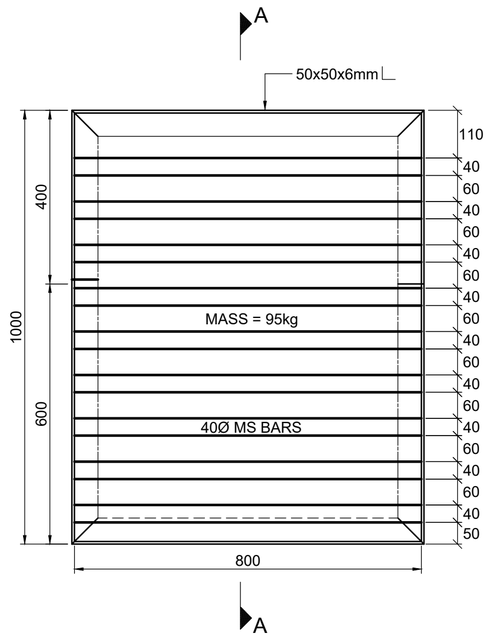

GRID PLAN

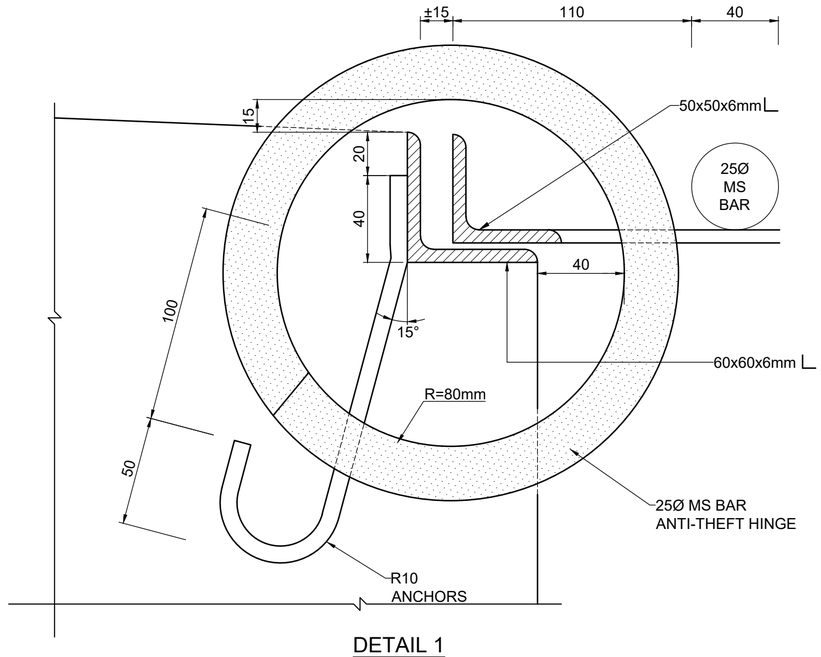

DETAIL 1

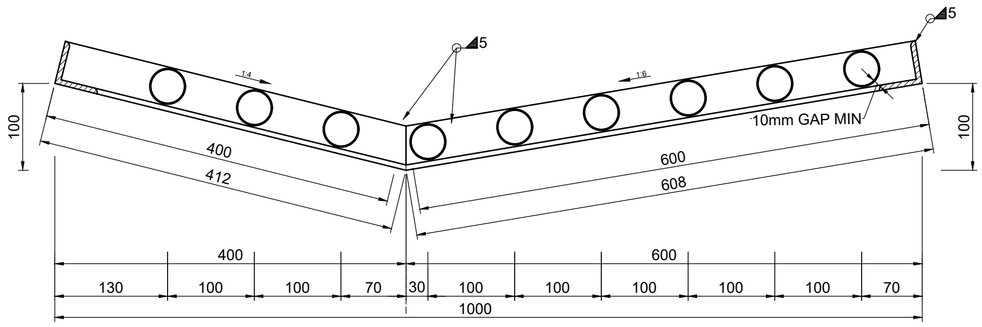

SECTION A-A

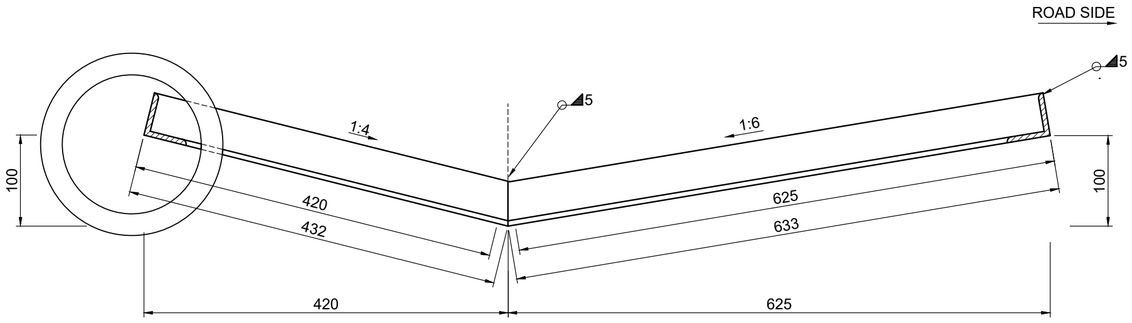

SECTION B-B

NOTES :

1. ALL STEEL AND WELDING TO COMPLY WITH SECTION 6700 OF COLTO STANDARD SPECIFICATIONS FOR ROAD AND BRIDGE WORKS.
2. GRID AND FRAME SHALL BE HOT-DIP GALVANIZED WITH AN 85 MICRON COATING IN ACCORDANCE WITH SANS 121.
3. PAYMENT INCLUDED IN ITEM 23.05.

No.	DATE	ADDITIONS AND AMENDMENTS
0	OCT - 2023	ORIGINAL VERSION

STANDARD PLANS

WESTERN CAPE GOVERNMENT
DEPARTMENT OF INFRASTRUCTURE
TRANSPORT INFRASTRUCTURE BRANCH

SIDE DRAIN

GRID DETAIL TYPE 1

SCALE : N.T.S.

A2 ORIGINAL

INDEX NO.
WCS/23/3/C6

PLAN NO.
SHEET 6 OF 15

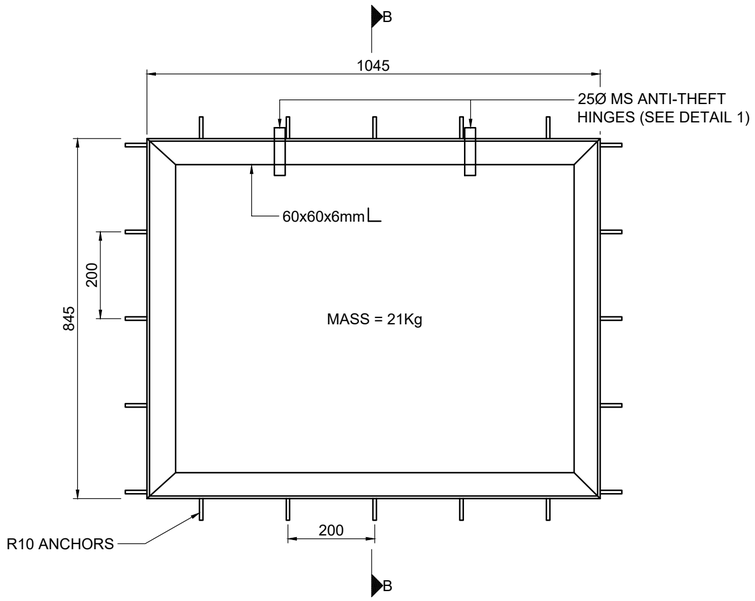

GRID FRAME

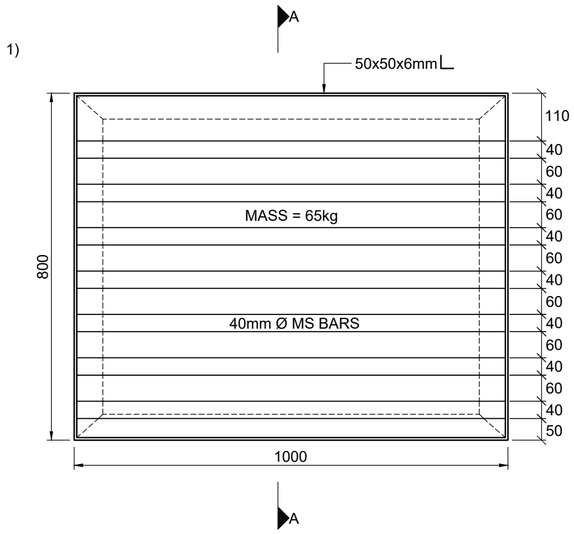

GRID PLAN

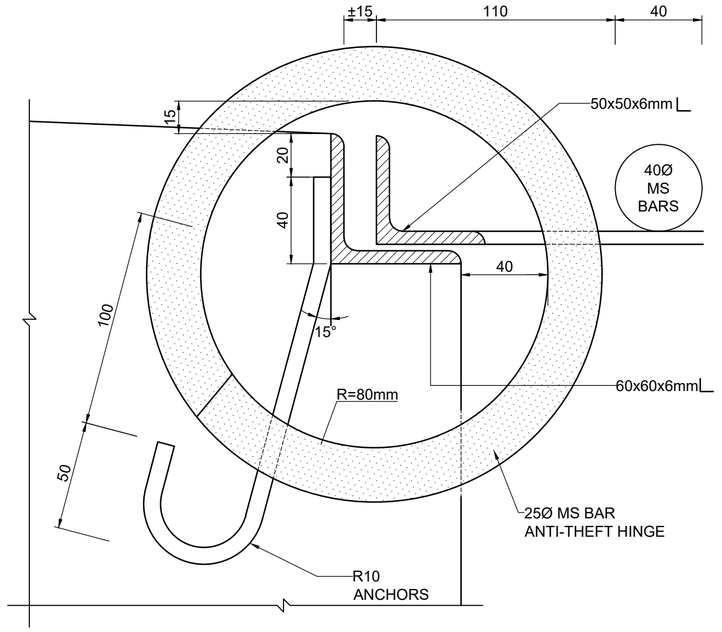

DETAIL 1

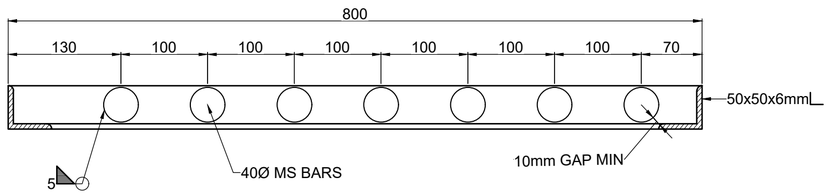

SECTION A-A
SCALE 1:5

NOTES :

1. ALL STEEL AND WELDING TO COMPLY WITH SECTION 6700 OF COLTO STANDARD SPECIFICATIONS FOR ROAD AND BRIDGE WORKS.
2. GRID AND FRAME SHALL BE HOT-DIP GALVANIZED WITH AN 85 MICRON COATING IN ACCORDANCE WITH SANS 121.
3. PAYMENT INCLUDED IN ITEM 23.05.

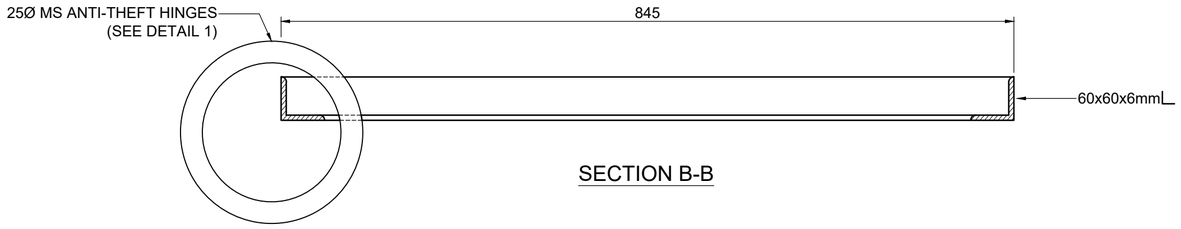

SECTION B-B

No.	DATE	ADDITIONS AND AMENDMENTS
0	OCT - 2023	ORIGINAL VERSION

STANDARD PLANS

WESTERN CAPE GOVERNMENT
DEPARTMENT OF INFRASTRUCTURE
TRANSPORT INFRASTRUCTURE BRANCH

SIDE DRAIN

GRID DETAIL TYPE 2

SCALE : N.T.S.

A2 ORIGINAL

INDEX NO.
WCS/23/3/C7

PLAN NO.
SHEET 7 OF 15

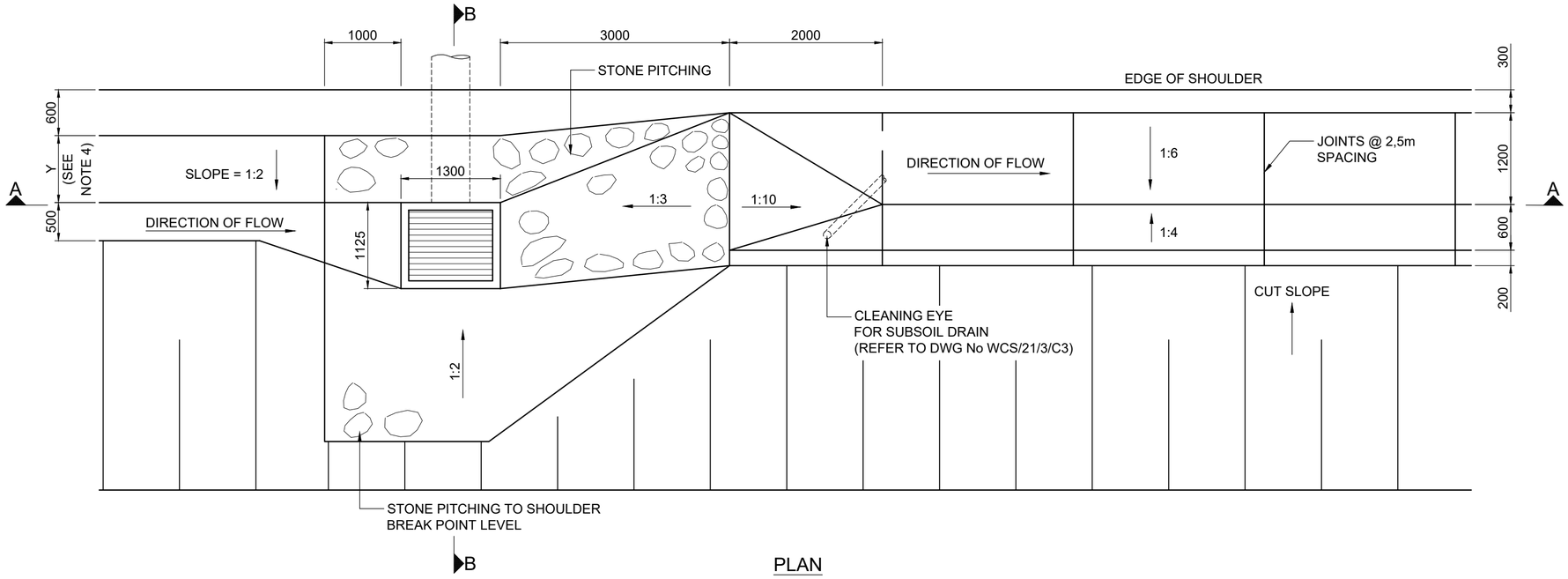

PLAN

NOTES :

1. CONCRETE CLASS 30/20.
2. FINISH - VISIBLE F2
   HIDDEN F1
3. REINFORCEMENT-WELDED STEEL FABRIC REF. 617. PAYMENT ITEM 23.05 SHALL INCLUDE COMPENSATION FOR REINFORCEMENT.
4. Y DEPENDS ON THE APPROVED DEPTH OF DRAIN.
5. THIS DRAWING IS TO BE READ IN CONJUNCTION WITH DWG. No. WSC/23/3/C1.

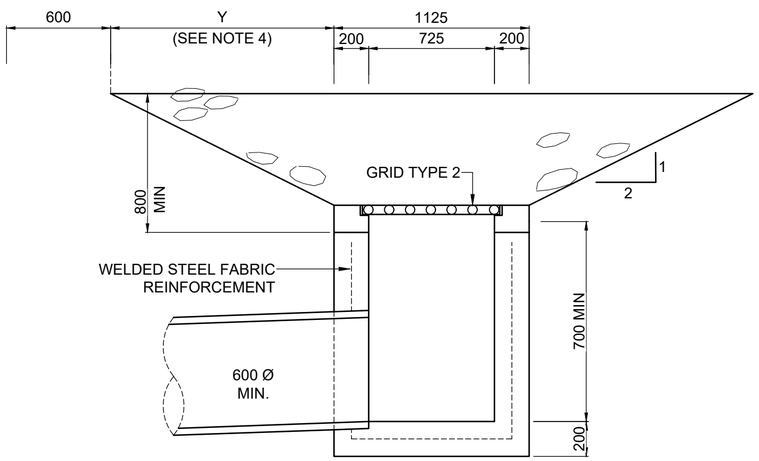

SECTION B-B

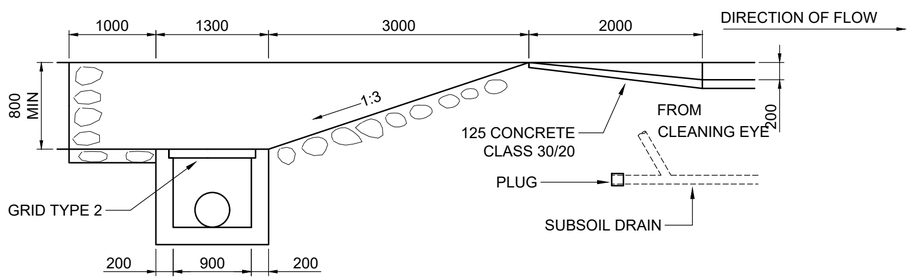

SECTION A-A

No.	DATE	ADDITIONS AND AMENDMENTS
0	OCT - 2023	ORIGINAL VERSION

STANDARD PLANS

WESTERN CAPE GOVERNMENT
DEPARTMENT OF INFRASTRUCTURE
TRANSPORT INFRASTRUCTURE BRANCH

SIDE DRAIN

TRANSITION FROM UNLINED SIDE DRAIN
TO CONCRETE SIDE DRAIN

SCALE : N.T.S.

A2 ORIGINAL

INDEX NO.
WCS/23/3/C8

PLAN NO.
SHEET 8 OF 15

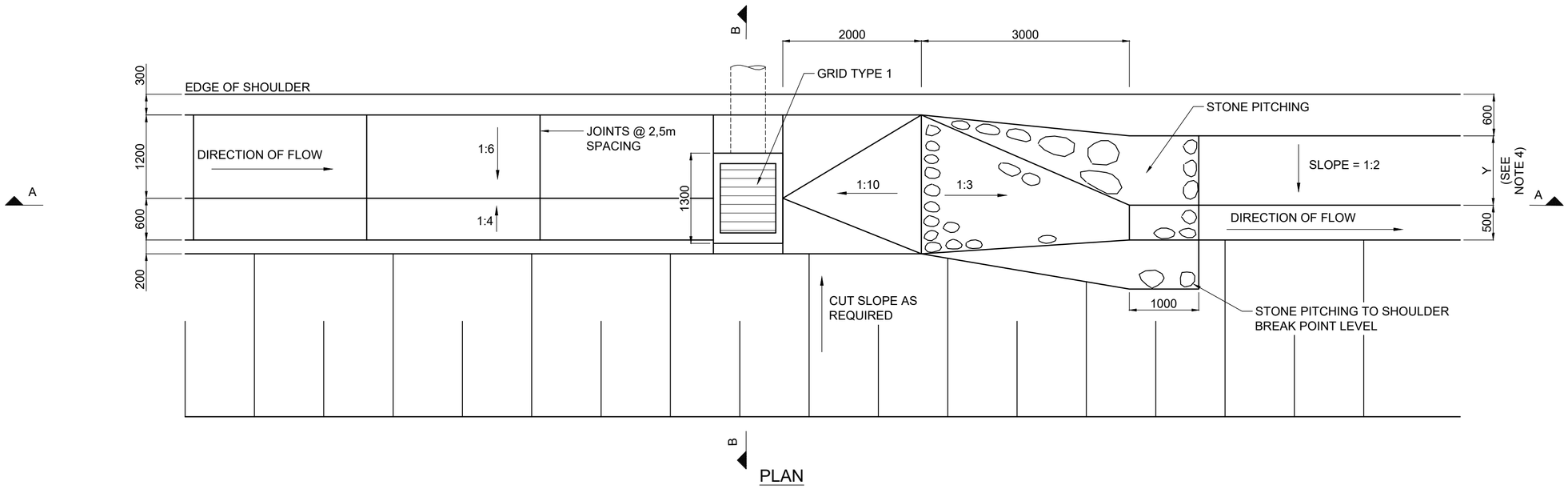

PLAN

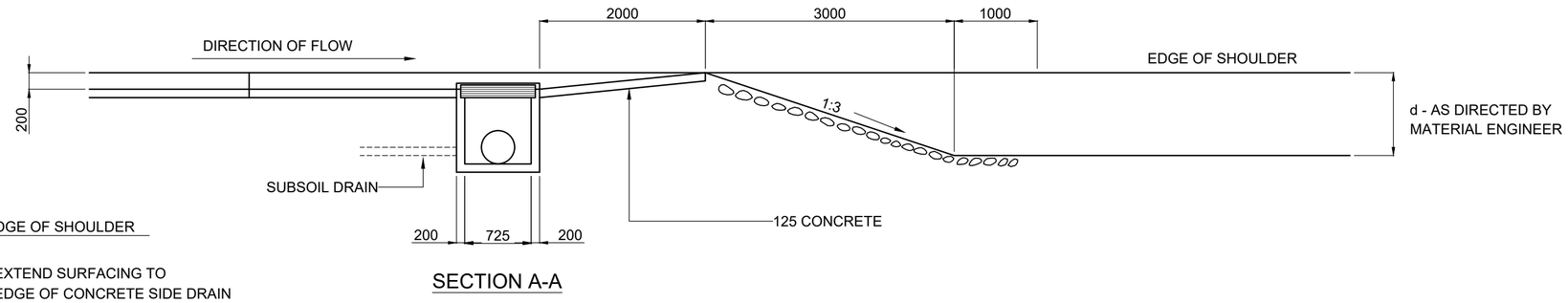

SECTION A-A

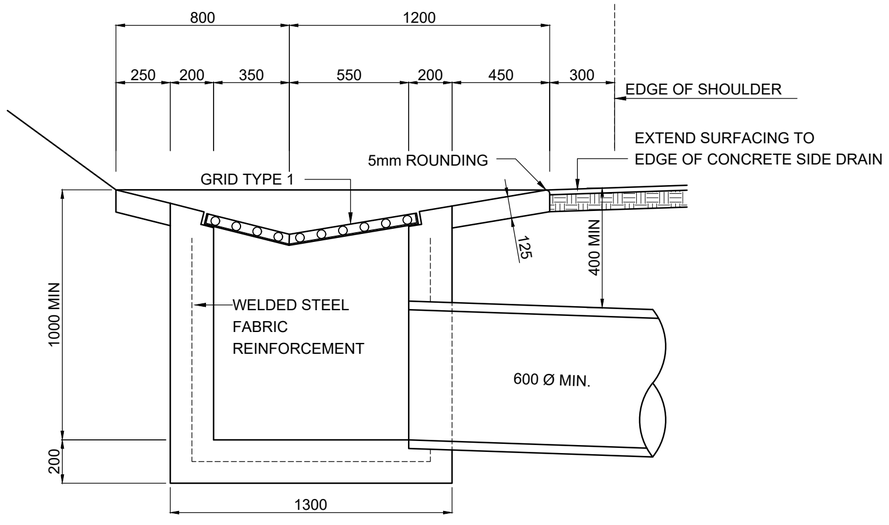

SECTION B-B

NOTES :
1. CONCRETE CLASS 30/20.

2. FINISH - VISIBLE F2
HIDDEN F1

3. REINFORCEMENT-WELDED STEEL FABRIC REF 617. PAYMENT ITEM 23.05 SHALL INCLUDE COMPENSATION FOR REINFORCEMENT.

4. Y DEPENDS ON THE APPROVED DEPTH OF DRAIN.

5. THIS DRAWING IS TO BE READ IN CONJUNCTION WITH DWG. No. WCS/23/3/C1.

No.	DATE	ADDITIONS AND AMENDMENTS
0	OCT - 2023	ORIGINAL VERSION

STANDARD PLANS

WESTERN CAPE GOVERNMENT
DEPARTMENT OF INFRASTRUCTURE
TRANSPORT INFRASTRUCTURE BRANCH

SIDE DRAIN

TRANSITION FROM CONCRETE SIDE DRAIN TO UNLINED SIDE DRAIN

SCALE : N.T.S.

A2 ORIGINAL

INDEX NO.
WCS/23/3/C9

PLAN NO.
SHEET 9 OF 15

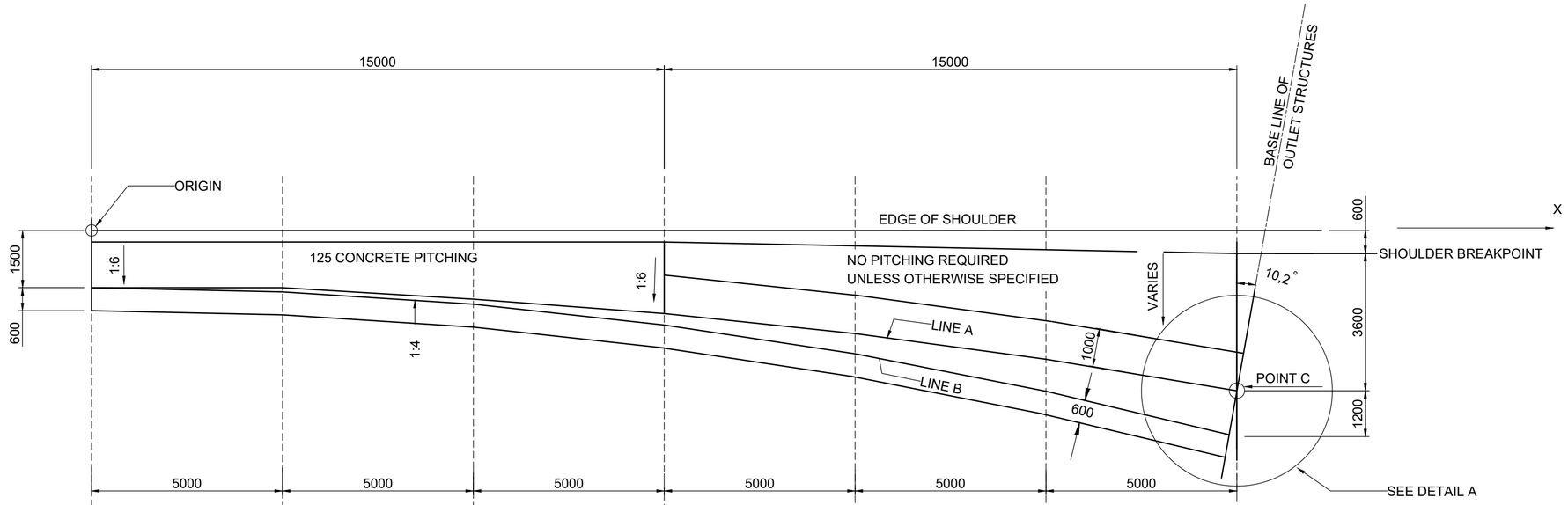

OFFSET FROM EDGE OF SHOULDER	A	1500	1500	1800	2175	2700	3375	4200
	B	1500	1610	1930	2475	3230	4210	5400



STAKING PLAN

NOTES :

1. LINE A: $y = 0.003x^2 + 1.5$
   LINE B: $y = 0.00433x^2 + 1.5$
2. ORIGIN OF SIDE DRAIN END DETAIL CAN BE STARTED INSIDE THE CUTTING.
3. REFER TO DWG. No. WCS/23/3/C11-C13 FOR DETAILS OF OUTLET STRUCTURES.
4. THIS DRAWING IS TO BE READ IN CONJUNCTION WITH DWG. No. WCS/23/3/C1.

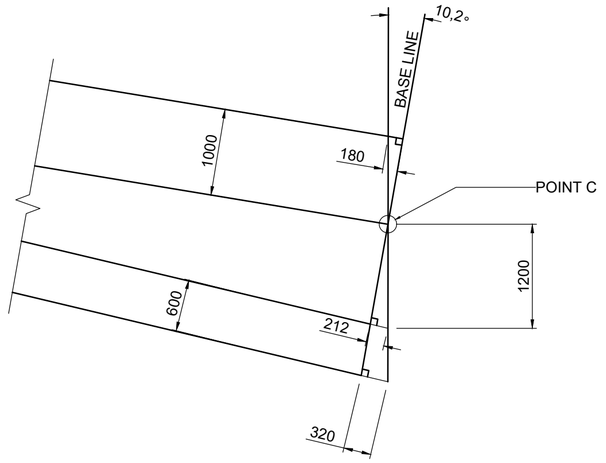

DETAIL A

No.	DATE	ADDITIONS AND AMENDMENTS
0	OCT - 2023	ORIGINAL VERSION

STANDARD PLANS

WESTERN CAPE GOVERNMENT
DEPARTMENT OF INFRASTRUCTURE
TRANSPORT INFRASTRUCTURE BRANCH

SIDE DRAIN

SETTING OUT OF END OF SIDE DRAIN

SCALE : N.T.S.

A2 ORIGINAL

INDEX NO.
WCS/23/3/C10

PLAN NO.
SHEET 10 OF 15

NOTES :

1. CONCRETE CLASS 30/20.
2. SURFACE FINISH - U2
3. ALL EXPOSED SHARP EDGES TO HAVE 20X20mm CHAMFERS.
4. REINFORCEMENT-WELDED STEEL FABRIC REF 617. PAYMENT ITEM 23.05 SHALL INCLUDE COMPENSATION FOR REINFORCEMENT
5. LAST PORTION OF SUBSOIL DRAIN PIPE TO BE UN-PERFORATED.
6. THIS DRAWING IS TO BE READ IN CONJUNCTION WITH DWG. No. WCS/23/3/C1.

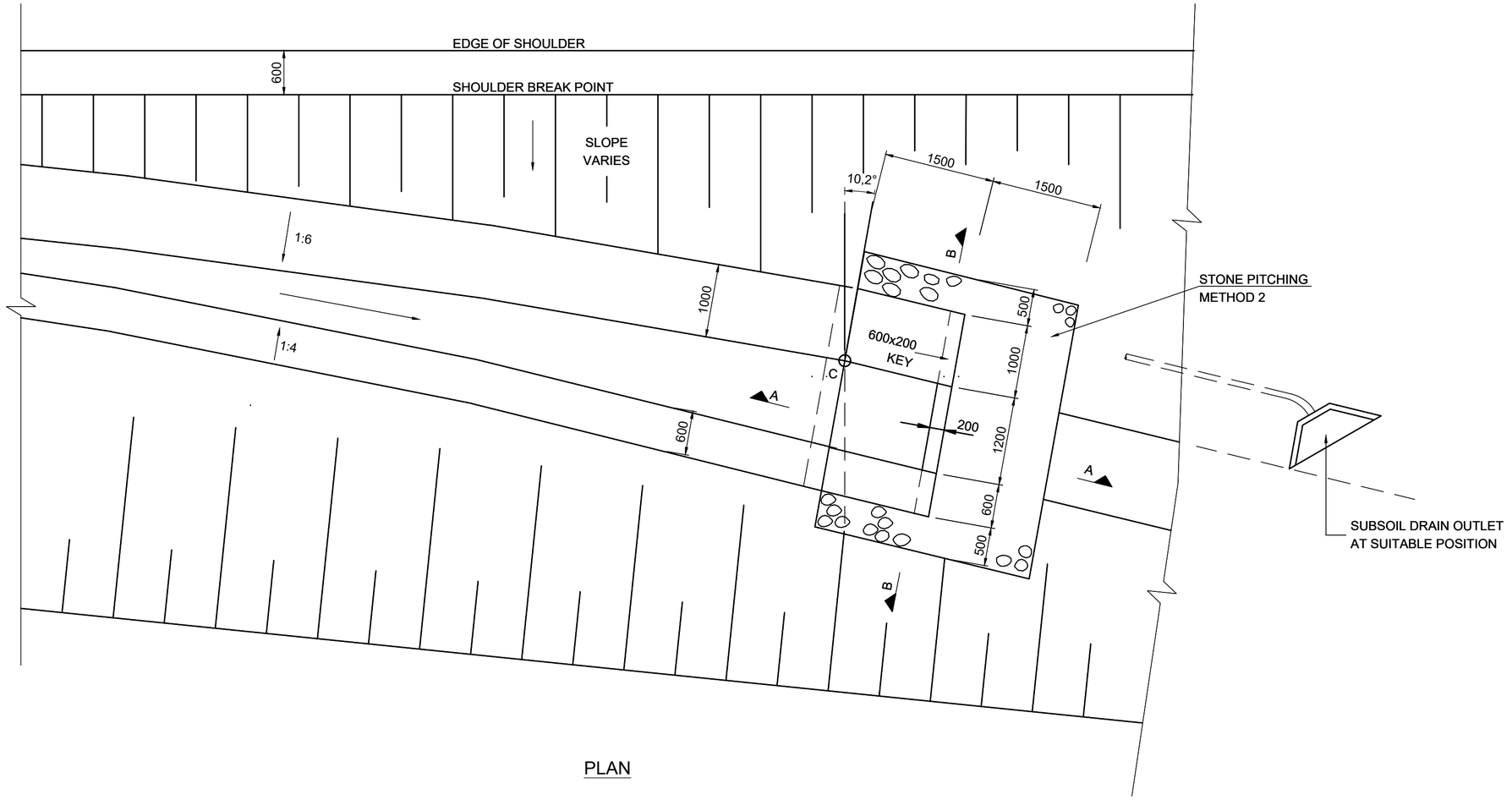

PLAN

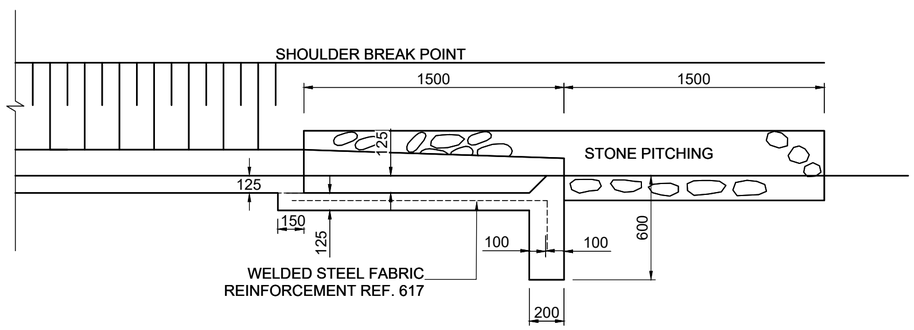

SECTION A-A

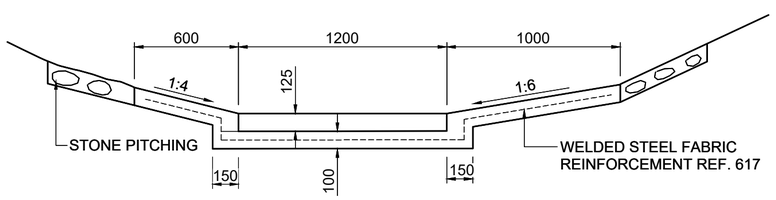

SECTION B-B

No.	DATE	ADDITIONS AND AMENDMENTS
0	OCT - 2023	ORIGINAL VERSION

STANDARD PLANS

WESTERN CAPE GOVERNMENT
DEPARTMENT OF INFRASTRUCTURE
TRANSPORT INFRASTRUCTURE BRANCH

SIDE DRAIN

CONCRETE SIDE DRAIN OUTLET
TYPE 1

SCALE : N.T.S.

A2 ORIGINAL

INDEX NO.
WCS/23/3/C11

PLAN NO.
SHEET 11 OF 15

NOTES :

1. CONCRETE CLASS 30/20.
2. SURFACE FINISH - U2
3. FINISH - VISIBLE F2
   HIDDEN F1
4. ALL EXPOSED SHARP EDGES TO HAVE 20X20mm CHAMFERS.
5. LAST PORTION OF SUBSOIL DRAIN TO BE UN-PERFORATED PIPE.
6. REINFORCEMENT-WELDED STEEL FABRIC REF. 617 IN OUTLET STRUCTURES. PAYMENT ITEM 23.05 SHALL INCLUDE COMPENSATION FOR REINFORCEMENT.
7. USE STANDARD SIZE OF 6mx2m GABION MATTRESSES.

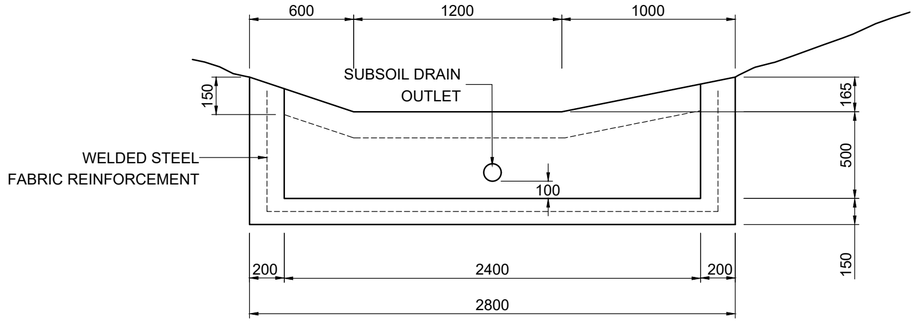

SECTION B-B

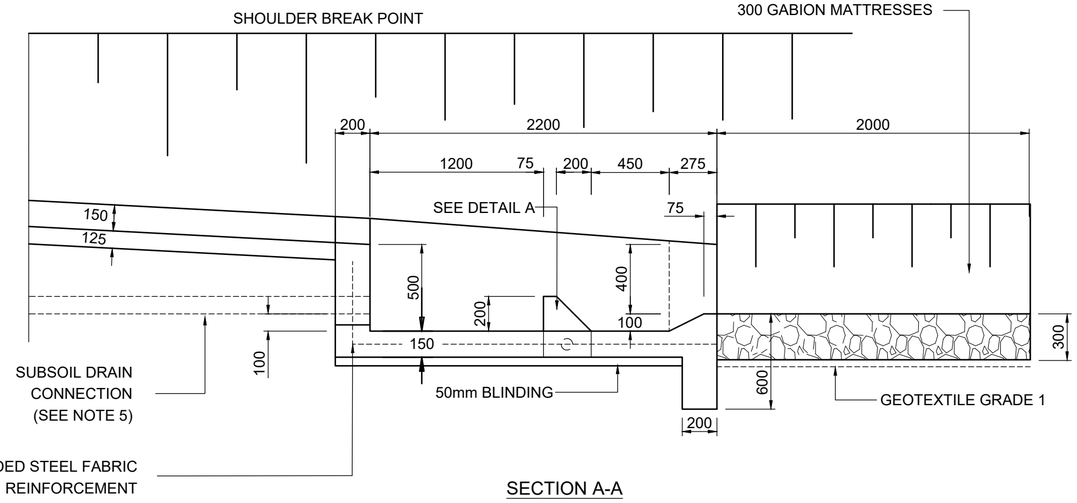

SECTION A-A

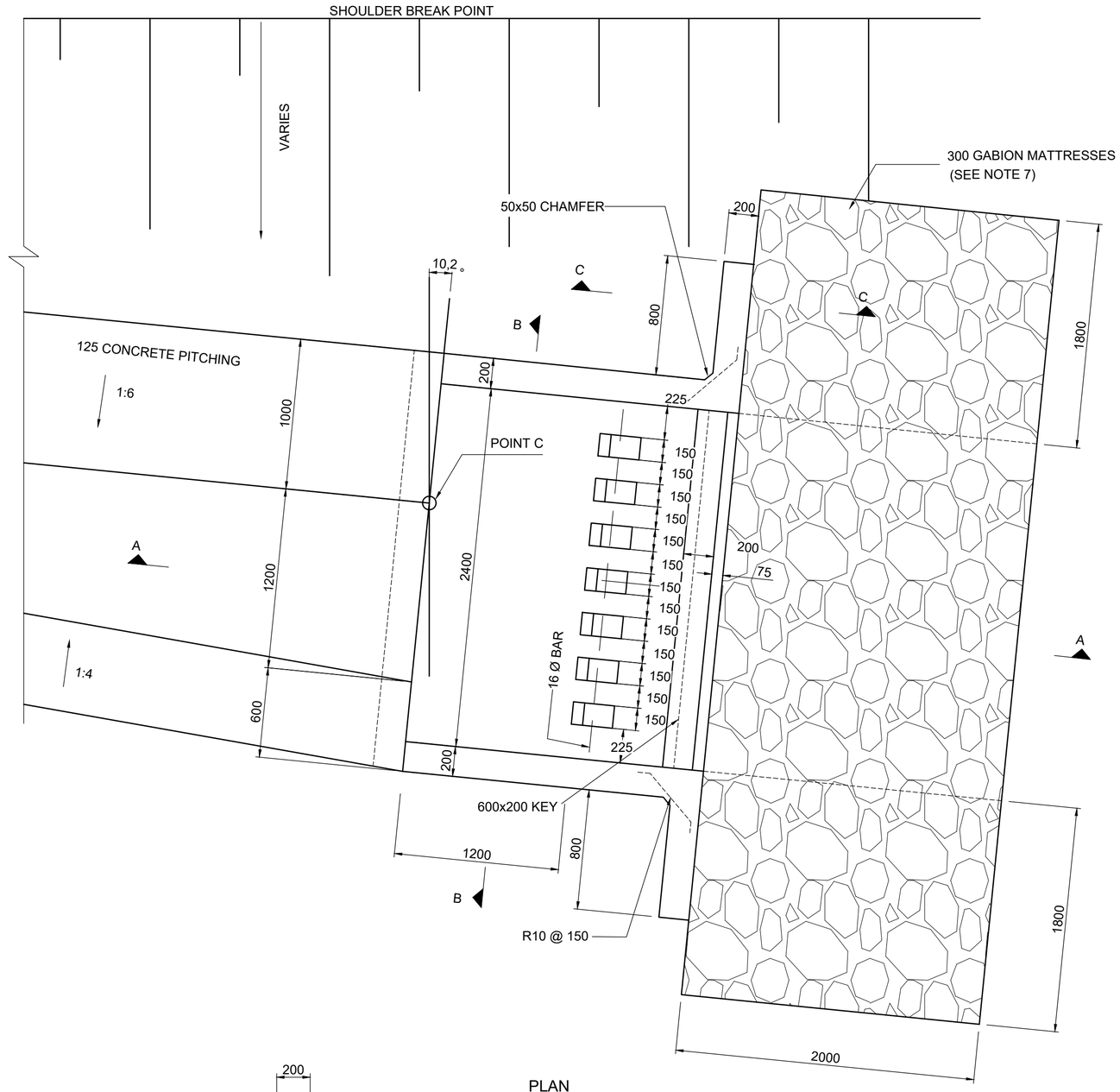

PLAN

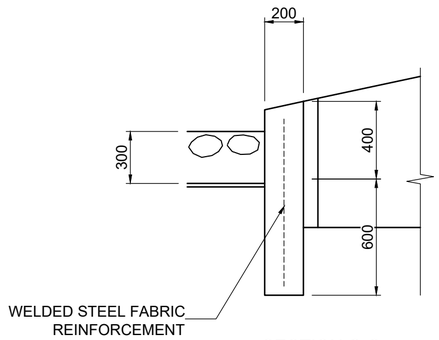

SECTION C-C

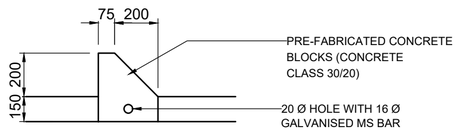

DETAIL A

No.	DATE	ADDITIONS AND AMENDMENTS
0	OCT - 2023	ORIGINAL VERSION

STANDARD PLANS

WESTERN CAPE GOVERNMENT
DEPARTMENT OF INFRASTRUCTURE
TRANSPORT INFRASTRUCTURE BRANCH

SIDE DRAIN

CONCRETE SIDE DRAIN OUTLET
TYPE 2

SCALE : N.T.S.

A2 ORIGINAL

INDEX NO.
WCS/23/3/C12

PLAN NO.
SHEET 12 OF 15

NOTES :

1. CONCRETE CLASS 30/20.

2. FINISH - VISIBLE F2
   HIDDEN F1

3. REINFORCEMENT-WELDED STEEL FABRIC REF. 617.
   PAYMENT ITEM 23.05 SHALL INCLUDE COMPENSATION FOR REINFORCEMENT

4. ALL EXPOSED SHARP EDGES TO HAVE 20X20mm CHAMFER.

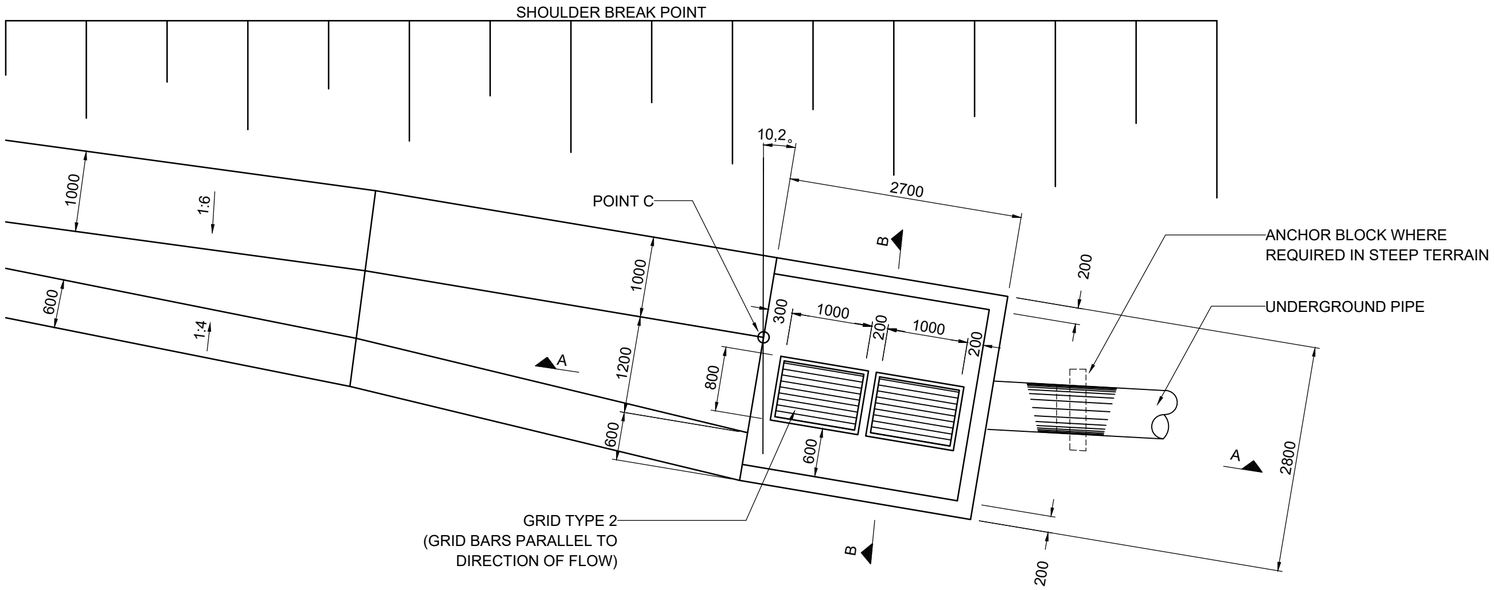

PLAN

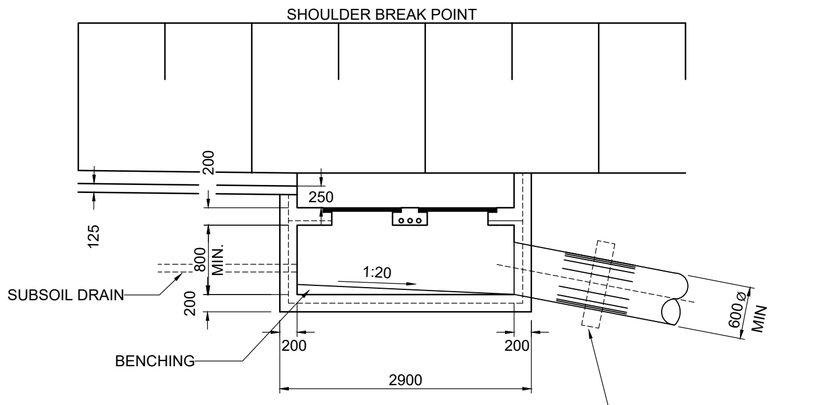

SECTION A-A

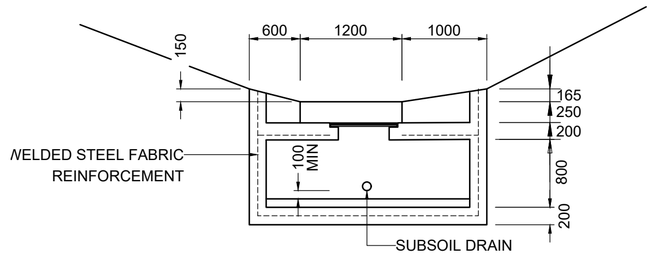

SECTION B-B

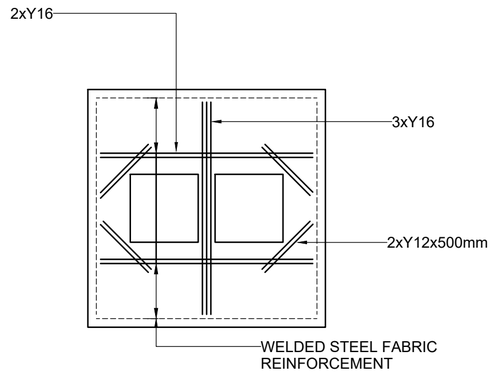

TOP SLAB REINFORCEMENT

No.	DATE	ADDITIONS AND AMENDMENTS
0	OCT - 2023	ORIGINAL VERSION

STANDARD PLANS

WESTERN CAPE GOVERNMENT
DEPARTMENT OF INFRASTRUCTURE
TRANSPORT INFRASTRUCTURE BRANCH

SIDE DRAIN

CONCRETE SIDE DRAIN OUTLET
TYPE 3

SCALE : N.T.S.

A2 ORIGINAL

INDEX NO.
WCS/23/3/C13

PLAN NO.
SHEET 13 OF 15

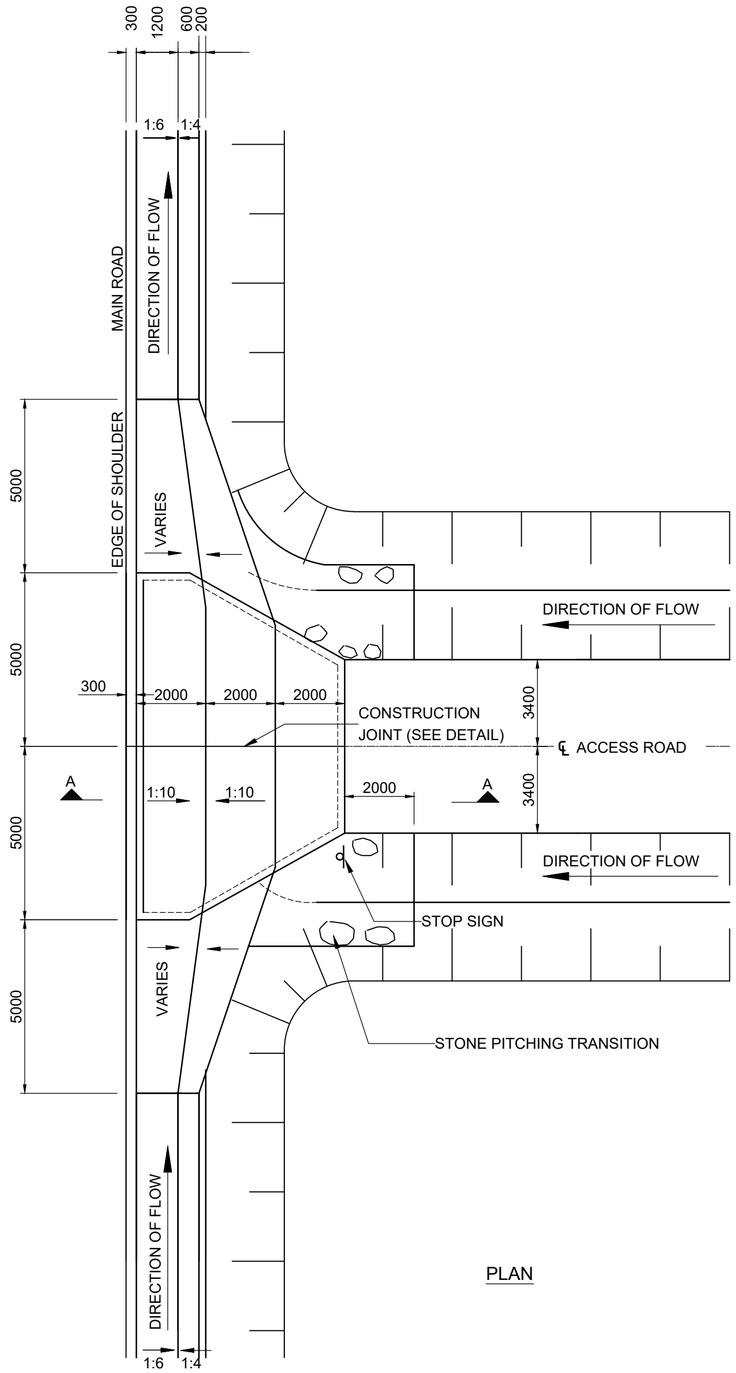

PLAN

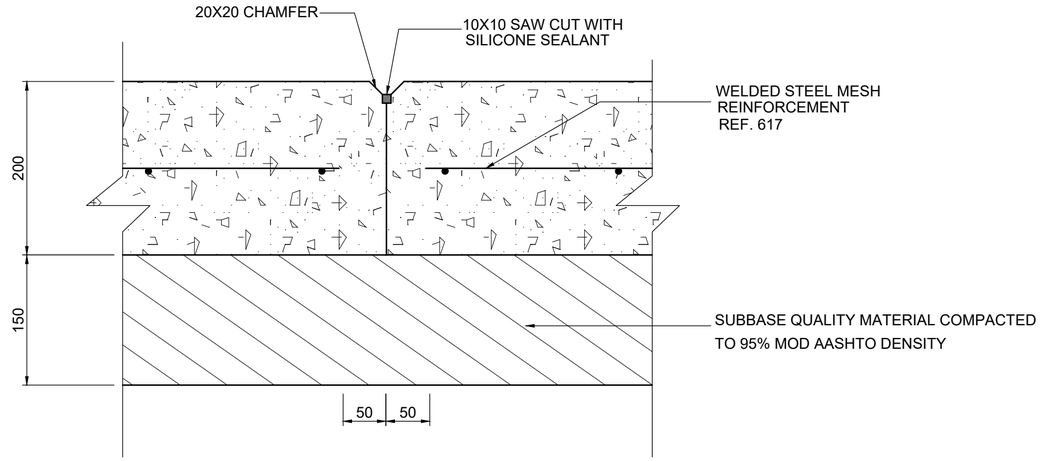

CONSTRUCTION JOINT DETAIL

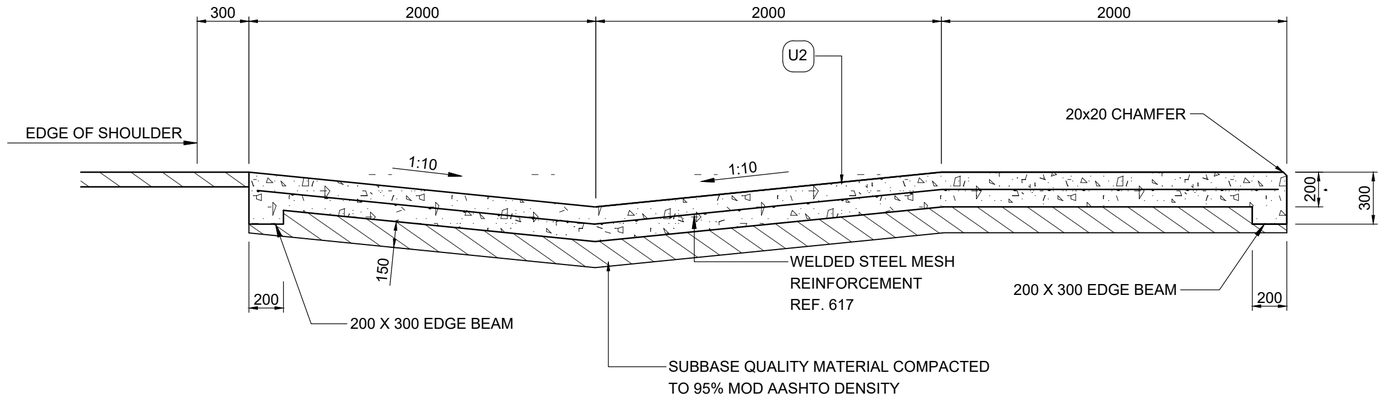

SECTION A-A

NOTES :

1. CONCRETE CLASS 30/20.
2. CONCRETE COVER = MIN. 80mm.
3. SURFACE FINISH : U2 WITH BROOM FINISH.
4. REINFORCEMENT-WELDED STEEL MESH REF. 617
5. THIS DRAWING IS TO BE READ IN CONJUNCTION WITH DWG. No. WCS/23/3/C1.

No.	DATE	ADDITIONS AND AMENDMENTS
0	OCT - 2023	ORIGINAL VERSION

STANDARD PLANS

WESTERN CAPE GOVERNMENT
DEPARTMENT OF INFRASTRUCTURE
TRANSPORT INFRASTRUCTURE BRANCH

SIDE DRAIN

ACCESS IN CONCRETE SIDE DRAIN WITH SLOPE > 2,0%

SCALE : N.T.S.

A2 ORIGINAL

INDEX NO.
WCS/23/3/C14

PLAN NO.
SHEET 14 OF 15

NOTES :

1. CONCRETE CLASS 30/20.
2. FINISH - VISIBLE - F2
   HIDDEN - F1
3. REINFORCEMENT WELDED STEEL FABRIC REF. 617. PAYMENT ITEM 23.05 SHALL INCLUDE COMPENSATION FOR REINFORCEMENT.
4. ALL EXPOSED SHARP EDGES TO HAVE 20X20mm CHAMFERS.

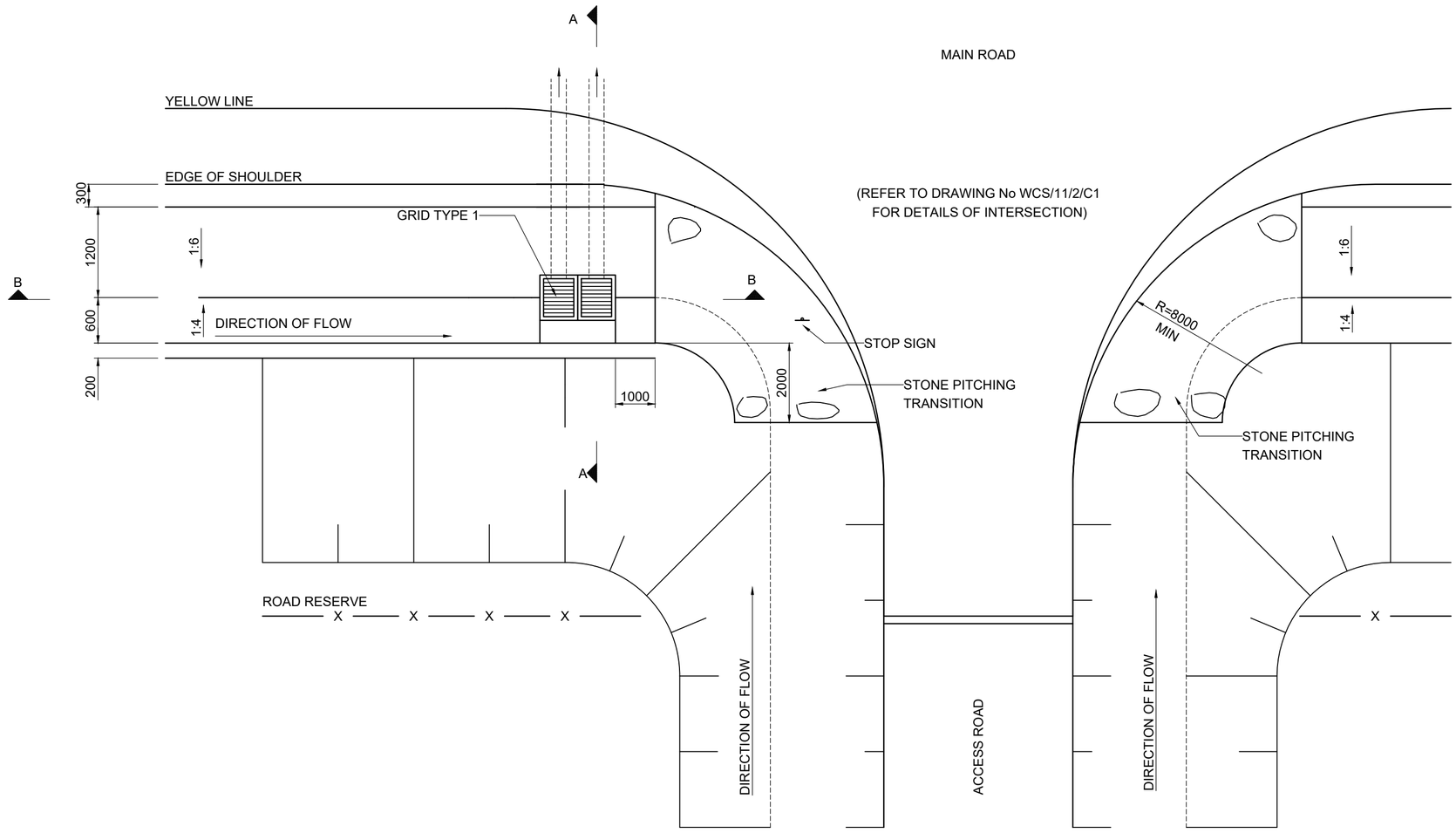

PLAN

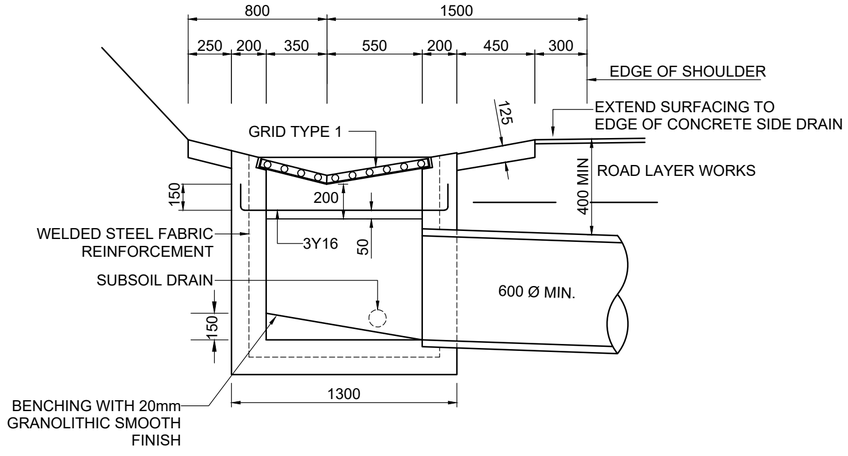

SECTION A-A

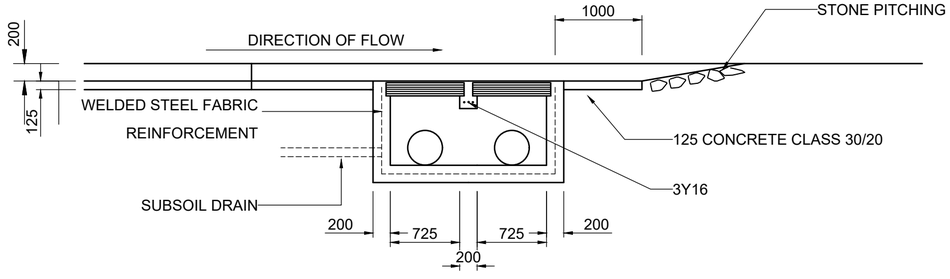

SECTION B-B

No.	DATE	ADDITIONS AND AMENDMENTS
0	OCT - 2023	ORIGINAL VERSION

STANDARD PLANS

WESTERN CAPE GOVERNMENT
DEPARTMENT OF INFRASTRUCTURE
TRANSPORT INFRASTRUCTURE BRANCH

SIDE DRAIN

ACCESS IN CONCRETE SIDE DRAIN WITH SLOPE <2,0%

SCALE : N.T.S.

A2 ORIGINAL

INDEX NO. WCS/23/3/C15

PLAN NO. SHEET 15 OF 15

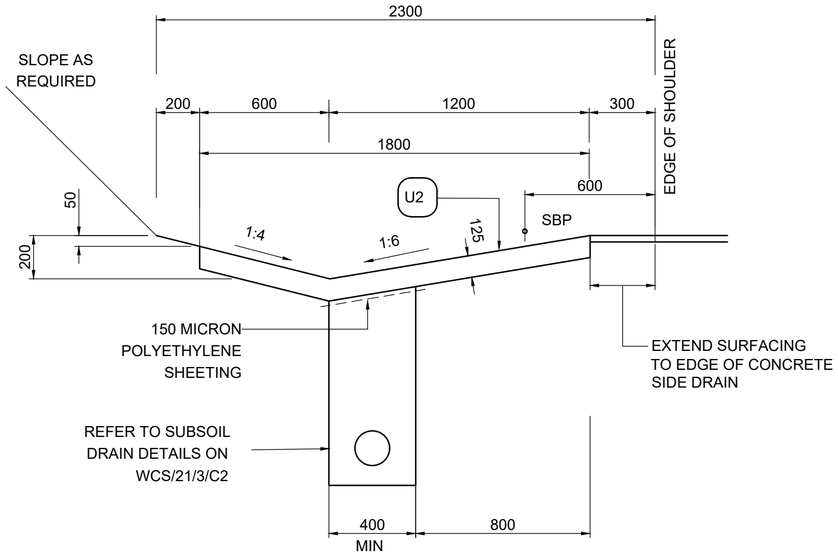

CONCRETE SIDE DRAIN

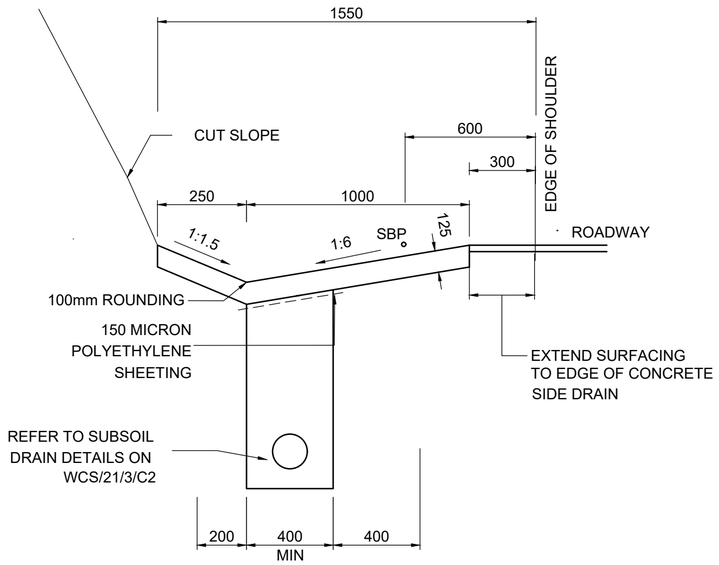

CONCRETE SIDE DRAIN
STEEP CUT SLOPES

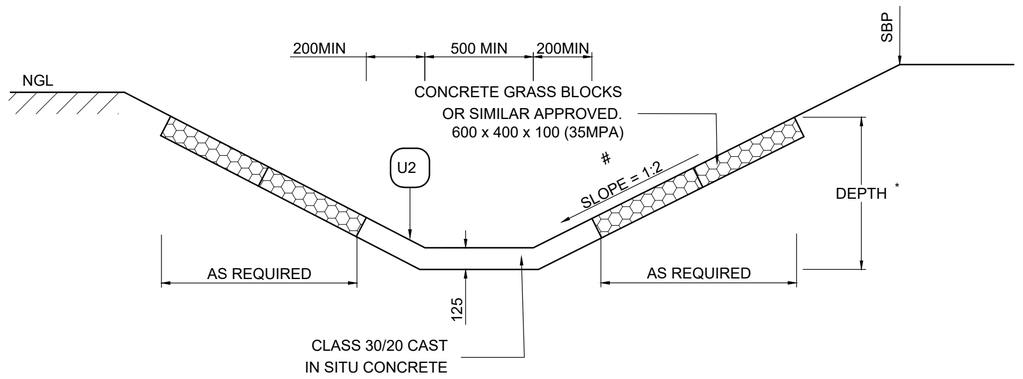

GRASS BLOCK LINED SIDE DRAIN

0.5%> LONGITUDINAL SLOPE > 2% OR
WHERE SPECIFIED BY THE ENGINEER

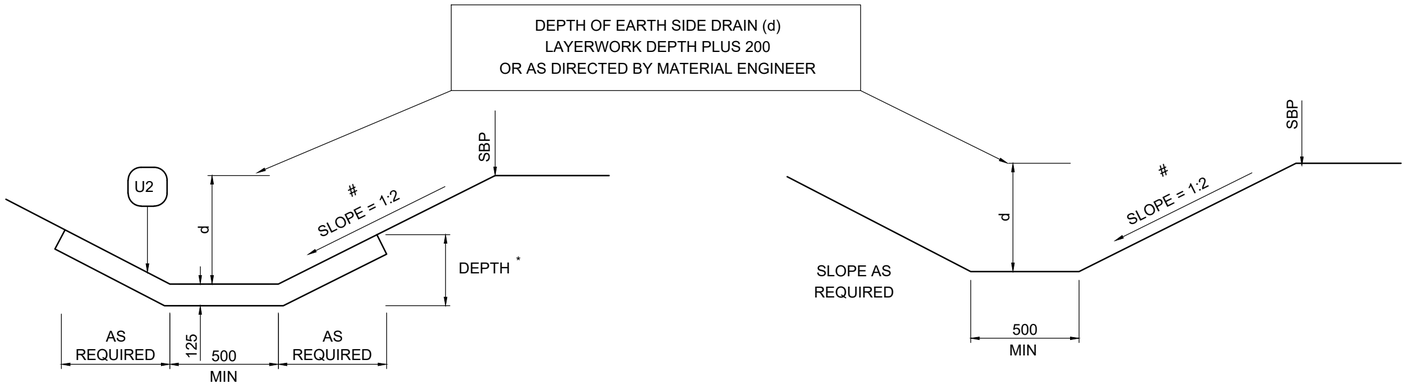

CONCRETE LINED

0.5%> LONGITUDINAL SLOPE > 2% OR
WHERE SPECIFIED BY THE ENGINEER

UNLINED

EARTH SIDE DRAIN

LEGEND

SBP = SHOULDER BREAK POINT

= UNLESS OTHERWISE INDICATED IN THE PROJECT SPECIFICATIONS

DEPTH* - REFER TO DRAWING NO WCS/23/3/D2

NOTES:

1. CONSIDER SOIL TYPE FOR LINING APPLICATION.
2. SUBSOIL DRAIN IS COMPULSORY WITH CONCRETE SIDE DRAIN

No.	DATE	ADDITIONS AND AMENDMENTS
0	OCT - 2023	ORIGINAL VERSION

STANDARD PLANS

WESTERN CAPE GOVERNMENT
DEPARTMENT OF INFRASTRUCTURE
TRANSPORT INFRASTRUCTURE BRANCH

SIDE DRAIN

TYPICAL SIDE DRAIN SECTIONS

SCALE : N.T.S.

A2 ORIGINAL

INDEX NO. WCS/23/3/D1

PLAN NO. SHEET 1 OF 2

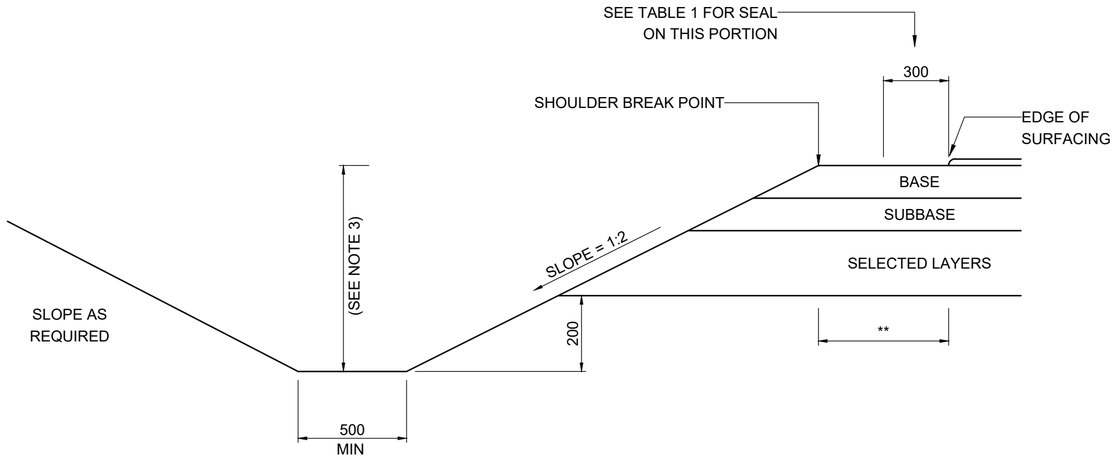

UNLINED EARTH SIDE DRAIN

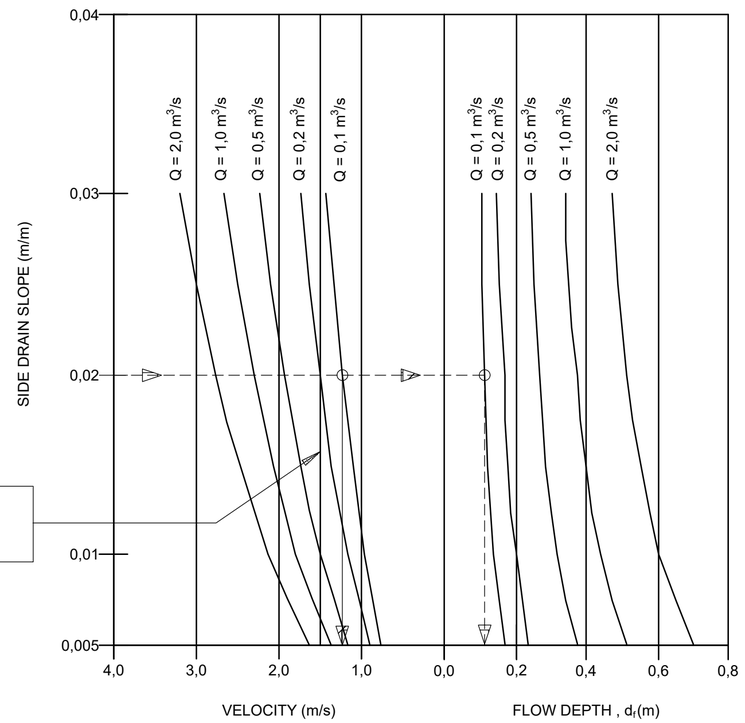

UNLINED EARTH SIDE DRAIN

TABLE 1	
BITUMINOUS SURFACING	APPLICATION
CAPE SEAL	PRIME COAT + 2nd SLURRY
DOUBLE SEAL	PRIME COAT + 7mm STONE
ASPHALT	PRIME COAT

CONSTANTS USED IN CALCULATIONS	
INVERT WIDTH	= 0,5m
CUT SLOPE	= 1:1,5
MANNING CONSTANT	= 0,022 FOR UNLINED DRAINS = 0,012 FOR CONCRETE LINED DRAINS

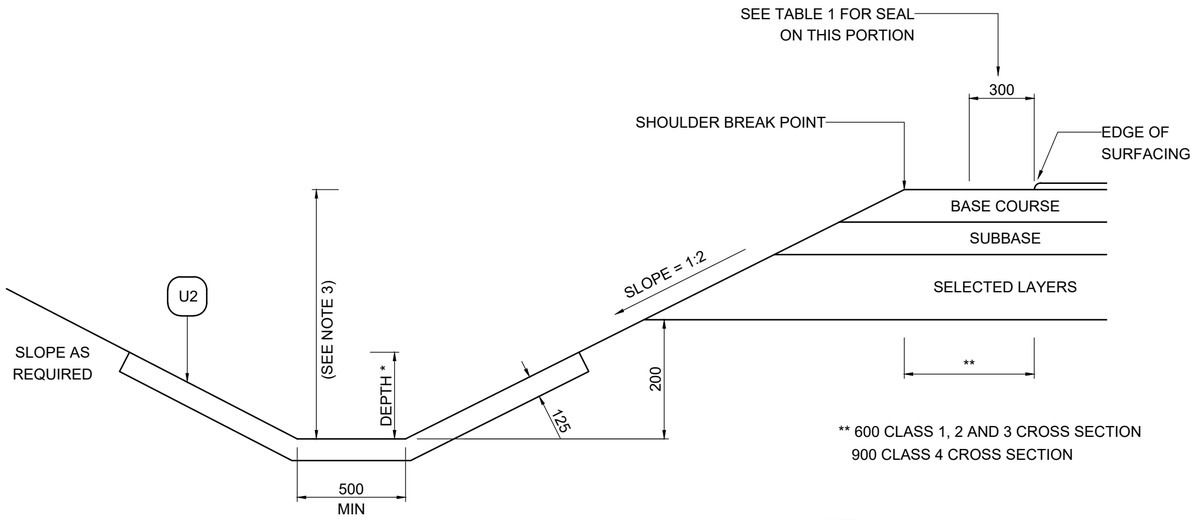

** 600 CLASS 1, 2 AND 3 CROSS SECTION
900 CLASS 4 CROSS SECTION

NOTE :

* DEPTH = d_f + 0,1m

WHERE d_f = FLOW DEPTH FROM LINED EARTH SIDE DRAIN DIAGRAM

LINED EARTH SIDE DRAIN

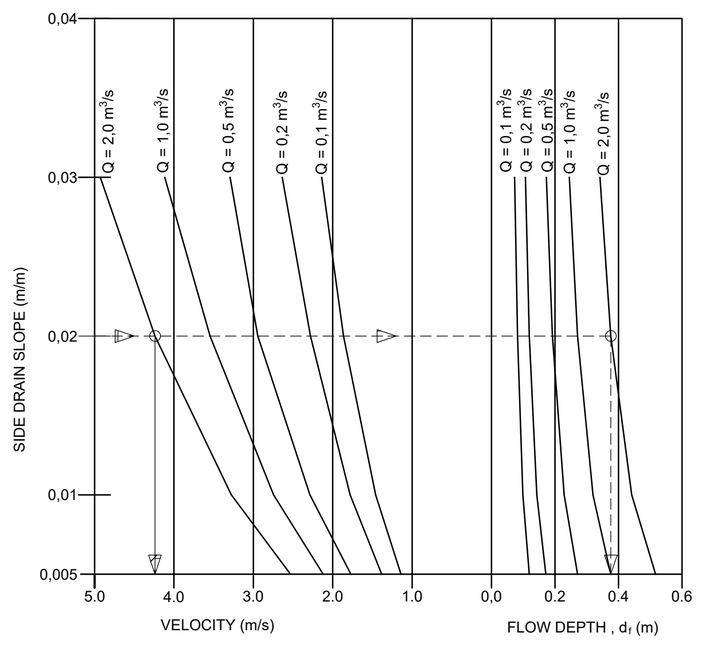

LINED EARTH SIDE DRAIN

NOTES :

1. APPLICATION CRITERIA (UNLINED)
   (a) 0,5% < SLOPE < 2,0%
   (b) IF REQUIRED BY THE ENGINEER

2. USE THE UNLINED EARTH SIDE DRAIN DIAGRAM TO DETERMINE WHETHER A LINED SIDE DRAIN IS REQUIRED.

3. DEPTH OF EARTH SIDE DRAIN - LAYERWORK DEPTH PLUS 200 WHERE THIS DEPTH CANNOT BE ACHIEVED, SHALLOWER DEPTHS MAY BE PERMITTED SUBJECT TO APPROVAL BY THE ENGINEER. IN SUCH CASES IT MUST BE DETERMINED WHETHER A SUBSOIL DRAIN IS REQUIRED.

No.	DATE	ADDITIONS AND AMENDMENTS
0	OCT - 2023	ORIGINAL VERSION

STANDARD PLANS

WESTERN CAPE GOVERNMENT
DEPARTMENT OF INFRASTRUCTURE
TRANSPORT INFRASTRUCTURE BRANCH

SIDE DRAIN

EARTH SIDE DRAINS

SCALE : N.T.S.

A2 ORIGINAL

INDEX NO.
WCS/23/3/D2

PLAN NO.
SHEET 2 OF 2

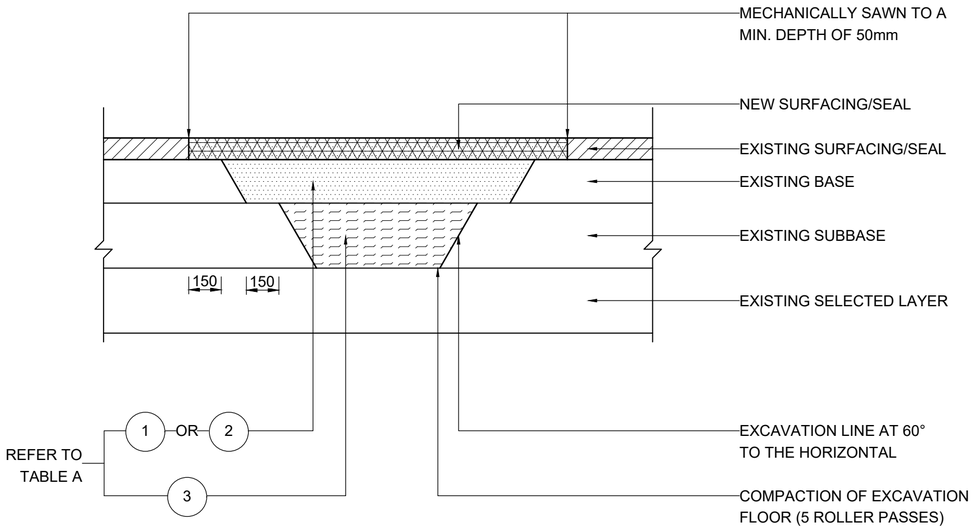

TYPICAL PATCH FOR BASE AND SUBBASE FAILURE

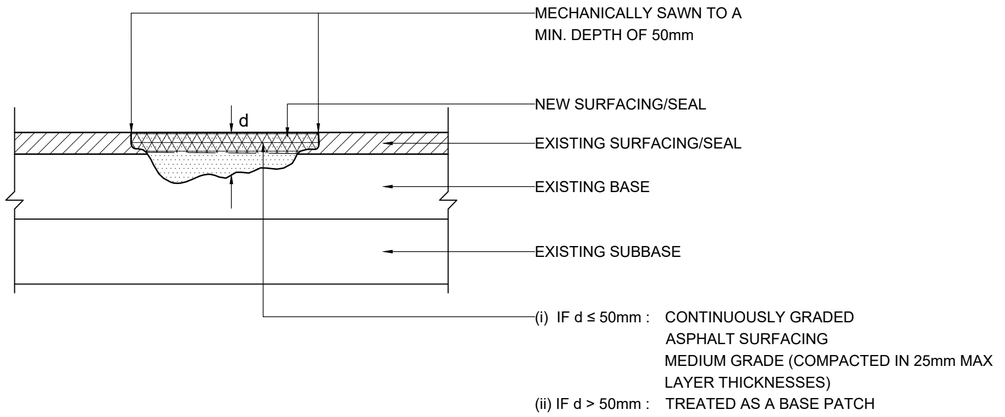

TYPICAL PATCH FOR SHALLOW FAILURE

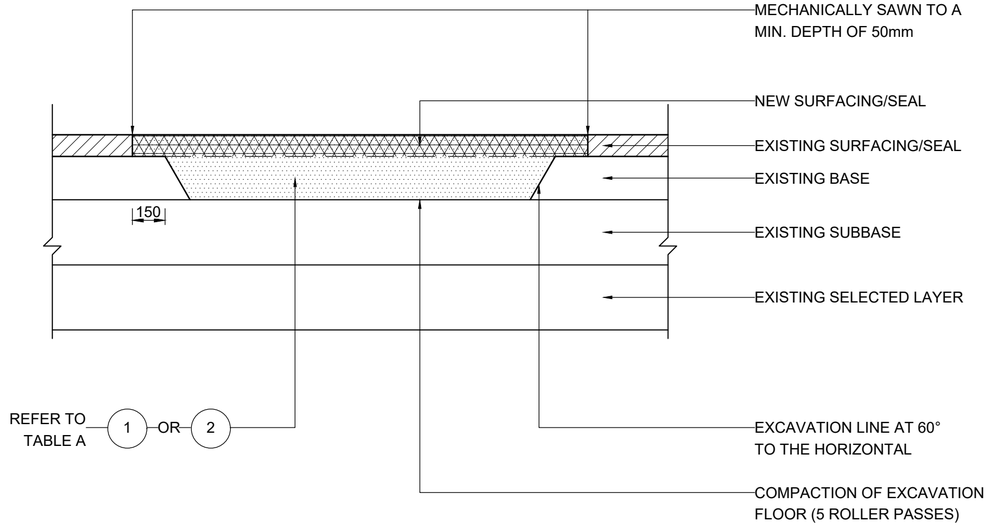

TYPICAL PATCH FOR BASE FAILURE

TABLE A : MATERIAL REQUIREMENTS		
LAYER No	DESCRIPTION	SPECIFICATION SECTION
1	ASPHALT BASE (28mm MAX AGGREGATE SIZE)	4200
2	EMULSION TREATED CRUSHED STONE BASE (G2) (WITH CEMENT FILLER)	3500 3600
3	CEMENT STABILIZED CRUSHED STONE BASE (G2)	3500 3600

NOTE :
THE MIX DESIGNS AND ALL MATERIALS FOR PATCHWORK TO BE SAMPLED AND APPROVED BEFORE CONSTRUCTION OF ANY PATCHWORK.

No.	DATE	ADDITIONS AND AMENDMENTS
0	OCT - 2023	ORIGINAL VERSION

STANDARD PLANS

WESTERN CAPE GOVERNMENT
DEPARTMENT OF INFRASTRUCTURE
TRANSPORT INFRASTRUCTURE BRANCH

PATCHING AND REPAIRING EDGE BREAKS

TYPICAL REPAIRS TO LAYERWORKS FAILURES

SCALE : N.T.S.

A2 ORIGINAL

INDEX NO.
WCS/39/1/C1

PLAN NO.
SHEET 1 OF 1

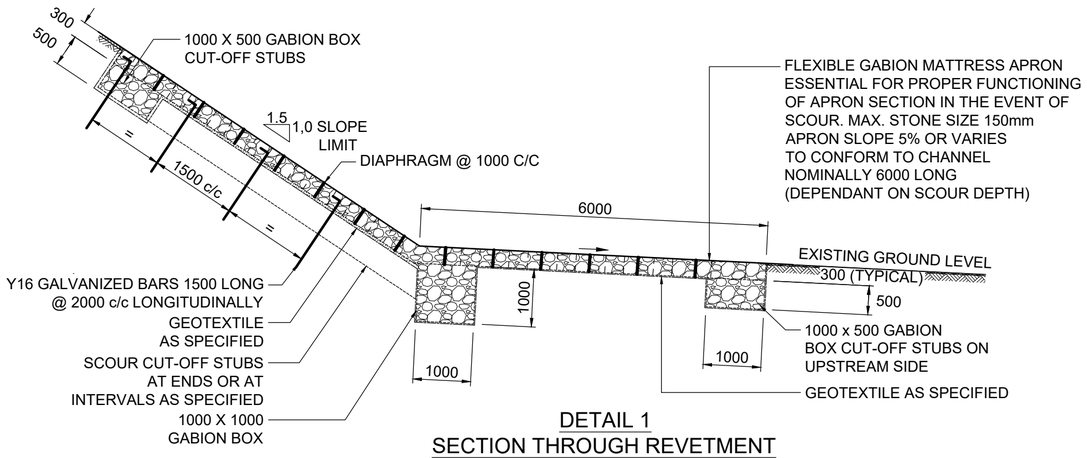

DETAIL 1
SECTION THROUGH REVETMENT

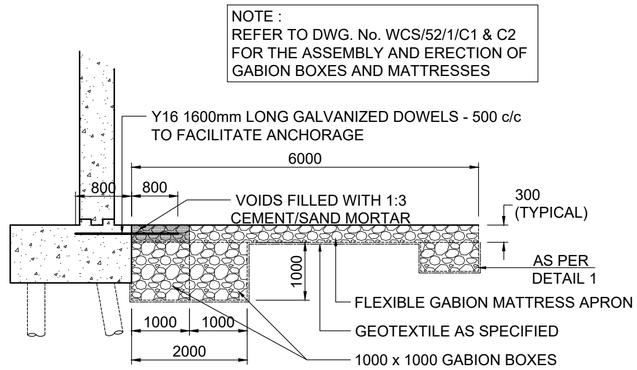

DETAIL 2
SECTION SHOWING APRON PROTECTION FOR ABUTMENT/PIER FOUNDED ON PILES OR CAISSONS

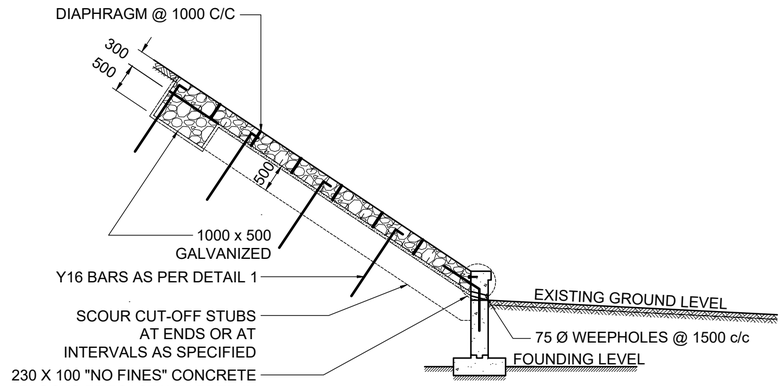

DETAIL 3
SECTION THROUGH REVETMENT WITH CONCRETE WALL BULKHEAD FOR TOE PROTECTION

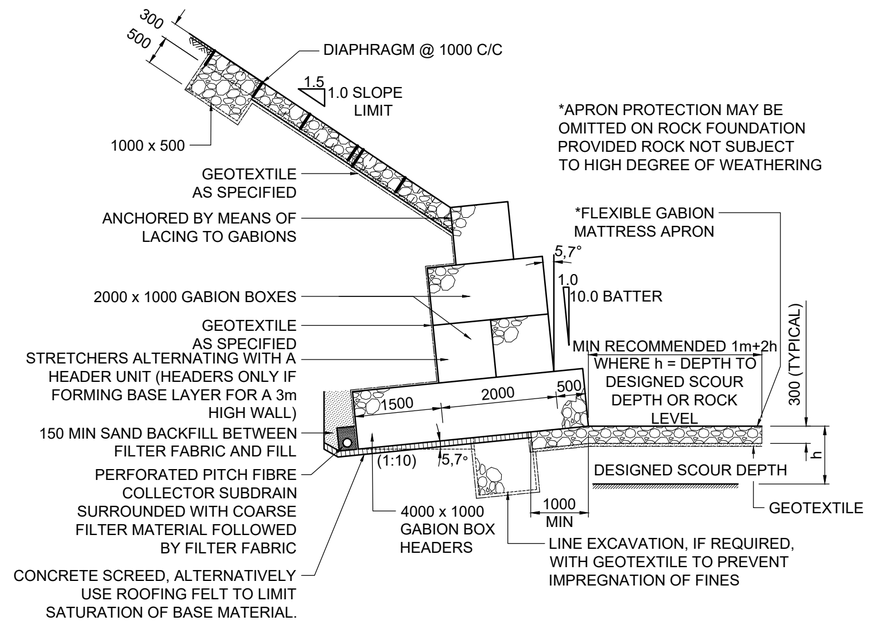

DETAIL 4
SECTION THROUGH REVETMENT WITH GABION WALL BULKHEAD FOR TOE PROTECTION

MATERIAL SPECIFICATIONS

FILTER FABRIC
GEOTEXTILE SHALL COMPLY WITH THE REQUIREMENTS OF CLAUSE 2104(a)(iii) IN THE COLTO DOCUMENT - "STANDARD SPECIFICATIONS FOR ROAD AND BRIDGE WORKS FOR STATE ROAD AUTHORITIES : 1998".

FOR THE USE OF GEOTEXTILE IN RIVER PROTECTION WORKS, IT SHOULD, HOWEVER, BE A GRADE1 NEEDLE PUNCHED NON-WOVEN FILTER FABRIC. THE TABLE BELOW GIVES THE VALUES FOR THE PROPERTIES :

GRADE1 GEOTEXTILE PROPERTIES		
PROPERTY	GRADE1	TEST METHOD
PENETRATION LOAD (minimum), N	4000	3,5 of SABS 0221-1988
PUNCTURE RESISTANCE (maximum), mm	16	Clause 8114
WATER PERCOLATION (minimum), l/m²/s	10	3,7 of SABS 0221-1988
MASS PER UNIT AREA (minimum), g/m²	320	3,4 of SABS 0221-1988

GABIONS :
THE MATERIALS AND MANUFACTURE OF THE HEXAGONAL STEEL WIRE MESH GABIONS SHALL COMPLY WITH THE REQUIREMENTS OF SANS 1580:2010 EDITION 1.3.

WITH REFERENCE TO THE NOMINAL WIRE DIAMETER, ONLY THE FOLLOWING SHALL APPLY :
GABION BOXES : (80x100) WIRE MESH
MESH WIRE : 2,7mm AND PVC COATED
SELVEDGE WIRE : 3,4mm AND PVC COATED
BINDING WIRE : 2,2mm AND PVC COATED

GABION MATTRESSES : (80x100) WIRE MESH
MESH WIRE : 2,7mm AND PVC COATED
SELVEDGE WIRE : 3,4mm AND PVC COATED
BINDING WIRE : 2,2mm AND PVC COATED

THE SPECIFICATION REQUIREMENTS WITH REGARDS TO CONSTRUCTING OF GABIONS ARE CONTAINED IN CLAUSES 5203 TO 5204 IN THE COLTO DOCUMENT - "STANDARD SPECIFICATIONS FOR ROAD AND BRIDGE WORKS FOR STATE ROAD AUTHORITIES : 1998".

COEFFICIENT OF FRICTION AT INTERFACE OF BASELAYER AND THE FOLLOWING FOUNDATION MATERIALS:	f
CLEAN SOUND ROCK	0,7
CLEAN GRAVEL, GRAVEL-SAND MIXTURES, COARSE SAND	0,55-0,60
CLEAN FINE TO MEDIUM SAND, SILTY MEDIUM TO COARSE SAND, SILTY OR CLAYEY GRAVEL	0,45-0,55
CLEAN FINE SAND, SILTY OR CLAYEY FINE TO MEDIUM SAND	0,34-0,45
FINE SANDY SILT, NON-PLASTIC SILT	0,30-0,34
VERY STIFF AND HARD RESIDUAL OR PRECONSOLIDATED CLAY	0,40-0,49
MEDIUM AND STIFF CLAY AND SILTY CLAY	0,30-0,34

AVAILABLE COEFFICIENT OF FRICTION, f AVAILABLE AT INTERFACE OF BASE AND FOUNDATION MATERIAL	PRACTICAL OPTIONS RECOMMENDED TO ENSURE ADEQUATE HORIZONTAL SLIDING RESISTANCE FOR A 4,0m HIGH GABION WALL			
	WITH 5,7° BATTER	WITH 5,7° BATTER+ KEY	PLACED ON HORIZONTAL	PLACED ON HORIZONTAL +KEY
> 0,58	*	*	*	*
> 0,50	*	*	-	*
> 0,45	*	*	-	-
> 0,38	-	*	-	-
< 0,38	DETAIL DESIGN REQUIRED			

IF 3,0m HEIGHT REQUIRED, PROVIDE KEY FLUSH WITH REAR OF 2000x1000 GABION BOX HEADERS AND ENSURE THAT AVAILABLE COEFFICIENT OF FRICTION IS GREATER THAN 0,42 AND BATTER THE GABION AT A MINIMUM OF 5,7°

No.	DATE	ADDITIONS AND AMENDMENTS
0	OCT - 2023	ORIGINAL VERSION

STANDARD PLANS

WESTERN CAPE GOVERNMENT
DEPARTMENT OF INFRASTRUCTURE
TRANSPORT INFRASTRUCTURE BRANCH

PITCHING, STONEWORK AND PROTECTION AGAINST EROSION

TYPICAL GABION PROTECTION DETAILS

SCALE : N.T.S.

A2 ORIGINAL

INDEX NO.
WCS/51/1/D1

PLAN NO.
SHEET 1 OF 4

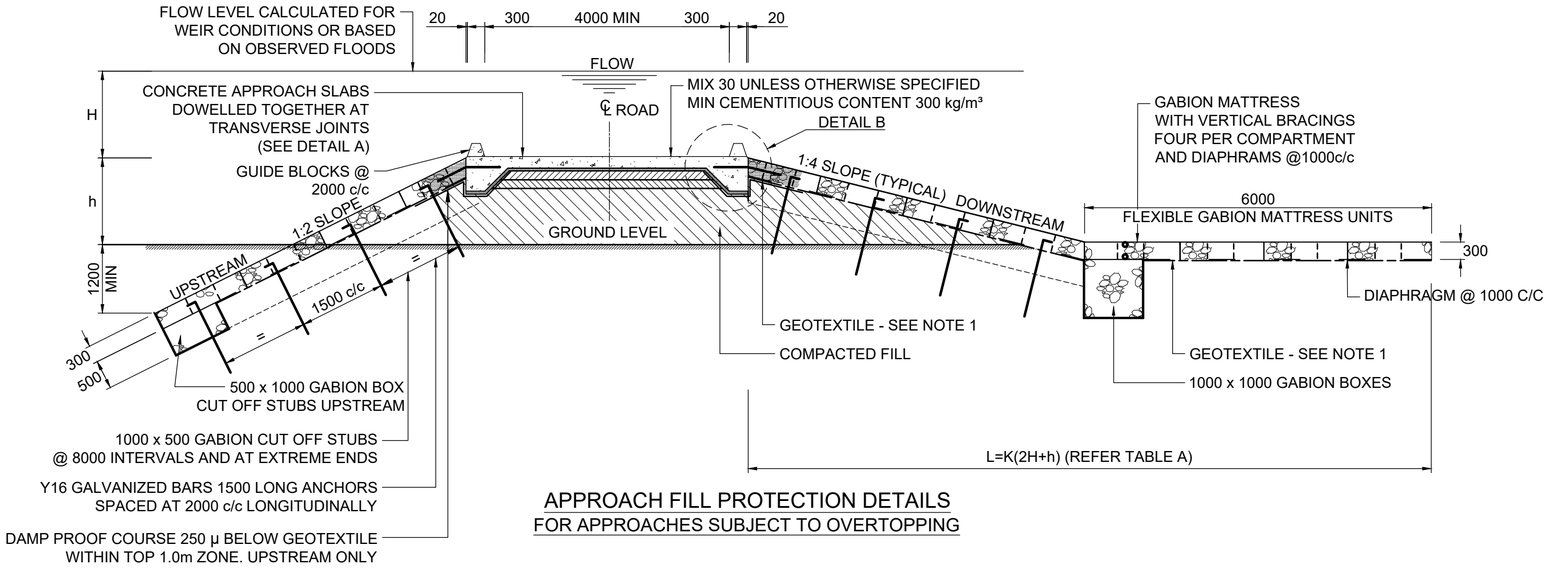

APPROACH FILL PROTECTION DETAILS
FOR APPROACHES SUBJECT TO OVERTOPPING

DOWNSTREAM STABILITY CHECK :

STABILITY MAY BE ACHIEVED BY CONSTRUCTION OF THE SEEPAGE FACE AT ITS STABLE DRAW DOWN ANGLE OR PROVIDING EQUIVALENT RESTRAINT BY MEANS OF ANCHOR RODS. (REFER TO ASCE JOURNAL OF CIVIL MECHANICS AND FOUNDATION - NOV 1966)

CHECK DOWNSTREAM SLOPE: $\beta\omega \leq \tan^{-1} \left[\frac{\gamma - \gamma\omega}{\gamma} \times \tan \beta\right]$

WHERE $\beta\omega$ = STABLE SLOPE UNDER SUBMERGED CONDITIONS
= β DOWNSTREAM SLOPE (ASSUMED ANGLE OF REPOSE SAY 35° BASED ON RANGE 30° TO 50° FOR GRAVEL ROUND TO ANGULAR)
= $\gamma\omega$ UNIT MASS OF WATER (1000 kg/m)³
= γ TOTAL UNIT MASS (eg. 1390 kg/m FOR ROCKFILL)³
HENCE $\beta\omega$ < 15,274°
= 1:3,66
SAY = 1:4 TYPICAL

FOR STEEPER SLOPES ADDITIONAL RESTRAINT SHALL BE PROVIDED UTILISING A DESIGNED ANCHORAGE SYSTEM AT SUITABLE VERTICAL AND HORIZONTAL INTERVALS

NOTES :

1. REFER TO DWG. No. WCS/51/1/D1 FOR GABION PROTECTION DETAILS AND MATERIAL SPECIFICATIONS.
2. REFER TO DWG. No. WCS/52/1/C1 & C2 FOR ASSEMBLY AND ERECTION OF GABION BOXES AND MATTRESSES.

TABLE A

BED MATERIAL	MULTIPLYING FACTOR K
MEDIUM HARD CLAY AND HARDER MATERIAL	1,00
SOFT CLAY	1,50
MEDIUM GRAVEL	1,75
FINE GRAVEL	2,00
SAND	2,50
MEDIUM SAND	3,00
FINE SAND	3,50
VERY FINE SAND WITH SILT	4,25
COARSE GRAVEL INCLUDING COBBLES	1,50
BOULDERS WITH SOME COBBLES AND GRAVEL	1,25

TABLE A :
SHOWING THE MULTIPLE FACTORS FOR CALCULATING THE LENGTH OF APRON FROM THE WEIR CREST FOR DIFFERENT BED MATERIALS. THE LENGTHS SHOWN APPLY TO CHANNEL BEDS AT A STABLE GRADIENT. IF THE GRADIENT IS TOO STEEP THE PROTECTION MUST BE CONTINUED DOWNSTREAM.

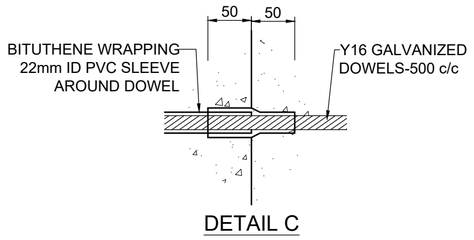

DETAIL C

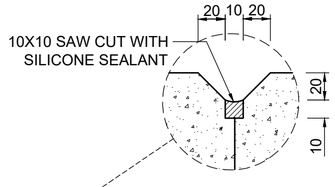

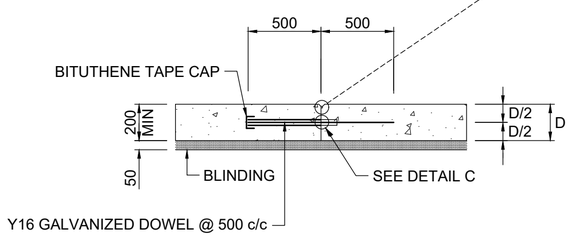

DETAIL A : JOINT AND DOWEL DETAIL ROAD SLAB

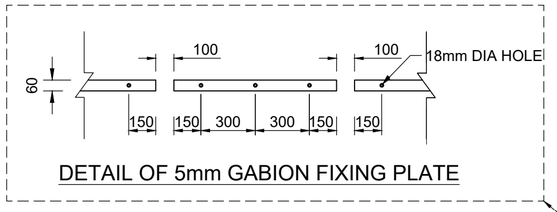

DETAIL OF 5mm GABION FIXING PLATE

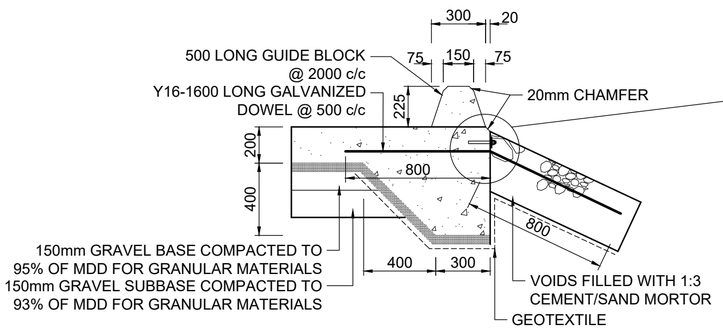

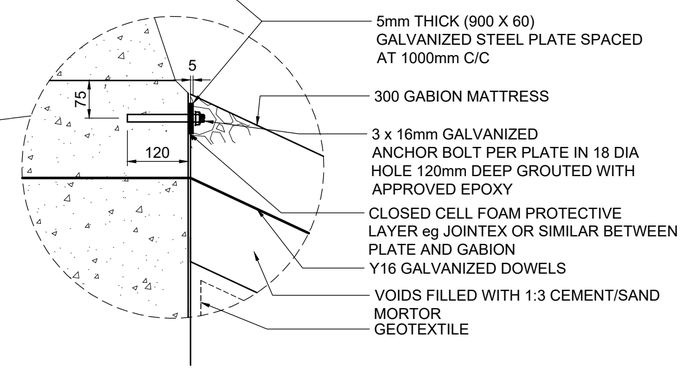

DETAIL B : GUIDE BLOCKS

No.	DATE	ADDITIONS AND AMENDMENTS
0	OCT - 2023	ORIGINAL VERSION

STANDARD PLANS

WESTERN CAPE GOVERNMENT
DEPARTMENT OF INFRASTRUCTURE
TRANSPORT INFRASTRUCTURE BRANCH

PITCHING, STONEWORK AND PROTECTION AGAINST EROSION

CAUSEWAY PROTECTION DETAILS

SCALE : N.T.S.

A2 ORIGINAL

INDEX NO. WCS/51/1/D2

PLAN NO. SHEET 2 OF 4

NOTE ON GROUTED SLOPE REVETMENT :

IF EMBANKMENT REVETMENT IS TO BE GROUTED AFTER ALLOWING FOR SETTLEMENT TO OCCUR, PROVIDE WEEPHOLES @ 500 c/c TO PREVENT FAILURE DUE TO HYDROSTATIC PRESSURES.

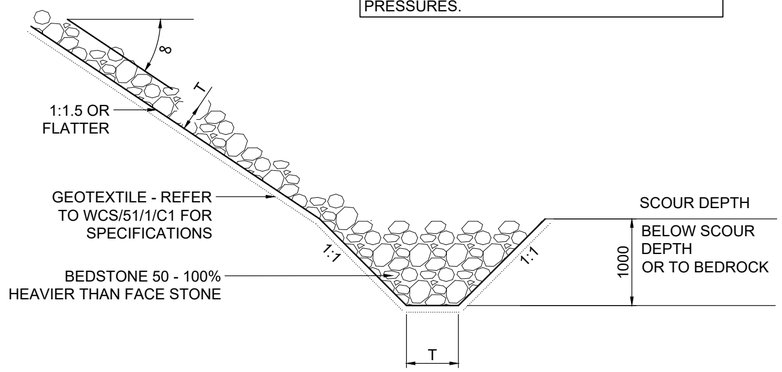

ROCK SLOPE PROTECTION

STONE SIZE :

WHERE WAVE ACTION IS DOMINANT, DESIGN OF ROCK SLOPE PROTECTION SHOULD PROCEED AS DESCRIBED FOR SHORE PROTECTION IN "BANK AND SHORE PROTECTION IN CALIFORNIA HIGHWAY PRACTICE ". WHERE CURRENT VELOCITY GOVERNS, ROCK SIZE MAY BE ESTIMATED BY USING TABLE 1 DERIVED FROM THE FOLLOWING FORMULA :

$$W = \frac{0.011314 \times V \times SGR^6}{(SGR-1)^3 \ SIN^3 \ (p-\infty)}$$

V = STREAM VELOCITY IN METRES/SECOND TO WHICH BANK IS EXPOSED (Va OR Vb)
SGR = SPECIFIC GRAVITY OF THE STONES THE SPECIFIC GRAVITY BEING THE RATIO OF THE MASS IN AIR OF A GIVEN VOLUME OF ROCK PARTICLE AT A STATED TEMPERATURE TO THE MASS IN AIR OF AN EQUAL VOLUME OF DISTILLED WATER AT A STATED TEMPERATURE

p = 70° FOR RANDOMLY PLACED RUBBLE

∞ = FACE SLOPE $\angle \infty$

W = MINIMUM MASS IN kg OF OUTSIDE ROCK FOR NO DAMAGE
(TWO THIRDS OF ROCK SHALL BE HEAVIER)

FOR ROUGH ESTIMATING, SPECIFIC GRAVITY OF ROCK MAY BE ASSUMED AS 2.65, FACE SLOPE AS 1:1.5, IMPINGING VELOCITIES (ON OUTSIDE BENDS DIRECTLY IN LINE WITH THE CENTRAL THREAD) AS 4/3 THE AVERAGE STREAM VELOCITY AND TANGENT VELOCITY AS 2/3 THE MEAN STREAM VELOCITY (SEE TABLE 1).

SECTION THICKNESS $T = 0.1279 \ \sqrt[3]{Wc}$ FOR METHOD A PLACEMENT AND PLUS 25% FOR METHOD B PLACEMENT (WHERE Wc = NOMINAL MASS IN kg FOR RELEVANT PROTECTION CLASS AND WITH MINIMUM STONE MASS $W = 0.032144 \ V^6$ kg)

WHERE :

METHOD A PLACEMENT :

ROCKS SHALL BE PLACED WITH THEIR LONGITUDINAL AXIS NORMAL TO THE ALIGNMENT OF THE EMBANKMENT FACE, WITH ATTITUDE HORIZONTAL OR DIPPED SLIGHTLY INWARD, AND ARRANGED SO THAT EACH ROCK ABOVE THE FOUNDATION COURSE HAS A 3-POINT BEARING ON THE UNDERLYING ROCKS.

METHOD B PLACEMENT :

ROCKS SHALL BE SO PLACED AS TO PROVIDE A MINIMUM OF VOIDS AND THE LARGER ROCKS SHALL BE PLACED IN THE FOUNDATION COURSE AND ON THE OUTSIDE SURFACE OF THE SLOPE PROTECTION. THE ROCK MAY BE PLACED BY DUMPING AND SPREADING IN LAYERS BY BULLDOZERS, ETC. THE MINIMUM STAGE TO WHICH STREAM PROTECTION SHOULD BE CARRIED IS THE STAGE OF DESIGN HIGH WATER. THIS STAGE MAY BE EXCEEDED DURING INFREQUENT FLOODS, BUT OVERTOPPING SELDOM DAMAGES A WELL DESIGNED PREVIOUS REVETMENT.

TABLE 1

APPLICATION OF FORMULA TO DESIGN OF STREAM BANK REVETMENT

MEAN STREAM VELOCITY Vm m/s	PARALLEL FLOW ALONG TANGENT BANK					IMPINGEMENT FLOW AGAINST CURVED BANK				
	STREAM VELOCITY Va m/s	MINIMUM ROCK W kg	PROTECTION CLASS Wc	PLACEMENT METHOD A or B	SECTION THICKNESS T m	STREAM VELOCITY Vb m/s	MINIMUM ROCK W kg/TON	PROTECTION CLASS Wc	PLACEMENT METHOD A or B	SECTION THICKNESS T m
1.4	0.9		NONE			1.8	1.09kg	NONE		
1.8	1.2		NONE			2.4	6.14kg	FACING	B	0.550
2.3	1.5	0.37	NONE			3.3	41.50kg	0.25Ton	B	1.000
2.7	1.8	1.09	NONE			3.7	82.50kg	0.25Ton	B	1.000
3.2	2.1	2.76	FACING	B	0.550	4.3	203kg	0.50Ton	A	1.000
									B	1.280
3.7	2.4	6.14	FACING	B	0.550	4.9	445kg	1.00Ton	A	1.280
									B	1.610
4.1	2.7	12.45	LIGHT	B	0.760	5.5	890kg	2.00Ton	A	1.620
4.6	3.1	28.50	0.25 TON	B	1.000	6.1	1.66Ton	4.00Ton	A	2.030
5.5	3.7	82.50	0.25 TON	B	1.000	7.3	4.86Ton	8.00Ton	A	2.550
6.4	4.3	203.00	0.50 TON	A	1.000	8.5	12.12Ton	SPECIAL		
				B	1.280					
7.3	4.9	445.00	1.00 TON	A	1.280	9.8	28.47Ton	SPECIAL		
				B	1.620					

EXAMPLE :

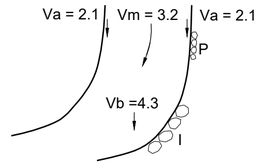

TYPICAL STREAM

SGR = 2.65

Va = 2.1 (Va = 2/3xVm =2.1) FOR PARALLEL FLOW
FIND MINIMUM ROCK W = 2.76kg

Vb = 4.3 (Vb = 4/3xVm = 4.3) FOR IMPINGEMENT FLOW
FIND MINIMUM ROCK W = 203kg

TABLE 2

STANDARD CLASSES OF ROCK SLOPE PROTECTION : Wc

ROCK SIZES	MINIMUM PERCENTAGE LARGER THAN									
	METHOD A PLACEMENT					METHOD B PLACEMENT				
	CLASSES					CLASSES				
	8 TON	4 TON	2 TON	1 TON	0.50 TON	1 TON	0.50 TON	0.25 TON	LIGHT	FACING
8TON	50	0								
4TON	95	50	0							
2TON	--	95	50	0	--	0				
1TON	--	--	95	50	0	50	0			
0.50TON	--	--	--	95	50	--	50	0		
0.25TON	--	--	--	--	95	90	--	50	0	
100kg	--	--	--	--	--	--	90	--	50	0
35kg	--	--	--	--	--	--	--	90	--	50
2kg	--	--	--	--	--	--	--	--	90	90

No.	DATE	ADDITIONS AND AMENDMENTS
0	OCT - 2023	ORIGINAL VERSION

STANDARD PLANS

WESTERN CAPE GOVERNMENT
DEPARTMENT OF INFRASTRUCTURE
TRANSPORT INFRASTRUCTURE BRANCH

PITCHING, STONEWORK AND PROTECTION AGAINST EROSION

ROCK SLOPE PROTECTION DETAILS

SCALE : N.T.S.

A2 ORIGINAL

INDEX NO. WCS/51/1/D3

PLAN NO. SHEET 3 OF 4

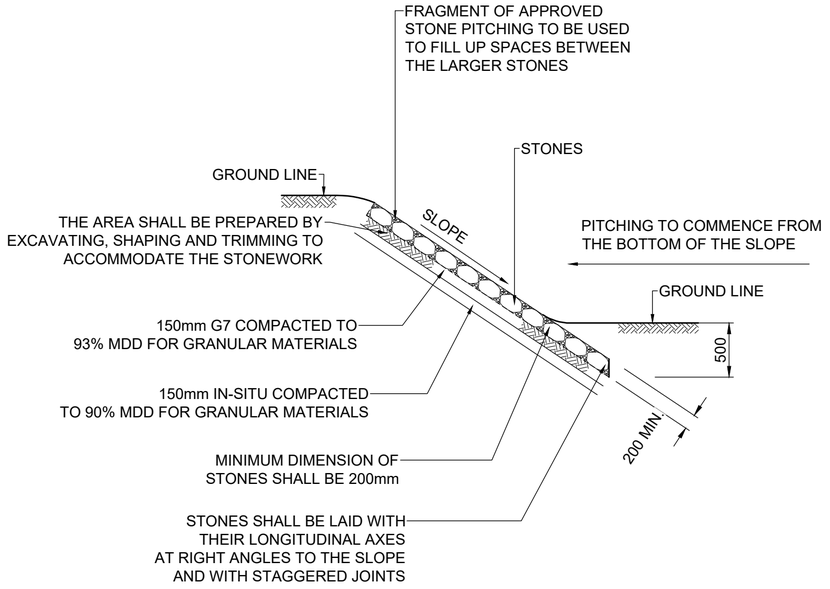

PLAIN STONE PITCHING
METHOD 1

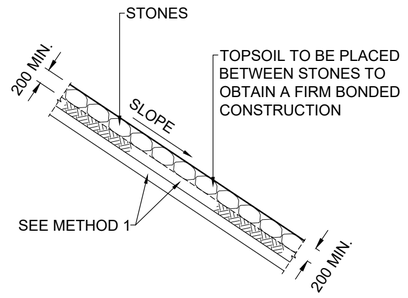

PLAIN STONE PITCHING
METHOD 2

NOTES FOR PLAIN STONE PITCHING METHOD 2:

THE TECHNIQUE AND REQUIREMENT LAID DOWN IN PLAIN STONE PITCHING METHOD 1 SHALL APPLY WITH THE FOLLOWING EXCEPTIONS:

1. NO SMALL STONES SHALL BE USED TO FILL THE SPACES BETWEEN THE LARGER STONES.
2. TOPSOIL SHALL BE INTRODUCED BETWEEN INDIVIDUAL STONES SIMULTANEOUSLY WITH PLACING OF STONES.
3. ROOTED GRASS OR GRASS TUFTS SHALL THEN BE PLACED IN THE TOPSOIL.

NOTES FOR GROUTED STONE PITCHING:

THE TECHNIQUE AND REQUIREMENT LAID DOWN IN PLAIN STONE PITCHING METHOD 1 SHALL APPLY WITH THE FOLLOWING EXCEPTIONS:

1. THE SPACES BETWEEN THE STONES SHALL BE FILLED WITH MORTAR (1 CEMENT : 3 SAND)

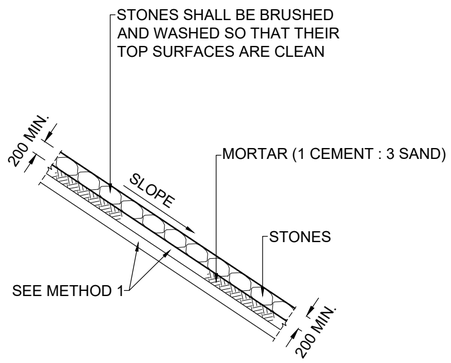

GROUTED STONE PITCHING

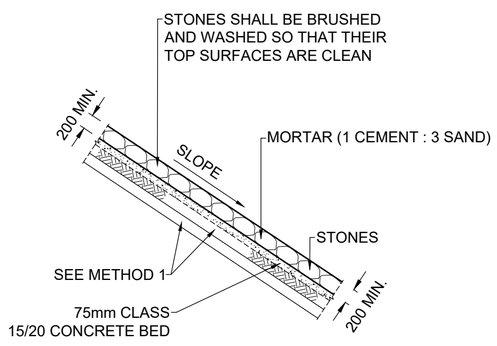

GROUTED STONE PITCHING
ON A CONCRETE BED

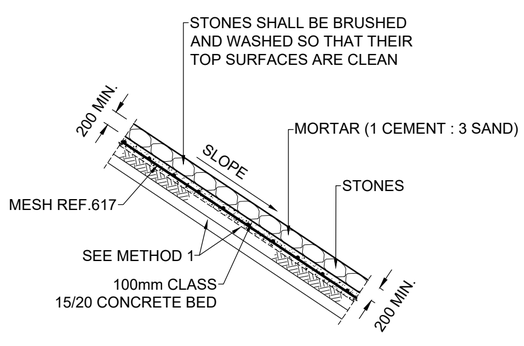

GROUTED STONE PITCHING
ON A REINFORCED CONCRETE BED

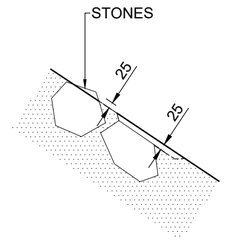

TOLERANCE
DETAIL

No.	DATE	ADDITIONS AND AMENDMENTS
0	OCT - 2023	ORIGINAL VERSION

STANDARD PLANS

WESTERN CAPE GOVERNMENT
DEPARTMENT OF INFRASTRUCTURE
TRANSPORT INFRASTRUCTURE BRANCH

PITCHING, STONEWORK AND PROTECTION AGAINST EROSION

TYPICAL STONE PITCHING DETAILS

SCALE : N.T.S.

A2 ORIGINAL

INDEX NO.
WCS/51/1/D4

PLAN NO.
SHEET 4 OF 4

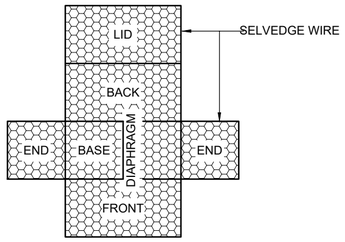

FIGURE 1

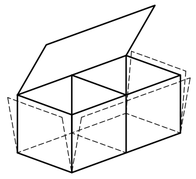

FIGURE 2

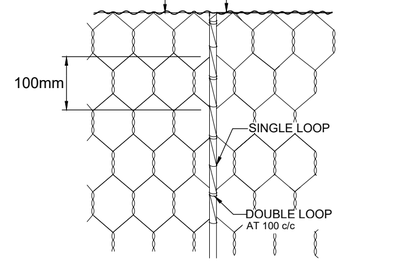

FIGURE 3

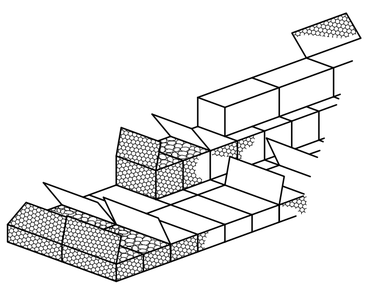

FIGURE 4

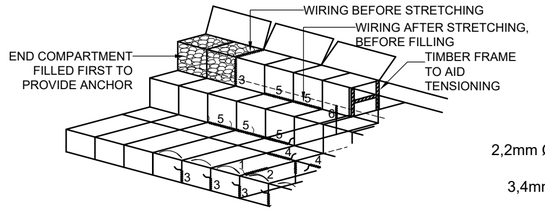

FIGURE 5

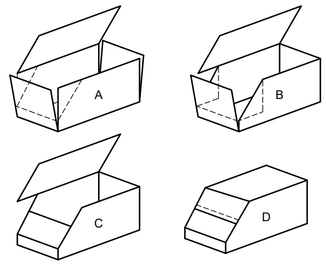

FIGURE 6

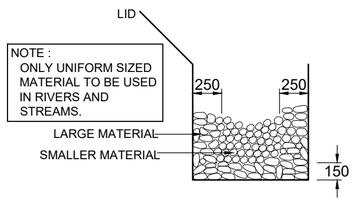

FIGURE 7

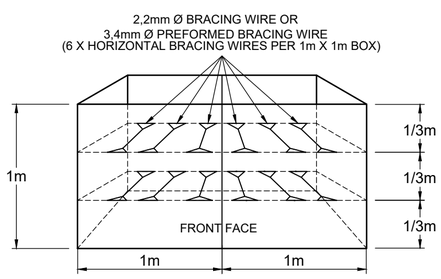

FIGURE 8

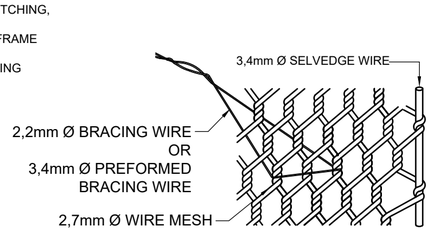

FIGURE 9

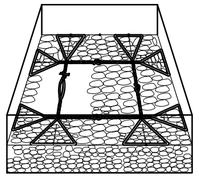

FIGURE 10
(AT CORNERS OF GABION STRUCTURES)

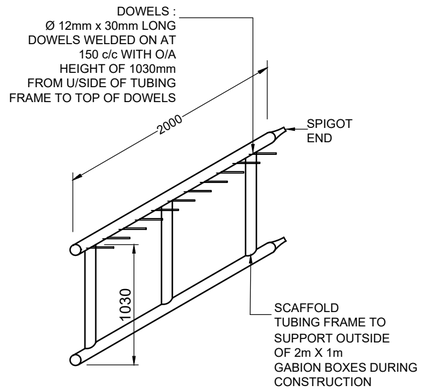

FIGURE 11

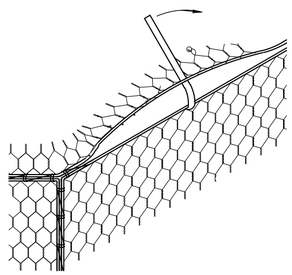

FIGURE 12

ASSEMBLY:

1. UNFOLD EACH GABION ON A HARD FLAT SURFACE. STRETCH IT OUT AND STAMP OUT ANY KINKS. MAKE SURE THAT ALL CREASES ARE IN THE CORRECT POSITIONS FOR FORMING THE BOX - ONE AT THE EDGE OF EACH PANEL AND EACH DIAPHRAGM (FIGURE 1).

2. FOLD THE SIDE AND END PANELS INTO THE UPRIGHT POSITION TO FORM A RECTANGULAR BOX. JOIN THE TOP CORNERS OF THE BOX TOGETHER WITH THE THICK SELVEDGE WIRE STICKING OUT FROM THE CORNERS OF EACH PANEL. THIS ENSURES THAT THE TOPS OF ALL FOUR SIDES OF THE BOX ARE LEVEL AND MEET ANOTHER (FIGURE 2).

3. SECURING THE LACING WIRE AROUND THE TOP SELVEDGES OF THE PANELS TO BE JOINED TOGETHER, LACE THE WIRE AROUND THE TWO EDGE SELVEDGES WITH SINGLE LOOPS AND DOUBLE LOOPS IN TURN AT 100mm INTERVALS (FIGURE 3). FINALLY, FASTEN THE WIRE SECURELY AT THE BOTTOM CORNER SELVEDGES AND POKE THE LOOSE END INSIDE THE GABION BOX. THEN LIFT THE DIAPHRAGMS INTO THE VERTICAL POSITION AND WIRE THEM UP TO THE SIDE PANELS IN EXACTLY THE SAME WAY. THE TIGHTNESS OF THE MESH AND WIRING IS ESSENTIAL AT ALL TIMES.

4. IT IS GOOD CONSTRUCTION PRACTICE TO LACE SMALL GROUPS OF GABION BOXES TOGETHER AS COMPLETE SECTIONS BEFORE JOINING THEM TO THE REST OF THE STRUCTURE, USING EXACTLY THE SAME METHOD AS FOR ASSEMBLING SINGLE BOXES. PLACE THEM FRONT TO FRONT AND BACK TO BACK, SO THAT PAIRS OF FACING LIDS CAN LATER BE WIRED DOWN SIMULTANEOUSLY (FIGURE 4).

5. TO SUPPORT THE FACING AND TO CONNECT THE FRONT PANEL TO THE BACK PANEL OF A GABION 3,4mm Ø PRE-FORMED BRACING WIRES OR 2,2mm Ø BRACING WIRES ARE TO BE USED.

FORMING THE STRUCTURE:

1. THE SURFACE ON WHICH THE GABION BOXES ARE TO BE CONSTRUCTED, SHALL BE LEVELLED TO THE SPECIFIED DEPTH SO AS TO PRESENT AN EVEN SURFACE. CAVITIES BETWEEN HARD PROTRUSIONS SHALL BE FILLED WITH MATERIAL SIMILAR TO THAT BEING USED FOR FILLING THE GABIONS.

2. ONLY ASSEMBLED BOXES, OR GROUPS OF BOXES, SHALL BE POSITIONED IN THE STRUCTURE. THE SIDE OR END, FROM WHICH WORK IS TO PROCEED, SHALL BE SECURED TO EITHER COMPLETED WORK OR BY RODS AS STAKES DRIVEN INTO THE GROUND AT THE CORNERS. THESE SHALL BE SECURED AND REACH AT LEAST TO THE TOP OF THE GABION BOX. FURTHER GABIONS SHALL THEN BE POSITIONED IN THE STRUCTURE AS REQUIRED, EACH BEING SECURELY LACED TO THE PRECEDING ONE AT ALL CORNERS AND DIAPHRAGM POINTS.

3. STRETCH THE OPPOSITE SIDE OF THE BOX OR SECTION BY INSERTING BARS INTO THE BOTTOM CORNERS AND LEVERING THEM FORWARDS BY MEANS OF A WIRE STRAINER OR WINCH OF AT LEAST ONE TON CAPACITY. THE TOP AND BOTTOM ARE THEN KEPT STRETCHED IN THIS WAY UNTIL THE GABION HAS BEEN FILLED. WHILE THE GABION IS BEING STRETCHED, ENSURE THAT THE OPPOSITE WIRING OR ANCHORING HAS BEEN PROPERLY CARRIED OUT AND IS NOT PULLING APART OR COLLAPSING (FIGURE 5). THE NEXT STEP IS TO WIRE ALL THE OTHER SIDES AND ENDS OF THE STRETCHED SECTION TO ADJOINING ALREADY FILLED GABIONS (FIGURE 5). THE STRONG INTER-CONNECTION OF ALL UNITS IN A GABION STRUCTURE IS AN IMPORTANT FEATURE OF THE TECHNIQUE AND IT IS THEREFORE ESSENTIAL THAT THE WIRING IS SECURE. TENSION ON THE GABION BOXES SHALL BE RELEASED ONLY WHEN THEY ARE SUFFICIENTLY FULL TO PREVENT THE MESH FROM SLACKENING.

4. WHERE GABION STRUCTURES WITH NON-RECTANGULAR SHAPES ARE SPECIFIED, MODIFICATIONS TO THE BOXES ARE REQUIRED. GABION BOXES ARE FLEXIBLE ENOUGH TO CONFORM TO BENDS DOWN TO A RADIUS OF 25m WITHOUT MITRING. FIRST WIRE A NUMBER OF BOXES TOGETHER AND BEND THEM UP TO THE CURVE SET OUT PREVIOUSLY, HOLDING THEM IN POSITION DURING FILLING. OTHER SHAPES, BEVELS AND MITRES, SHOULD BE FORMED BY CUTTING AND FOLDING THE PANELS TO THE REQUIRED ANGELS AND SIZES (FIGURE 6). THE CUT EDGES OF THE MESH SHALL BE SECURELY LACED TOGETHER WITH LACING WIRE.

ROCK FILLING:

1. FILLING SHALL BE CARRIED OUT ONLY WHILST GABION BOXES ARE UNDER TENSION. FILLING MATERIAL SHALL CONSIST OF STONE SO PLACED TO PRODUCE A NEAT FACE AND LINE WITH A MINIMUM OF VOIDS.

2. FILLING MATERIAL SHOULD BE CLEANED, HARD UNWEATHERED BOULDERS OR ROCK FRAGMENTS. NO ROCK FRAGMENTS SHALL EXCEED THE MAXIMUM SIZE GIVEN IN TABLE 1 BELOW AND AT LEAST 85% OF THE ROCKS SHALL BE OF A SIZE EQUAL TO OR ABOVE THE AVERAGE LEAST DIMENSION GIVEN IN TABLE 1.

TABLE 1

DEPTH OF CAGE (m)	ROCK SIZE ACCORDING TO THE LARGEST DIMENSION OF ROCK	
	AVERAGE LEAST DIMENSION (mm)	MAXIMUM (mm)
0.2	125	150
0.3	125	200
0.5	125	250
1.0	125	250

3. IN AREAS WHERE LARGE ENOUGH FILL IS DIFFICULT TO OBTAIN, THE COMPARTMENT IS LINED WITH LARGE MATERIAL AND THE INTERIOR FILLED WITH SMALLER. THE SMALL MATERIAL CAN BE 10% OF THE FILL (FIGURE 7). CARE SHALL BE TAKEN IN PACKING THE VISIBLE FACES OF GABION BOXES WHERE ONLY SELECTED STONE OF THE SPECIFIED SIZE SHALL BE USED SO AS TO OBTAIN AN EVEN FACED FINISH.

4. INTERNAL HORIZONTAL BRACING WIRE SHALL BE PROVIDED AT 330mm VERTICAL CENTRES IN 1,0m DEEP UNITS AT A RATIO OF FOUR TO EVERY 1,0m³ OF FILLING. THESE BRACING WIRES SHALL BE WRAPPED AROUND TWO MESH WIRES (FIGURE 9) AND EXTENDED FROM FRONT TO BACK SO POSITIONED TO ENSURE A NEAT FENCE AND LINE FREE OF EXCESSIVE BULGES AND DEPRESSION. GABION BOXES SHALL BE FILLED IN STAGES AND HORIZONTAL BRACING WIRES INSERTED AS FILLING IS BROUGHT UP (FIGURE 8). BRACING IN BOTH DIRECTIONS SHOULD BE USED IN GABIONS AT CORNERS OF STRUCTURES (FIGURE 10). AS AN ADDITIONAL MEASURE, SCAFFOLD PLANKING AS SHUTTERING ALONG THE FRONT FACE OR A PRE-FABRICATED SCAFFOLD TUBING FRAME SYSTEM CAN BE USED (FIGURE 11) TO ENSURE A NEAT FACE AND LINE.

5. LEVEL OFF THE FILL 25mm TO 50mm ABOVE THE TOP OF THE MESH TO ALLOW FOR SETTLEMENT. GABION BOXES SHALL BE OVER FILLED BY 20 TO 50mm ABOVE THEIR TOPS TO ALLOW FOR SUBSEQUENT SETTLEMENT.

6. STRETCH THE LIDS TIGHTLY OVER THE FILLING USING A CROWBAR. SECURE THE CORNERS FIRST, BY MEANS OF THE THICK SELVEDGE WIRE PROTRUDING FROM THE LID CORNERS, TO ENSURE THAT THERE IS ENOUGH MESH TO COVER THE WHOLE AREA. SOME FILLING MAY HAVE TO BE REMOVED FROM THE TOP OF THE GABION BOX TO PREVENT THE LID FROM OVERSTRAINING, THEN SECURELY WIRE IT TO THE TOPS OF THE SIDES. ENDS AND DIAPHRAGMS, USING THE ALTERNATE SINGLE AND DOUBLE LOOPS (FIGURE 12). TIGHTNESS OF MESH, WELL PACKED FILLING AND SECURE LACING IS ESSENTIAL IN ALL STRUCTURES.

IN STREAM FLOW:

1. MATERIAL TO BE SIZED ACCORDING TO THE VELOCITY.

No.	DATE	ADDITIONS AND AMENDMENTS
0	OCT - 2023	ORIGINAL VERSION

STANDARD PLANS

WESTERN CAPE GOVERNMENT
DEPARTMENT OF INFRASTRUCTURE
TRANSPORT INFRASTRUCTURE BRANCH

GABIONS

ASSEMBLY AND ERECTION OF GABION BOXES

SCALE : N.T.S.

A2 ORIGINAL

INDEX NO.
WCS/52/1/C1

PLAN NO.
SHEET 1 OF 2

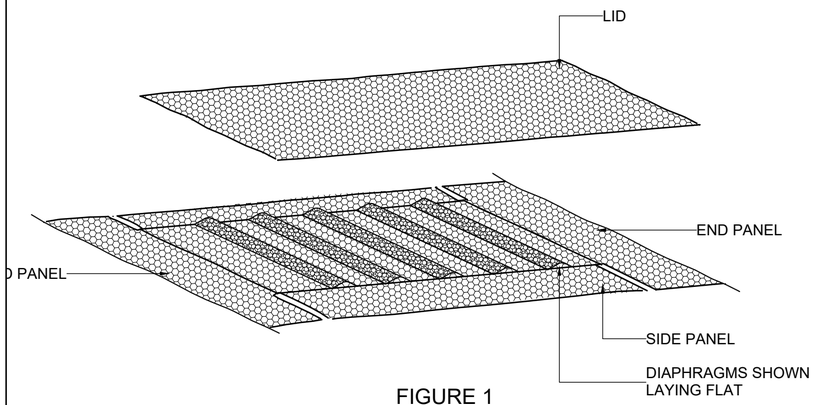

FIGURE 1

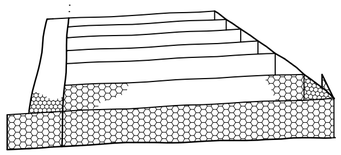

FIGURE 2

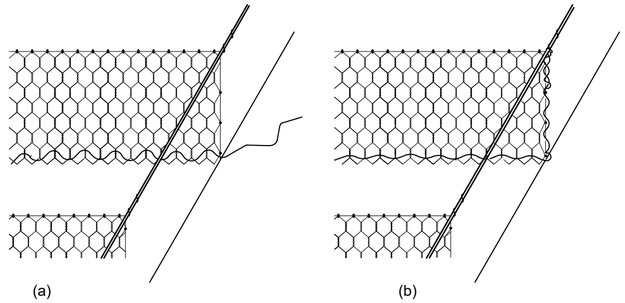

FIGURE 3

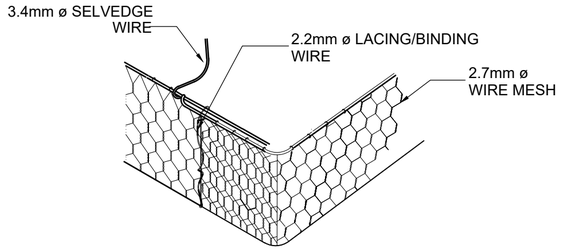

FIGURE 4

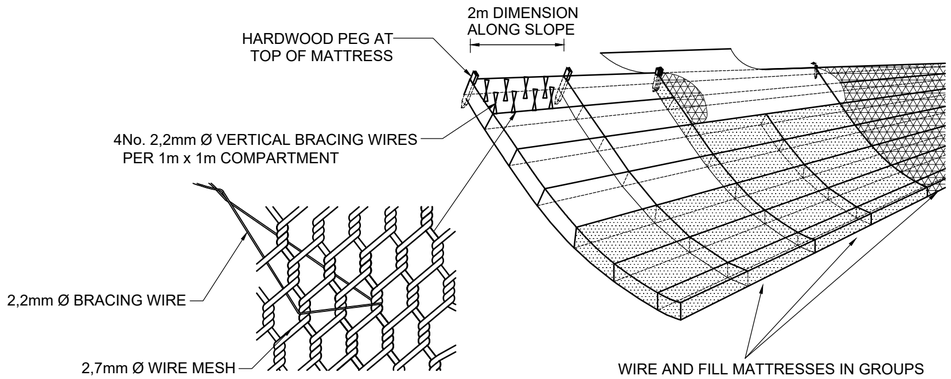

FIGURE 5

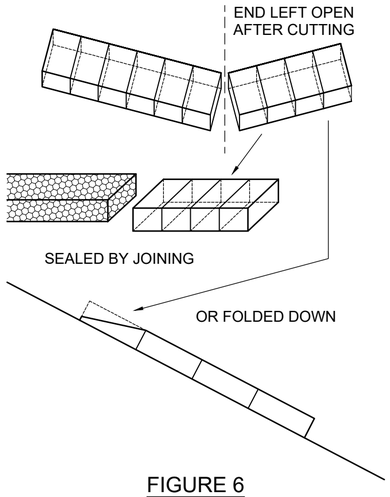

FIGURE 6

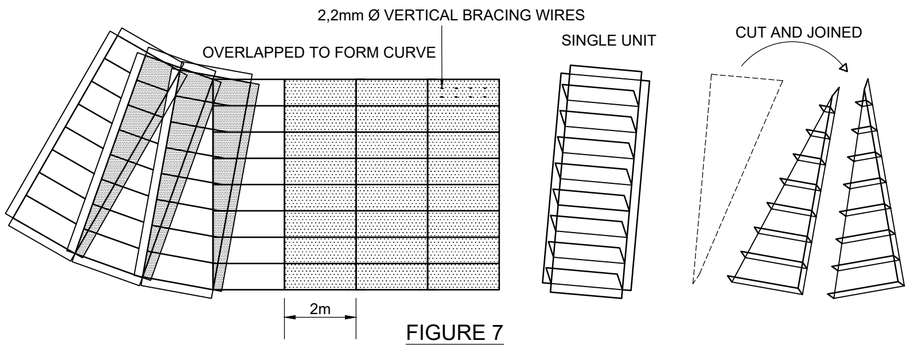

FIGURE 7

ASSEMBLY

1. UNFOLD EACH GABION (THE MATTRESS UNIT AND THE LID PANEL) ON A HARD FLAT SURFACE. STRETCH IT OUT AND STAMP OUT ANY UNNECESSARY CREASES (FIGURE 1).
2. FOLD THE SIDE AND END PANELS AS WELL AS THE INTERNAL DIAPHRAGMS INTO THE UPRIGHT POSITION. CHECK THAT BOTH SIDE PANELS MATCH THE DIAPHRAGM HEIGHT FIG.2). ATTACH THE DIAPHRAGMS FIRST TO THE SIDE PANELS BY LACING THE THICK SELVEDGE WIRE PROTRUDING FROM THE DIAPHRAGM CORNERS, FIRMLY OVER AND AROUND THE TOPS OF THE SIDE PANELS (FIGURE 3a). THEN PULL OUT THE ENDS OF THE HELICAL WIRE CONNECTING EACH DIAPHRAGM TO THE BOTTOM OF THE MATTRESS, AND USE THEM TO WIRE THE DIAPHRAGM ENDS TO THE SIDES (FIGURE 3b). ALL WIRING MUST BE DONE AS A CONTINUOUS LACING OPERATION, NOT WITH INDIVIDUAL WIRING MUST BE DONE AS A CONTINUOUS LACING OPERATION, NOT WITH INDIVIDUAL TWISTS AT INTERVALS. TIGHTNESS OF THE MESH AND WIRING IS ESSENTIAL AT ALL TIMES.
3. AT THE FOUR CORNERS, BEND THE PROJECTING LENGTHS OF THE END PANELS TO OVERLAP THE SIDE PANELS. ATTACH THE END PANELS FIRST TO THE SIDE PANELS BY LACING THE THICK SELVEDGE WIRE PROTRUDING FROM THE END PANEL CORNERS, FIRMLY AROUND THE TOPS OF THE SIDE PANELS. THEN LACE UP THE REST OF THE OVERLAP WITH BINDING WIRE (FIGURE 4). POKE ALL PROJECTING WIRE ENDS INWARDS IN ORDER TO PREVENT PUNCTURING AND TEARING OF THE FILTER CLOTH.
4. IN STREAM AND RIVER COURSES, DIAGRAMS ARE REQUIRED TO PROVIDE COMPARTMENTS OF 1m x 1m IN THE MATTRESSES.

FORMING THE STRUCTURE

1. THE SURFACE ON WHICH THE GABION MATTRESSES ARE TO BE CONSTRUCTED SHALL BE PREPARED TO THE SPECIFIED SLOPE AND LEVEL AS TO PRESENT AN EVEN SURFACE. AVOID DISTURBING THE PREPARED GROUND AND SAVE TIME BY ASSEMBLING THE MATTRESS UNITS NEAR TO, BUT NOT AT THE FINAL POSITION.

2. PRIOR TO FILLING, SEVERAL ASSEMBLED UNITS SHOULD BE PLACED IN POSITION AND WIRED TOGETHER BY CONTINUOUS LACING AROUND ADJACENT TOP EDGE SELVEDGES WITH SINGLE LOOPS AND DOUBLE LOOPS IN TURN AT 100mm INTERVALS. THE STRONG INTER-CONNECTION OF ALL UNITS IN A GABION STRUCTURE IS AN IMPORTANT FEATURE OF THE TECHNIQUE AND IT IS THEREFORE ESSENTIAL THAT THE WIRING IS SECURE.

3. ON SLOPES, THE MATTRESS SHOULD BE LAID WITH THE 2,0m DIMENSION ALONG THE SLOPE, NOT UP AND DOWN IT. WHEN THE MATTRESS IS LAID ON A SLOPE STEEPER THAN 1:1,5, IT SHOULD BE SECURED BY HARDWOOD PEGS DRIVEN INTO THE GROUND JUST BELOW THE UPPER END PANEL, AT 2,0m CENTRES (FIGURE 5).

4. WHERE GABION STRUCTURES WITH NON-RECTANGULAR SHAPES ARE SPECIFIED, MODIFICATION TO THE MATTRESSES ARE REQUIRED. OTHER DIMENSIONS, SHAPES, BEVELS AND MITRES SHOULD BE FORMED BY CUTTING AND FOLDING THE PANELS TO THE REQUIRED ANGLES AND SIZES. THE CUT EDGES OF THE MESH SHALL BE SECURELY LACED TOGETHER WITH LACING WIRE.

   4.1 MATTRESSES CAN BE SHORTENED BY CUTTING OFF A NUMBER OF COMPARTMENTS. THE OFF-CUT, WHICH HAS AN OPEN END, CAN BE USED IN TWO WAYS : BY WIRING IT DIRECTLY TO A WHOLE MATTRESS TO LENGTHEN IT; OR SEPARATELY AS A SHORT LENGTH TO FIT A PARTICULAR WIDTH NEEDED. IN THE LATTER CASE, THE OPEN END IS FINISHED AFTER FILLING, BY FOLDING THE SHORT SIDES AND THE TOP DOWN TO FORM A WEDGE SHAPE AND WIRING DOWN. ON SLOPES, THIS END SHOULD BE AT THE TOP (FIGURE 6).

   4.2 MATTRESSES CAN BE CUT IN TWO WAYS TO FIT CURVES : BY DIVIDING IT DIAGONALLY TO FORM TRIANGULAR SECTIONS AND THE OPEN SIDE OF ONE SECTION BUTT-JOINED TO THE INTACT SIDE OF THE NEXT SECTION; OR WHOLE UNASSEMBLED FLAT UNITS ARE PLACED IN SEQUENCE AND OVERLAPPED TO SUIT THE CURVE. IN THE CASE OF THE LATTER, THE SIDES OF THE UNITS LAYING ON TOP ARE RAISED AND THE DIAPHRAGMS ARE CUT ALONG THE LINES OF THESE SIDES AND PULLED UPRIGHT. ASSEMBLY THEN PROCEEDS AS NORMALLY (FIGURE 7).

ROCK FILLING

1. FILLING CAN BE DONE UNIT BY UNIT, BUT SEVERAL UNITS SHOULD BE READY FOR FILLING AT ANY ONE TIME. PLACE THE FILL MATERIAL, BY HAND OR MECHANICALLY, IN THE COMPARTMENT, STARTING AT THE BOTTOM IF ON A SLOPE.

2. FILLING MATERIAL SHOULD BE CLEANED. HARD UNWEATHERED BOULDERS OR ROCK FRAGMENTS. NO ROCK FRAGMENTS SHALL EXCEED THE MAXIMUM SIZE GIVEN IN TABLE 1 BELOW AND AT LEAST 85% OF THE ROCKS SHALL BE OF A SIZE EQUAL TO OR ABOVE THE AVERAGE LEAST DIMENSION GIVEN IN TABLE 1.

TABLE 1

DEPTH OF CAGE (m)	ROCK SIZE ACCORDING TO THE LARGEST DIMENSION OF ROCK	
	AVERAGE LEAST DIMENSION (mm)	MAXIMUM (mm)
0.2	125	150
0.3	125	200
0.5	125	250
1.0	125	250

3. LEVEL OFF THE FILL 25mm TO 50mm ABOVE THE TOP OF THE MESH TO ALLOW FOR SETTLEMENT.

4. ATTACH THE LIDS TO THE CORNERS OF THE MATTRESS BY MEANS OF THE THICK SELVEDGE WIRE PROTRUDING FROM THE LID CORNERS TO ENSURE THAT THERE IS ENOUGH MESH TO COVER THE WHOLE AREA. THEN SECURELY WIRE IT TO THE TOPS OF THE SIDES, ENDS AND DIAPHRAGMS, USING THE ALTERNATE SINGLE AND DOUBLE LOOPS. THE LONG SIDES SHOULD BE WIRED FIRST, FOLLOWED BY THE BOTTOM END, THE DIAPHRAGM PANELS AND FINALLY THE TOP END. WITH MORE THAN ONE MATTRESS FILLED, THE EDGES OF ADJACENT LIDS CAN BE WIRED DOWN IN THE SAME OPERATION. TIGHTNESS OF MESH, WELL POCKED FILLING AND SECURE LACING IS ESSENTIAL IN ALL STRUCTURES.

5. 4 No. VERTICAL 2,2mm Ø BRACING WIRES SHALL BE PROVIDED AT 330mm HORIZONTAL CENTRES PER 1m X 1m COMPARTMENT TO SECURELY TIE THE BOTTOM OF THE BOX AND THE LID TO ENSURE A NEAT FACE. THESE BRACING WIRES SHALL BE WRAPPED AROUND TWO MESH WIRES.

No.	DATE	ADDITIONS AND AMENDMENTS
0	OCT - 2023	ORIGINAL VERSION

STANDARD PLANS

WESTERN CAPE GOVERNMENT
DEPARTMENT OF INFRASTRUCTURE
TRANSPORT INFRASTRUCTURE BRANCH

GABIONS

ASSEMBLY AND ERECTION OF GABION MATTRESSES

SCALE : N.T.S.

A2 ORIGINAL

INDEX NO.
WCS/52/1/C2

PLAN NO.
SHEET 2 OF 2

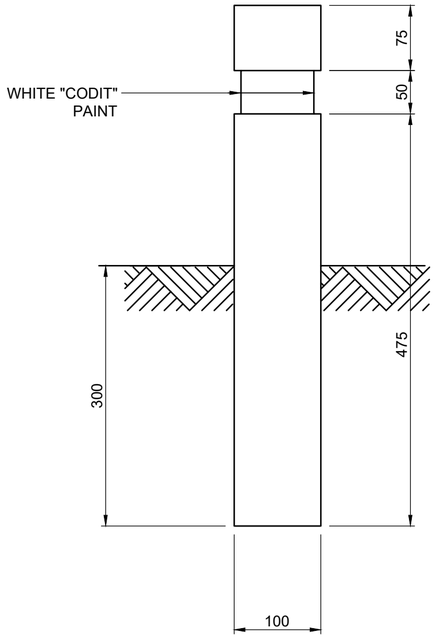

FRONT ELEVATION

SCALE 1:5

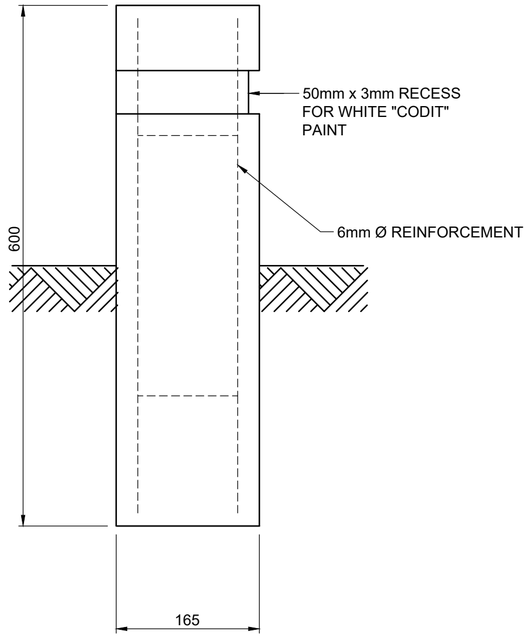

SIDE ELEVATION

SCALE 1:5

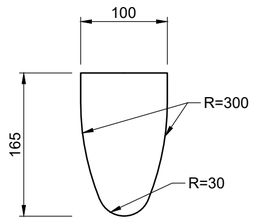

PLAN

SCALE 1:5

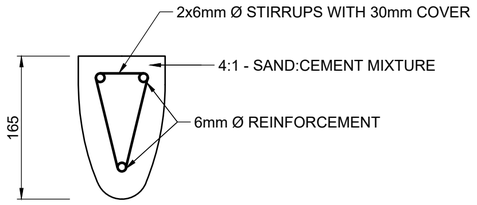

SECTION

SCALE 1:5

TABLE A	
SPACING OF GUIDE BLOCKS IN CURVES	
RADIUS	SPACING
<150m	25m
150m - 300m	50m
300m - 1500m	100m
>1500m	200m

NOTES:

1. ALL REINFORCEMENT TO BE SPOTWELDED.
2. THE UPPER 300mm OF THE GUIDE BLOCK, EXCLUDING THE 50mm x 50mm RECESS, MUST BE PAINTED WHITE.
3. SPACING OF GUIDE BLOCKS ON STRAIGHTS IS 5000mm AND 2000mm ON CURVES.

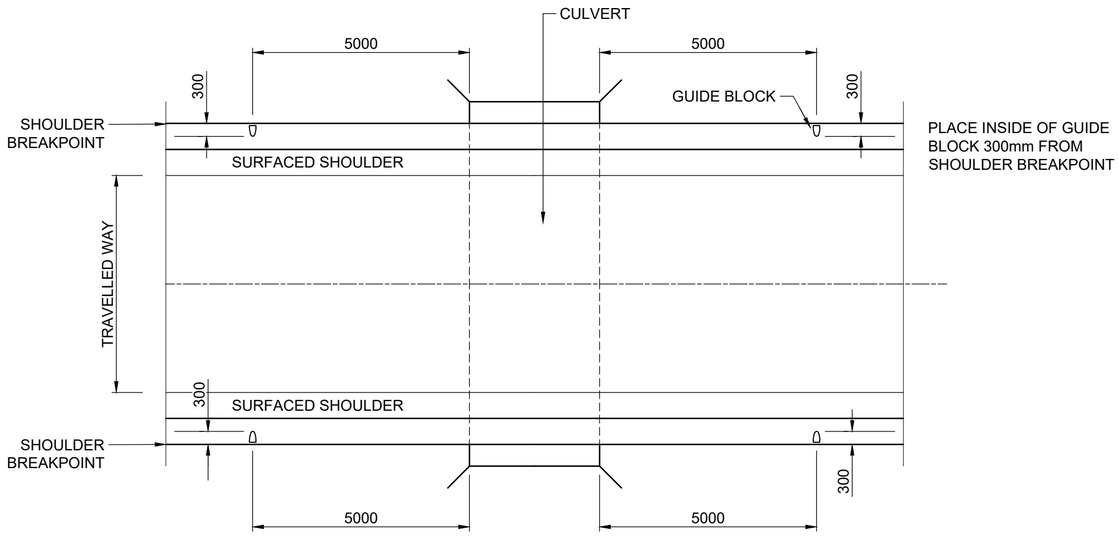

POSITIONING OF GUIDE BLOCKS AT CULVERTS

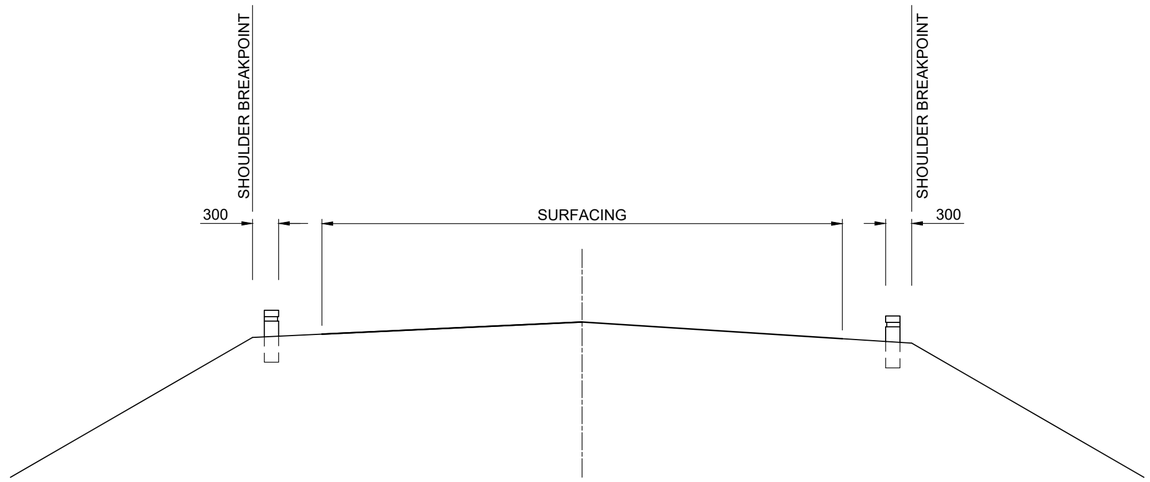

CROSS SECTION OF POSITIONING OF GUIDE BLOCKS

No.	DATE	ADDITIONS AND AMENDMENTS
0	OCT - 2023	ORIGINAL VERSION

STANDARD PLANS

WESTERN CAPE GOVERNMENT
DEPARTMENT OF INFRASTRUCTURE
TRANSPORT INFRASTRUCTURE BRANCH

GUIDE BLOCKS

DETAIL OF GUIDE BLOCKS

SCALE : N.T.S.

A2 ORIGINAL

INDEX NO.
WCS/53/1/C1

PLAN NO.
SHEET 1 OF 1

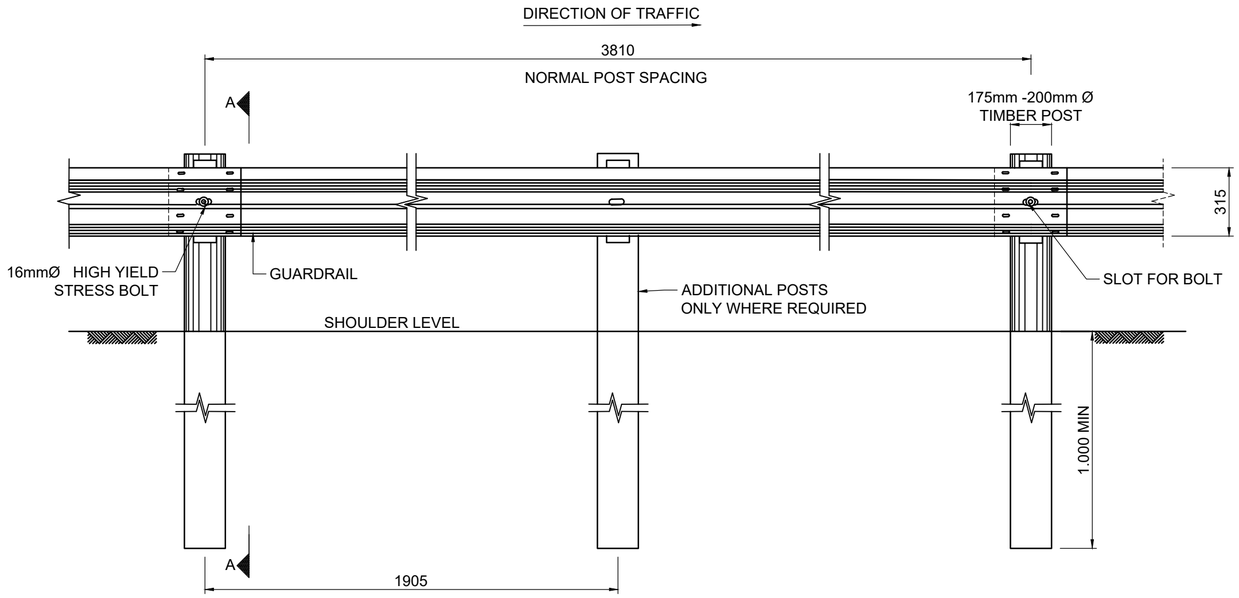

FRONT ELEVATION

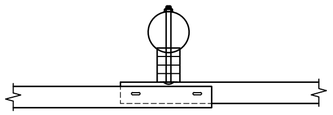

DETAIL 1

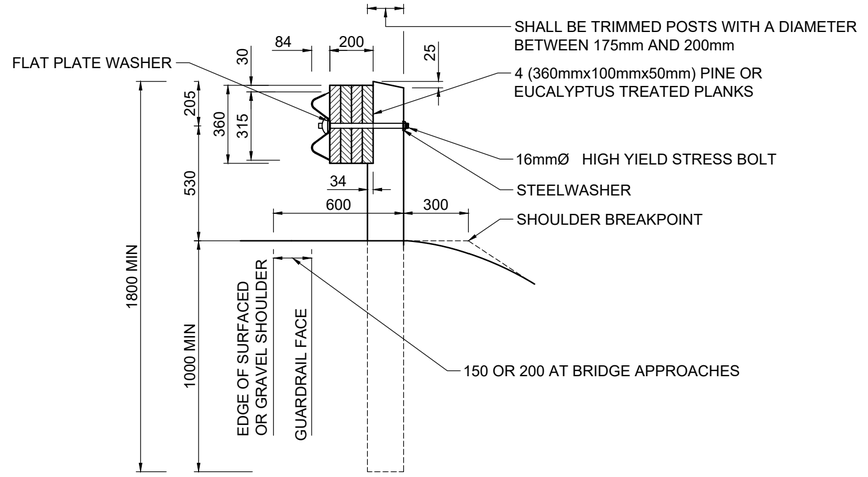

SECTION A-A

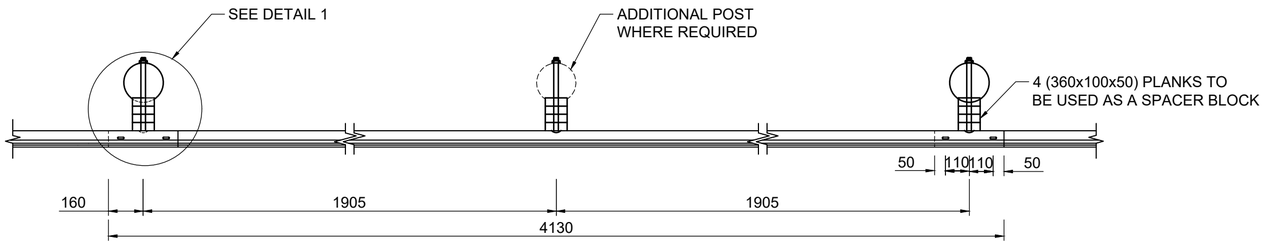

PLAN

NOTES :
1. TYPE D1 GUARDRAIL DELINEATORS AT MAXIMUM 30,48m c/c (REFER TO DWG No WCS/54/1/C7)
2. ON ROADS WITH GRAVEL SHOULDERS THE POSITION OF THE GUARDRAIL SHALL BE SET OUT FROM THE S.B.P.

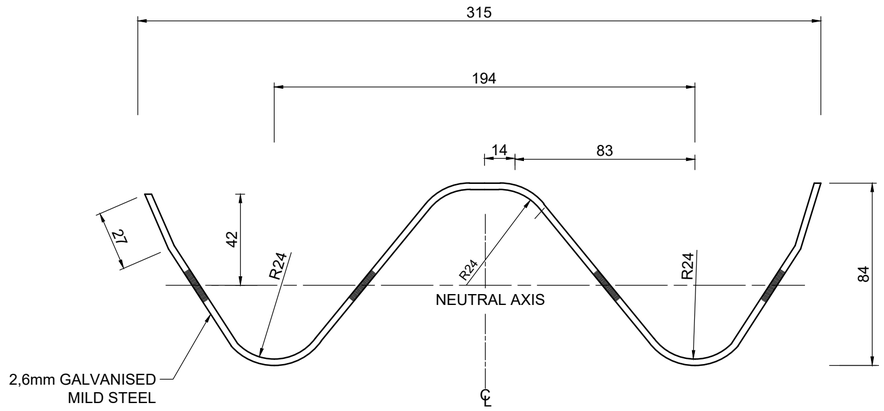

SECTION THROUGH GUARDRAIL

No.	DATE	ADDITIONS AND AMENDMENTS
0	OCT - 2023	ORIGINAL VERSION

STANDARD PLANS

WESTERN CAPE GOVERNMENT
DEPARTMENT OF INFRASTRUCTURE
TRANSPORT INFRASTRUCTURE BRANCH

GUARDRAILS

GENERAL DETAILS OF GUARDRAILS

SCALE : N.T.S.

A2 ORIGINAL

INDEX NO.
WCS/54/1/C1

PLAN NO.
SHEET 1 OF 7

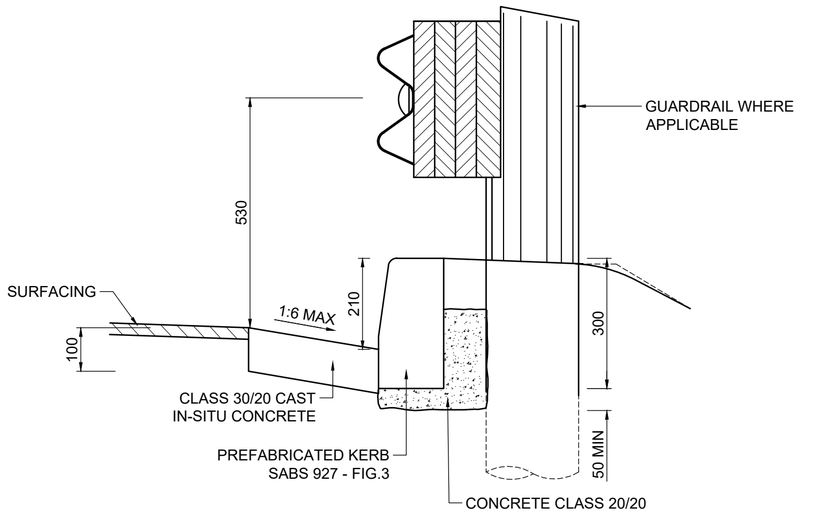

CONCRETE KERBING-CHANNELLING
COMBINATION (TYPE 3B)

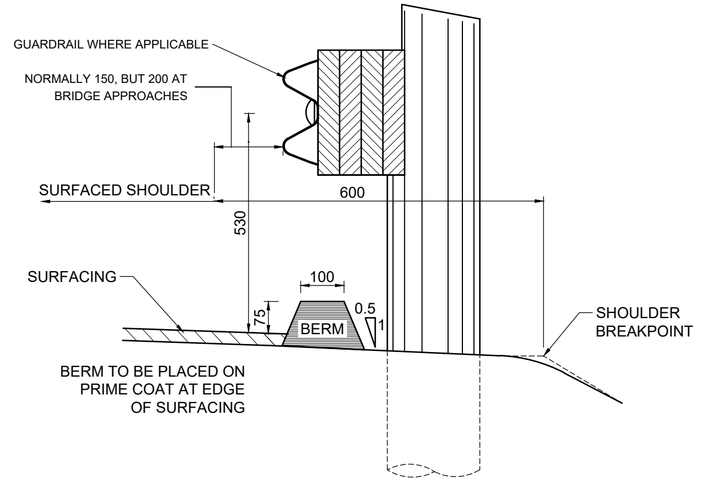

ASPHALT BERM

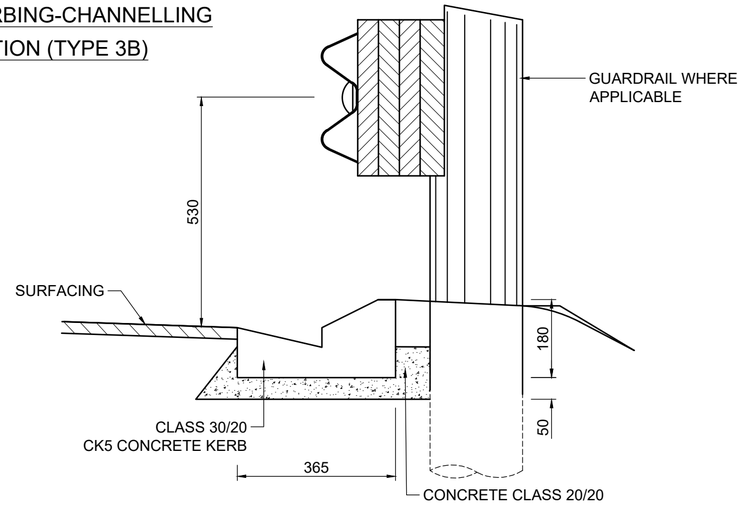

PRECAST CONCRETE BERM

No.	DATE	ADDITIONS AND AMENDMENTS
0	OCT - 2023	ORIGINAL VERSION

STANDARD PLANS

WESTERN CAPE GOVERNMENT
DEPARTMENT OF INFRASTRUCTURE
TRANSPORT INFRASTRUCTURE BRANCH

GUARDRAILS

POSITIONING OF SIDE DRAIN AND ASPHALT BERM AT GUARDRAILS

SCALE : N.T.S.

A2 ORIGINAL

INDEX NO.
WCS/54/1/C2

PLAN NO.
SHEET 2 OF 7

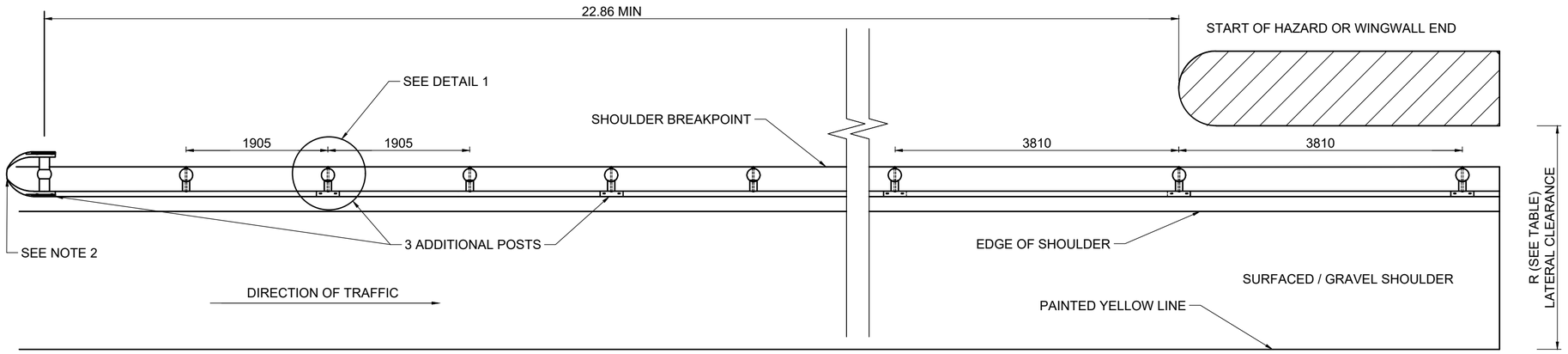

TERMINAL: APPROACH END

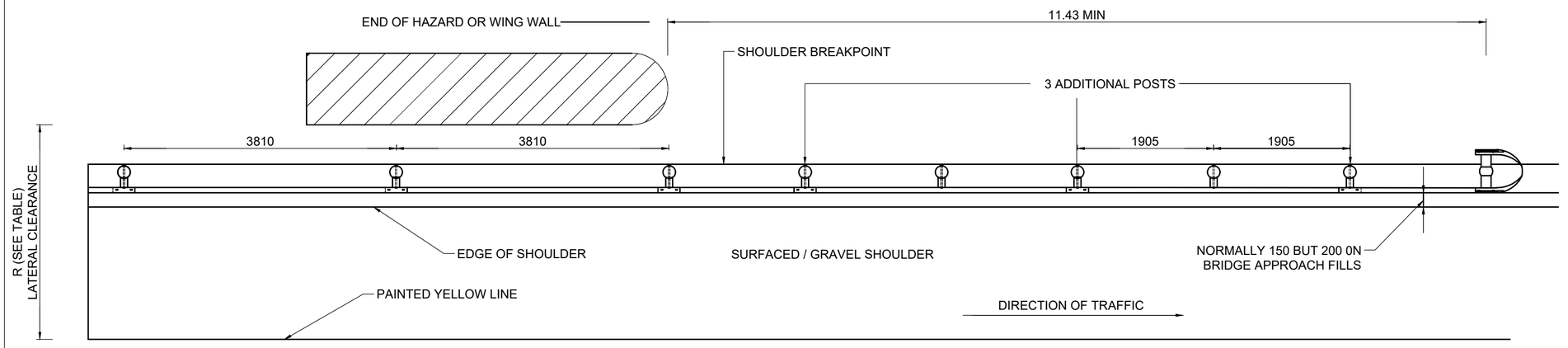

TERMINAL: DEPARTURE END

TABLE	
LATERAL CLEARANCE (R)	POST SPACING
> 2,5m 1,0m - 2,5m <1,0m	3,810m 1,905m SEE NOTE 1

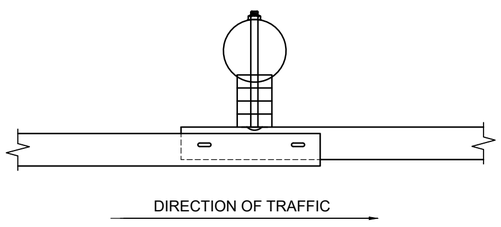

DETAIL 1

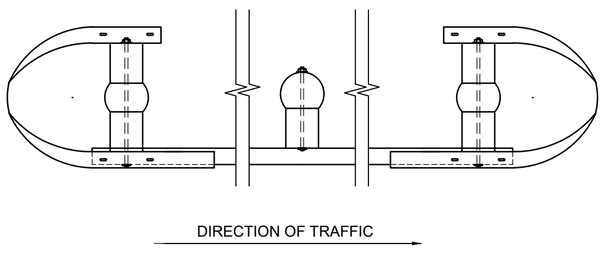

DETAIL OF GUARDRAIL END TREATMENTS

NOTES:

1. NEW JERSEY TYPE BARRIER OR AS ORDERED BY ENGINEER.
2. FOR TERMINATION OF EXP0SED GUARDRAIL USE STANDARD BULLNOSE. REFER TO DWG. No. WCS/54/1/C7

No.	DATE	ADDITIONS AND AMENDMENTS
0	OCT - 2023	ORIGINAL VERSION

STANDARD PLANS

WESTERN CAPE GOVERNMENT
DEPARTMENT OF INFRASTRUCTURE
TRANSPORT INFRASTRUCTURE BRANCH

GUARDRAILS

GUARDRAILS AT HAZARDS

SCALE : N.T.S.

A2 ORIGINAL

INDEX NO.
WCS/54/1/C3

PLAN NO.
SHEET 3 OF 7

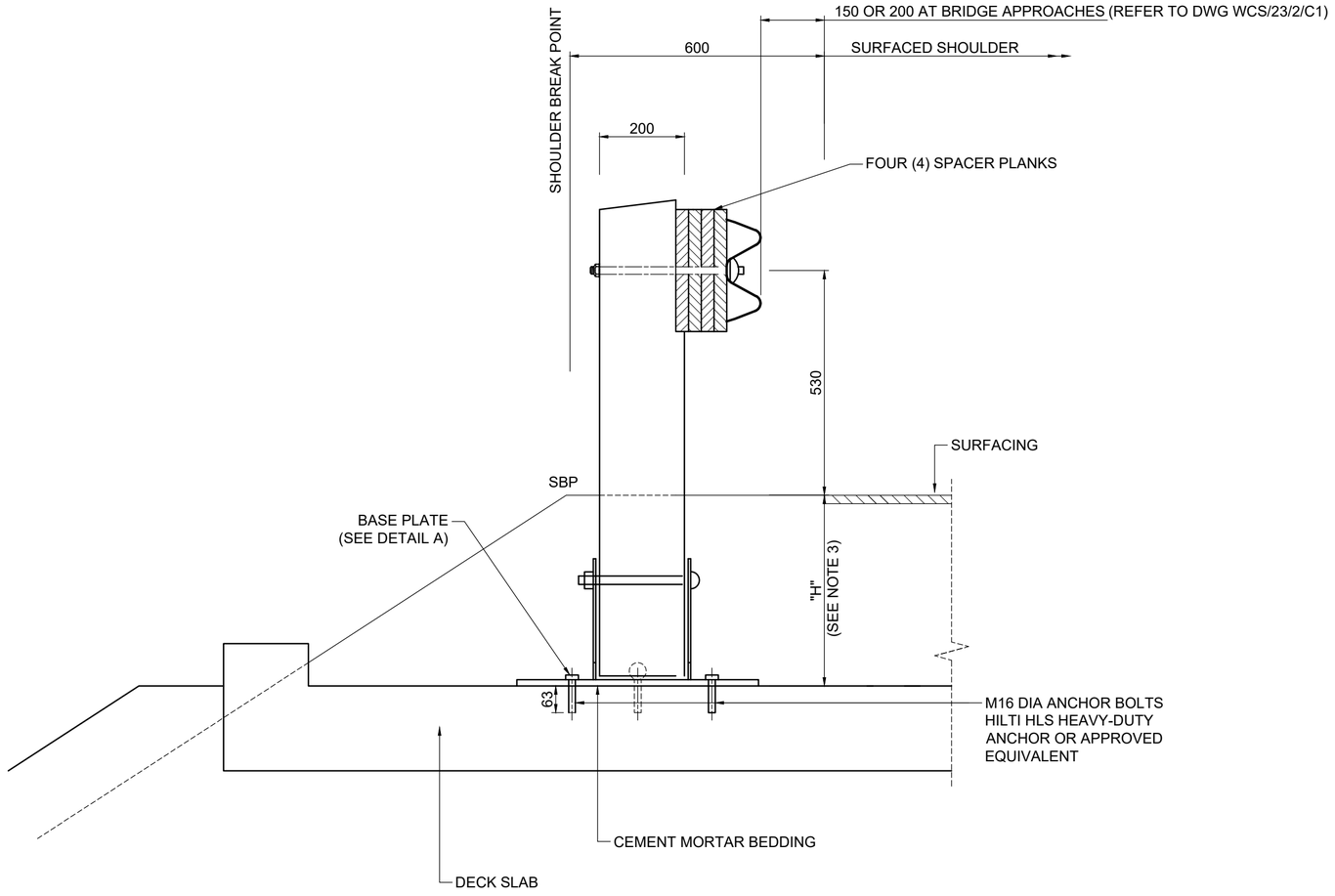

SECTION AT STRUCTURE
SCALE 1:10

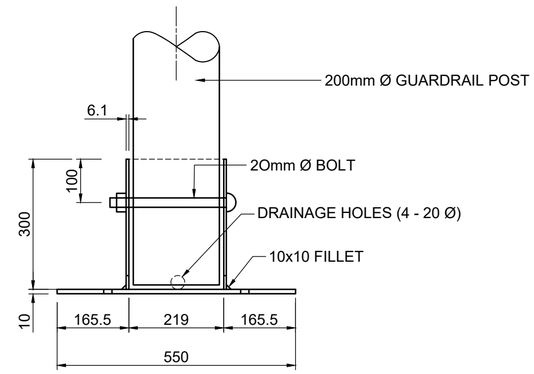

SECTION X-X

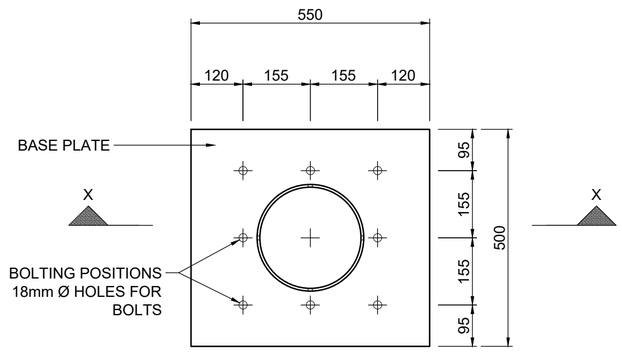

DETAIL A
SCALE 1:10

NOTES:

1. ALL STEEL AND WELDING TO COMPLY WITH SECTION 6700 OF COLTO STANDARD SPECIFICATION.
2. POST AND BASE FRAME SHALL BE HOT-DIP GALVANIZED WITH A 85 MICRON COATING IN ACCORDANCE WITH SANS 121.
3. THIS DETAIL IS APPLICABLE WHERE "H" < 1,0m.

No.	DATE	ADDITIONS AND AMENDMENTS
0	OCT - 2023	ORIGINAL VERSION

STANDARD PLANS

WESTERN CAPE GOVERNMENT
DEPARTMENT OF INFRASTRUCTURE
TRANSPORT INFRASTRUCTURE BRANCH

GUARDRAILS

GUARDRAIL ON CULVERTS

SCALE : N.T.S.

A2 ORIGINAL

INDEX NO.
WCS/54/1/C4

PLAN NO.
SHEET 4 OF 7

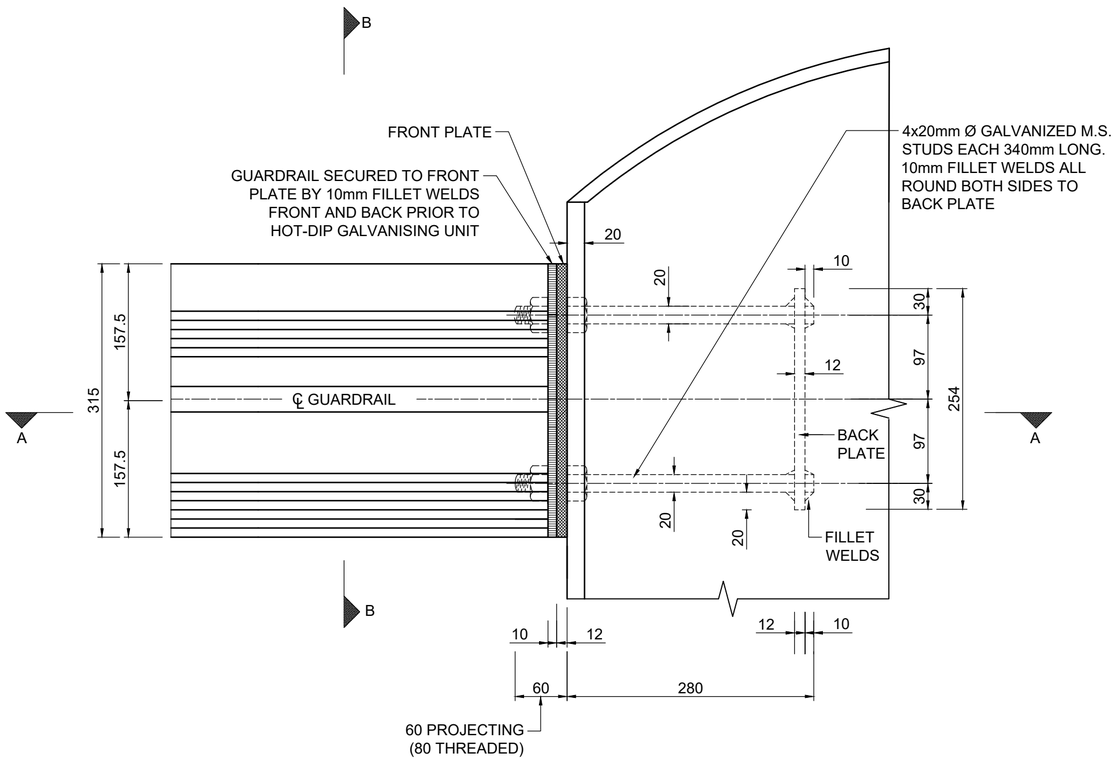

ELEVATION

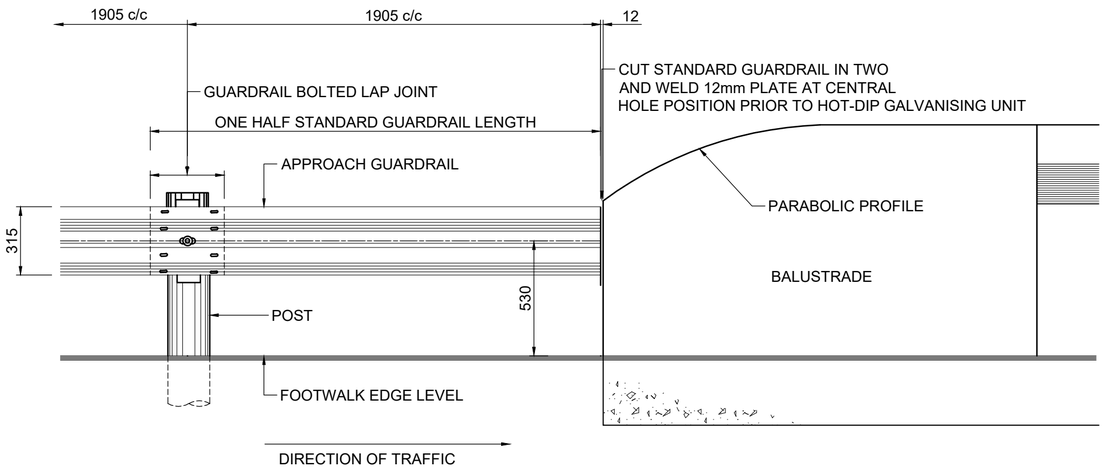

INSIDE ELEVATION OF BALUSTRADE

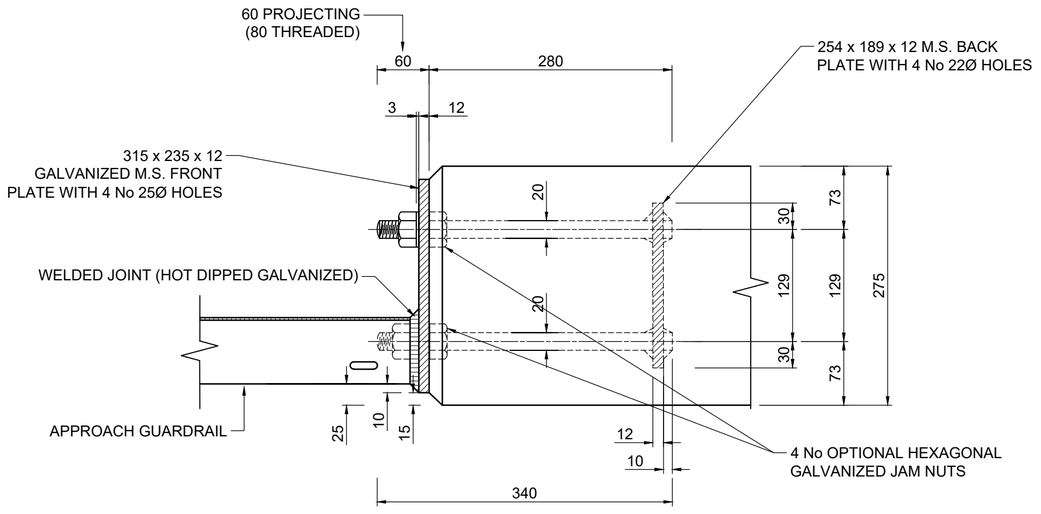

SECTION A-A

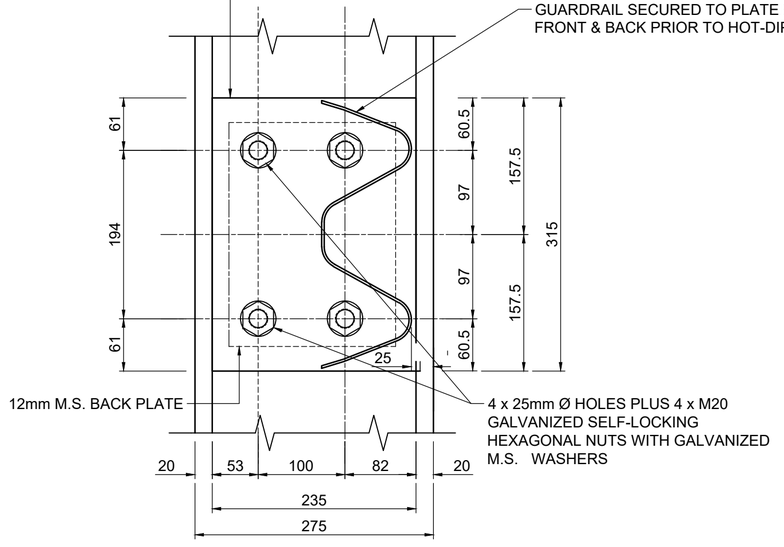

SECTION B-B

No.	DATE	ADDITIONS AND AMENDMENTS
0	OCT - 2023	ORIGINAL VERSION

STANDARD PLANS

WESTERN CAPE GOVERNMENT
DEPARTMENT OF INFRASTRUCTURE
TRANSPORT INFRASTRUCTURE BRANCH

GUARDRAILS

GUARDRAIL ATTACHMENT AT BALUSTRADES

SCALE : N.T.S.

A2 ORIGINAL

INDEX NO. WCS/54/1/C5

PLAN NO. SHEET 5 OF 7

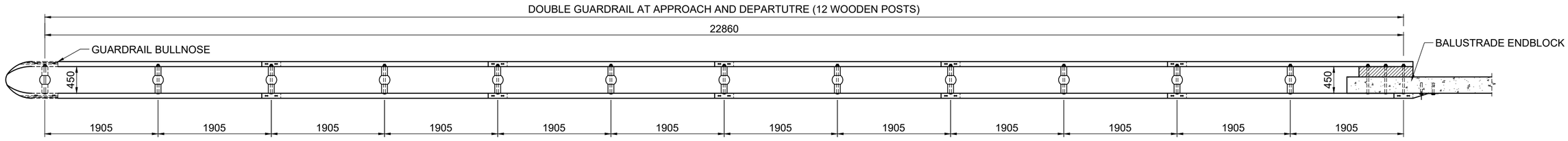

PLAN OF GUARDRAIL APPROACH AND DEPARTURE

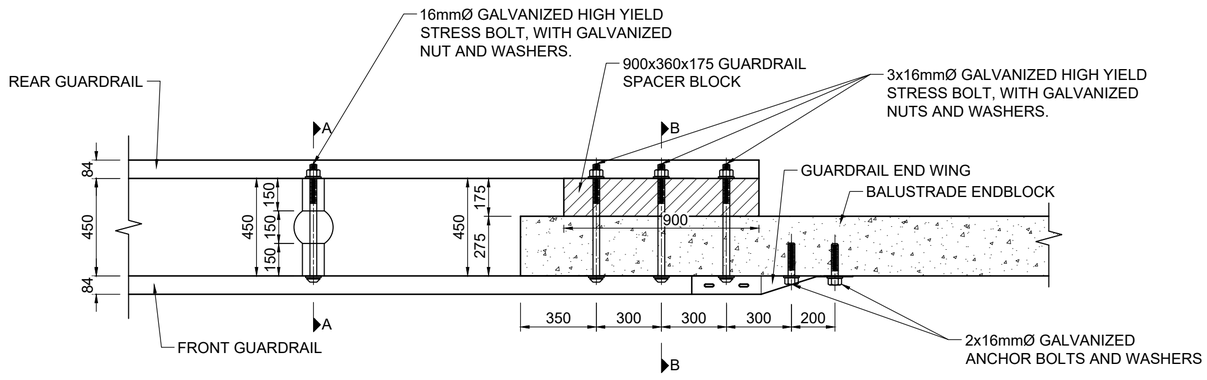

PLAN OF GUARDRAIL CONNECTION

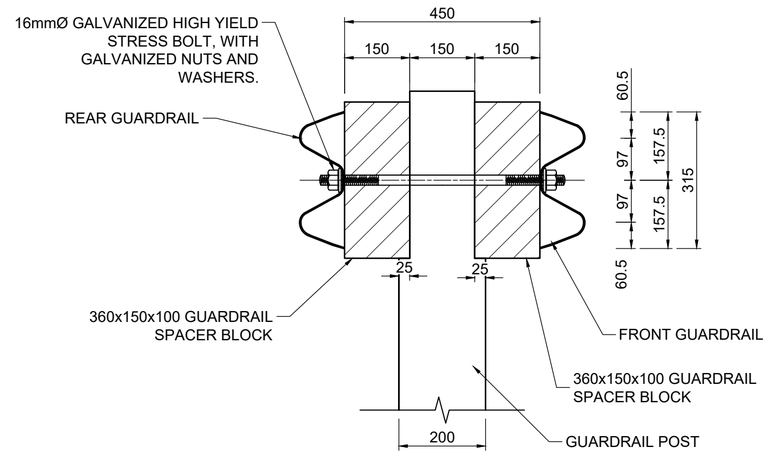

SECTION A-A

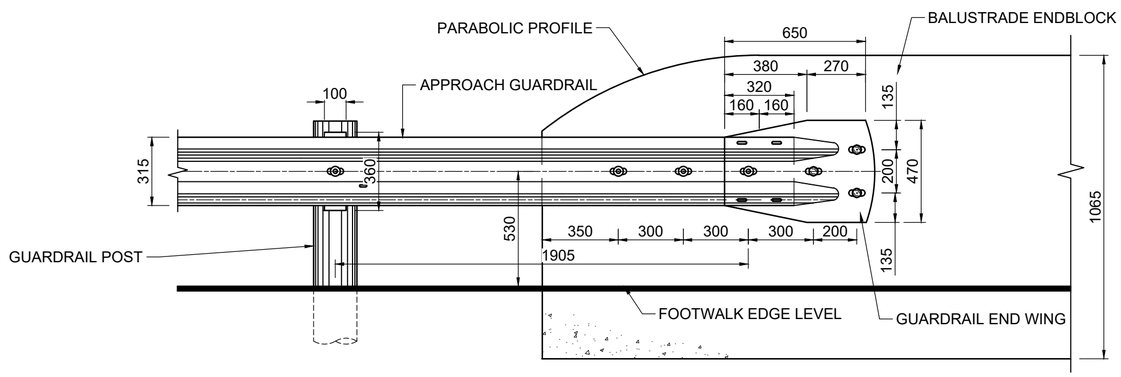

INSIDE ELEVATION OF BALUSTRADE

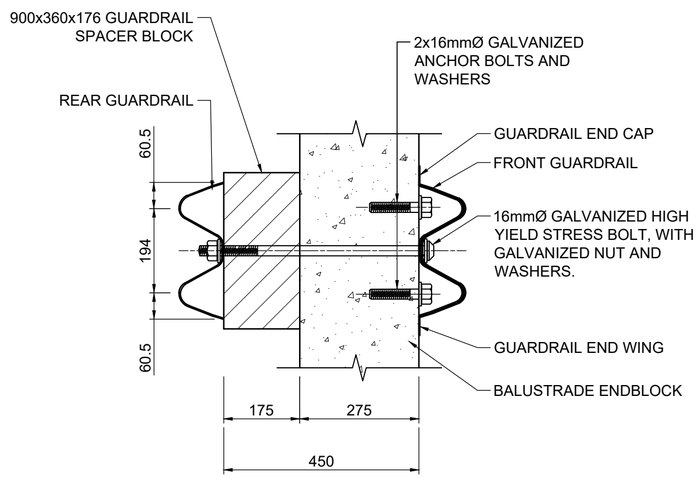

SECTION B-B

No.	DATE	ADDITIONS AND AMENDMENTS
0	OCT - 2023	ORIGINAL VERSION

STANDARD PLANS

WESTERN CAPE GOVERNMENT
DEPARTMENT OF INFRASTRUCTURE
TRANSPORT INFRASTRUCTURE BRANCH

GUARDRAILS

ALTERNATIVE GUARDRAIL ATTACHMENT AT BALUSTRADES

SCALE : N.T.S.

A2 ORIGINAL

INDEX NO.
WCS/54/1/C6

PLAN NO.
SHEET 6 OF 7

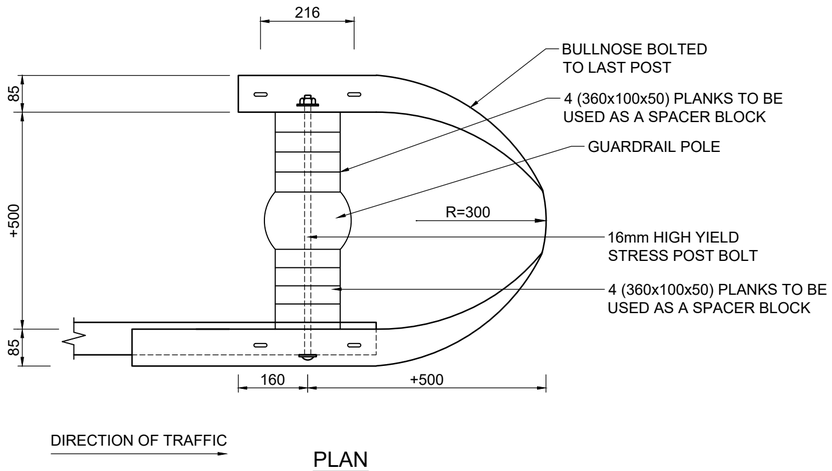

PLAN

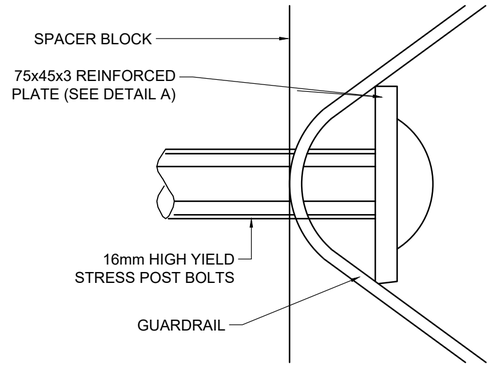

REINFORCING PLATE DETAIL

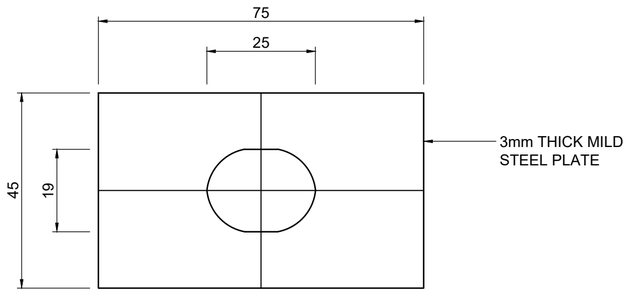

DETAIL A

DETAIL OF BULLNOSE

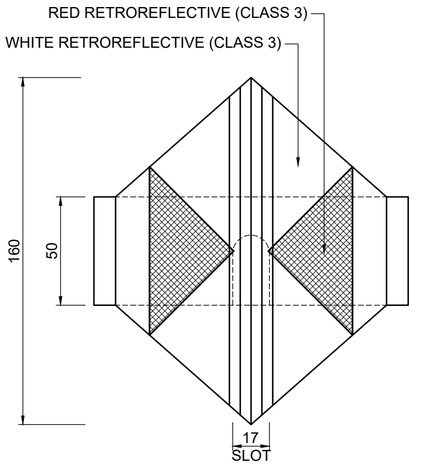

FRONT ELEVATION: TYPE D1(A)

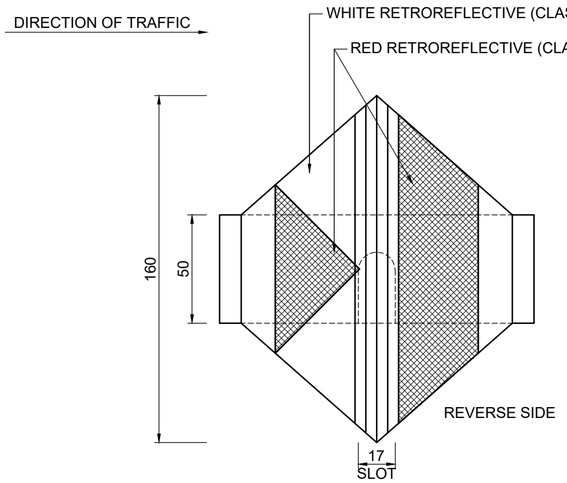

FRONT ELEVATION: TYPE D1(B)
(ON RAMPS)

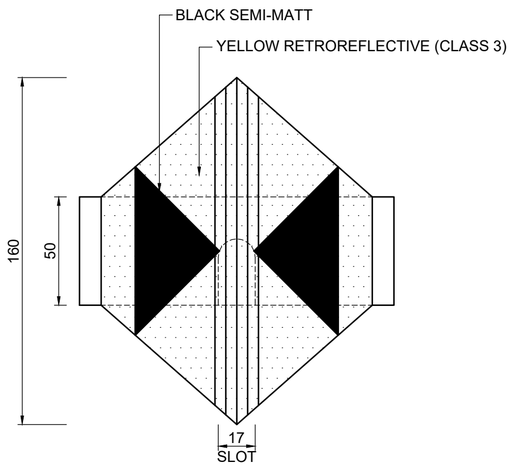

FRONT ELEVATION: TYPE TD1
(ON TEMPORARY DEVIATIONS)

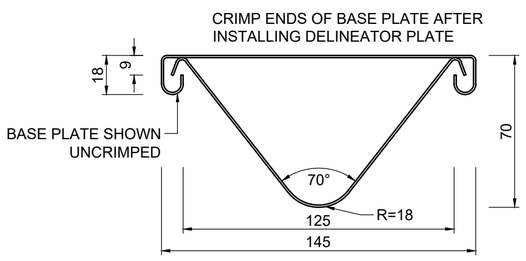

SECTIONAL PLAN

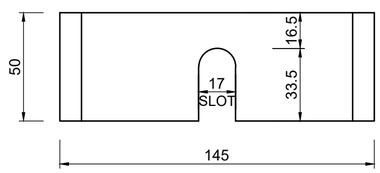

DETAIL OF BASE PLATE

NOTES :

1. TYPE D1(A) DELINEATORS ARE USED ON UNDIVIDED TWO WAY ROADS.
2. FOR NORMAL APPLICATIONS THE GUARDRAIL DELINEATOR SHOULD BE THE SAME COLOUR.
3. WHERE WRONG WAY TRAVEL, SUCH AS FREEWAY OFFRAMPS, MIGHT OCCUR, THE REVERSE SIDE OF THE DELINEATORS SHALL BE COVERED WITH RED RETRO-REFLECTIVE MATERIAL.
4. PERMANENT GUARDRAIL DELINEATORS SHALL BE SPACED AT A MAX. OF FOUR STANDARD 7,62m GUARDRAIL SECTIONS.
5. TEMPORARY GUARDRAIL DELINEATORS SHALL BE SPACED AT A MAX. OF TWO STANDARD 7,62m GUARDRAIL SECTIONS.
6. CLASS 3 RETROREFLECTIVE MAY BE CONSIDERED IF SPECIFIED BY ENGINEER.

DETAIL OF GUARDRAIL DELINEATORS

No.	DATE	ADDITIONS AND AMENDMENTS
0	OCT - 2023	ORIGINAL VERSION

STANDARD PLANS

WESTERN CAPE GOVERNMENT
DEPARTMENT OF INFRASTRUCTURE
TRANSPORT INFRASTRUCTURE BRANCH

GUARDRAILS

DETAILS OF BULLNOSE AND GUARDRAIL DELINEATORS

SCALE : N.T.S.

A2 ORIGINAL

INDEX NO.
WCS/54/1/C7

PLAN NO.
SHEET 7 OF 7

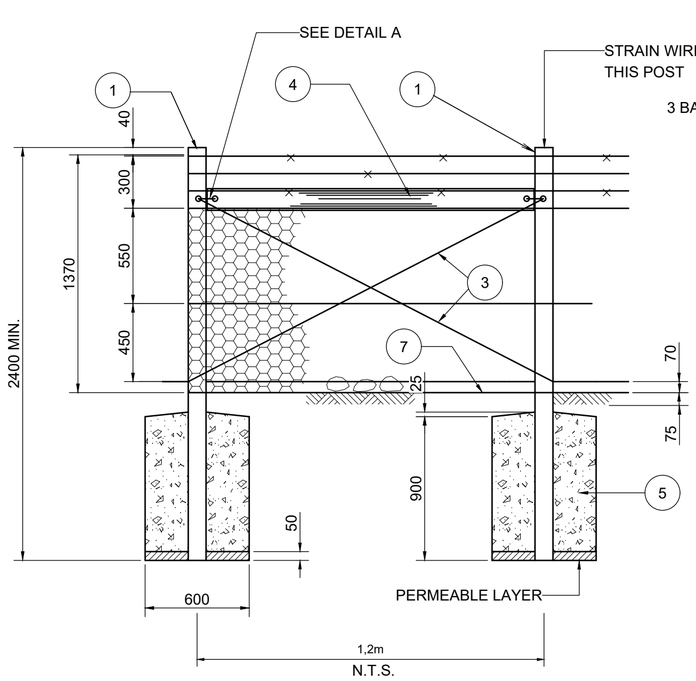

CORNER AND STRAINING POST
(280m MAX SPACING IN SOFT GROUND)
(420m MAX SPACING IN HARD GROUND)

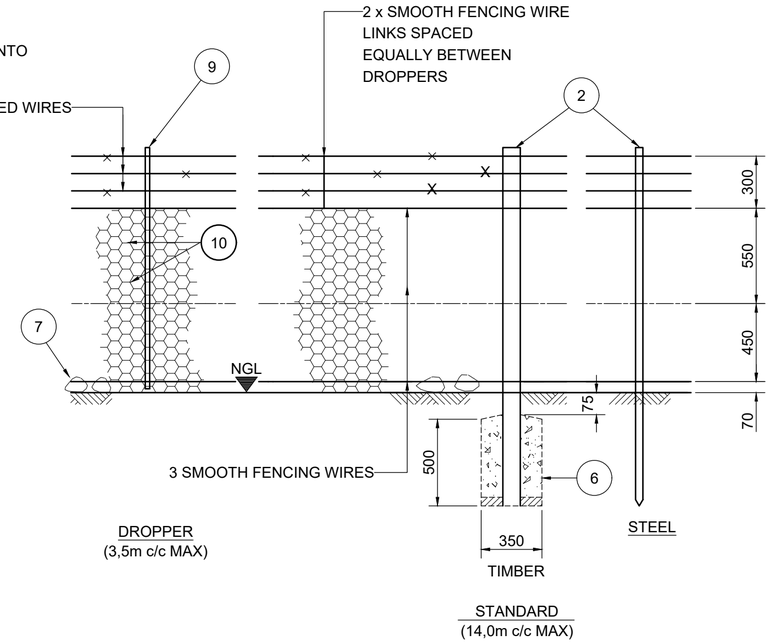

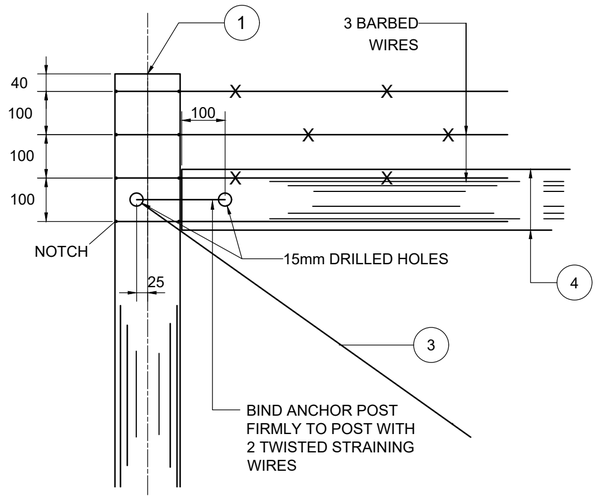

DETAIL A
SCALE 1:10

GENERAL DETAILS OF FENCING
SCALE 1:25

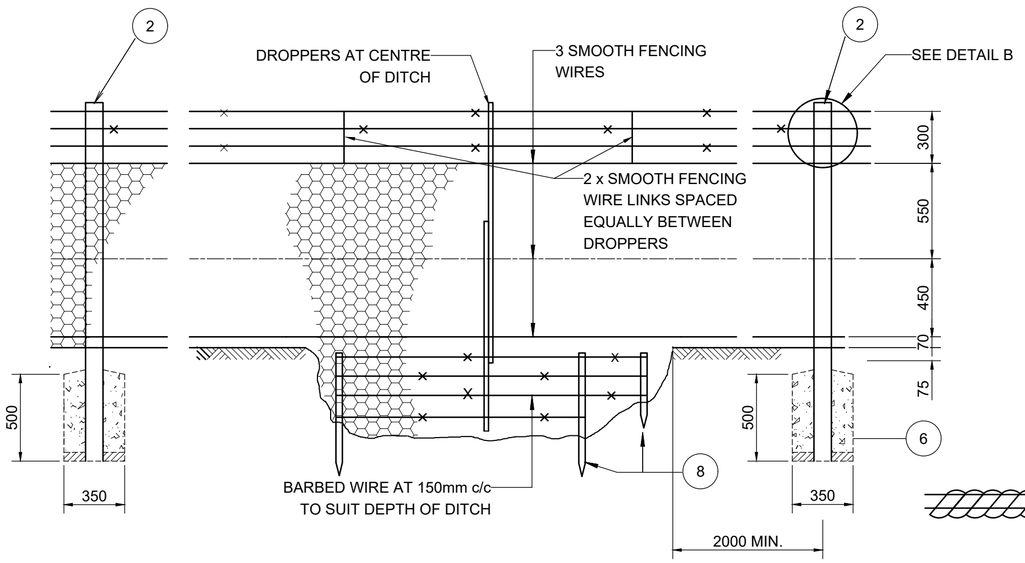

STANDARD

ACROSS CHANNELS & TRENCHES

STANDARD

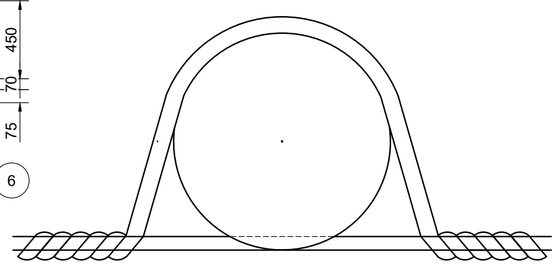

DETAIL B
SCALE 1:2

LEGEND

1. 125-150 TOP Ø TREATED TIMBER POLE 2400mm LONG
2. 100-125 TOP Ø TREATED TIMBER POLE 2000mm LONG OR 2,5 kg/m Y STEEL STANDARD
3. 100-125 TOP Ø TREATED TIMBER POLE 2000mm LONG OR 2,5 kg/m Y STEEL STANDARD
4. ANCHOR POST. 100-125 TOP Ø TREATED TIMBER POLE APPROX. 1200 LONG SEE DETAIL A
5. CLASS 20/20 CONCRETE
6. STANDARDS EMBEDDED IN CLASS 20/20 CONCRETE IF ORDERED BY THE ENGINEER
7. NATURAL GROUND LEVEL AT FOOT OF FENCE TO BE PACKED WITH STONE
8. STAKES (DROPPER PROFILE) OF SUITABLE LENGTH DRIVEN FIRMLY INTO SIDES & BED OF TRENCH AT APPROVED SPACINGS AND TIED TO AT LEAST TWO FENCE WIRES. STAKES TO BE ALIGNED WITH & TIED TO DROPPERS WITH WIRE WHERE REQUIRED
9. 0,56Kg/m RIDGEBACK PATTERN DROPPER OR 40 Ø TREATED TIMBER DROPPER
10. 75mm HEXAGONAL WIRE NETTING OF 1,8mm Ø GALVANIZED MILD STEEL 1200 WIDE

NGL NATURAL GROUND LEVEL

NOTES :
1. NOTCHES REQUIRED FOR CORNER POSTS, STRAINING POSTS, STANDARDS AND DROPPERS
2. THIS DRAWING IS TO BE READ IN CONJUNCTION WITH SECTION 5500 OF COLTO STANDARD SPECIFICATION FOR ROAD AND BRIDGE WORKS.

No.	DATE	ADDITIONS AND AMENDMENTS
0	OCT - 2023	ORIGINAL VERSION

STANDARD PLANS

WESTERN CAPE GOVERNMENT
DEPARTMENT OF INFRASTRUCTURE
TRANSPORT INFRASTRUCTURE BRANCH

FENCING

DETAIL OF VERMIN PROOF FENCING

SCALE : N.T.S.

A2 ORIGINAL

INDEX NO.
WCS/55/1/C1

PLAN NO.
SHEET 1 OF 8

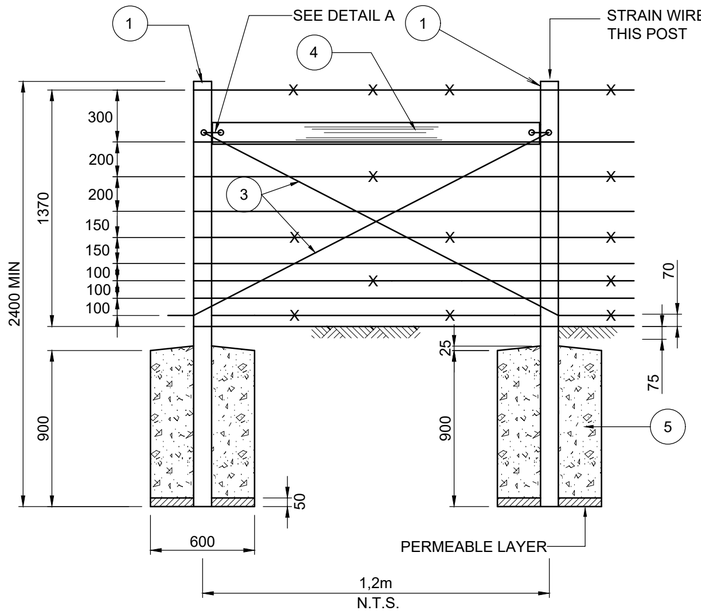

CORNER AND STRAINING POST
(280m MAX SPACING IN SOFT GROUND)
(420m MAX SPACING IN HARD GROUND)

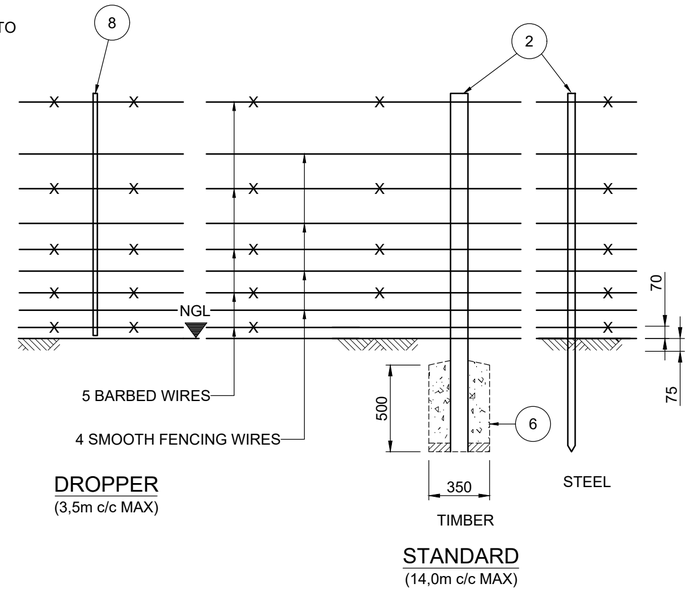

DROPPER
(3,5m c/c MAX)

STANDARD
(14,0m c/c MAX)

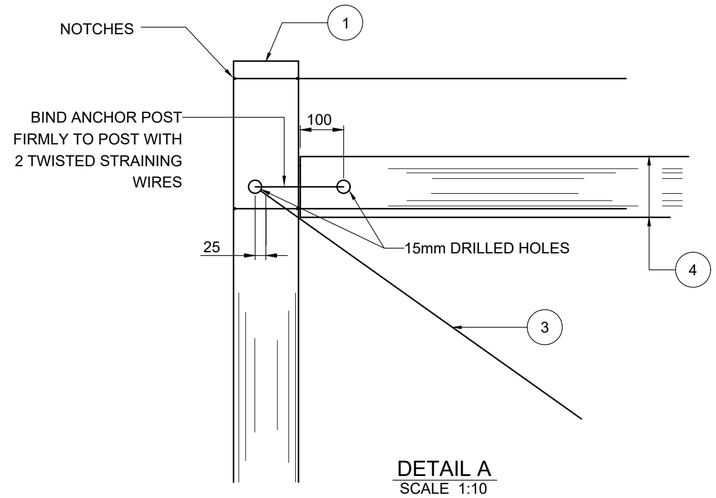

DETAIL A
SCALE 1:10

GENERAL DETAILS OF FENCING
SCALE 1:25

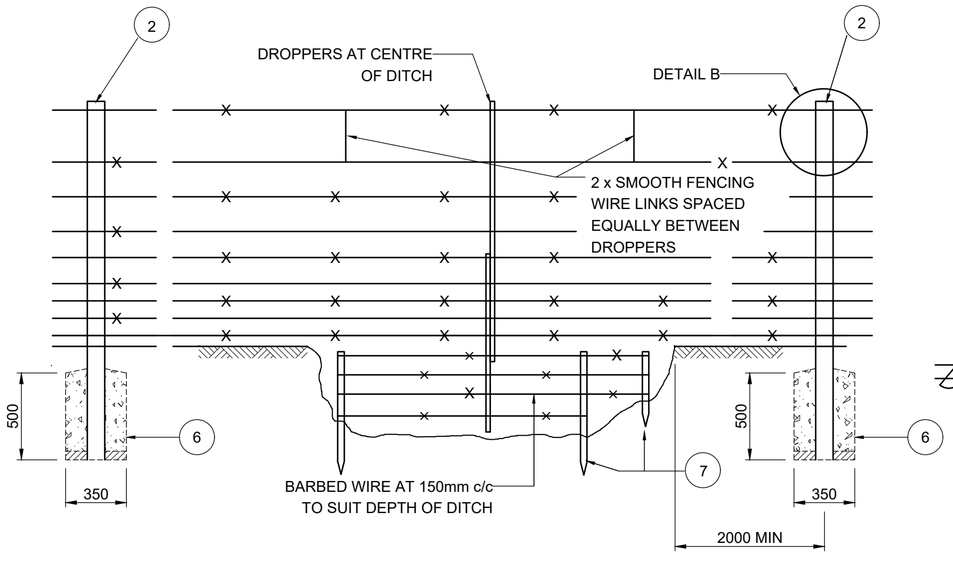

STANDARD

STANDARD

ACROSS CHANNELS & TRENCHES

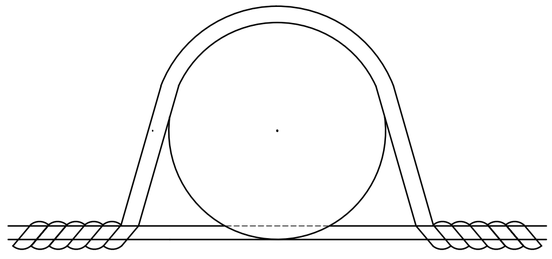

DETAIL B
SCALE 1:2

LEGEND

1. 125-150 TOP Ø TREATED TIMBER POLE 2400mm LONG
2. 100-125 TOP Ø TREATED TIMBER POLE 2000mm LONG OR 2,5 kg/m Y STEEL STANDARD
3. 4-CORD STRAINING WIRE
4. ANCHOR POST. 100-125 TOP Ø TREATED TIMBER POLE APPROX. 1200 LONG. SEE DETAIL A
5. CLASS 20/20 CONCRETE
6. STANDARDS EMBEDDED IN CLASS 20/20 CONCRETE IF ORDERED BY THE ENGINEER
7. STAKES (DROPPER PROFILE) OF SUITABLE LENGTH DRIVEN FIRMLY INTO SIDES & BED OF TRENCH AT APPROVED SPACINGS. STAKES TO BE ALIGNED WITH & TIED TO DROPPERS WITH WIRE WHERE REQUIRED
8. 0,56kg/m RIDGEBACK PATTERN DROPPER OR 40 Ø TREATED TIMBER DROPPER

NGL — NATURAL GROUND LEVEL

NOTES :
1. NOTCHES REQUIRED FOR CORNER POSTS, STRAINING POSTS, STANDARDS AND DROPPERS
2. THIS DRAWING TO BE READ IN CONJUNCTION WITH SECTION 5500 OF COLTO STANDARD SPECIFICATIONS FOR ROAD AND BRIDGE WORK.

No.	DATE	ADDITIONS AND AMENDMENTS
0	OCT - 2023	ORIGINAL VERSION

STANDARD PLANS

WESTERN CAPE GOVERNMENT
DEPARTMENT OF INFRASTRUCTURE
TRANSPORT INFRASTRUCTURE BRANCH

FENCING

DETAIL OF STOCK PROOF FENCING

SCALE : N.T.S.

A2 ORIGINAL

INDEX NO.
WCS/55/1/C2

PLAN NO.
SHEET 2 OF 8

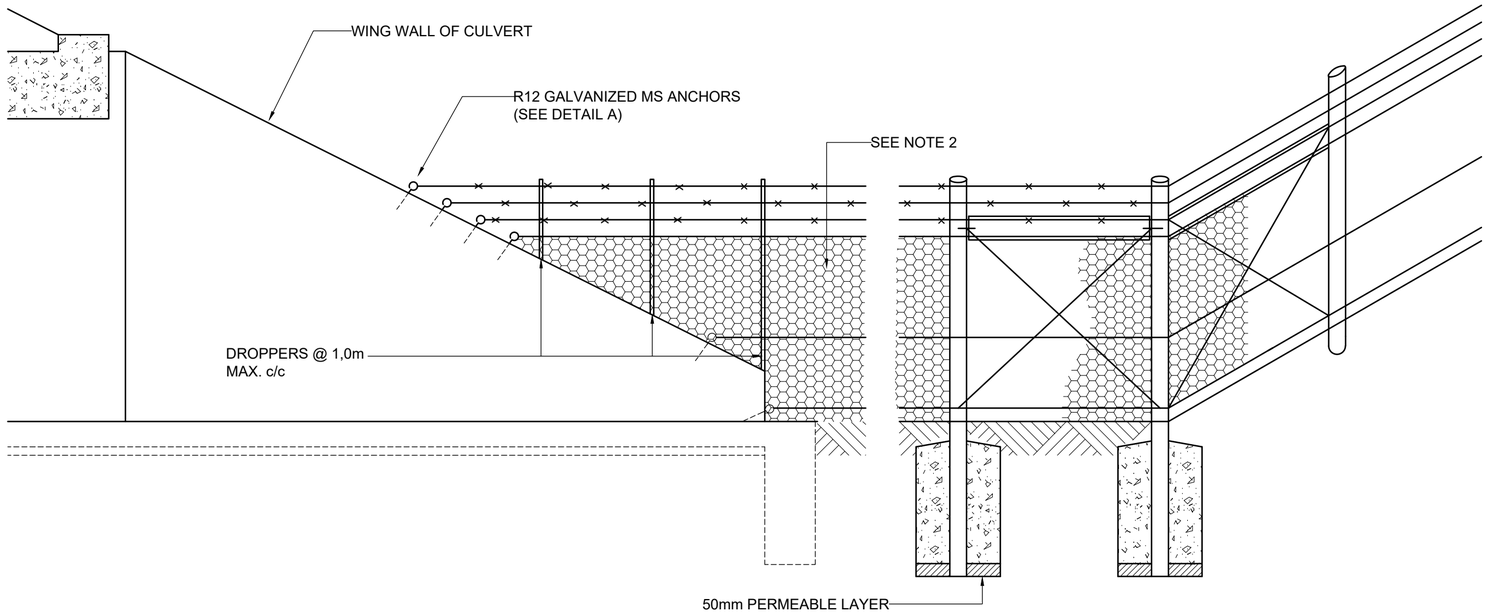

CORNER POST

ELEVATION A-A

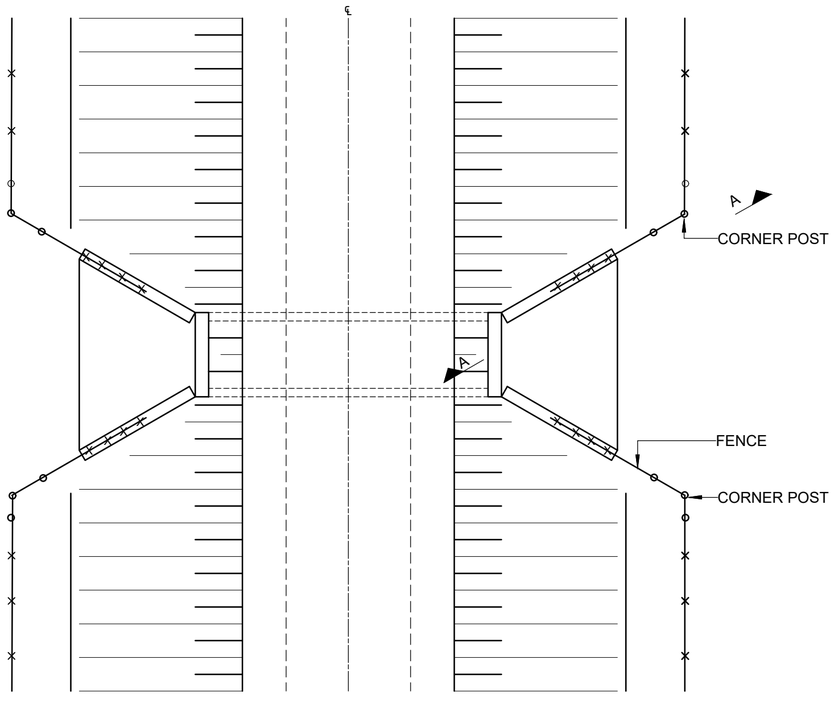

PLAN

NOTES :

1. REFER TO DWG. No. WCS/55/1/C1 & C2 FOR GENERAL DETAILS OF FENCING.
2. 75mm HEXAGONAL WIRE NETTING OF 1,8mm DIA. GALVANIZED MILD STEEL VERMIN PROOF FENCING SHOWN. DETAIL FOR STOCK PROOF FENCING SIMILAR.

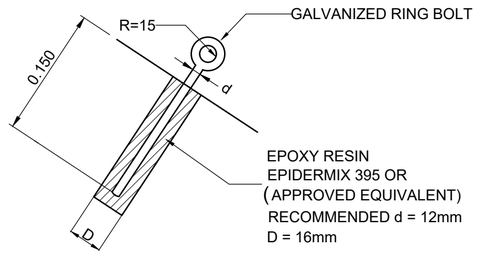

DETAIL A
SCALE 1:10

No.	DATE	ADDITIONS AND AMENDMENTS
0	OCT - 2023	ORIGINAL VERSION

STANDARD PLANS

WESTERN CAPE GOVERNMENT
DEPARTMENT OF INFRASTRUCTURE
TRANSPORT INFRASTRUCTURE BRANCH

FENCING

TYPICAL DETAILS OF FENCING AT UNDERPASSES

SCALE : N.T.S.

A2 ORIGINAL

INDEX NO.
WCS/55/1/C3

PLAN NO.
SHEET 3 OF 8

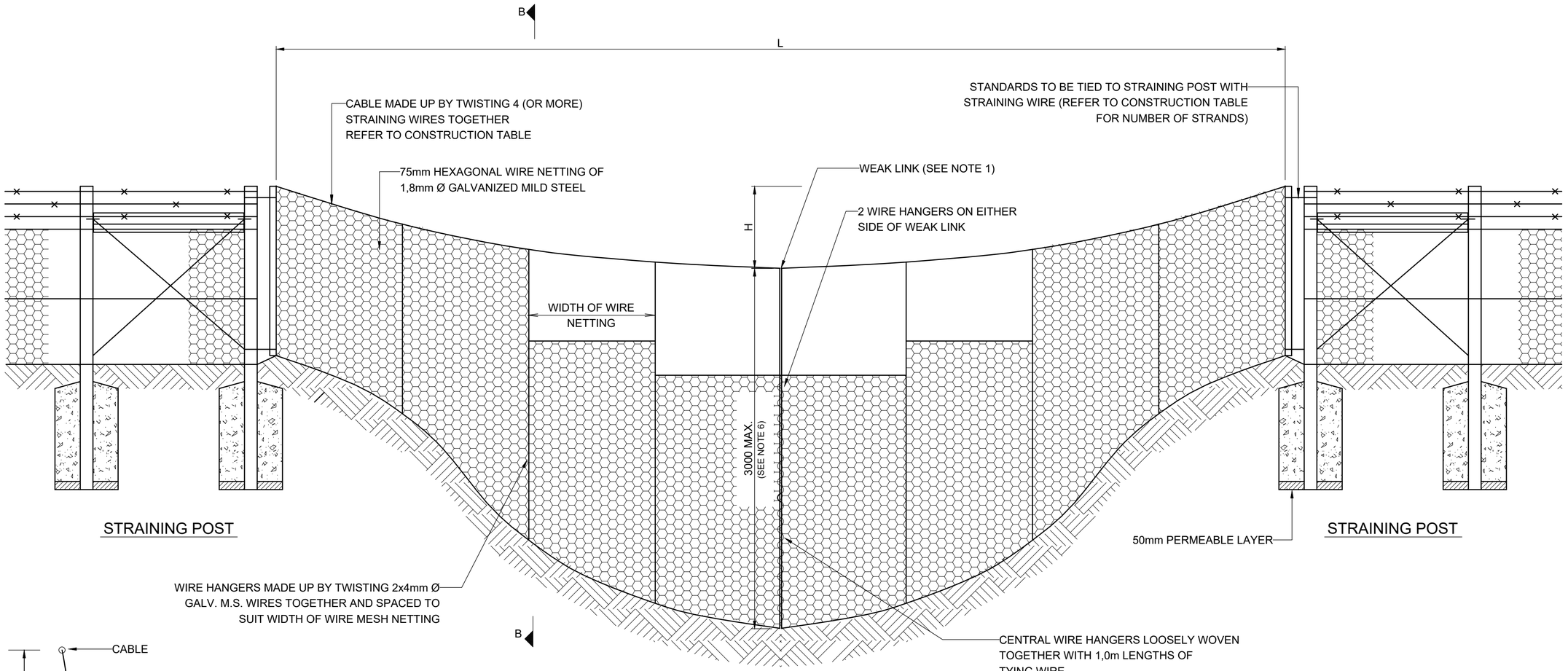

ELEVATION

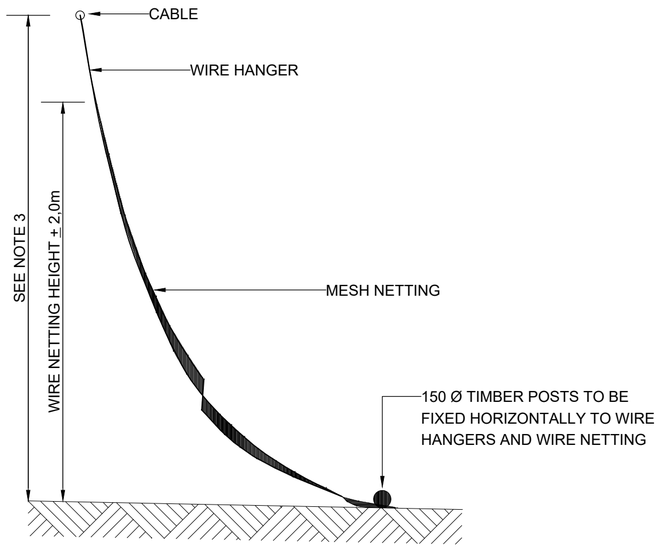

SECTION B-B

CONSTRUCTION TABLE			
SPAN L (m)	No OF STRAINING WIRES	H (m)	No OF LOOPS IN WEAK LINK
10	4	0.2	2
15	4	0.3	2
20	4	0.5	2
25	6	0.6	3
30	6	0.8	3
>30	SPECIAL DESIGN BY THE ENGINEER		

NOTES :

1. WEAK LINK IN CABLE MAY BE POSITIONED EITHER AT END STANDARDS OR IN CENTRE OF CABLE AS SHOWN. FORM BY LOOPING A STRAINING WIRE THROUGH WIRE HANGERS. NUMBER OF LOOPS ARE TABULATED IN CONSTRUCTION TABLE.
2. FENCES ON THE UPSTREAM SIDE OF LARGE CULVERTS AND BRIDGES SHOULD PREFERABLY BE ANCHORED TO THE WINGWALLS (REFER TO DWG. No. WCS/55/1/C3).
3. WHEN HEIGHT OF CABLE IS LESS THAN 2,0m, WIRE HANGERS MAY BE OMITTED AND NETTING LAPPED HORIZONTALLY.
4. IF LENGTH OF WIRE NETTING EXCEEDS 3,0m, FENCING TO BE DESIGNED BY THE ENGINEER.

No.	DATE	ADDITIONS AND AMENDMENTS
0	OCT - 2023	ORIGINAL VERSION

STANDARD PLANS

WESTERN CAPE GOVERNMENT
DEPARTMENT OF INFRASTRUCTURE
TRANSPORT INFRASTRUCTURE BRANCH

FENCING

TYPICAL DETAILS OF FENCING AT RIVER CROSSING

SCALE : N.T.S.

A2 ORIGINAL

INDEX NO. WCS/55/1/C4

PLAN NO. SHEET 4 OF 8

NOTE:

GATE TO BE PROVIDED WITH A 70mm BRASS PADLOCK (SANS APPROVED) AND 600mm LONG GALVANIZED STEEL CHAIN (SIZE: 10mm WITH 40mm PITCH AND INSIDE WIDTH OF 13mm) FIXED TO THE FENCE POST WITH A 12mmØ BOLT AND WASHER TO SUITE POST SIZE.

DETAIL FOR VERMIN PROOF FENCING

(REFER TO DWG. No. WCS/55/1/C1)

DETAIL FOR STOCK PROOF FENCING

(REFER TO DWG. No. WCS/55/1/C2)

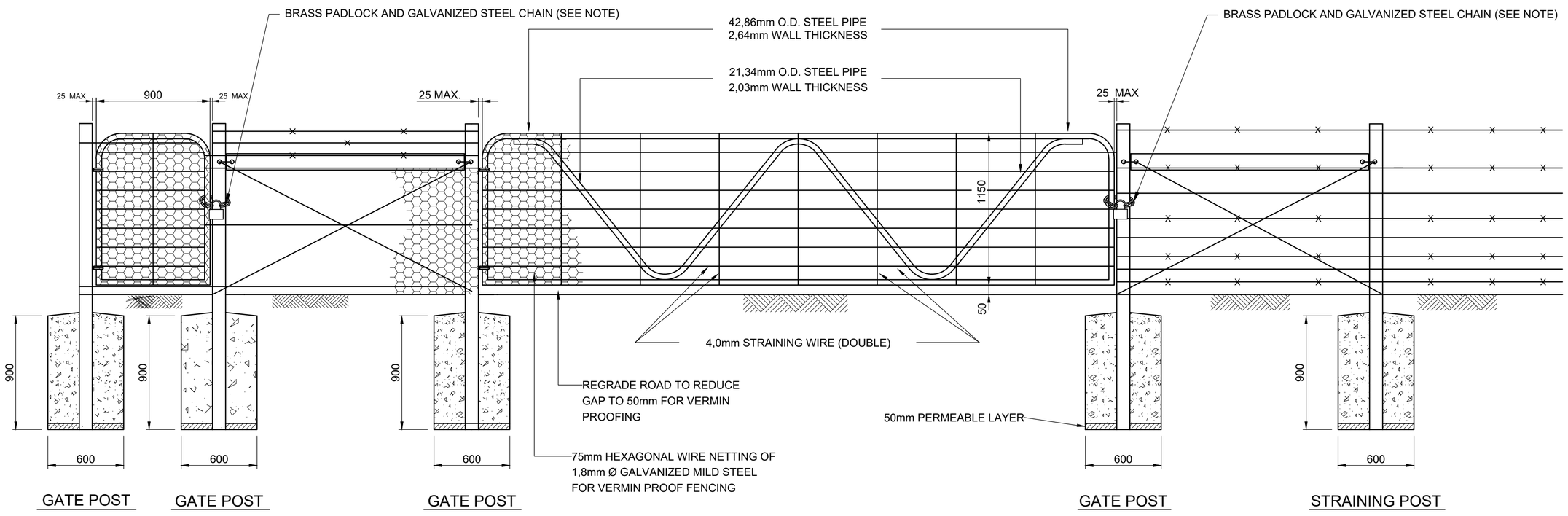

PEDESTRIAN GATE

FARM GATE
(SIZE AS SPECIFIED)

PEDESTRIAN AND FARM GATES

SCALE 1:25

No.	DATE	ADDITIONS AND AMENDMENTS
0	OCT - 2023	ORIGINAL VERSION

STANDARD PLANS

WESTERN CAPE GOVERNMENT
DEPARTMENT OF INFRASTRUCTURE
TRANSPORT INFRASTRUCTURE BRANCH

FENCING

DETAIL OF GATES

SCALE : N.T.S.

A2 ORIGINAL

INDEX NO. WCS/55/1/C5

PLAN NO. SHEET 5 OF 8

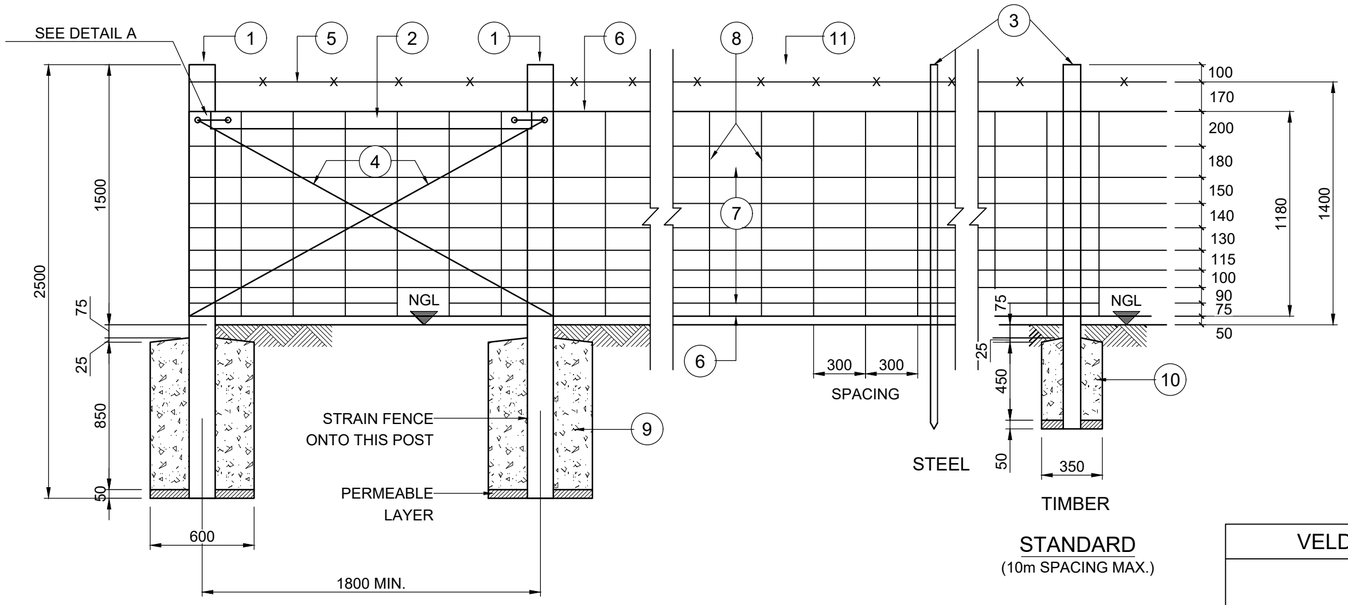

CORNER AND STRAINING POST

(300m MAX.SPACING IN SOFT GROUND)

(400m MAX.SPACING IN HARD GROUND)

STANDARD

(10m SPACING MAX.)

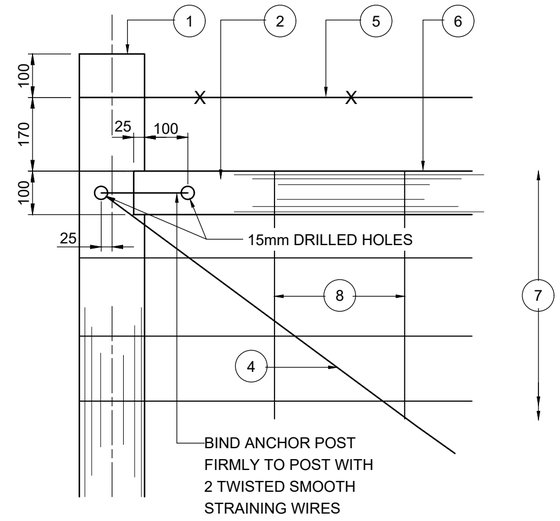

DETAIL A

VELDSPAN PATTERN CODE

NUMBER OF HORIZONTAL WIRES

HEIGHT OF FENCE (cm)

10 - 119 - 30

SPACING OF VERTICAL WIRES (cm)

GENERAL DETAILS OF FENCING

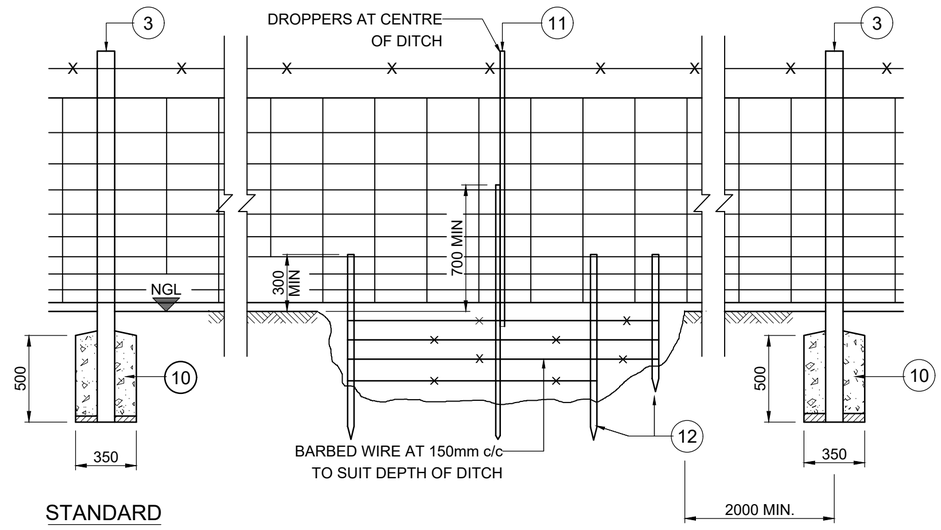

STANDARD

ACROSS CHANNELS & TRENCHES

STANDARD

LEGEND

1. 125-150 TOP Ø TREATED TIMBER POLE 2500* LONG
2. ANCHOR POST 100-125 TOP Ø TREATED TIMBER POLE APPROX.1725 LONG. SEE DETAIL A
3. 100-125 TOP Ø TREATED TIMBER POLE 2100* LONG OR 2100* LONG 2,5 kg/m Y STEEL STANDARD
4. 4-CORD SMOOTH STRAINING WIRE
5. STANDARD BARBED WIRE. (OPTIONAL)
6. EDGE WIRES : HIGH TENSILE "VELD 1000" WIRE DIA. = 3,06mm, BREAKING FORCE = 8,09 k
7. LINE WIRES : HIGH TENSILE "VELD 1000" WIRE DIA. = 2,20mm, BREAKING FORCE = 4,51 kN
8. VERTICAL STAY WIRES : MILD STEEL DIA. = 2,50mm, BREAKING FORCE = 2,59 kN
9. CLASS 20/20 CONCRETE
10. STANDARDS EMBEDDED IN CLASS 20/20 CONCRETE IF ORDERED BY THE ENGINEER
11. 0,56 kg/m RIDGEBACK PATTERN DROPPER
12. STAKES OF SUITABLE LENGTH DRIVEN FIRMLY INTO SIDES & BED OF TRENCH AT APPROVED SPACINGS. STAKES TO BE ALIGNED WITH DROPPER AT CENTRE OF TRENCH

* SUBTRACT 200mm IF (5) NOT SPECIFIED

No.	DATE	ADDITIONS AND AMENDMENTS
0	OCT - 2023	ORIGINAL VERSION

STANDARD PLANS

WESTERN CAPE GOVERNMENT
DEPARTMENT OF INFRASTRUCTURE
TRANSPORT INFRASTRUCTURE BRANCH

FENCING

DETAIL OF VELDSPAN FENCING

SCALE : N.T.S.

A2 ORIGINAL

INDEX NO. WCS/55/1/C6

PLAN NO. SHEET 6 OF 8

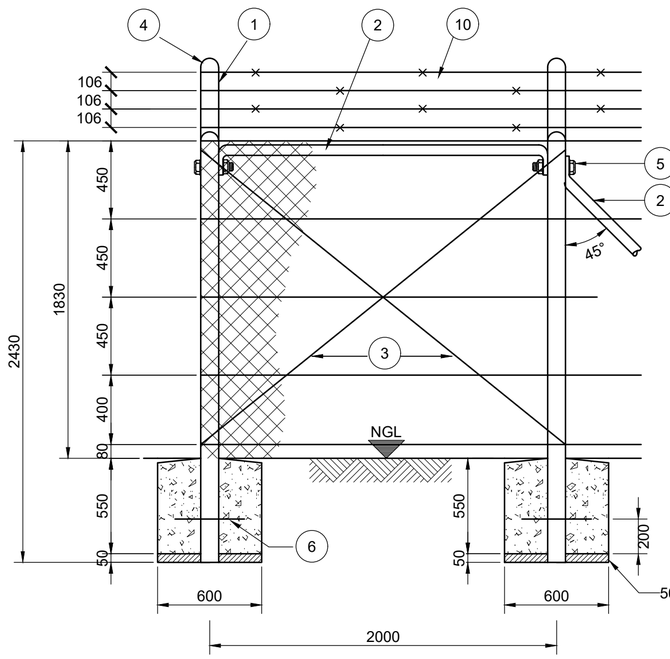

CORNER POST

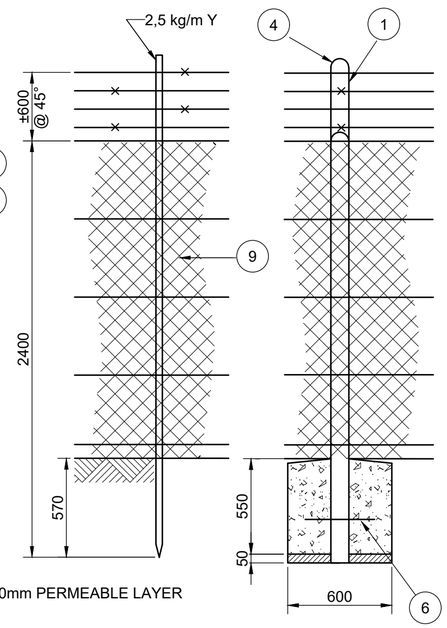

STRAINING POST

STANDARD
(3,5m c/c MAX)

STRAINING POST
(14.0m c/c MAX)

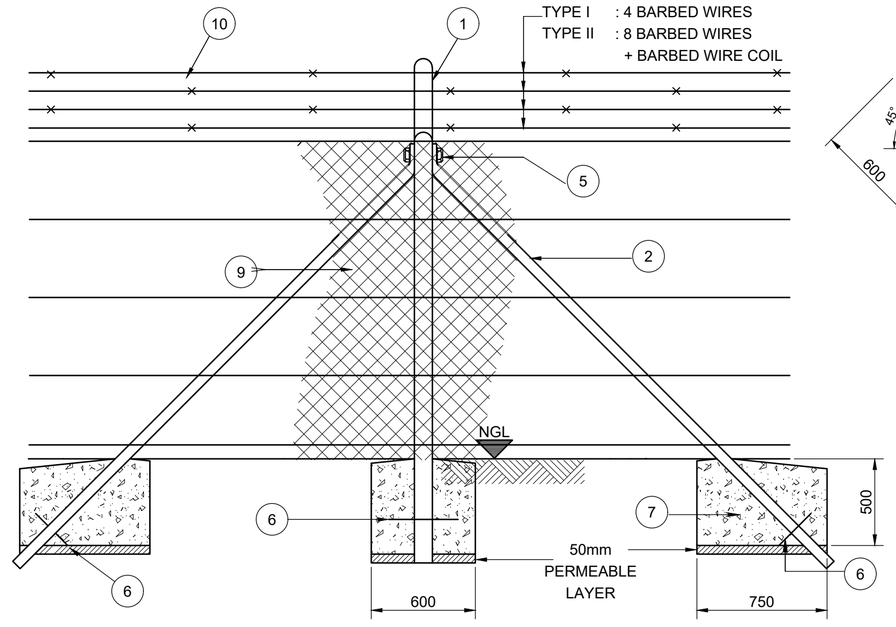

STRAINING POST
(70m c/c MAX)

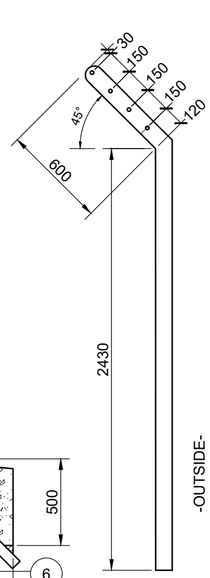

TYPE I

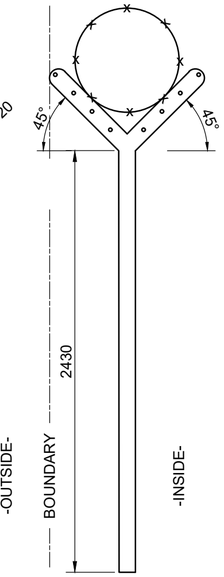

TYPE II

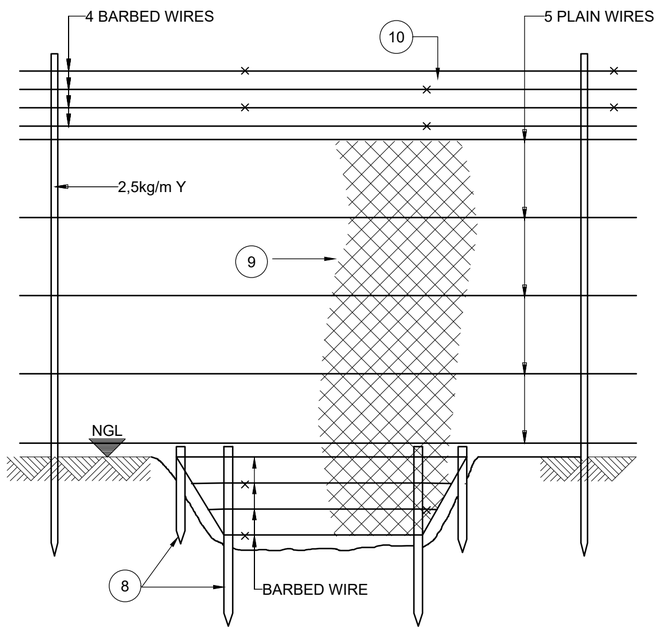

ACROSS CHANNELS AND TRENCHES

GENERAL DETAILS OF FENCING

NOTES :

1. ALL POSTS ARE TO BE SEALED BY WELDING A STEEL CAP OVER THE OPENING AT THE TOP.
2. ALL STEEL MEMBERS TO BE HOT DIPPED GALVANIZED WITH A 85 MICRON COATING IN ACCORDANCE WITH SANS 121:2000.
3. THIS DRAWING TO BE READ IN CONJUNCTION WITH SECTION 5500 OF THE COLTO STANDARD SPECIFICATIONS FOR ROAD AND BRIDGE WORKS.

REFER TO DWG. No. WCS/55/1/C8
FOR DETAILS OF SECURITY GATE

LEGEND

1	101,6mm OUTSIDE Ø STEEL PIPE, WALL THICKNESS 2,95mm OR 15 kg/m RAIL
2	60,33mm OUTSIDE Ø STEEL PIPE, WALL THICKNESS 2,95mm
3	4-CORD STRAINING WIRE
4	SEE NOTE 1
5	12mm Ø GALVANIZED STEEL BOLT
6	10mm Ø x 300mm ANCHOR PIN
7	CLASS 20/20 CONCRETE
8	STAKES OF SUITABLE LENGTH DRIVEN FIRMLY INTO SIDES & BED OF TRENCH AT APPROVED SPACINGS
9	DIAMOND MESH 2,5mm THICK WITH 64mm x 64mm OPENINGS
10	GALVANIZED BARBED WIRE : HIGH TENSILE STEEL 2,80mm x 1,90mm OVAL SHAPED ZINC COATED WIRE

No.	DATE	ADDITIONS AND AMENDMENTS
0	OCT - 2023	ORIGINAL VERSION

STANDARD PLANS

WESTERN CAPE GOVERNMENT
DEPARTMENT OF INFRASTRUCTURE
TRANSPORT INFRASTRUCTURE BRANCH

FENCING

SECURITY FENCE

SCALE : N.T.S.

A2 ORIGINAL

INDEX NO.
WCS/55/1/C7

PLAN NO.
SHEET 7 OF 8

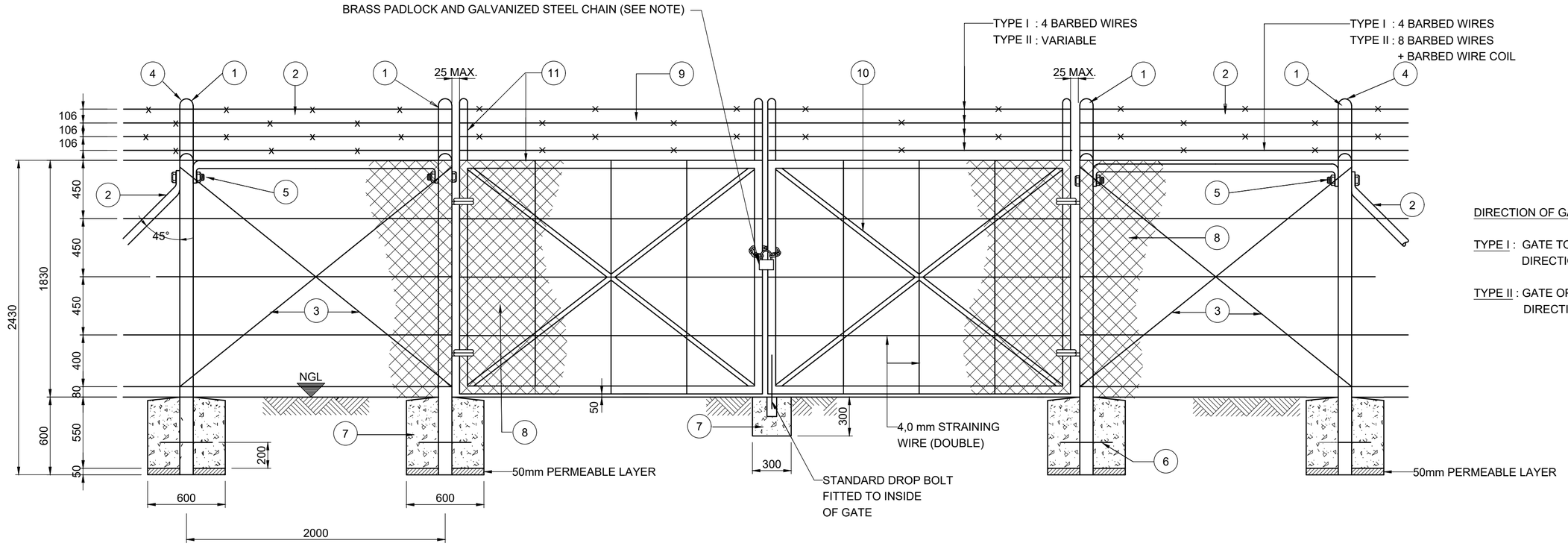

DIRECTION OF GATE OPENING

TYPE I : GATE TO OPEN IN OPPOSITE DIRECTION TO VERANDAH

TYPE II : GATE OPENING IN BOTH DIRECTIONS POSSIBLE

STRAINING POST | GATE POST

GATE
(TYPE I SHOWN)
(WIDTH OF GATE TO SUIT APPLICATION)

REFER TO DWG.No.WCS/55/1/C7 FOR GENERAL DETAILS OF FENCING

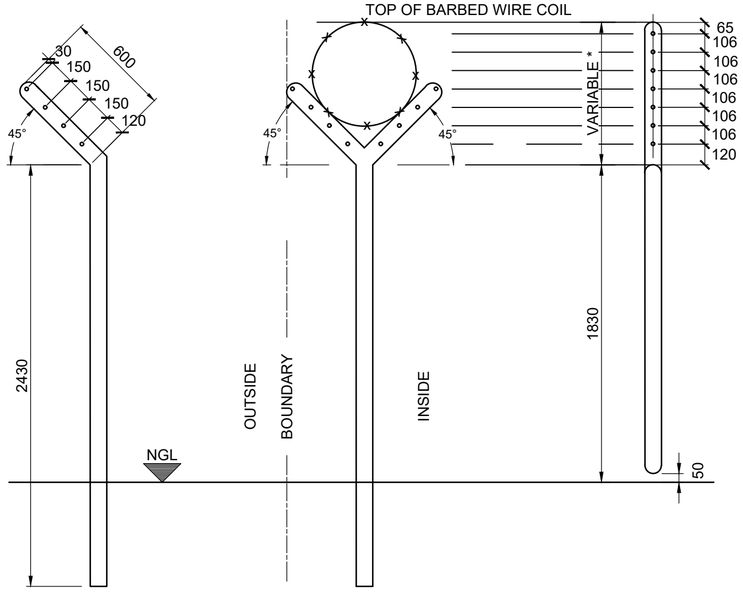

TYPE I GATE POST & GATE | TYPE II GATE POST | TYPE II GATE

GENERAL DETAILS OF GATE
SCALE 1:25

* EXTENSION ON TOP OF GATE TO BE SIMILAR IN HEIGHT TO TOP OF BARBED WIRE COIL

NOTES :

1. ALL POSTS ARE TO BE SEALED BY WELDING A STEEL CAP OVER THE OPENING AT THE TOP.
2. ALL STEEL MEMBERS TO BE HOT DIPPED GALVANIZED WITH A 85 MICRON COATING IN ACCORDANCE WITH SANS 121:2000.
3. THIS DRAWING TO BE READ IN CONJUNCTION WITH SECTION 5500 OF THE COLTO STANDARD SPECIFICATIONS FOR ROAD AND BRIDGE WORKS.
4. GATE TO BE PROVIDED WITH A 70mm BRASS PADLOCK (SANS APPROVED) AND 600mm LONG GALVANIZED STEEL CHAIN (SIZE: 10mm WITH 40mm PITCH AND INSIDE WIDTH OF 13mm) FIXED TO THE FENCE POST WITH A 12mmØ BOLT AND WASHER TO SUITE POST SIZE.

LEGEND

1	101,6mm OUTSIDE Ø STEEL PIPE, WALL THICKNESS 2,95mm OR 15 kg/m RAIL
2	60,33mm OUTSIDE Ø STEEL PIPE, WALL THICKNESS 2,95mm
3	4-CORD STRAINING WIRE
4	SEE NOTE 1
5	12mm Ø GALVANIZED STEEL BOLT
6	10mm Ø x 300mm ANCHOR PIN
7	CLASS 20/20 CONCRETE
8	DIAMOND MESH 2,5mm THICK WITH 64mm x 64mm OPENINGS
9	GALVANIZED BARBED WIRE : HIGH TENSILE SINGLE STRAND 2,80mm x 1,90mm OVAL SHAPED ZINC COATED WIRE
10	34,13mm OUTSIDE Ø STEEL PIPE, WALL THICKNESS 2,64mm
11	48,42mm OUTSIDE Ø STEEL PIPE, WALL THICKNESS 2,95mm

No.	DATE	ADDITIONS AND AMENDMENTS
0	OCT - 2023	ORIGINAL VERSION

STANDARD PLANS

WESTERN CAPE GOVERNMENT
DEPARTMENT OF INFRASTRUCTURE
TRANSPORT INFRASTRUCTURE BRANCH

FENCING

SECURITY FENCE GATE

SCALE : N.T.S.

A2 ORIGINAL

INDEX NO. WCS/55/1/C8

PLAN NO. SHEET 8 OF 8

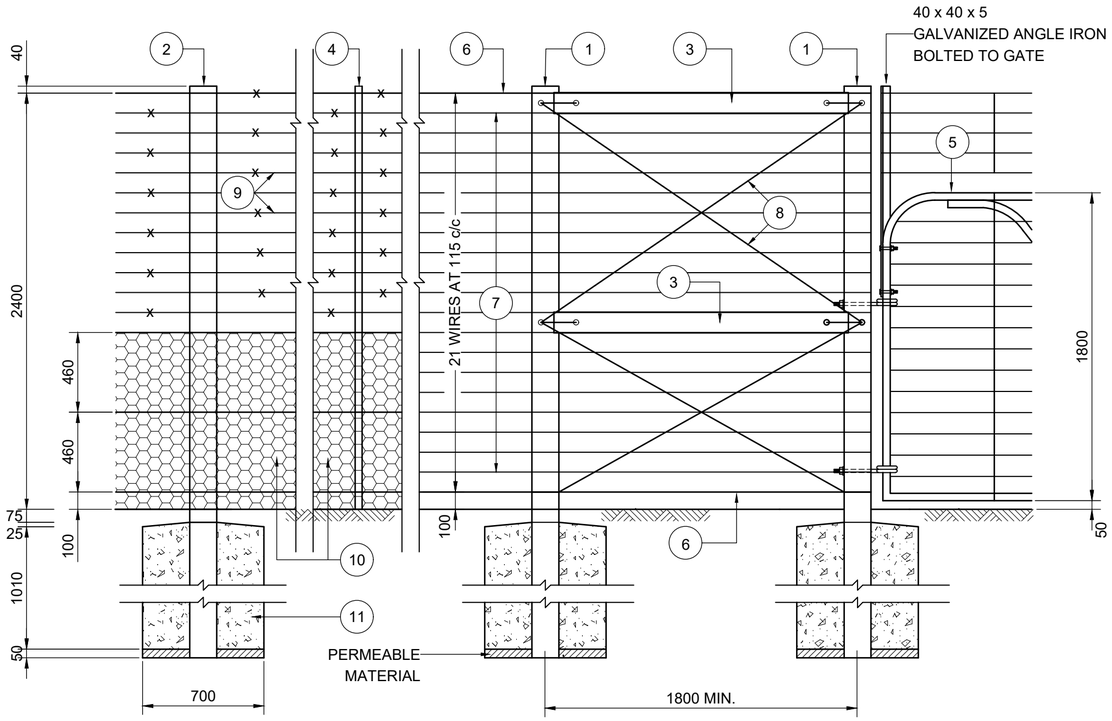

STANDARD	DROPPER	STRAINING POST	CORNER/GATE POST
14m c/c	± 3m c/c MIN. OF 4 BETWEEN STANDARDS	MAX. SPACING OF 280m IN SOFT GROUND MAX. SPACING OF 420m IN HARD GROUND	

VERMIN-PROOF TYPE

STANDARD TYPE

GROUP I

(GROUP I GAME: KUDU, ELAND, IMPALA, WATER BUCK & BUFFALO)

LEGEND

1. 125-150 TOP Ø TREATED TIMBER POLE OR COMMERCIAL 10kg/m IRON RAIL PATTERN. LENGTH : 3560
2. 100-125 TOP Ø TREATED TIMBER POLE OR MILD STEEL 2,5 kg/m Y SECTION. LENGTH : 3560
3. 100-125 TOP Ø TREATED TIMBER POLE OR COMMERCIAL 10kg/m IRON RAIL PATTERN. LENGTH : 1725
4. 32-40mm TOP Ø TREATED TIMBER POLE OR 0,56kg/m RIDGEBACK PATTERN DROPPER. LENGTH : 2400
5. STANDARD W-PATTERN FARM GATE. REFER TO DWG.No. WCS/55/1/C5
6. TOP AND BOTTOM WIRES : SMOOTH STRAINING WIRES
7. SMOOTH FENCING WIRES
8. 4-CORD STRAINING WIRE
9. GALVANIZED BARBED WIRES / HIGH TENSILE STEEL SINGLE STRAND 2,80mm x 1,90mm OVAL SHAPED ZINC COATED WIRE
10. 75mm HEXAGONAL WIRE NETTING 1,8mm Ø GALVANIZED MILD STEEL 1200 WIDE
11. CLASS 20/20 CONCRETE

NOTES :

1. THIS DRAWING TO READ IN CONJUCTION WITH SECTION 5500 OF COLTO STANDARD SPECIFICATIONS FOR ROAD AND BRIDGE WORKS.
2. FOR GROUP II AND GROUP III FENCING REFER TO DWG. No. WCS/55/1/D2.

No.	DATE	ADDITIONS AND AMENDMENTS
0	OCT - 2023	ORIGINAL VERSION

STANDARD PLANS

WESTERN CAPE GOVERNMENT
DEPARTMENT OF INFRASTRUCTURE
TRANSPORT INFRASTRUCTURE BRANCH

FENCING

DETAILS OF GAME PROOF FENCING - GROUP I

SCALE : N.T.S.

A2 ORIGINAL

INDEX NO. WCS/55/1/D1

PLAN NO. SHEET 1 OF 7

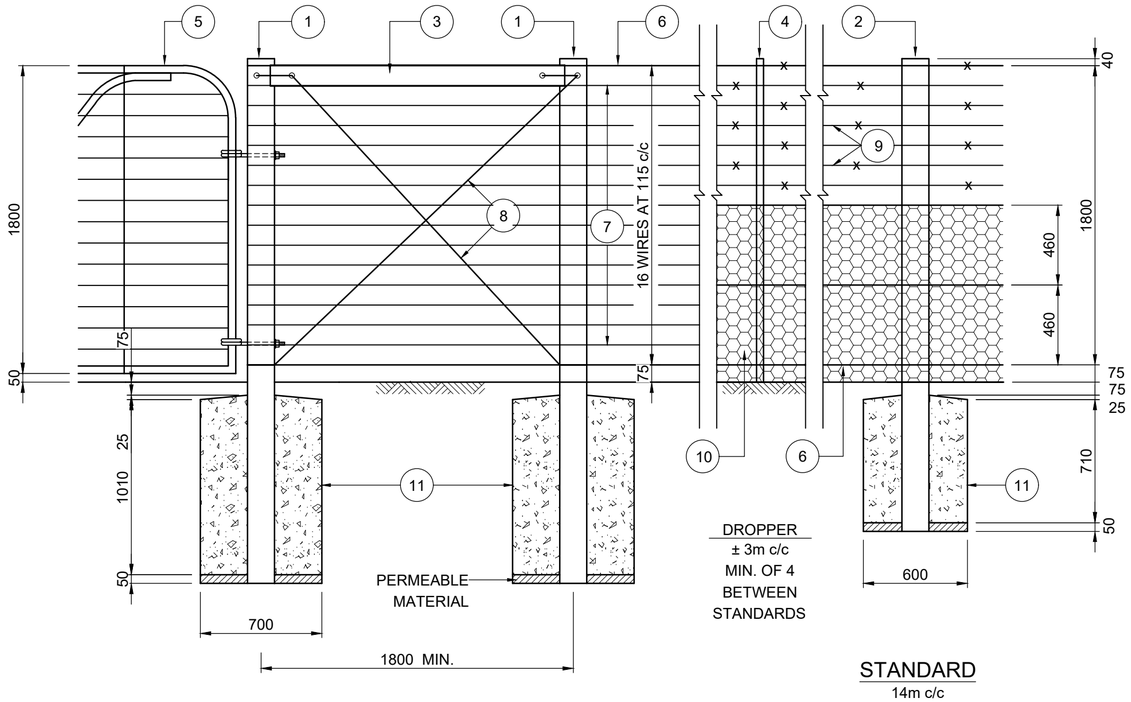

CORNER/GATE POST STRAINING POST

MAX. SPACING OF 280m IN SOFT GROUND
MAX. SPACING OF 420m IN HARD GROUND

STANDARD

14m c/c

STANDARD TYPE

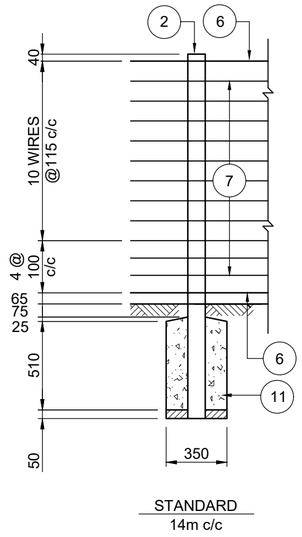

STANDARD

14m c/c

STANDARD TYPE

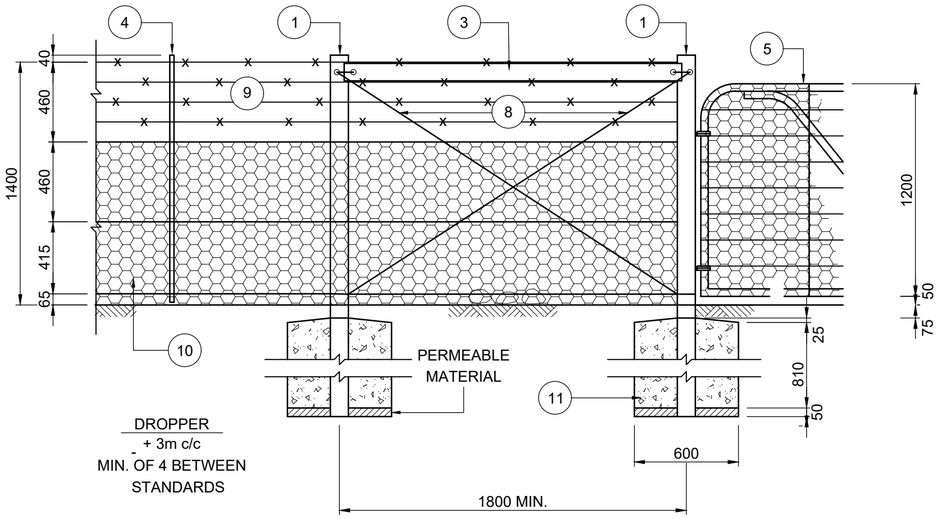

DROPPER

+ 3m c/c

MIN. OF 4 BETWEEN

STANDARD

STRAINING POST CORNER/GATE POST

MAX. SPACING OF 280m IN SOFT GROUND
MAX. SPACING OF 420m IN HARD GROUND

VERMIN-PROOF TYPE

GROUP III

(GROUP III GAME : BLESBOK, BONTEBOK, SPRINGBOK, RHEBOK & OTHER SMALL GAME)

STANDARD TYPE VERMIN-PROOF TYPE

GROUP II

(GROUP II GAME : ORYX (GEMSBOK), RED HARTEBEEST, WILDEBEEST (GNU), SABLE ANTELOPE & QUAGGA

NOTES :

1. THIS DRAWING TO BE READ IN CONJUNCTION WITH SECTION 5500 OF THE COLTO STANDARD SPECIFICATION FOR ROAD AND BRIDGE WORKS.

2. FOR GROUP I FENCING REFER TO DWG. No. WCS/55/1/D1.

LEGEND

1. 125-150 TOP DIA. TREATED TIMBER POLE OR COMMERCIAL 10kg/m IRON RAIL PATTERN. LENGTH : GROUP II - 3000, GROUP III - 2400
2. 100-125 TOP DIA. TREATED TIMBER POLE OR MILD STEEL 2,5 kg/m Y SECTION. LENGTH : GROUP II - 2700, GROUP III - 2100
3. 100-125 TOP DIA. TREATED TIMBER POLE OR COMMERCIAL 10kg/m IRON RAIL PATTERN. LENGTH APPROX. 1725
4. 32-40mm TOP DIA. TREATED TIMBER POLE OR 0,56kg/m RIDGEBACK PATTERN DROPPER. LENGTH : GROUP II - 1800, GROUP III - 1400
5. STANDARD W-PATTERN FARM GATE. REFER TO DWG.No. WCS/55/1/C5
6. TOP AND BOTTOM WIRES : SMOOTH STRAINING WIRES
7. INTERMEDIATE WIRES : SMOOTH FENCING WIRES
8. 4 CORD STRAINING WIRE
9. GALVANIZED BARBED WIRES : HIGH TENSILE STEEL SINGLE STRAND 2,80mm x 1,90mm OVAL SHAPED ZINC COATED WIRE
10. 75mm HEXAGONAL WIRE NETTING 1,8mm DIA. GALVANIZED MILD STEEL 1200 WIDE
11. CLASS 20/20 CONCRETE

No.	DATE	ADDITIONS AND AMENDMENTS
0	OCT - 2023	ORIGINAL VERSION

STANDARD PLANS

WESTERN CAPE GOVERNMENT
DEPARTMENT OF INFRASTRUCTURE
TRANSPORT INFRASTRUCTURE BRANCH

FENCING

DETAILS OF GAME PROOF FENCING - GROUPS II AND III

SCALE : N.T.S.

A2 ORIGINAL

INDEX NO. WCS/55/1/D2

PLAN NO. SHEET 2 OF 7

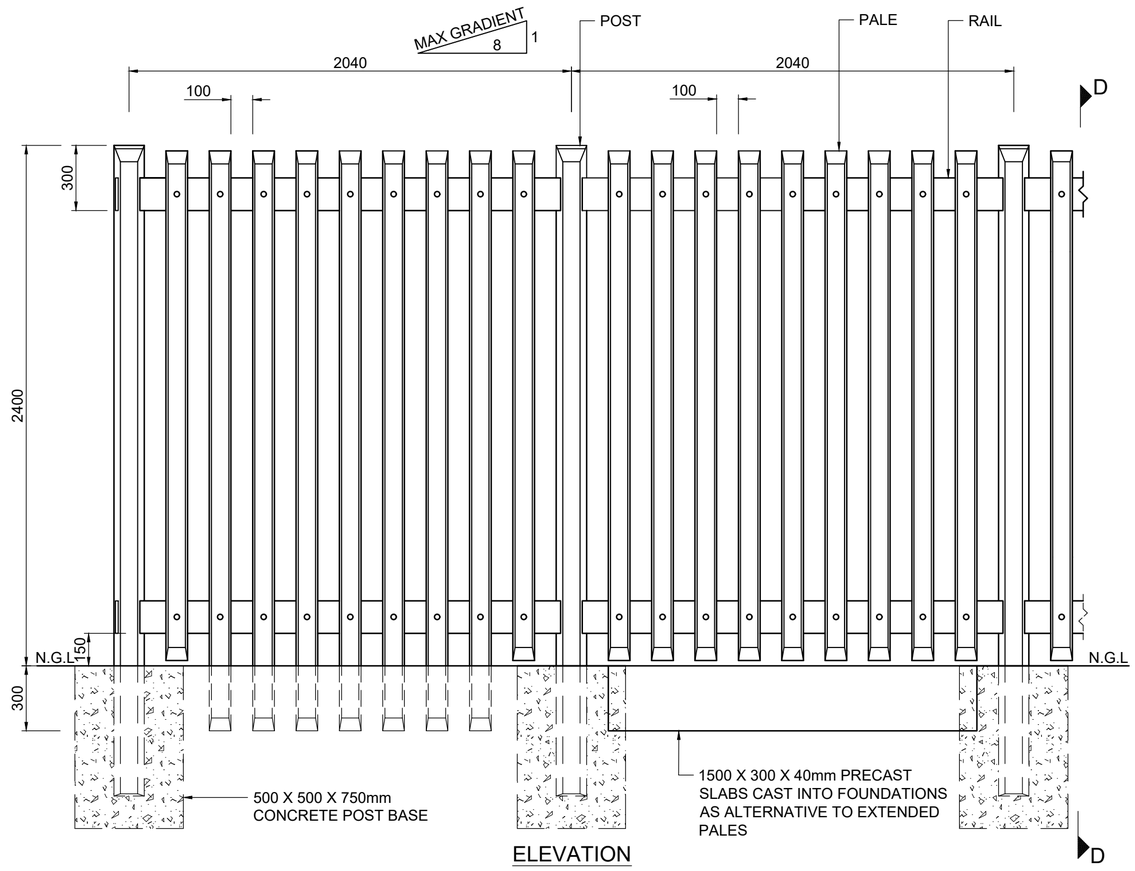

ELEVATION

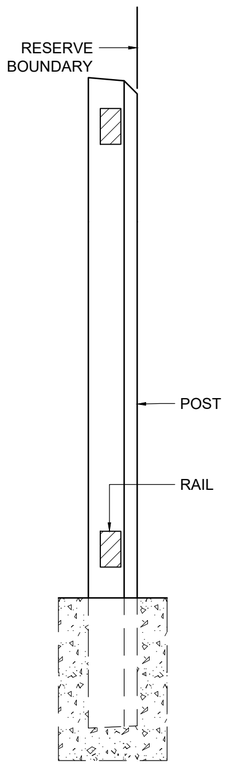

SECTION D-D

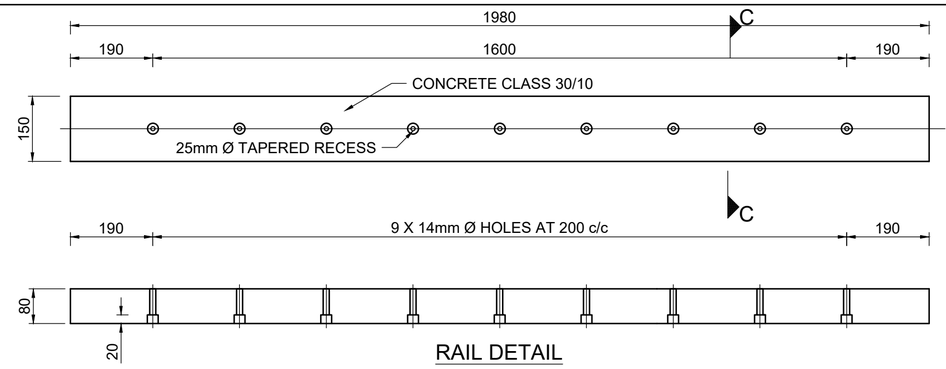

RAIL DETAIL

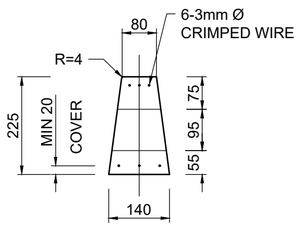

SECTION A-A

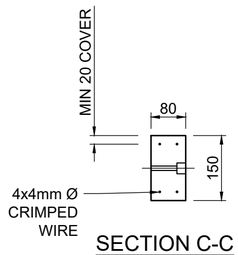

SECTION C-C

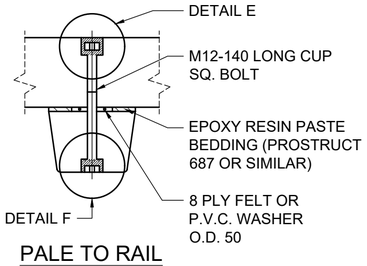

PALE TO RAIL

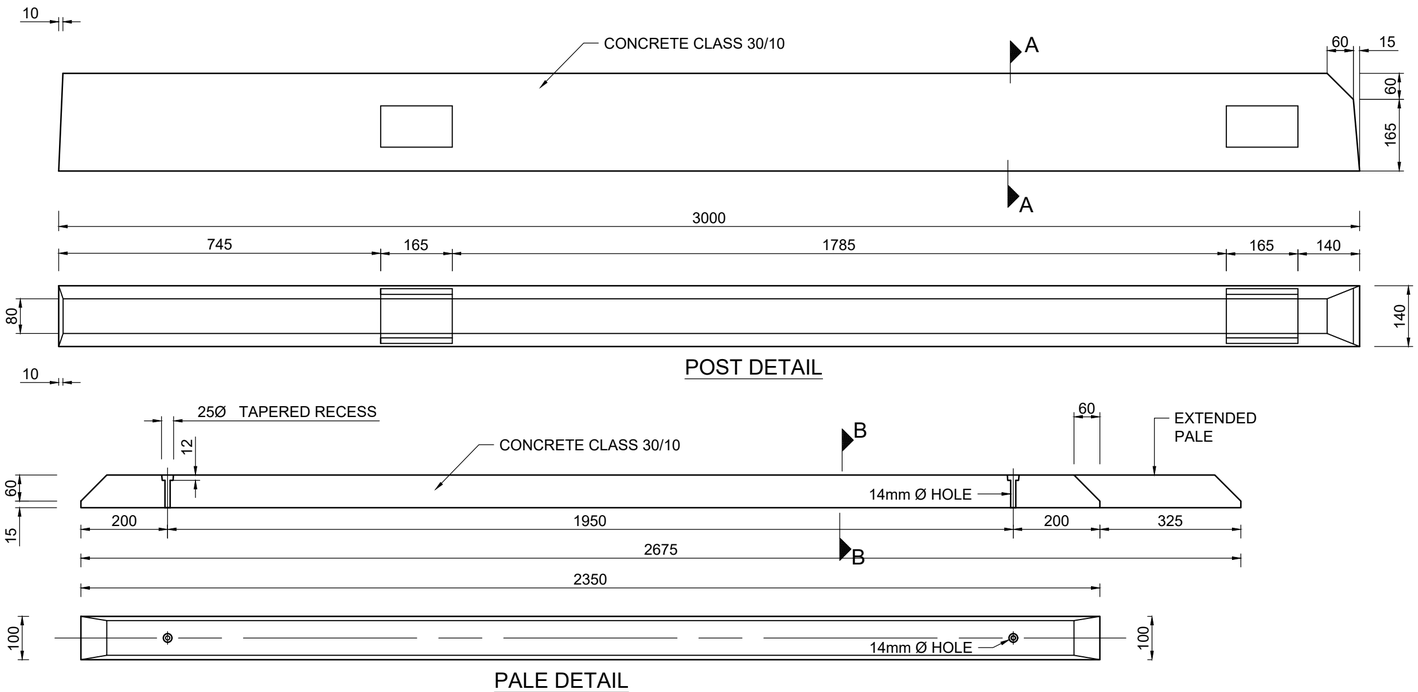

POST DETAIL

PALE DETAIL

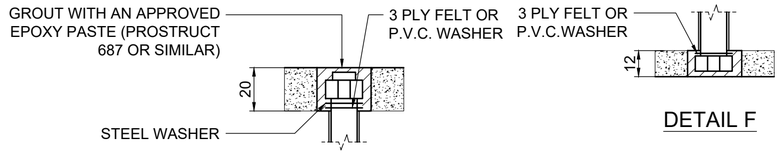

DETAIL E

DETAIL F

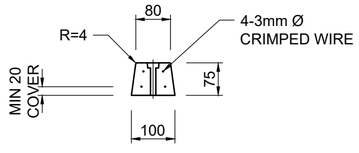

SECTION B-B

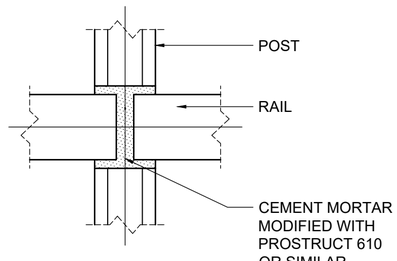

RAIL TO POST CONNECTION DETAILS

No.	DATE	ADDITIONS AND AMENDMENTS
0	OCT - 2023	ORIGINAL VERSION

STANDARD PLANS

WESTERN CAPE GOVERNMENT
DEPARTMENT OF INFRASTRUCTURE
TRANSPORT INFRASTRUCTURE BRANCH

FENCING

DETAIL OF 2400mm HIGH PALISADE FENCING

SCALE : N.T.S.

A2 ORIGINAL

INDEX NO.
WCS/55/1/D3

PLAN NO.
SHEET 3 OF 7

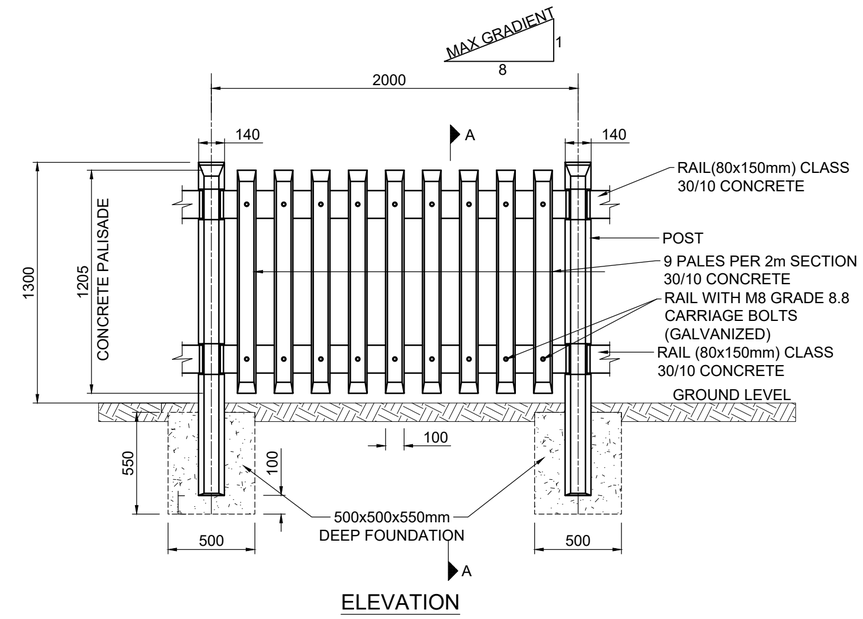

ELEVATION

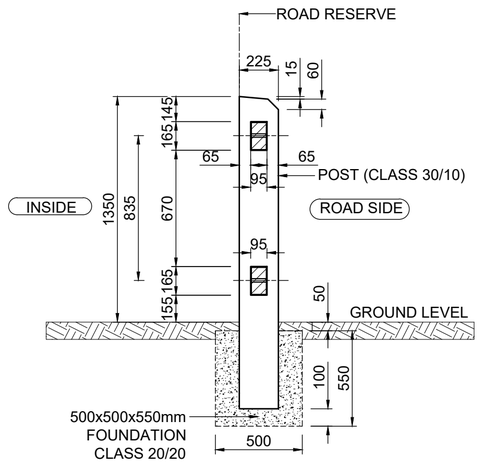

SECTION A-A

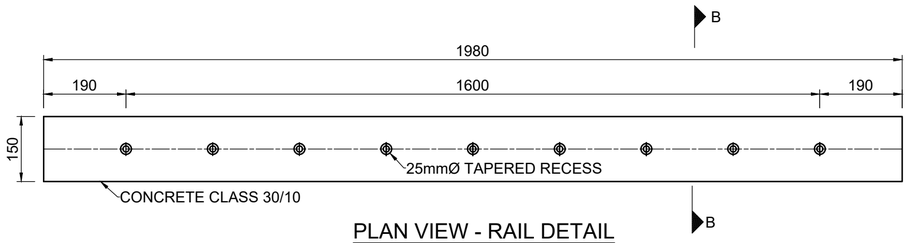

PLAN VIEW - RAIL DETAIL

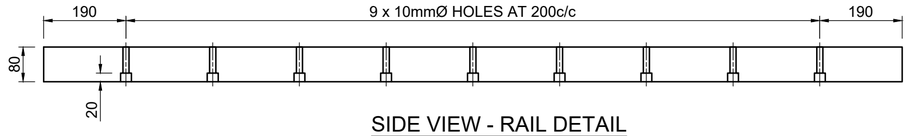

SIDE VIEW - RAIL DETAIL

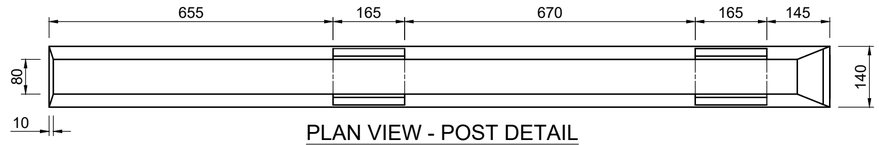

PLAN VIEW - POST DETAIL

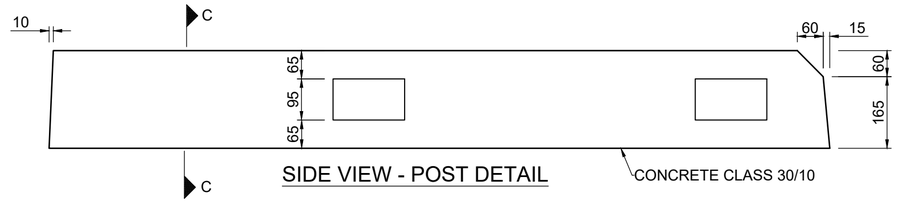

SIDE VIEW - POST DETAIL

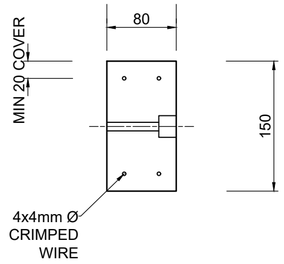

SECTION B-B

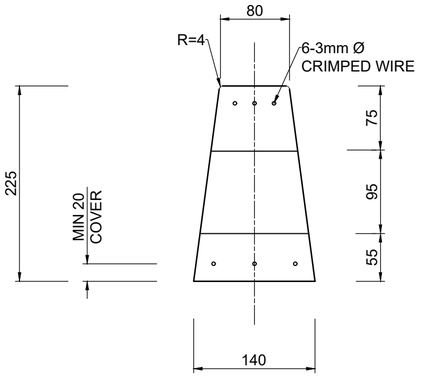

SECTION C-C

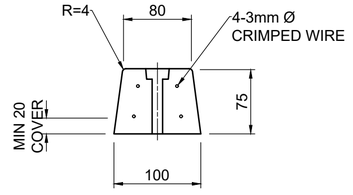

SECTION D-D

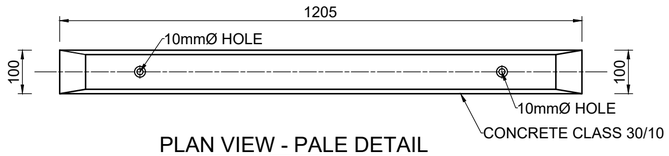

PLAN VIEW - PALE DETAIL

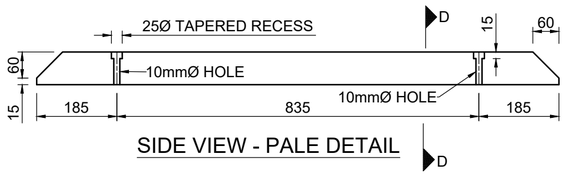

SIDE VIEW - PALE DETAIL

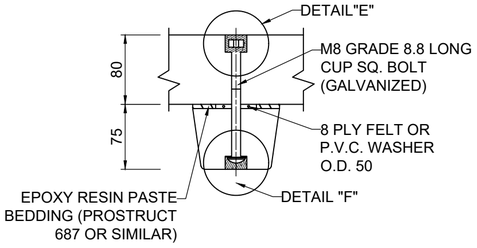

PALE TO RAIL CONNECTION DETAIL

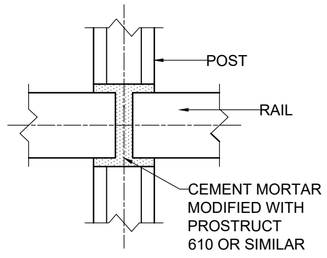

RAIL TO POST CONNECTION DETAIL

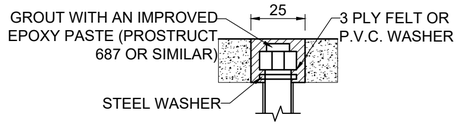

DETAIL E

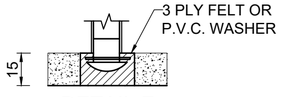

DETAIL F

No.	DATE	ADDITIONS AND AMENDMENTS
0	OCT - 2023	ORIGINAL VERSION

STANDARD PLANS

WESTERN CAPE GOVERNMENT
DEPARTMENT OF INFRASTRUCTURE
TRANSPORT INFRASTRUCTURE BRANCH

FENCING

DETAIL OF 1300mm HIGH PALISADE FENCING

SCALE : N.T.S.

A2 ORIGINAL

INDEX NO.
WCS/55/1/D4

PLAN NO.
SHEET 4 OF 7

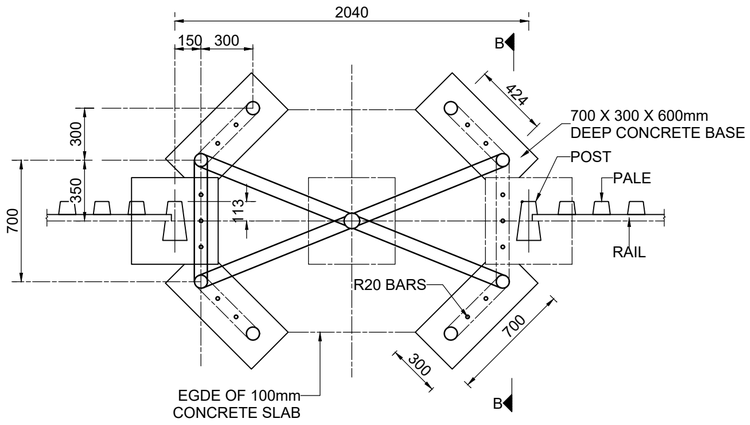

PLAN(GATE NOT SHOWN)

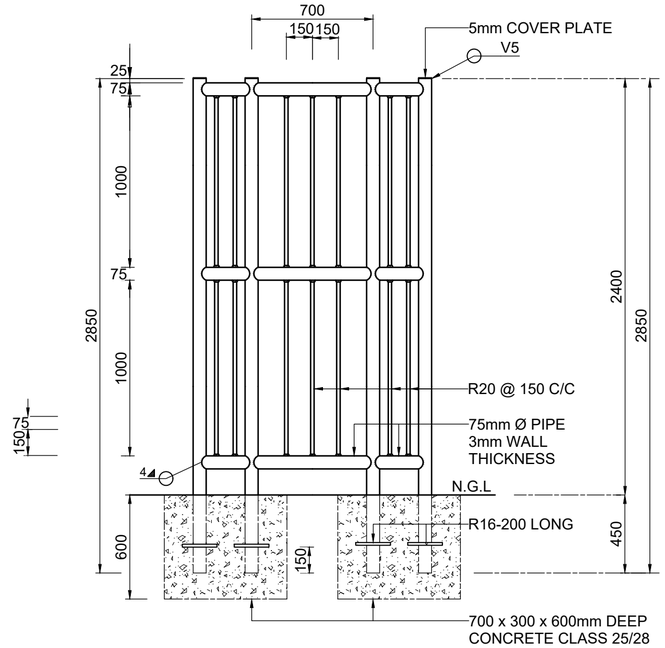

ELEVATION B-B (GATE CAGE)

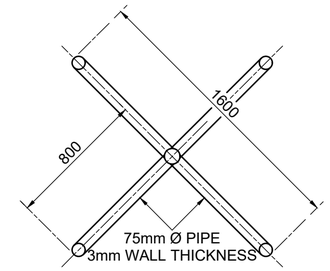

GATE PLAN

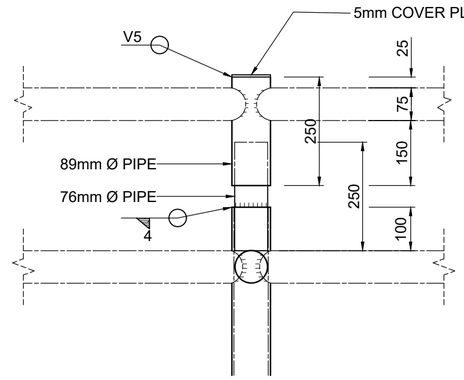

DETAIL B

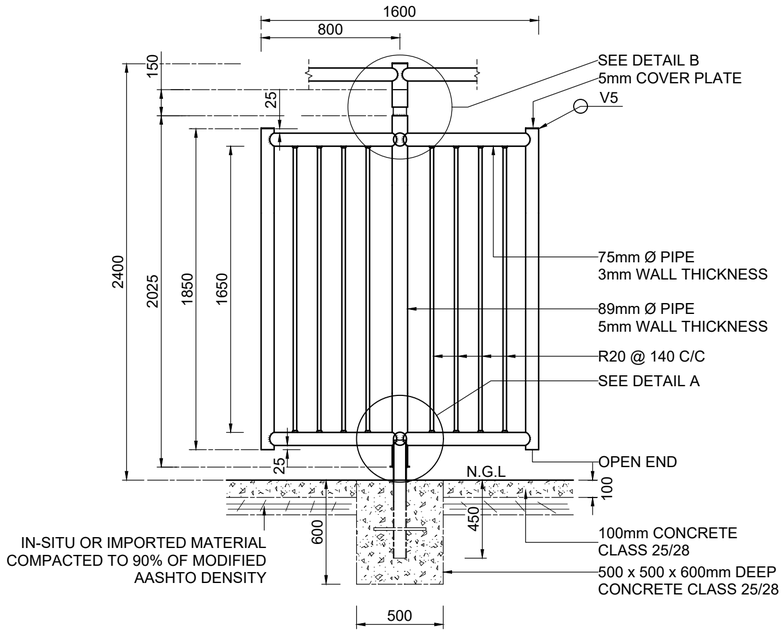

GATE DETAIL

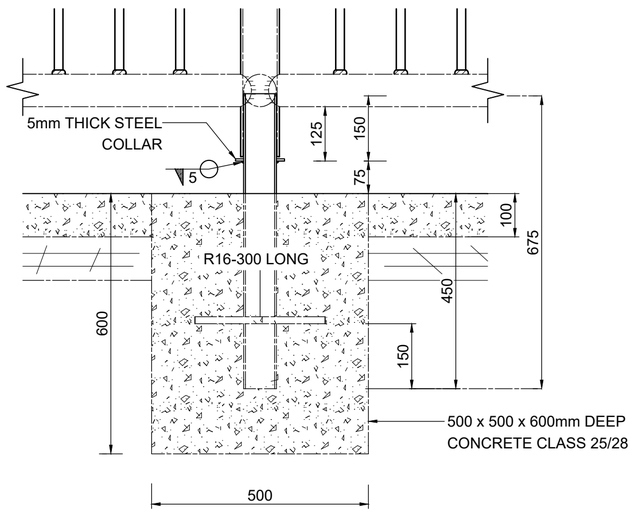

DETAIL A

NOTES :

1. ALL STEEL AND WELDING TO COMPLY WITH SECTION 6700 OF COLTO STANDARD SPECIFICATIONS FOR ROAD AND BRIDGE WORKS.
2. ALL STEEL SHALL BE HOT-DIP GALVANIZED WITH A 85 MICRON COATING IN ACCORDANCE WITH SANS 121:2000.
3. BASES MUST BE EXCAVATED IN FIRM MATERIAL. UNSUITABLE MATERIAL MUST BE REMOVED AND BACKFILLED WITH GRAVEL COMPACTED TO 90% OF MODIFIED AASHTO DENSITY BEFORE EXCAVATION OF BASES.
4. ALL ROTATING PARTS MUST BE GREASED PROPERLY.

No.	DATE	ADDITIONS AND AMENDMENTS
0	OCT - 2023	ORIGINAL VERSION

STANDARD PLANS

WESTERN CAPE GOVERNMENT
DEPARTMENT OF INFRASTRUCTURE
TRANSPORT INFRASTRUCTURE BRANCH

FENCING

ROTATING GATE IN PALISADE FENCING

SCALE : N.T.S.

A2 ORIGINAL

INDEX NO.
WCS/55/1/D5

PLAN NO.
SHEET 5 OF 7

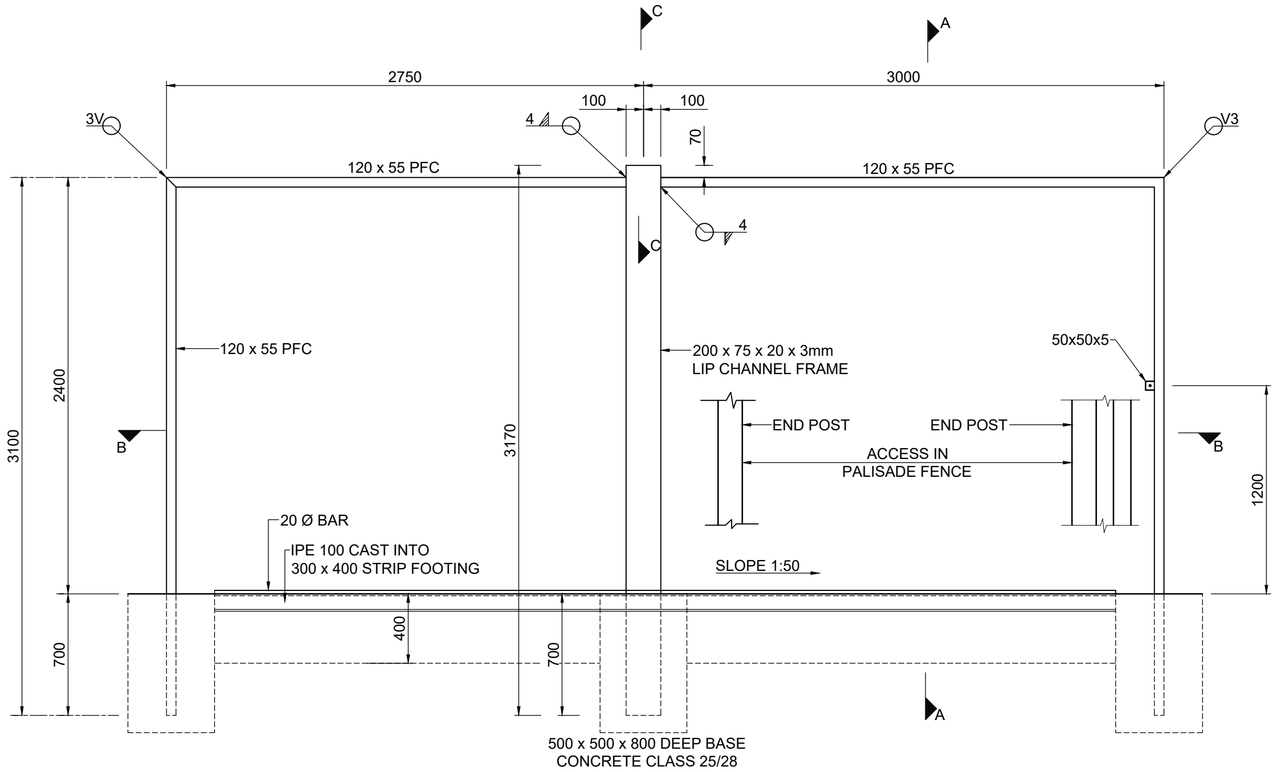

ELEVATION OF GATE POSTS (GATE NOT SHOWN)

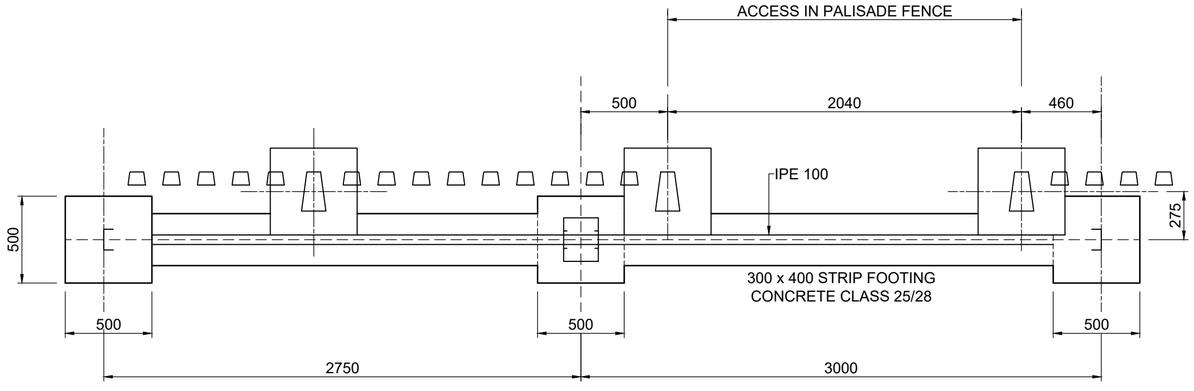

PLAN B-B

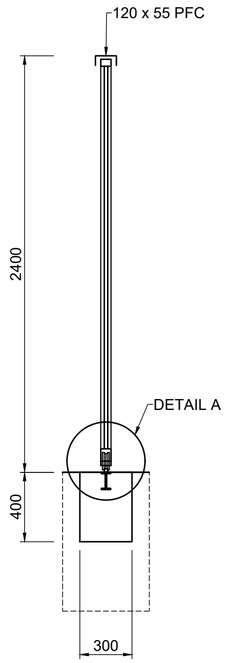

SECTION A-A

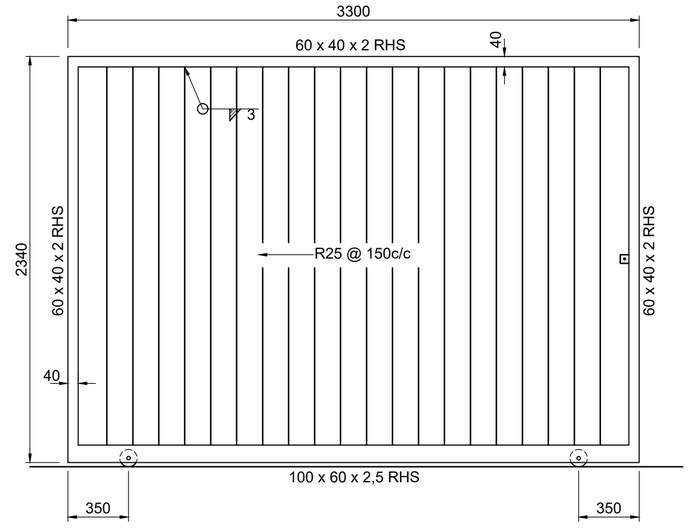

ELEVATION OF GATE

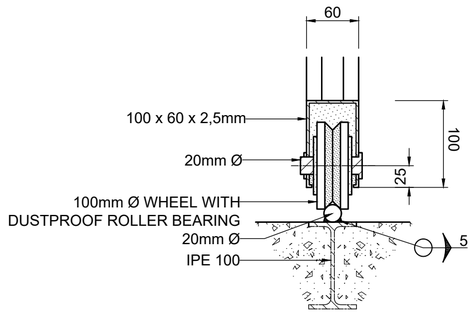

DETAIL A

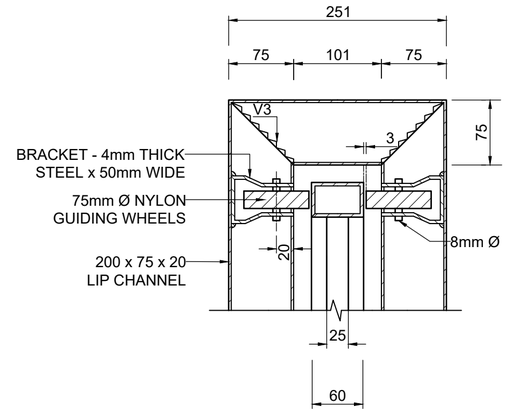

DETAIL C-C

NOTES :

1. ALL STEEL AND WELDING TO COMPLY WITH SECTION 6700 OF COLTO STANDARD SPECIFICATIONS FOR ROAD AND BRIDGE WORKS.
2. ALL STEEL SHALL BE HOT-DIP GALVANIZED WITH A 85 MICRON COATING IN ACCORDANCE WITH SANS 763.
3. BASES MUST BE EXCAVATED IN FIRM MATERIAL. UNSUITABLE MATERIAL MUST BE REMOVED AND BACKFILLED WITH GRAVEL COMPACTED TO 90% OF MODIFIED AASHTO DENSITY BEFORE EXCAVATION OF BASES.
4. CONCRETE CLASS 25/20 IN BASES.

No.	DATE	ADDITIONS AND AMENDMENTS
0	OCT - 2023	ORIGINAL VERSION

STANDARD PLANS

WESTERN CAPE GOVERNMENT
DEPARTMENT OF INFRASTRUCTURE
TRANSPORT INFRASTRUCTURE BRANCH

FENCING

SLIDING GATE IN PALISADE FENCING

SCALE : N.T.S.

A2 ORIGINAL

INDEX NO.
WCS/55/1/D6

PLAN NO.
SHEET 6 OF 7

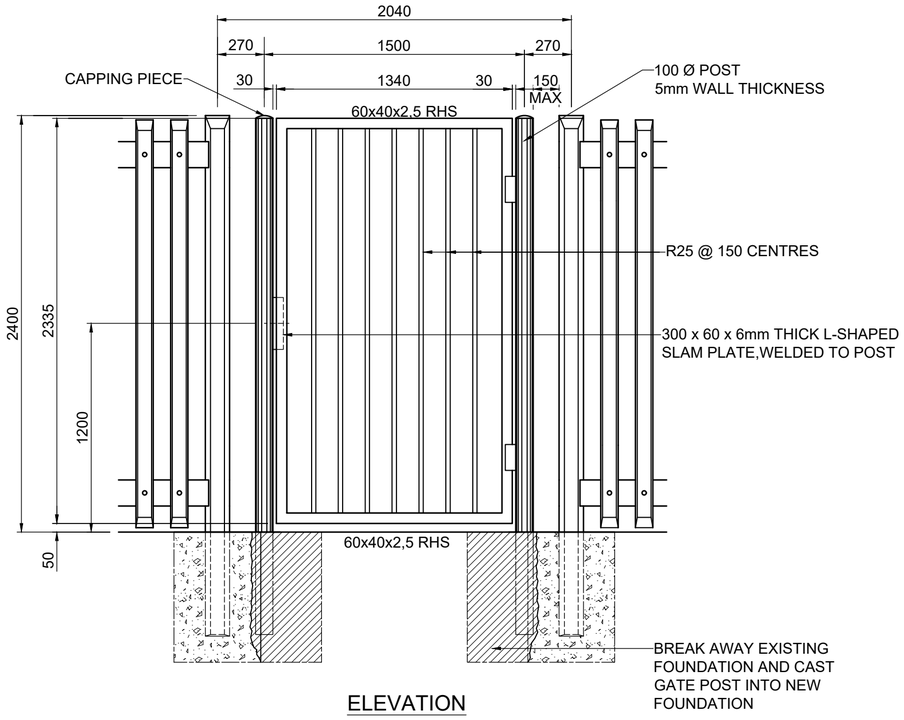

ELEVATION

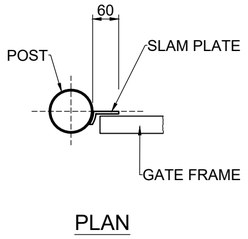

PLAN

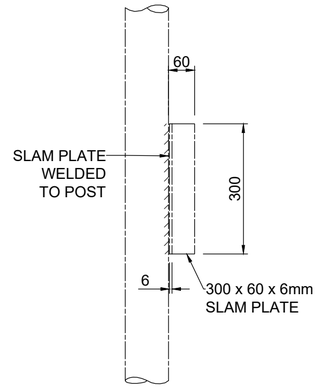

ELEVATION

SLAM PLATE DETAIL

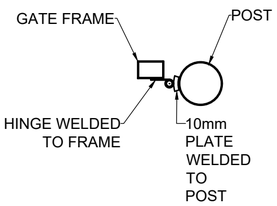

PLAN

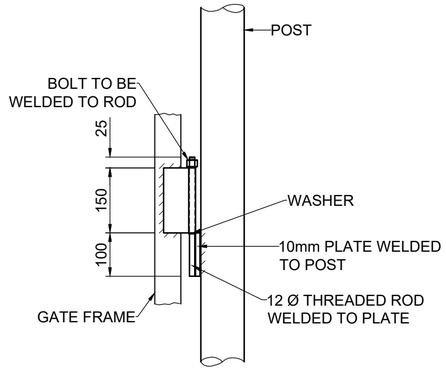

ELEVATION

HINGE DETAIL

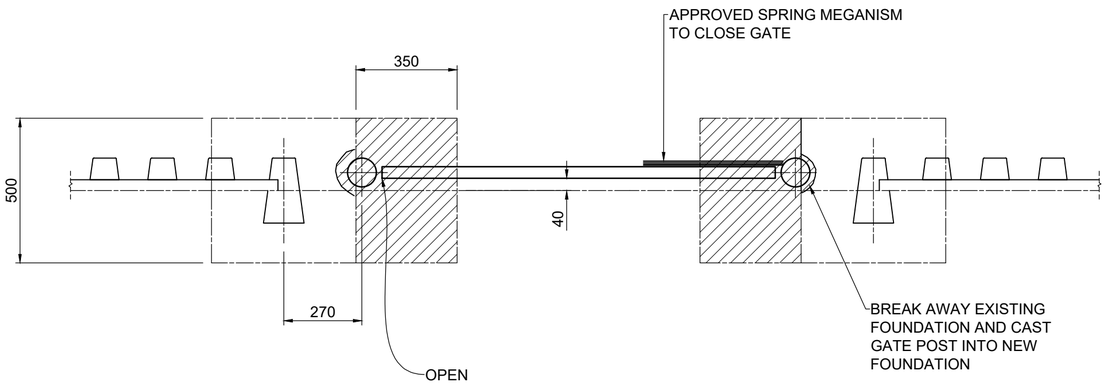

PLAN

NOTES :

1. ALL STEEL AND WELDING TO COMPLY WITH SECTION 6700 OF COLTO STANDARD SPECIFICATION FOR ROAD AND BRIDGES WORKS.
2. ALL STEEL SHALL BE HOT-DIP GALVANIZED WITH A 85 MICRON COATING IN ACCORDANCE WITH SANS 763.
3. ALL ROTATING PARTS TO BE GREASED.

No.	DATE	ADDITIONS AND AMENDMENTS
0	OCT - 2023	ORIGINAL VERSION

STANDARD PLANS

WESTERN CAPE GOVERNMENT
DEPARTMENT OF INFRASTRUCTURE
TRANSPORT INFRASTRUCTURE BRANCH

FENCING

STANDARD GATE IN PALISADE FENCING

SCALE : N.T.S.

A2 ORIGINAL

INDEX NO.
WCS/55/1/D7

PLAN NO.
SHEET 7 OF 7

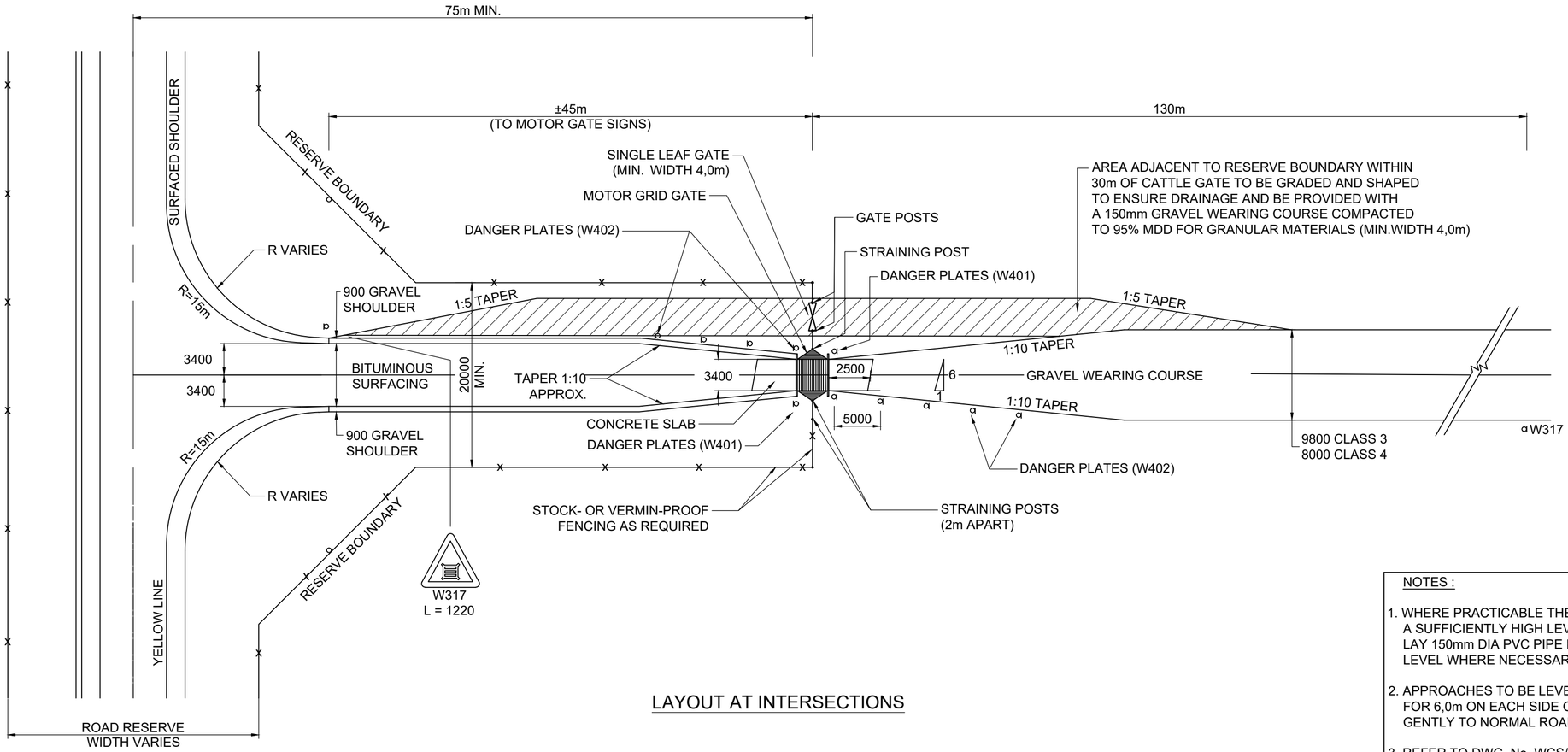

LAYOUT AT INTERSECTIONS

NOTES :

1. WHERE PRACTICABLE THE GRID GATE SURFACE IS TO BE INSTALLED AT A SUFFICIENTLY HIGH LEVEL TO FACILITATE DRAINAGE OF PIT. LAY 150mm DIA PVC PIPE FOR DRAINAGE OF PIT TO NATURAL GROUND LEVEL WHERE NECESSARY.
2. APPROACHES TO BE LEVEL OR ON THE SAME GRADE AS THE GRID ITSELF FOR 6,0m ON EACH SIDE OF GRID GATE AND THEN TO BE SLOPED DOWN GENTLY TO NORMAL ROAD SURFACE.
3. REFER TO DWG. No. WCS/55/2/C2 FOR DETAIL OF SINGLE MOTOR GRID GATE AND CONCRETE APPROACH SLAB.

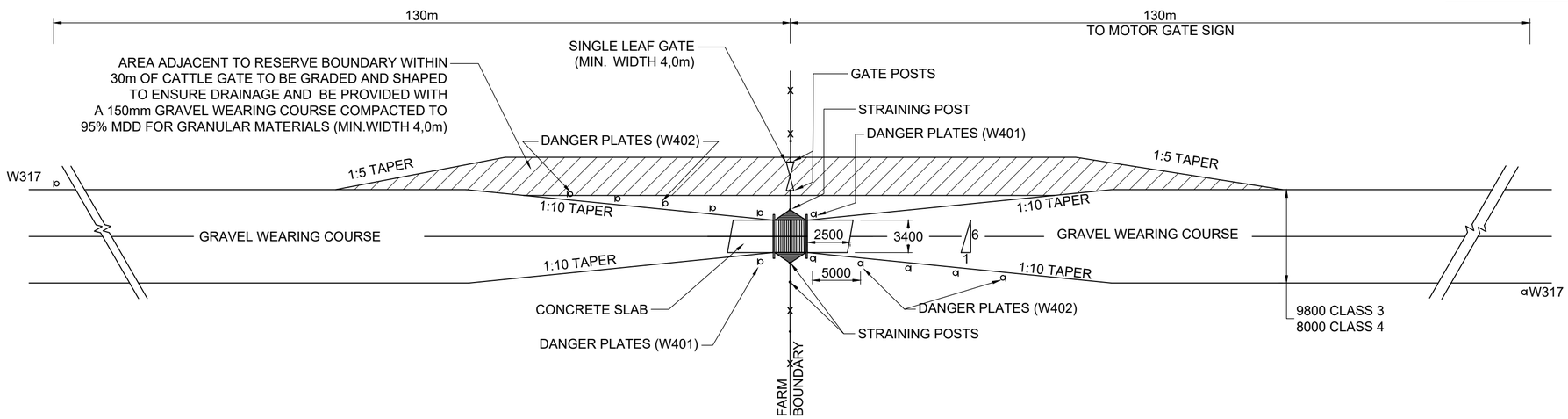

LAYOUT AT FARM BOUNDARIES

No.	DATE	ADDITIONS AND AMENDMENTS
0	OCT - 2023	ORIGINAL VERSION

STANDARD PLANS

WESTERN CAPE GOVERNMENT
DEPARTMENT OF INFRASTRUCTURE
TRANSPORT INFRASTRUCTURE BRANCH

MOTOR GRID GATES

APPROACHES TO SINGLE MOTOR GRID GATE TYPE A

SCALE : N.T.S.

A2 ORIGINAL

INDEX NO.
WCS/55/2/C1

PLAN NO.
SHEET 1 OF 6

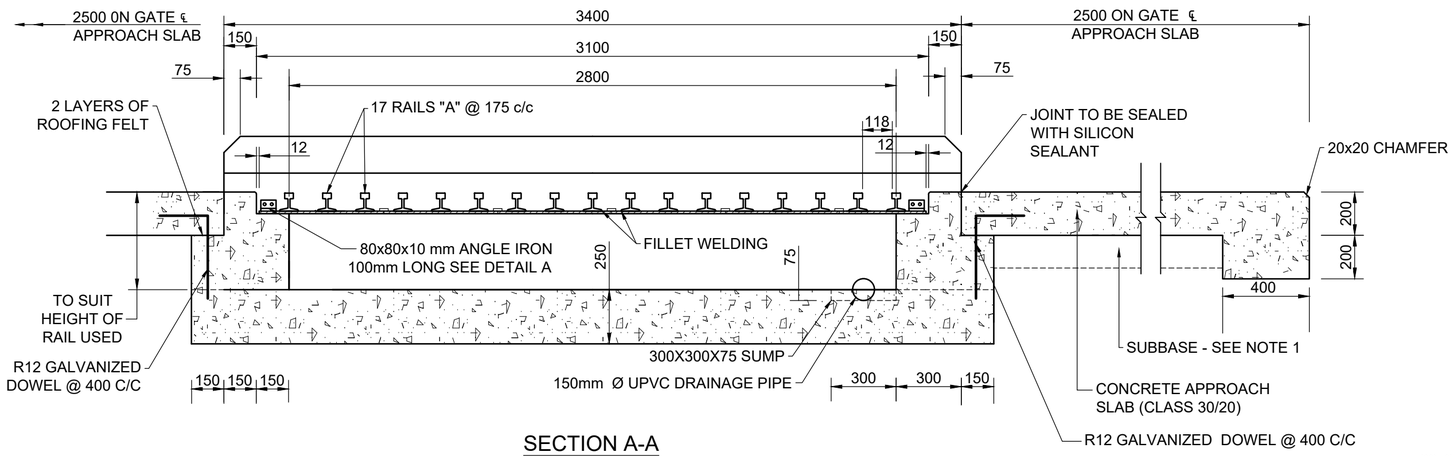

SECTION A-A

NOTES :

1. THE 150mm THICK SUBBASE BELOW THE CONCRETE APPROACH SLAB SHALL COMPLY WITH THE FOLLOWING :

   A) WET MICRO/MACRO CLIMATE
   STABILISED WITH A MINIMUM OF 2% BY MASS (3% BY VOLUME) PORTLAND CEMENT SO AS TO ENSURE AN UNCONFINED COMPRESSION STRENGTH OF 0,75Mpa MIN. AND 3,0Mpa MAX. AT 100% MOD.AASHTO DENSITY AFTER 7 DAYS (C3 TO C4 PER TRH14).

   B) DRY/MODERATE CLIMATE
   UNSTABILISED SUBBASE TO HAVE A MINIMUM CBR OF 45 AT 95% MOD. AASHTO DENSITY AND TO BE COMPACTED TO 97% MOD.AASHTO DENSITY IN SITU.

2. REFER TO DWG. No. WCS/55/2/C4 FOR ALTERNATIVE METHOD OF FIXING RAILS WHEN WELDING PLANT IS NOT AVAILABLE ON SITE.

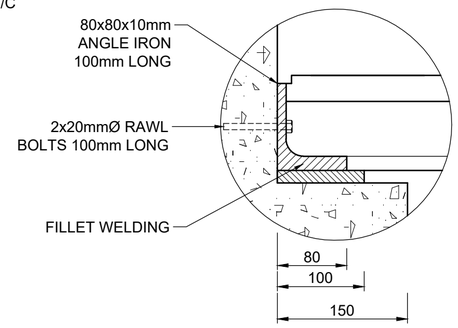

SECTION

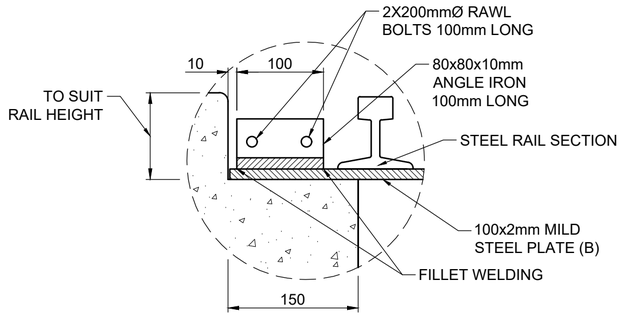

ELEVATION

DETAIL A

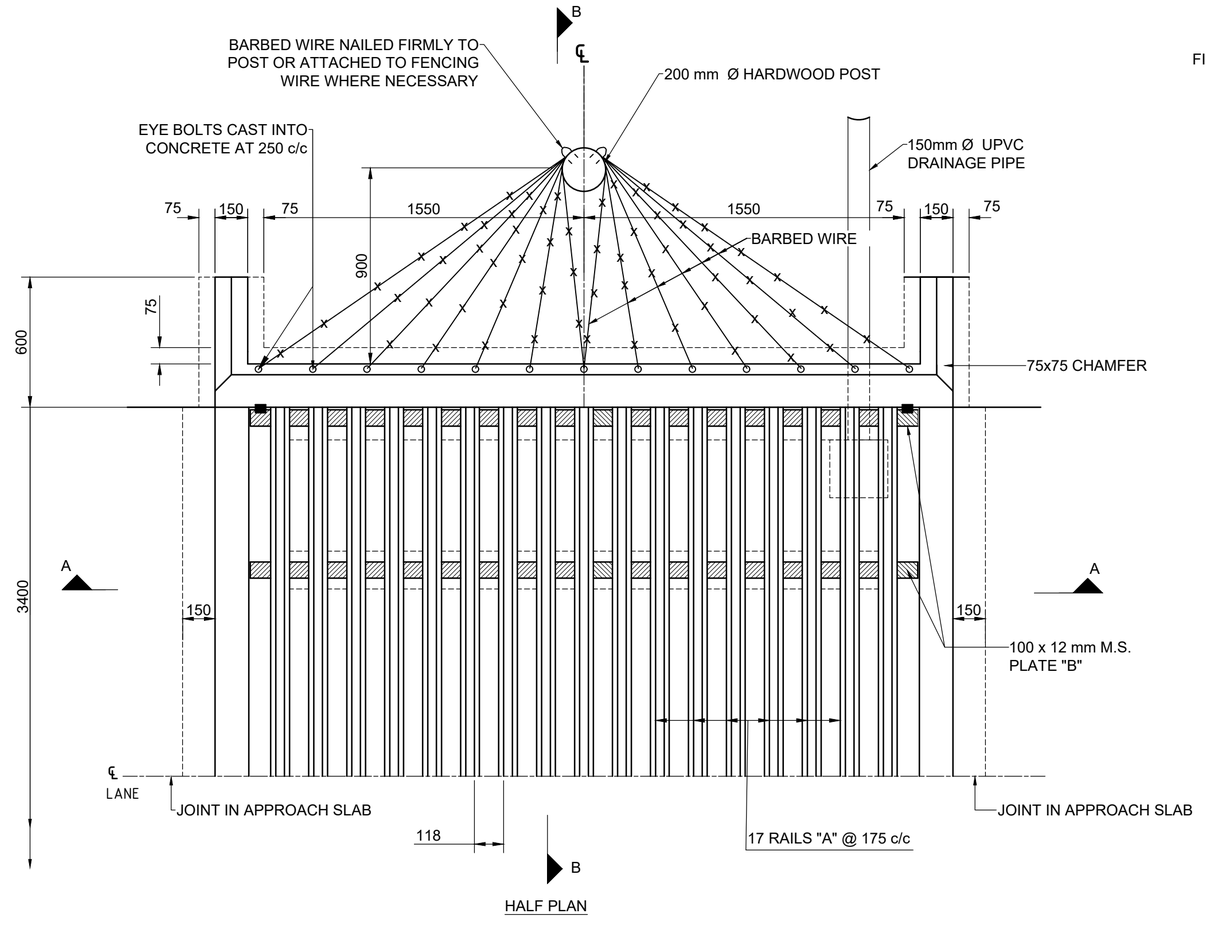

HALF PLAN

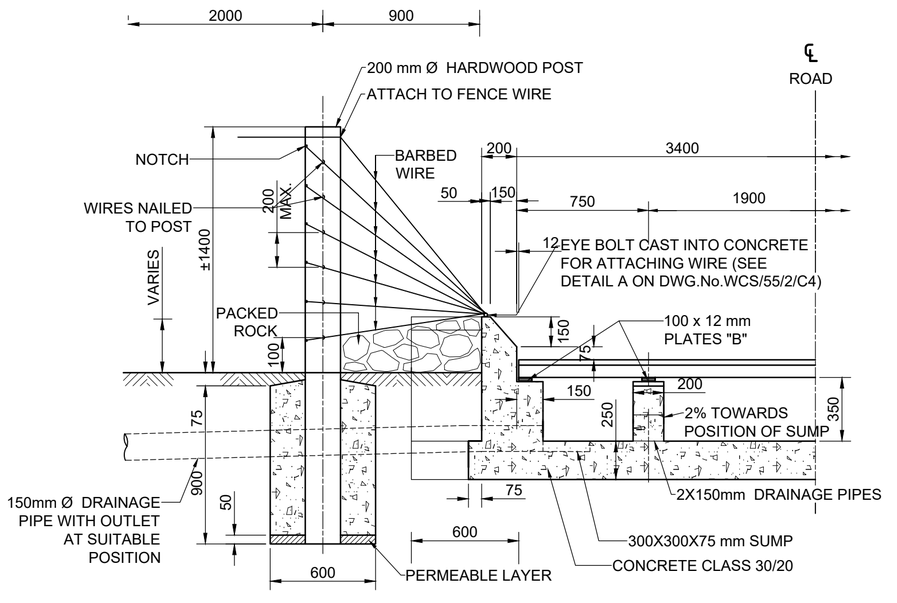

SECTION B-B

No.	DATE	ADDITIONS AND AMENDMENTS
0	OCT - 2023	ORIGINAL VERSION

STANDARD PLANS

WESTERN CAPE GOVERNMENT
DEPARTMENT OF INFRASTRUCTURE
TRANSPORT INFRASTRUCTURE BRANCH

MOTOR GRID GATES

SINGLE MOTOR GRID GATE TYPE A

SCALE : N.T.S.

A2 ORIGINAL

INDEX NO.
WCS/55/2/C2

PLAN NO.
SHEET 2 OF 6

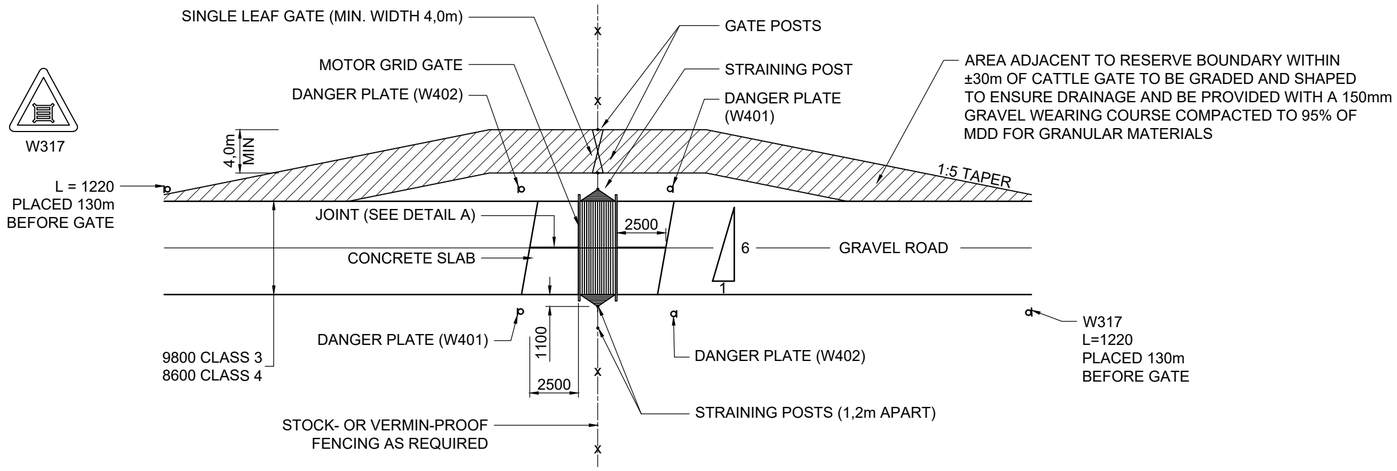

LAYOUT FOR GRAVEL ROADS

NOTES :

1. WHERE PRACTICABLE THE GRID GATE SURFACE IS TO BE INSTALLED AT A SUFFICIENTLY HIGH LEVEL TO FACILITATE DRAINAGE OF PIT. LAY 150mm DIA. PVC PIPE FOR DRAINAGE OF PIT TO NATURAL GROUND LEVEL WHERE NECESSARY.
2. APPROACHES TO BE LEVEL OR ON THE SAME GRADE AS THE GRID ITSELF FOR 6,0m ON EACH SIDE OF GRID GATE AND THEN TO BE SLOPED DOWN GENTLY TO NORMAL ROAD SURFACE.
3. REFER TO DWG. No. WCS/55/2/C4 FOR DETAIL OF DOUBLE MOTOR GRID GATE.

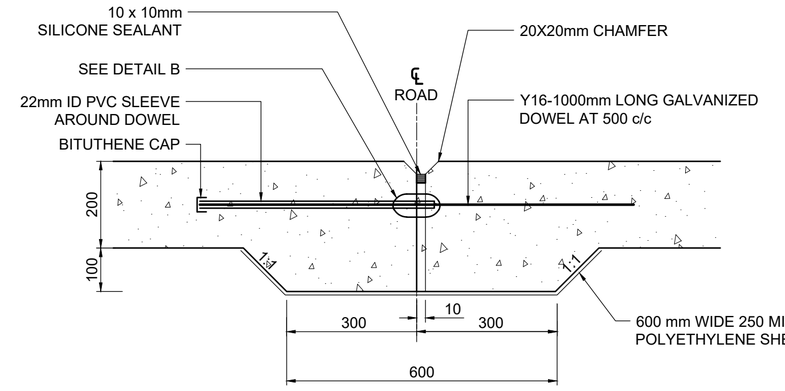

DETAIL A: ROAD SLAB JOINT

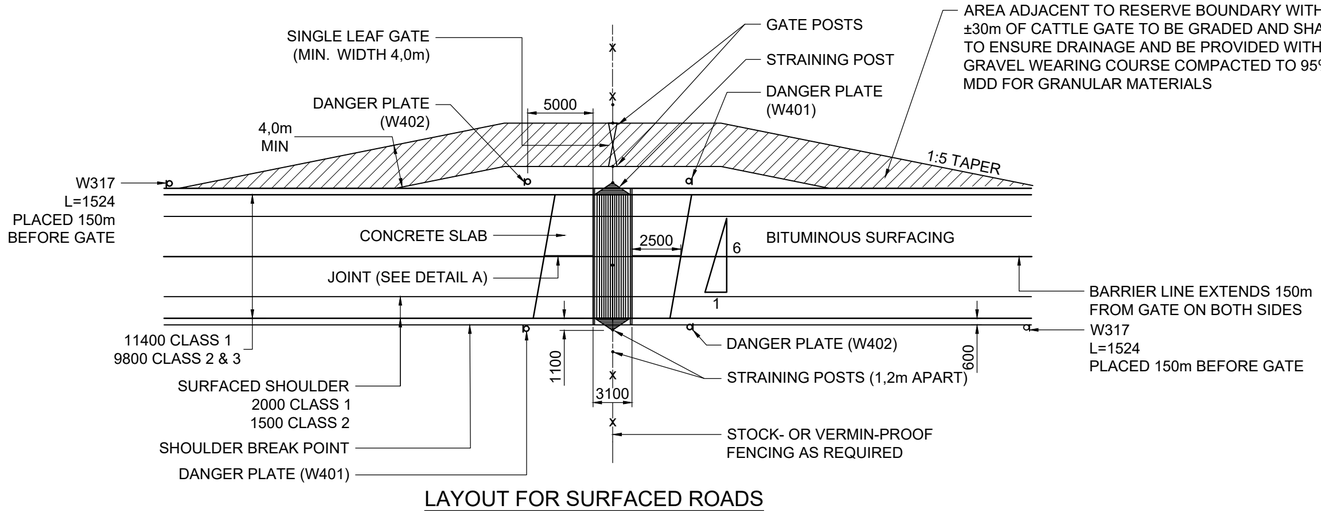

LAYOUT FOR SURFACED ROADS

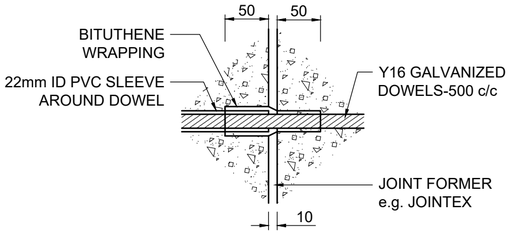

DETAIL B

No.	DATE	ADDITIONS AND AMENDMENTS
0	OCT - 2023	ORIGINAL VERSION

STANDARD PLANS

WESTERN CAPE GOVERNMENT
DEPARTMENT OF INFRASTRUCTURE
TRANSPORT INFRASTRUCTURE BRANCH

MOTOR GRID GATES

APPROACHES TO DOUBLE MOTOR GRID GATE TYPE B

SCALE : N.T.S.

A2 ORIGINAL

INDEX NO. WCS/55/2/C3

PLAN NO. SHEET 3 OF 6

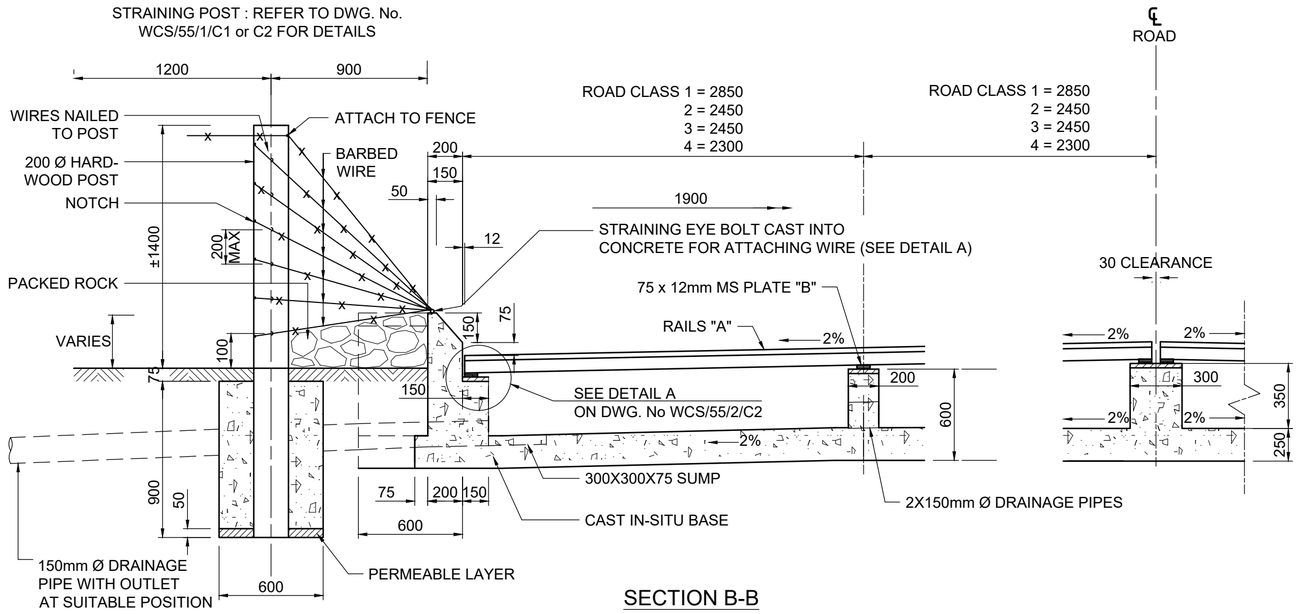

SECTION B-B

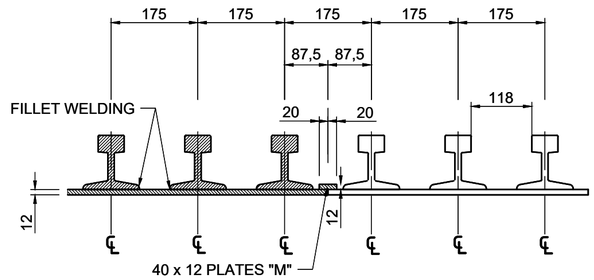

ALTERNATIVE METHOD OF WELDING RAILS
(WHERE MOBILE WELDING PLANT IS NOT AVAILABLE ON SITE)

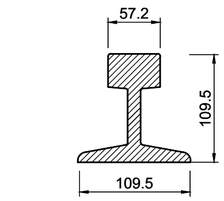

TYPICAL RAIL DETAIL

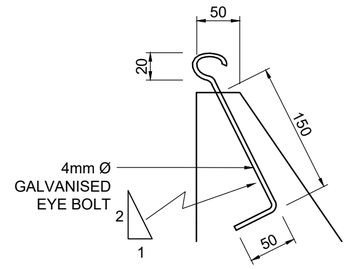

DETAIL A

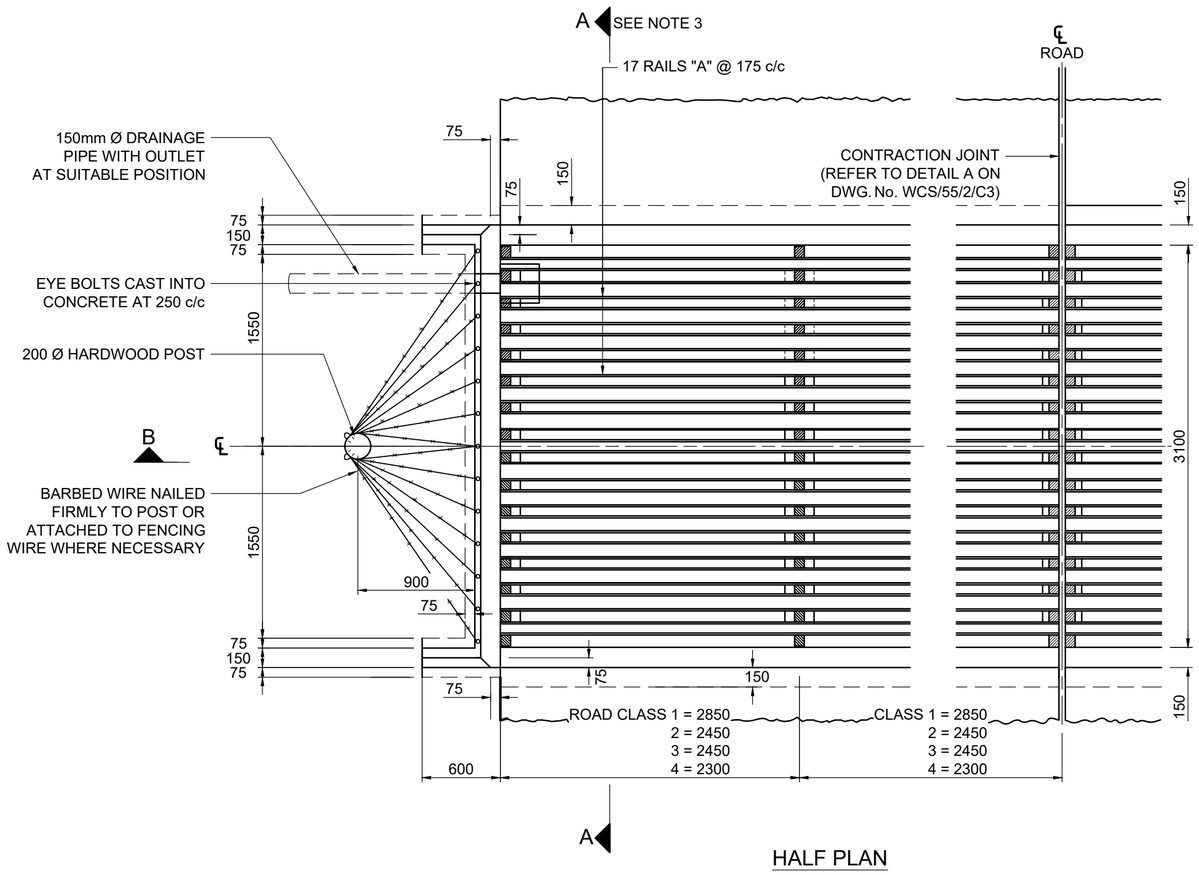

HALF PLAN

NOTES :
1. RAILS TO BE 30kg/m OR HEAVIER.

2. a) WHERE PORTABLE WELDING PLANT IS NOT AVAILABLE ALTERNATIVE METHOD OF FIXING RAILS AS SHOWN TO BE ADOPTED. RAILS WILL BE WELDED IN THE WORKSHOP TO STRIPS OF 75 x 12 FLATS AND TO THE LENGTH SHOWN IN STEEL SCHEDULE SPACED AS SHOWN AND CUT INTO SECTIONS OF 3 RAILS AND BUTTING STRIPS 40 x 12 x 75 (PLATE M) WELDED ON TO ONE SIDE OF THE CUTS IN THE 75 x 12 FLATS TO PREVENT RAIL SECTIONS JUMPING INTO EACH OTHER.

   b) WHERE PORTABLE WELDING PLANT IS AVAILABLE, ALL WELDING TO BE DONE WITH PLATES AND RAILS IN POSITION.

3. FOR SECTION A-A REFER TO DWG. No. WCS/55/2/C2.

STEEL SCHEDULE

DESCRIPTION	ITEM	SIZE	TYPE A		TYPE B (SURFACED)						TYPE B (GRAVEL)				SHAPE
			CLASS 3 & 4		CLASS 1		CLASS 2		CLASS 3		CLASS 3		CLASS 4		
			No.	LENGTH	No.	LENGTH	No.	LENGTH	No.	LENGTH	No.	LENGTH	No.	LENGTH	
RAILS	A	30kg/m MIN	17	3376	34	5673	34	4873	34	4873	34	4873	34	4573	STRAIGHT LENGTH
MILD STEEL PLATES	B	75x12	4	3076	6	3076	6	3076	6	3076	6	3076	6	3076	STRAIGHT LENGTH
MILD STEEL PLATES	M	40x12	10	75	25	75	25	75	25	75	25	75	25	75	STRAIGHT LENGTH

No.	DATE	ADDITIONS AND AMENDMENTS
0	OCT - 2023	ORIGINAL VERSION

STANDARD PLANS

WESTERN CAPE GOVERNMENT
DEPARTMENT OF INFRASTRUCTURE
TRANSPORT INFRASTRUCTURE BRANCH

MOTOR GRID GATES

DETAIL OF DOUBLE MOTOR GRID GATE TYPE B

SCALE : N.T.S.

A2 ORIGINAL

INDEX NO.
WCS/55/2/C4

PLAN NO.
SHEET 4 OF 6

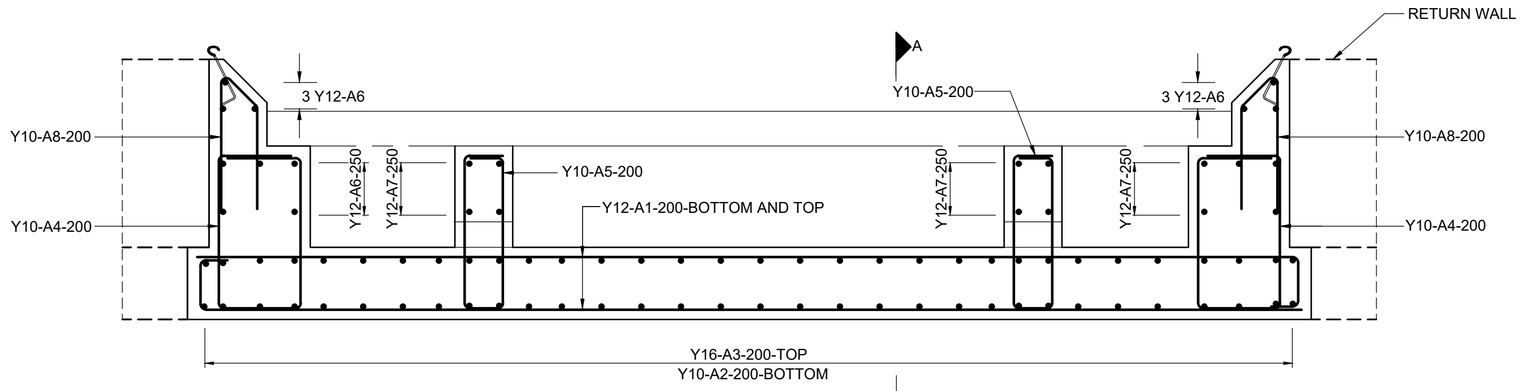

TYPE A

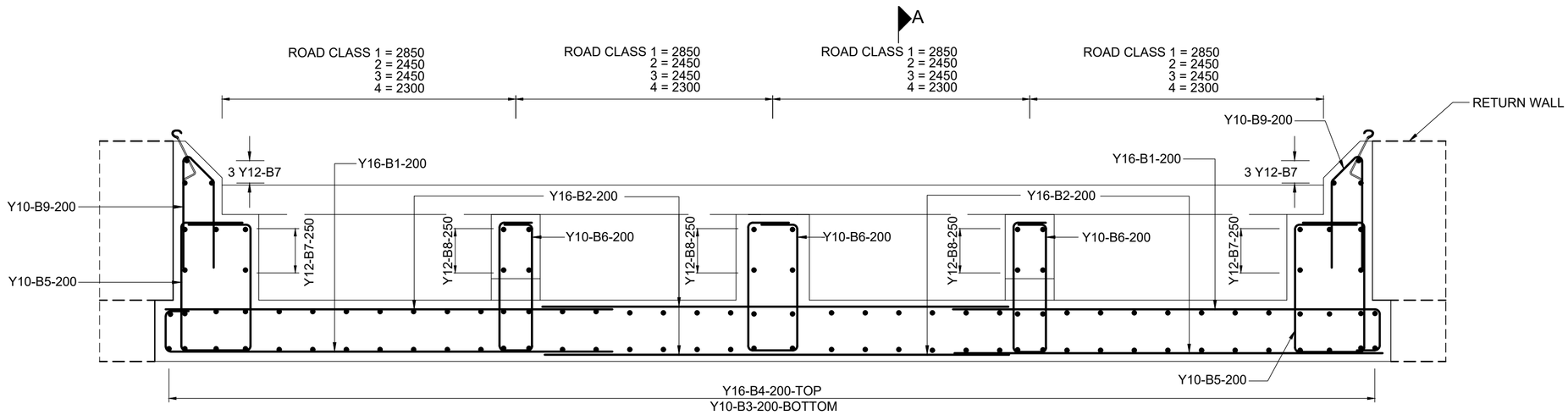

TYPE B

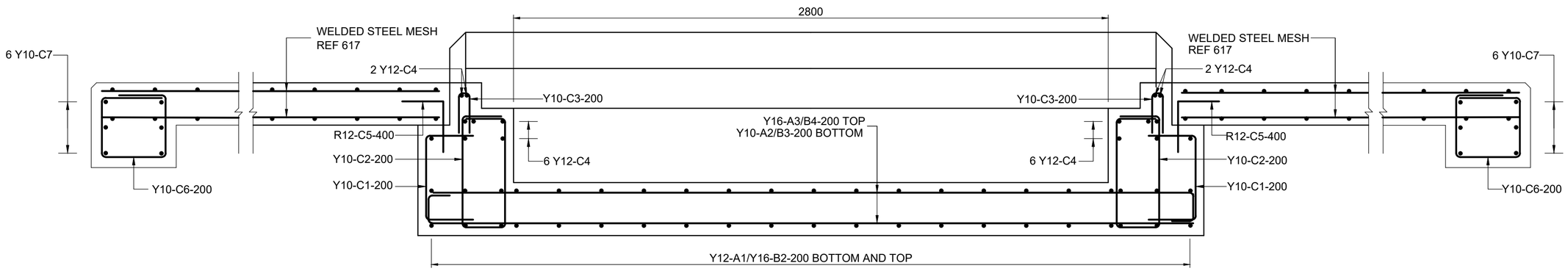

TYPICAL SECTION A-A

NOTES :

1. REFER TO DWG. No. WCS/55/2/C6 FOR STEEL SCHEDULE AND RETURN WALL REINFORCEMENT DETAILS

No.	DATE	ADDITIONS AND AMENDMENTS
0	OCT - 2023	ORIGINAL VERSION

STANDARD PLANS

WESTERN CAPE GOVERNMENT
DEPARTMENT OF INFRASTRUCTURE
TRANSPORT INFRASTRUCTURE BRANCH

MOTOR GRID GATES

REINFORCEMENT DETAILS OF SLAB TYPE A AND B

SCALE : N.T.S.

A2 ORIGINAL

INDEX NO.
WCS/55/2/C5

PLAN NO.
SHEET 5 OF 6

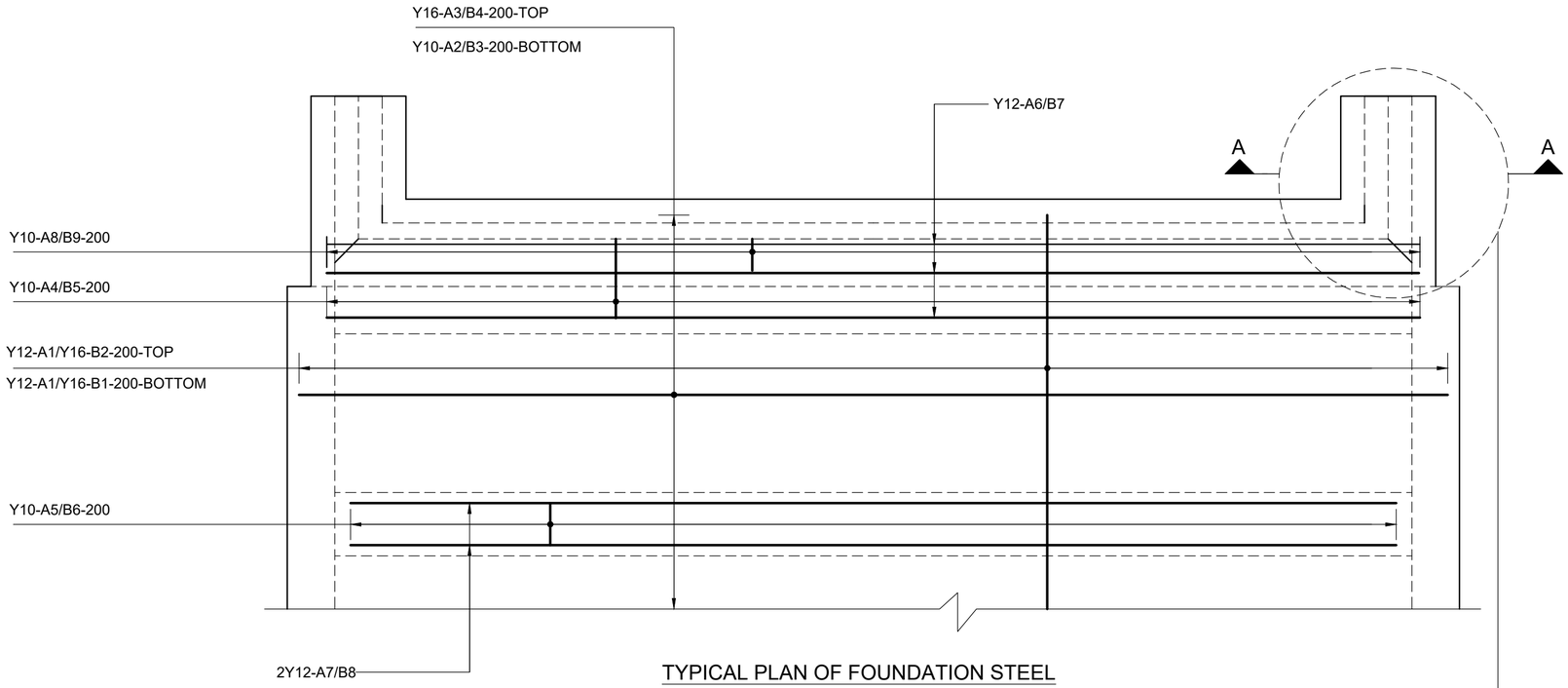

TYPICAL PLAN OF FOUNDATION STEEL

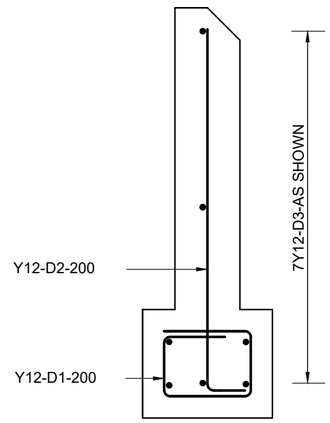

SECTION A-A

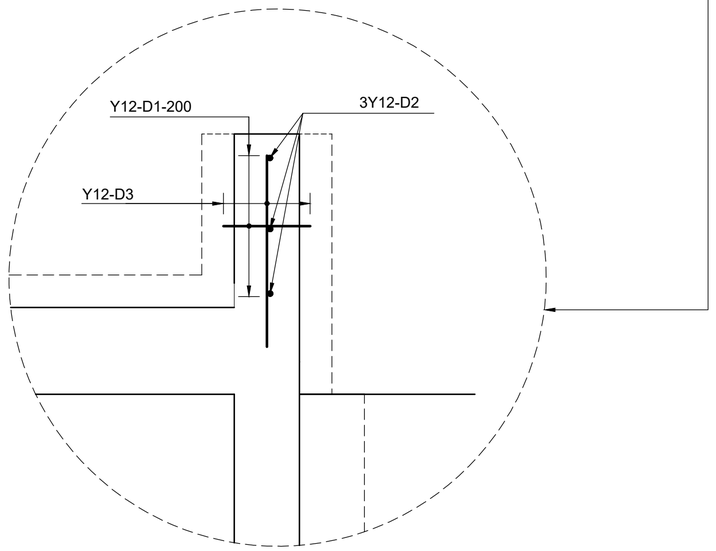

STEEL SHAPE CODES				
20	37	38	60	99
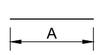	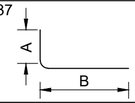	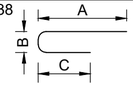	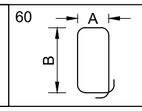	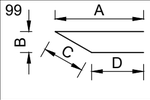

NOTES :

1. MATERIAL SPECIFICATIONS:
   - CONCRETE CLASS : 30/20 THROUGHOUT OR AS SPECIFIED
   - MINIMUM CEMENTITIOUS CONTENT = 300 kg/m^3
   - STEEL REINFORCEMENT : HIGH TENSILE STEEL 450 MPa
2. CONCRETE FINISH
   - NON VISIBLE SURFACES F1
   - VISIBLE SURFACES F2
   - UNIFORMED SURFACES U2
3. ALL EXPOSED SHARP EDGES TO HAVE 20 x 20 CHAMFERS.
4. CONCRETE COVER = 50mm.

		STEEL SCHEDULE									
		BAR MARK	SHAPE CODE	NO.	DIA.	SPACING	A	B	C	D	TOTAL LENGTH
TYPE A	CLASS 3,4	A1	38	42	Y12	200	3850	150	100		4050
		A2	38	32	Y10	200	3600	150	100		3800
		A3	38	32	Y16	200	3600	150	100		3750
		A4	60	36	Y10	200	250	500			1550
		A5	60	36	Y10	200	100	500			1350
		A6	20	16	Y12	250	3300				3300
		A7	20	8	Y12	200	2700				2700
		A8	99	36	Y10	200	400	100	140	300	840
		C1	38	36	Y10	200	220	420	220		800
		C2	60	36	Y10	200	200	500			1500
		C3	38	36	Y10	200	200	50	200		400
		C4	20	16	Y12		3300				3300
		C5	37	20	R12	400	400	400			800
		C6	60	40	Y10	200	300	300			1200
		C7	20	24	Y10		1600				1600
		D1	60	12	Y12	200	150	200			800
		D2	37	12	Y12	200	100	800			850
		D3	20	28	Y12		750				750
TYPE B	CLASS 1	B1	38	42	Y16	200	4400	150	100		4600
	CLASS 2,3						3900	150	100		4100
	CLASS 4						3650	150	100		3850
	CLASS 1	B2	20	84	Y16	200	4400				4600
	CLASS 2,3						3900				3900
	CLASS 4						3650				3650
	CLASS 1	B3	38	70	Y10	200	3600	150	100		3800
	CLASS 2,3			62							
	CLASS 4			59							
	CLASS 1	B4	38	70	Y16	200	3600	150	100		3750
	CLASS 2,3			62							
	CLASS 4			59							
		B5	60	36	Y10	200	250	500			1550
		B6	60	36	Y10	200	100	500			1350
		B7	20	16	Y12	250	3300				3300
		B8	20	12	Y12	200	2700				2700
		B9	99	36	Y10	200	400	100	140	300	840
	CLASS 1	C1	38	116	Y10	200	220	420	220		800
	CLASS 2,3			100							
	CLASS 4			94							
	CLASS 1	C2	60	116	Y10	200	200	500			1500
	CLASS 2,3			100							
	CLASS 4			94							
	CLASS 1	C3	38	116	Y10	200	200	50	200		400
	CLASS 2,3			100							
	CLASS 4			94							
	CLASS 1	C4	20	32	Y12		4250				4250
	CLASS 2,3						3700				3700
	CLASS 4						3500				3500
	CLASS 1	C5	37	60	R12	400	400	400			800
	CLASS 2,3			52							
	CLASS 4			48							
	CLASS 1	C6	60	120	Y10	200	300	300			800
	CLASS 2,3			104							
	CLASS 4			96							
	CLASS 1	C7	20	24	Y10		5600				5600
	CLASS 2,3						4800				4800
	CLASS 4						4500				4500
		D1	60	12	Y12	200	150	200			800
		D2	37	12	Y12	200	100	800			850
		D3	20	28	Y12		750				750

No.	DATE	ADDITIONS AND AMENDMENTS
0	OCT - 2023	ORIGINAL VERSION

STANDARD PLANS

WESTERN CAPE GOVERNMENT
DEPARTMENT OF INFRASTRUCTURE
TRANSPORT INFRASTRUCTURE BRANCH

MOTOR GRID GATES

REINFORCEMENT DETAILS AND BENDING SCHEDULE

SCALE : N.T.S.

A2 ORIGINAL

INDEX NO.
WCS/55/2/C6

PLAN NO.
SHEET 6 OF 6

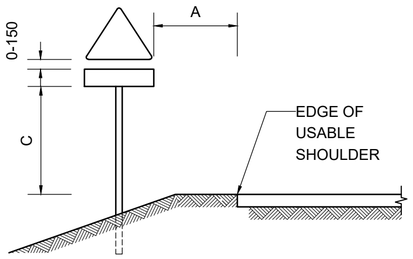

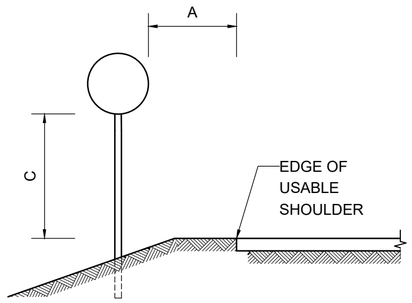

SHOULDER (NO KERB)

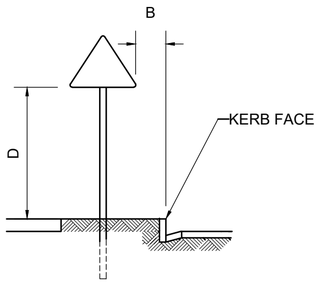

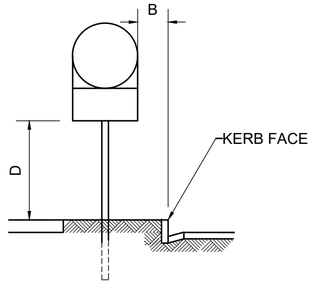

WITH KERB AND SIDEWALK

REGULATORY AND WARNING SIGNS

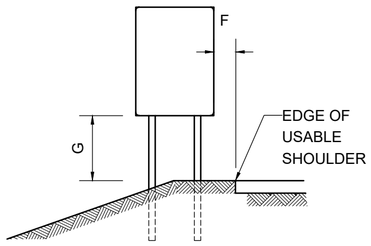

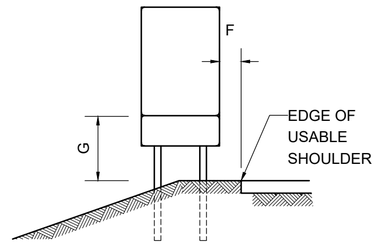

DIAGRAMMATIC SIGN

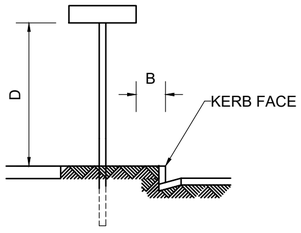

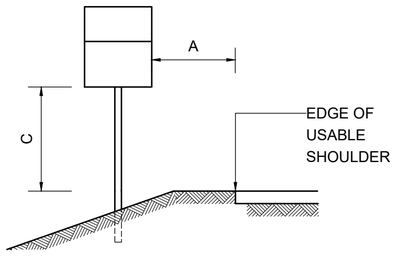

LOCATION AND ROUTE MARKER SIGNS

SMALL TO MEDIUM SIZED GUIDANCE AND INFORMATION SIGNS

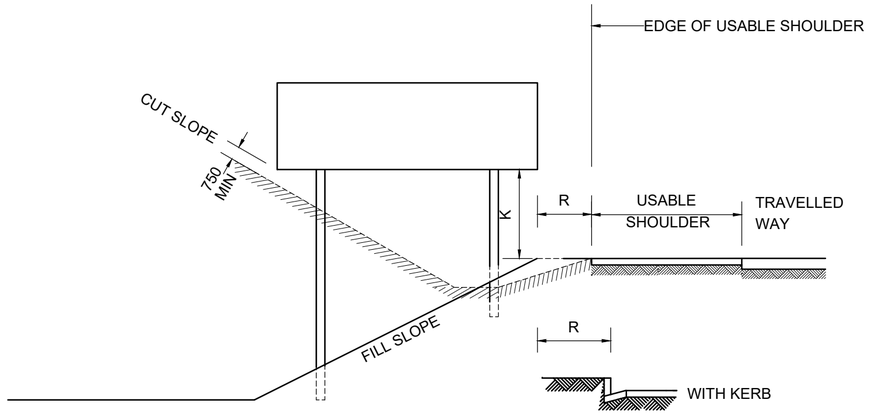

LARGER GUIDANCE SIGNS

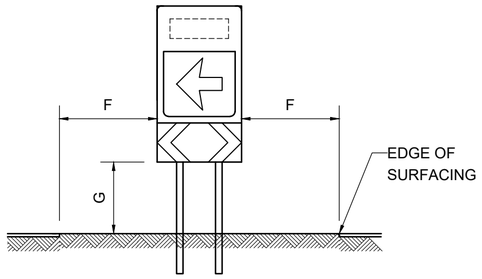

ELEVATION

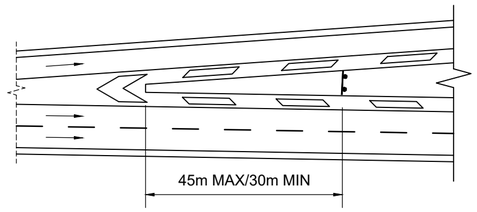

PLAN

GROUND - MOUNTED GORE SIGN

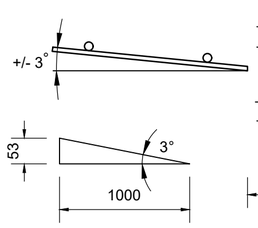

SETTING OUT

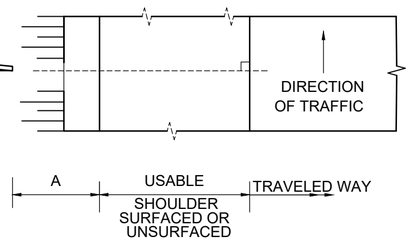

PLAN

TYPICAL DIRECTION SIGN

PERMANENT SIGN PLACEMENT DIMENSIONS			
POSITIONING		PREFERRED (mm)	RANGE (mm)
VERTICAL	LATERAL		
	A	1500	1200-2000
	B	750	500 -
C		2100	600-2500
D		2500	2100-3000
	F	1500	1200-2000
G		1200	800-1600
K		2000	1600-2400
	R	2500	1500-

No.	DATE	ADDITIONS AND AMENDMENTS
0	OCT - 2023	ORIGINAL VERSION

STANDARD PLANS

WESTERN CAPE GOVERNMENT
DEPARTMENT OF INFRASTRUCTURE
TRANSPORT INFRASTRUCTURE BRANCH

ROAD SIGNS

GROUND MOUNTED SIGNS - POSITIONS

SCALE : N.T.S.

A2 ORIGINAL

INDEX NO.
WCS/56/1/C1

PLAN NO.
SHEET 1 OF 9

HORIZONTAL REINFORCING				
HEIGHT OF SIGN H	NO. OF HORIZONTAL REINFORCING PROFILES PER SUPPORT (R)	DIMENSIONS		
		J	K	K MAX.
LESS THAN 900	2	H/5	3H/5	550
900 - 1 200	3	H/8	3H/8	550
1 200 - 1 500	3	H/8	3H/8	600
1 500 - 2 100	3	H/8	3H/8	800
2 100 - 2 900	4	H/11	3H/11	800
2 900 - 3 700	5	H/14	3H/14	800
3 700 - 4 500	6	H/17	3H/17	800

NOTES :

1. VERTICAL REINFORCING TO BE 6mm LESS THAN SIGN HEIGHT AND CENTERED.
   THE VERTICAL REINFORCING PROFILE TO BE USED IS AS FOLLOWS :
   H < 3,5m : 41,3 x 20,6 x 1,6
   H > 3,5m : 41,3 x 41,3 x 1,6

2. THE HORIZONTAL REINFORCING PROFILE TO BE USED IS AS FOLLOWS :
   H < 1,5m : 41,3 x 20,6 x 1,6
   H > 1,5m : 41,3 x 41,3 x 1,6

3. ALL REINFORCING PROFILES TO BE GALVANIZED (Z275).

4. APPLY GALVANIZING PAINT WHERE REINFORCING PROFILES ARE CUT.

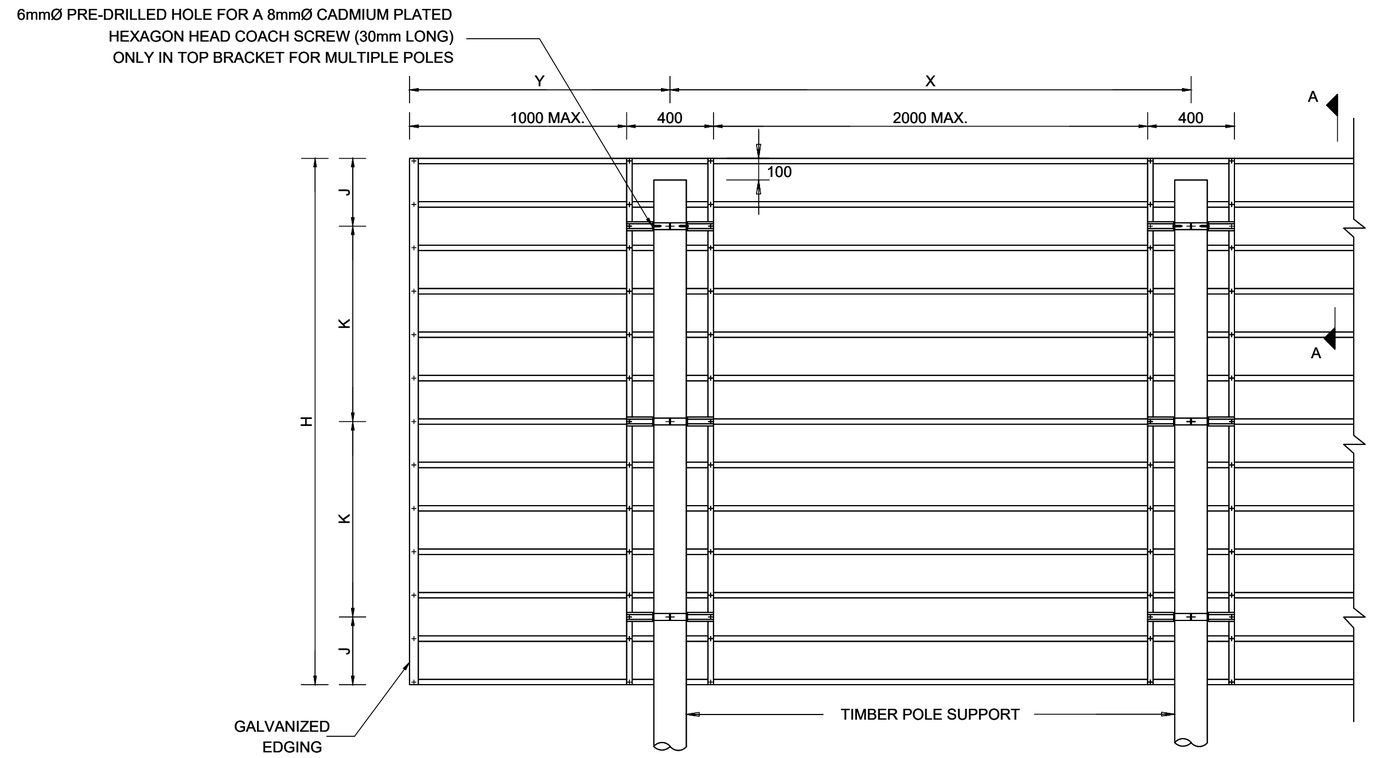

REAR ELEVATION

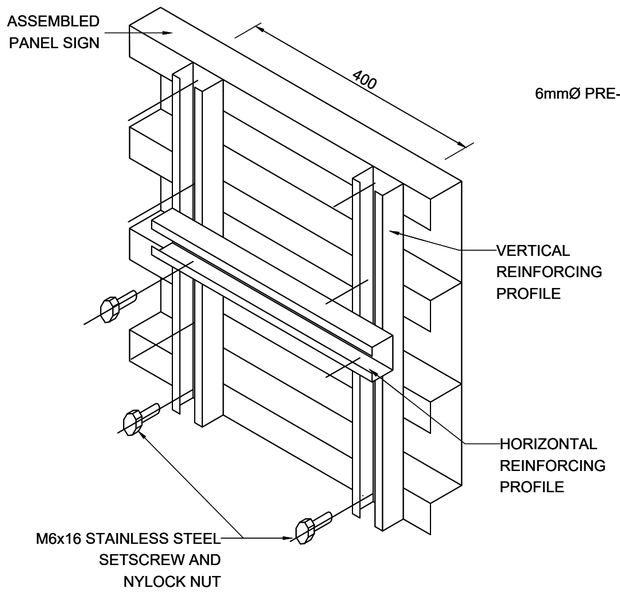

REINFORCING LADDER CONSTRUCTION

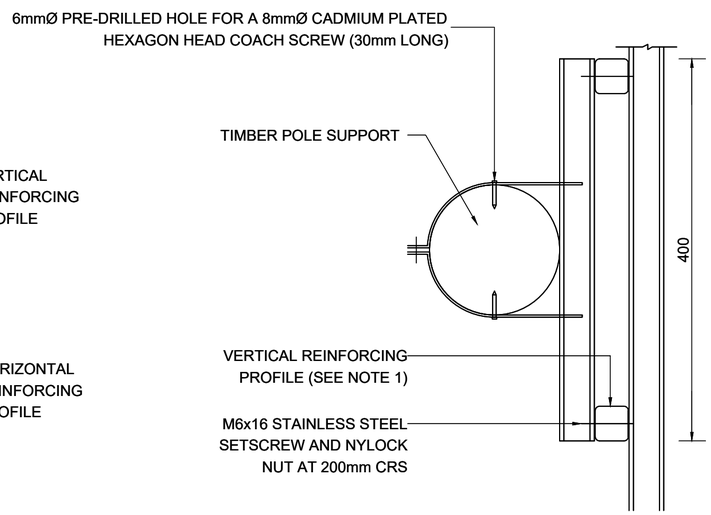

SECTION B-B

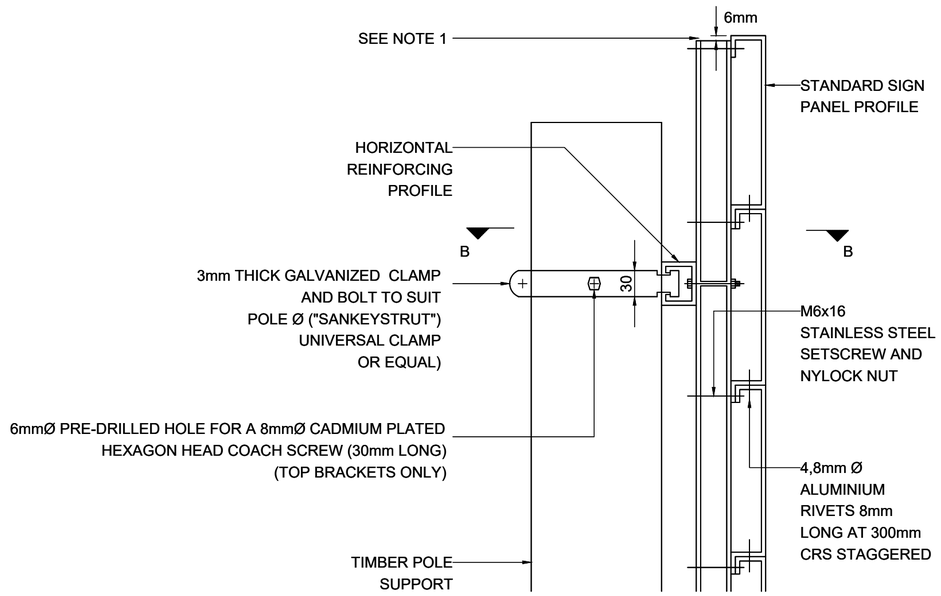

SECTION A-A

No.	DATE	ADDITIONS AND AMENDMENTS
0	OCT - 2023	ORIGINAL VERSION

STANDARD PLANS

WESTERN CAPE GOVERNMENT
DEPARTMENT OF INFRASTRUCTURE
TRANSPORT INFRASTRUCTURE BRANCH

ROAD SIGNS

GROUND MOUNTED SIGNS - MOUNTING DETAILS

SCALE : N.T.S.

A2 ORIGINAL

INDEX NO. WCS/56/1/C2

PLAN NO. SHEET 2 OF 9

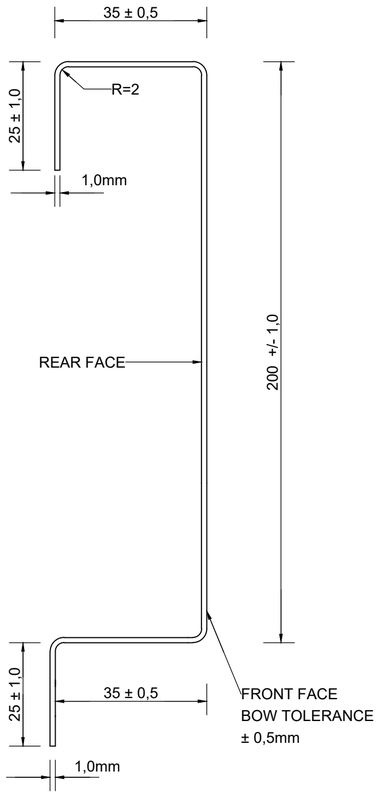

STANDARD SIGN PANEL PROFILE

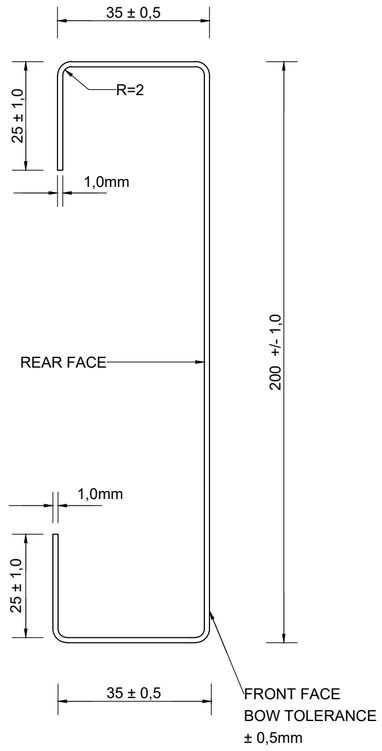

BOTTOM SIGN PANEL PROFILE

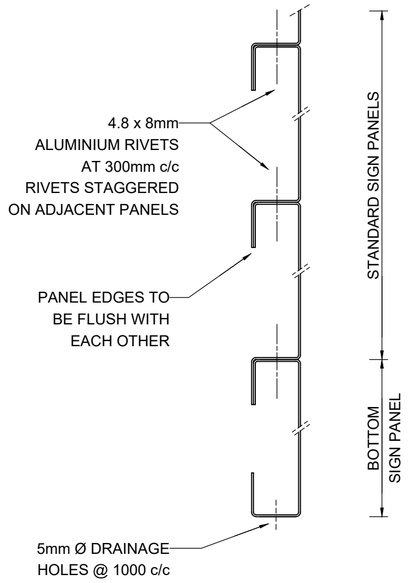

SECTION A-A

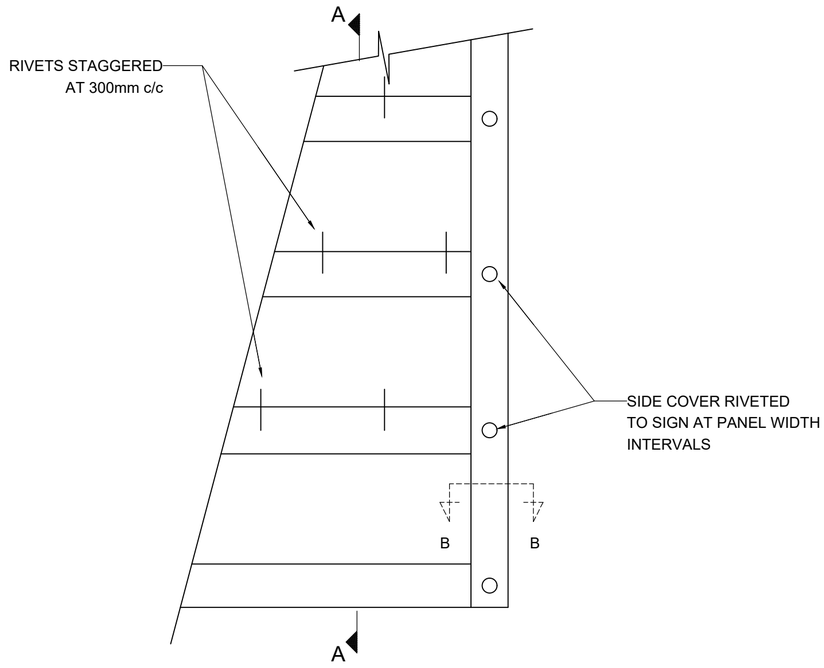

REAR ELEVATION

NOTES ON PANEL :

1. PANEL SUBSTRATE : 320 x 1mm CHROMADEK.
2. MAXIMUM BENDING RADIUS : 2,5mm
3. TOLERANCES i) PANEL HEIGHT : 200mm + 1,0mm
   ii) PANEL LENGTH : 2mm/1000mm PANEL
4. WHEN REQUIRED, REFLECTIVE SHEETING MUST BE APPLIED IN 230mm WIDE STRIPS (15mm OVERLAP ON EITHER SIDE) WITH AN APPROVED APPLICATOR.
5. PANELS TO BE MANUFACTURED IN SINGLE LENGTHS UP TO 6000mm. LONGER SIGNS MAY BE JOINED - REFER TO DWG. No. WCS/56/1/C5.

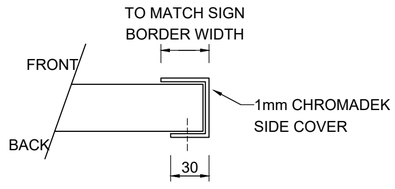

SECTION B-B

NOTES ON SIDE COVER :

1. SIDE COVER MANUFACTURED FROM 1mm CHROMADEK.
2. SIDE COVER COLOUR TO MATCH BACKGROUND COLOUR OF SIGN FACE.
3. SIDE COVER LENGTH TOLERANCE :
   - SIGN HEIGHT + 0mm
   - SIGN HEIGHT - 6mm
4. SIDE COVER CORNERS TO BE LESS THAN 88° TO ENSURE A TIGHT FIT TO SIGN PANELS.
5. ALL SIGNS MANUFACTURED FROM PANELS MUST BE FITTED WITH SIDE COVERS.

No.	DATE	ADDITIONS AND AMENDMENTS
0	OCT - 2023	ORIGINAL VERSION

STANDARD PLANS

WESTERN CAPE GOVERNMENT
DEPARTMENT OF INFRASTRUCTURE
TRANSPORT INFRASTRUCTURE BRANCH

ROAD SIGNS

LARGER SIGNS - PANEL DETAILS

SCALE : N.T.S.

A2 ORIGINAL

INDEX NO. WCS/56/1/C3

PLAN NO. SHEET 3 OF 9

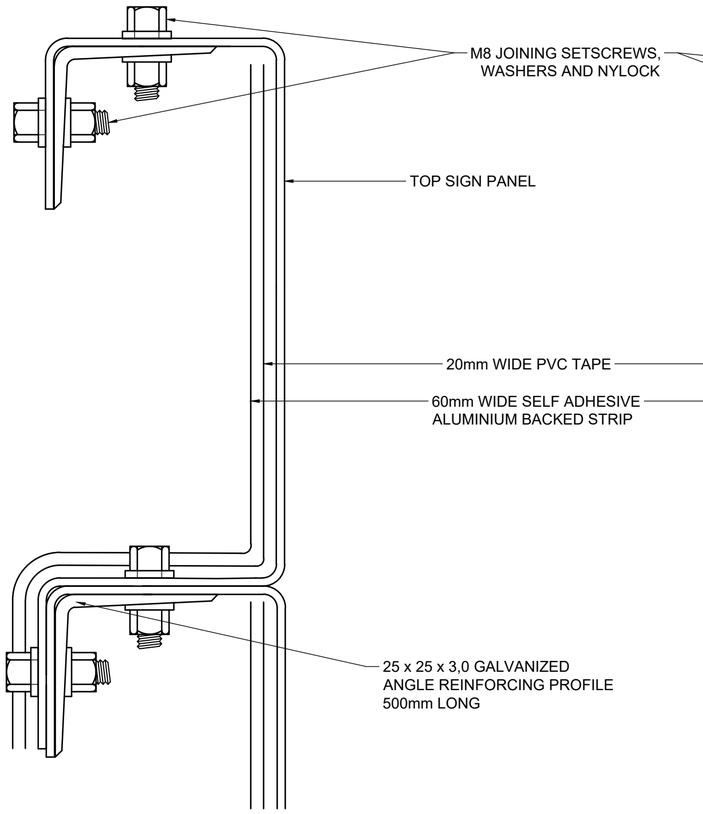

DETAIL A

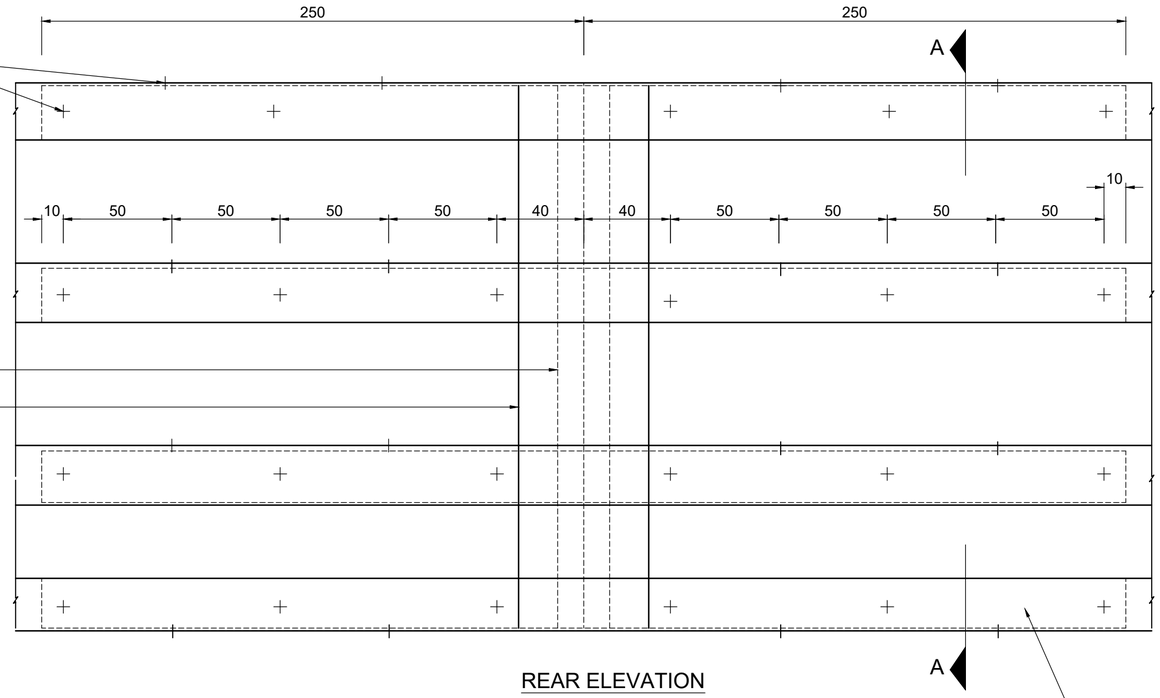

REAR ELEVATION

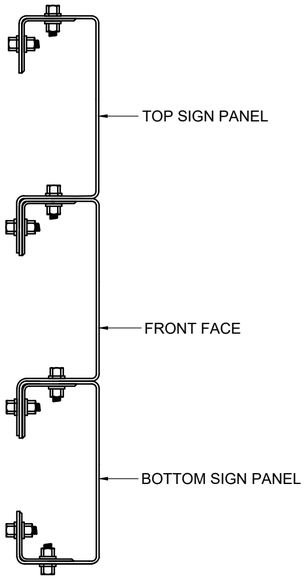

SECTION A-A

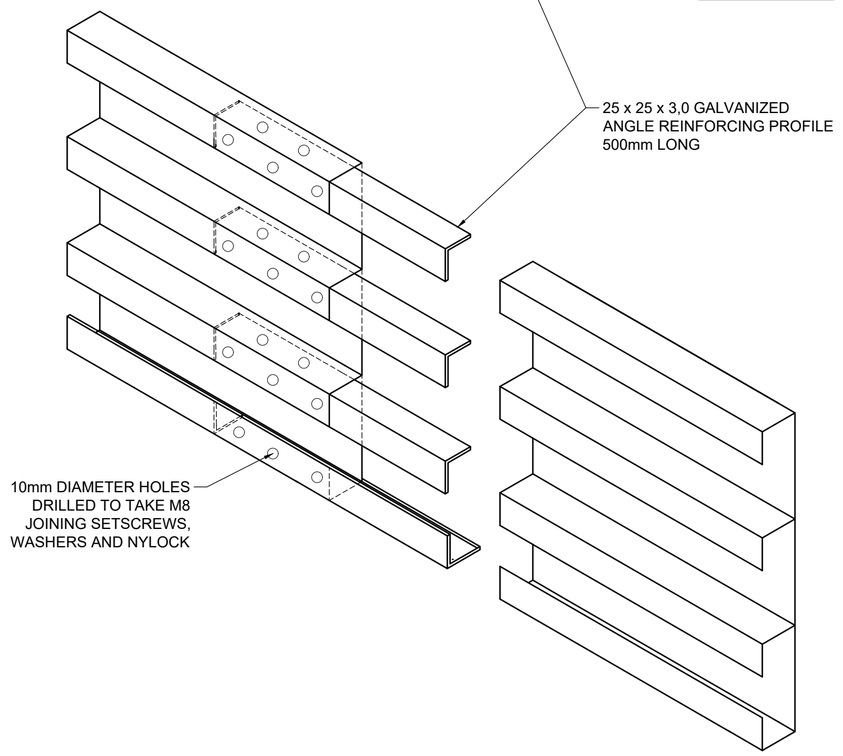

NOTES :

1. ALL SIGN JOINTS TO BE APPROVED BY ENGINEER.
2. SIGN SECTIONS SHALL BE MANUFACTURED AS TWO SEPERATE SIGNS COMPLETE WITH REINFORCING LADDER CONSTRUCTION.
3. THE JOINT SHALL BE ACCURATELY ALIGNED PRIOR TO DRILLING OF 10mm Ø HOLES TO TAKE M8 JOINING SETSCREWS. THE GAP BETWEEN THE ADJOINING SECTION OF THE SIGN SHALL AT NO POINT EXCEED 2mm.
4. THE COMPLETED SECTIONS SHALL BE COMPLETELY ASSEMBLED AND JOINED IN THE FACTORY / SHOP BEFORE APPLYING THE LEGEND AND PRIOR TO DELIVERY TO SITE TO ENSURE THAT ALL SECTIONS FIT TOGETHER PROPERLY AND THAT LEGENDS ARE PROPERLY SPACED AND ALIGNED.
5. AT SITE THE TWO SECTIONS SHALL AGAIN BE ALIGNED AND FASTENED TOGETHER WITH M8 JOINING SETSCREWS PLACED IN THE PRE-DRILLED HOLES. AFTER ERECTION THE FOLLOWING SELF-ADHESIVE TAPES SHALL BE APPLIED TO BACK OF JOINT OVER THE HEIGHT OF THE SIGN :
   - 20mm WIDE PVC TAPE ("3M SCOTCHWRAP 50" OR EQUAL)
   - 60mm WIDE SELF ADHESIVE ALUMINIUM BACKED STRIP 240mm LONG FOR WATERTIGHT SEAL ("BOSTIK DIT-SIT" OR EQUAL)

No.	DATE	ADDITIONS AND AMENDMENTS
0	OCT - 2023	ORIGINAL VERSION

STANDARD PLANS

WESTERN CAPE GOVERNMENT
DEPARTMENT OF INFRASTRUCTURE
TRANSPORT INFRASTRUCTURE BRANCH

ROAD SIGNS

LARGER SIGNS - PANEL JOINT DETAIL

SCALE : N.T.S.

A2 ORIGINAL

INDEX NO.
WCS/56/1/C4

PLAN NO.
SHEET 4 OF 9

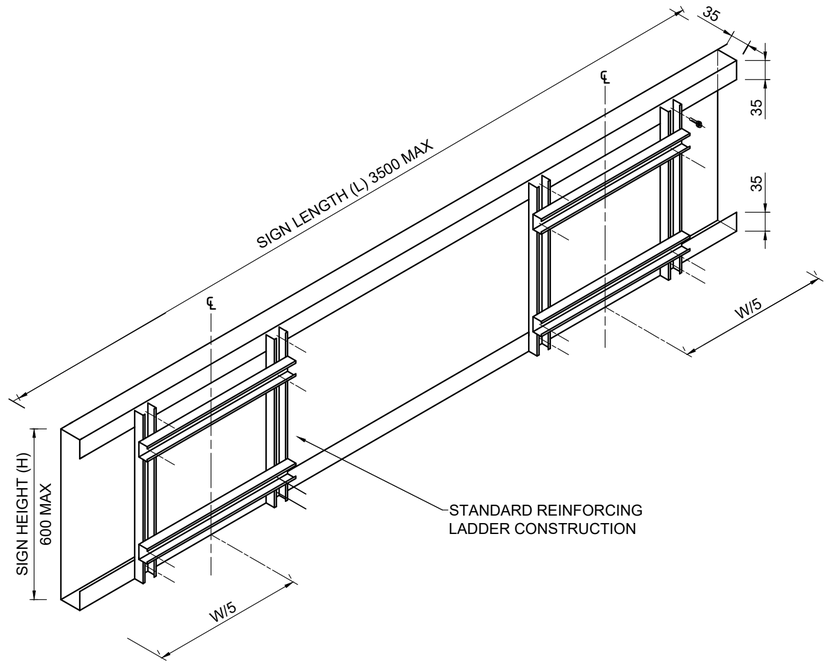

REAR ELEVATION

NOTES :

1. SIGN CONSTRUCTION FROM 1,4mm CHROMADEK.
2. REINFORCED LADDER CONSTRUCTED FROM GALVANIZED PROFILE 41,6 X 20,6 x 1,6mm. VERTICAL REINFORCING PROFILE TO BE 6mm LESS THAN SIGN HEIGHT.
3. DETAIL APPLICABLE TO HAZARD MARKER SIGNS (W407-W410),LOCATION SIGNS (GL2-GL8) (GD1-GD4) AND INFORMATION SIGNS (IN11,1-IN11,5) WITH SIZES WITHIN THE ABOVE DIMENSIONAL RESTRICTIONS.
4. REFER TO THE SADC-RTSM LATEST EDITION FOR DETAIL OF THE SIGN SIZES.

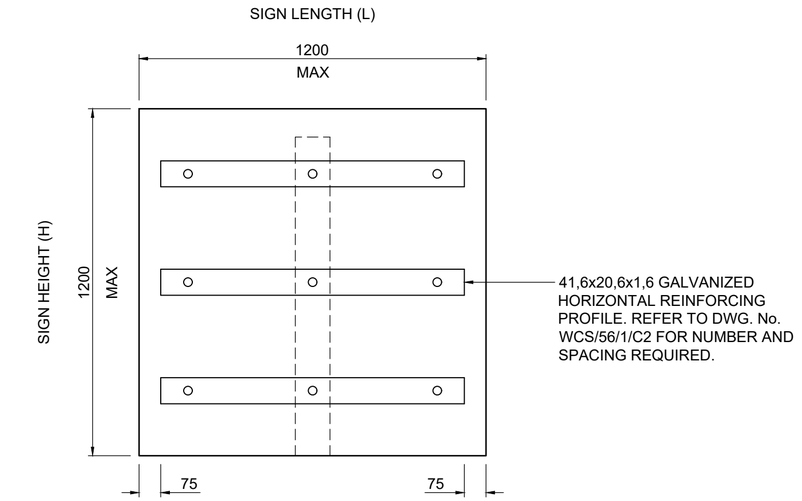

REAR ELEVATION

NOTES:

1. SIGN CONSTRUCTION FROM 1,4mm CHROMADEK.
2. IF REQUIRED, REFLECTIVE SHEETING MUST HAVE A 15mm OVERLAP ON ALL SIDES.
3. DETAIL APPLICABLE TO INFORMATION SIGNS (IN1-IN6,IN8-IN10,IN12-IN19),SHARP CURVE CHEVRONS (W405,W406) AND LOCATION SIGNS (GE1-GE17) WITH SIZES WITHIN THE ABOVE DIMENSIONAL RESTRICTIONS.
4. REFER TO THE SADC-RTSM LATEST EDITION FOR DETAIL OF THE SIGN SIZES.
5. ALUMINIUM RIVETS (4,8mm DIAMETER, 8mm LONG) AT 200mm MAXIMUM CENTRES WITH A MINIMUM OF 3 PER REINFORCING PROFILE.

No.	DATE	ADDITIONS AND AMENDMENTS
0	OCT - 2023	ORIGINAL VERSION

STANDARD PLANS

WESTERN CAPE GOVERNMENT
DEPARTMENT OF INFRASTRUCTURE
TRANSPORT INFRASTRUCTURE BRANCH

ROAD SIGNS

SMALLER SIGNS - PANEL REINFORCING DETAIL

SCALE : N.T.S.

A2 ORIGINAL

INDEX NO.
WCS/56/1/C5

PLAN NO.
SHEET 5 OF 9

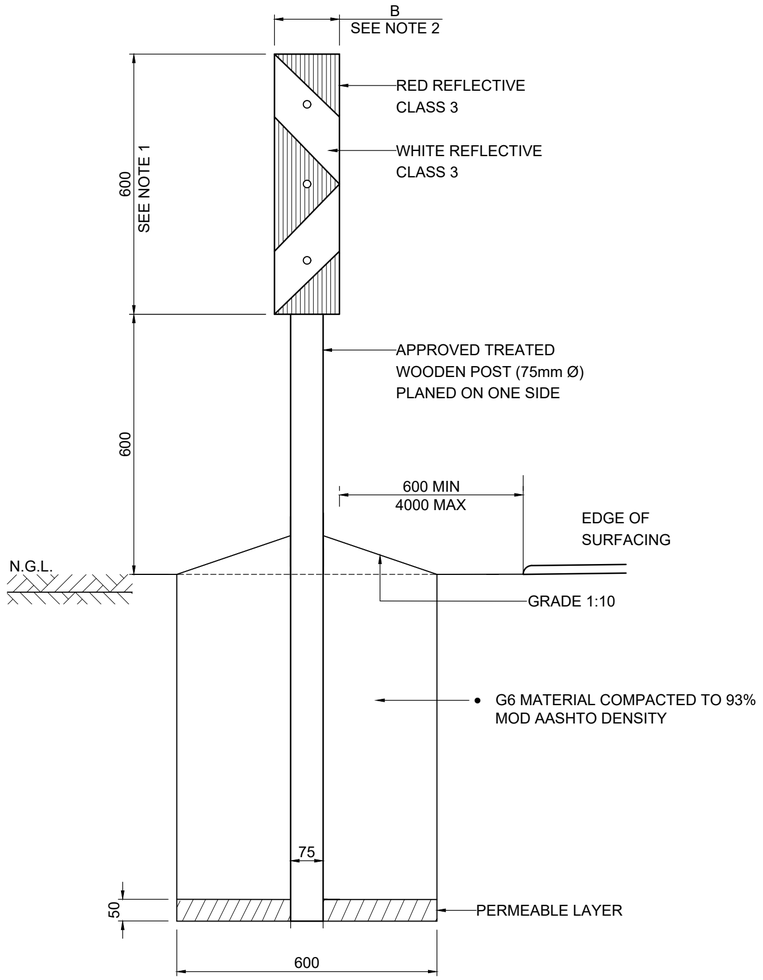

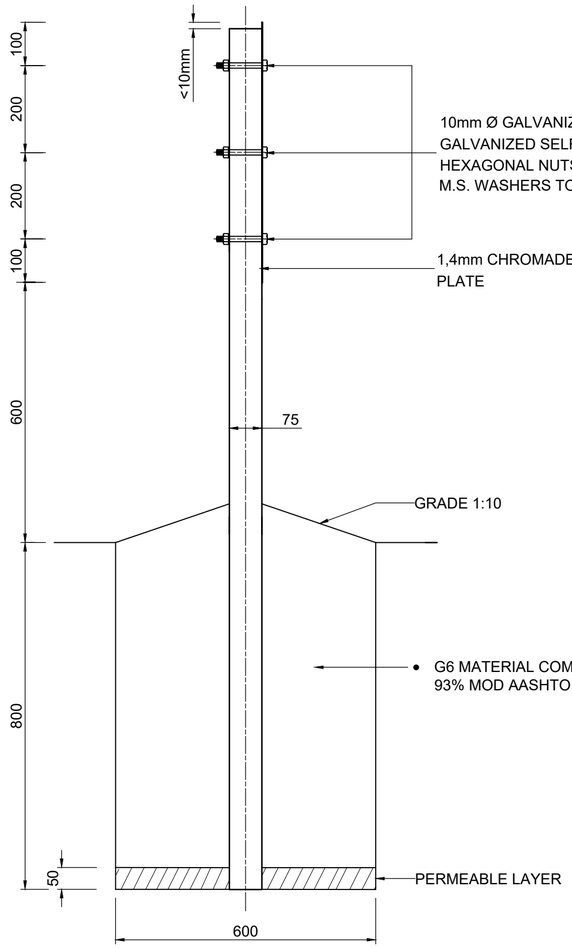

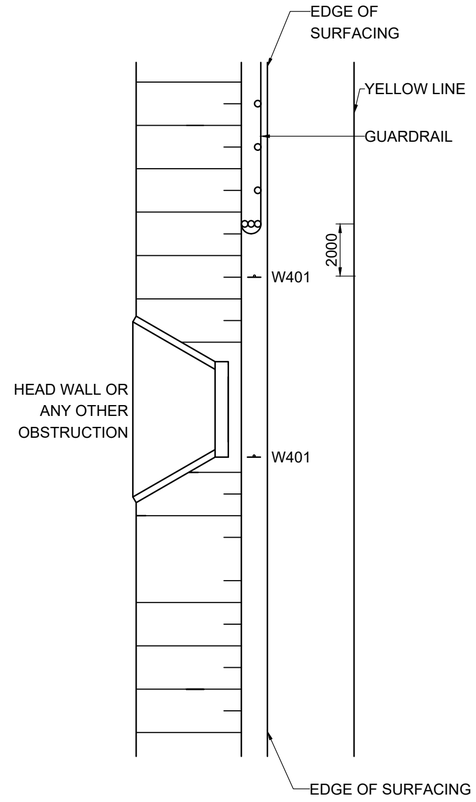

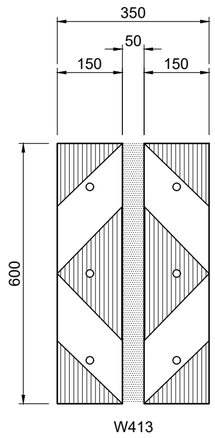

KEY

- RED REFLECTIVE CLASS 3
- WHITE REFLECTIVE CLASS 3
- BLACK

ELEVATION
SCALE 1:10

SECTION
SCALE 1:10

LOCATION DETAIL
N.T.S

DETAIL FOR NARROW ISLANDS OR GORES
SCALE 1:10

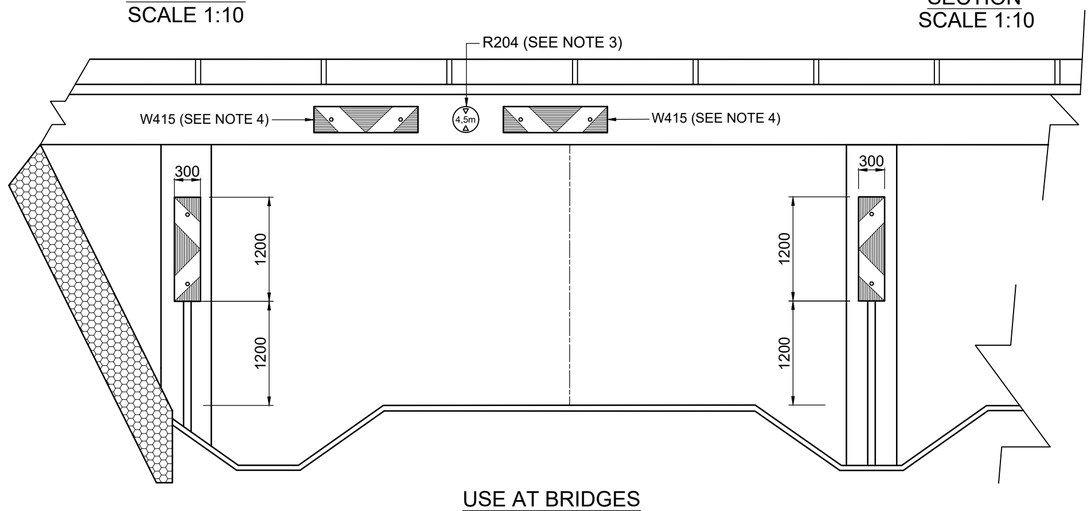

USE AT BRIDGES
SCALE 1:50

NOTES :

1. THE SIZE SHOULD BE 600mm MIN FOR 0 - 80 km/h AND 800mm MIN FOR 81 - 120 km/h.
2. B = 150mm FOR 0 - 80 km/h
   B = 200mm FOR 81 - 120 km/h
3. R204 SIGN SHOULD BE 900mm DIAMETER FOR 0 - 80 km/h AND 1200mm DIAMETER FOR 81-120km/h.
4. W415 SIGN SHOULD BE 800mm x 200mm FOR 0 - 80 km/hr AND 1200mm x 300mm FOR 81 - 120 km/h.

No.	DATE	ADDITIONS AND AMENDMENTS
0	OCT - 2023	ORIGINAL VERSION

STANDARD PLANS

WESTERN CAPE GOVERNMENT
DEPARTMENT OF INFRASTRUCTURE
TRANSPORT INFRASTRUCTURE BRANCH

ROAD SIGNS

DANGER PLATE DETAILS

SCALE : N.T.S.

A2 ORIGINAL

INDEX NO.
WCS/56/1/C6

PLAN NO.
SHEET 6 OF 9

CIRCULAR SIGNS	STOP SIGNS	TRIANGULAR SIGNS
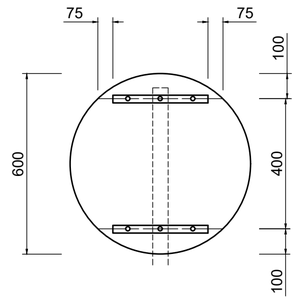	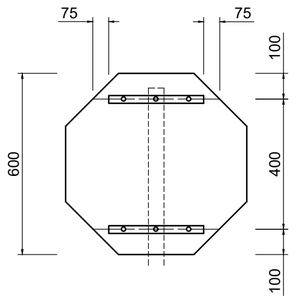	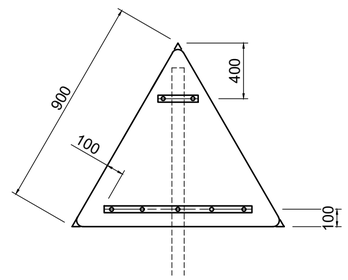
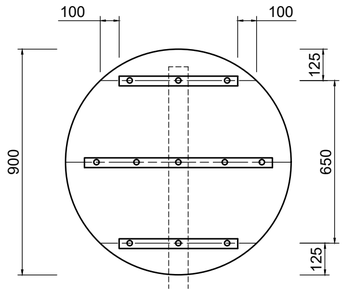	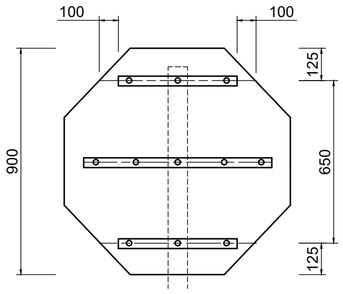	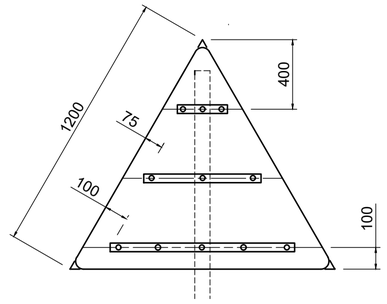
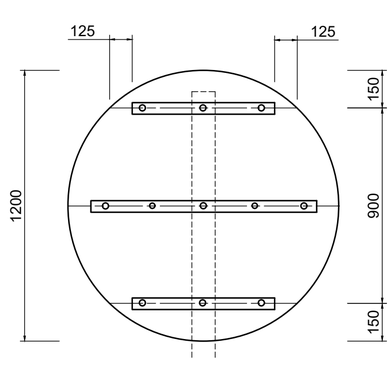	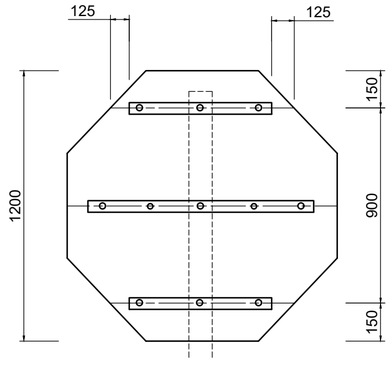	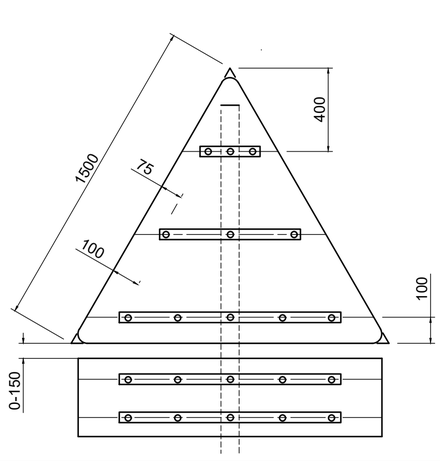

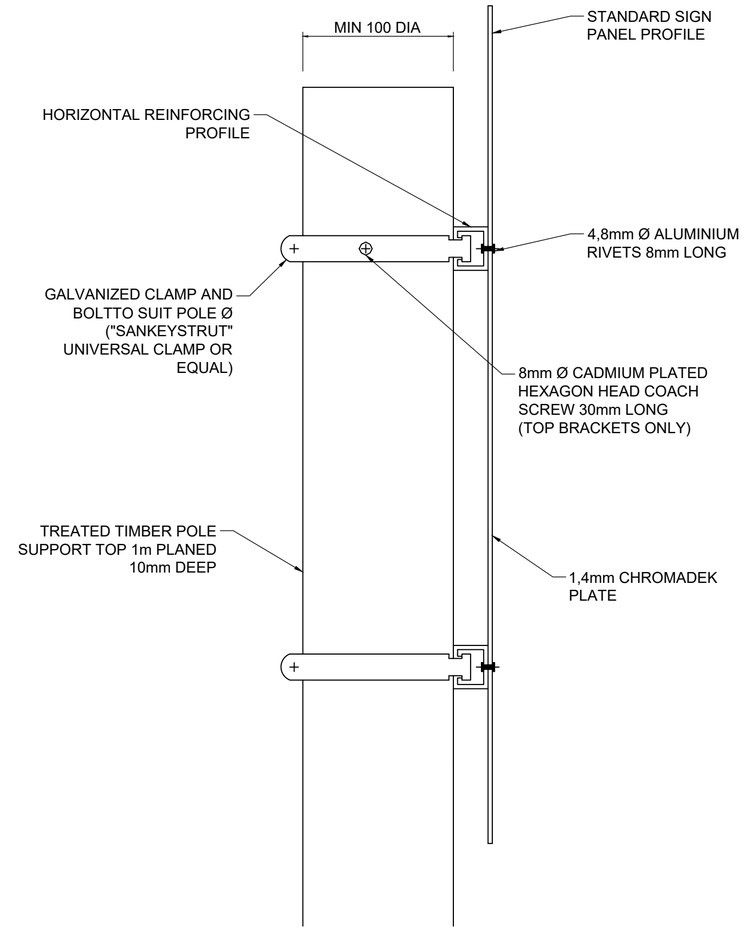

TYPICAL SIDE ELEVATION

NOTES :

1. DETAILS ON THIS DRAWING ARE APPLICABLE TO REGULATORY AND WARNING SIGNS REQUIRING A SINGLE SUPPORT.
2. ROAD SIGNS CONSTRUCTED FROM 1,4mm CHROMADEK.
3. ALUMINIUM RIVETS (4,8mm DIAMETER, 8mm LONG) AT 200mm MAXIMUM CENTRES MINIMUM 3 No. PER REINFORCING PROFILE.
4. RIVET HEADS ON THE SIGN FACE SHALL BE PAINTED TO SUIT SIGN FACE COLOUR.
5. ALL HORIZONTAL REINFORCING PROFILES SHALL BE SIZE 41,3 X 20,6 X 1,6mm.
6. FOR MINIMUM ROAD TRAFFIC SIGNS SIZE APPLICABLE TO SPEED LIMIT REFER TO TABLE 1.1 IN THE LATEST EDITION OF THE SOUTH AFRICAN ROAD TRAFFIC SIGNS MANUAL

No.	DATE	ADDITIONS AND AMENDMENTS
0	OCT - 2023	ORIGINAL VERSION

STANDARD PLANS

WESTERN CAPE GOVERNMENT
DEPARTMENT OF INFRASTRUCTURE
TRANSPORT INFRASTRUCTURE BRANCH

ROAD SIGNS

REGULATORY AND WARNING SIGNS - SINGLE SUPPORT DETAIL

SCALE : N.T.S.

A2 ORIGINAL

INDEX NO. WCS/56/1/C7

PLAN NO. SHEET 7 OF 9

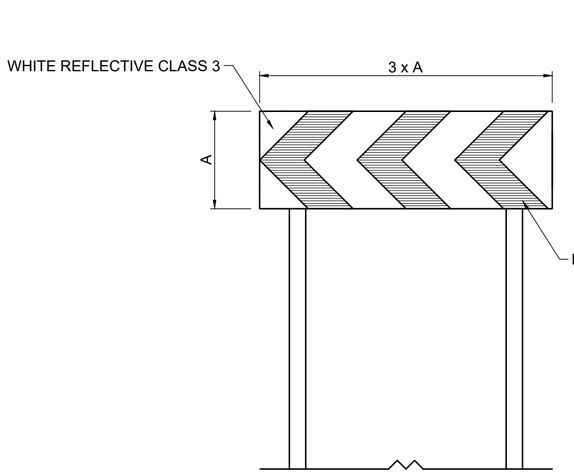

THREE MODULE GROUP
AT SHARP LEFT CURVE
(SEE NOTE 3)

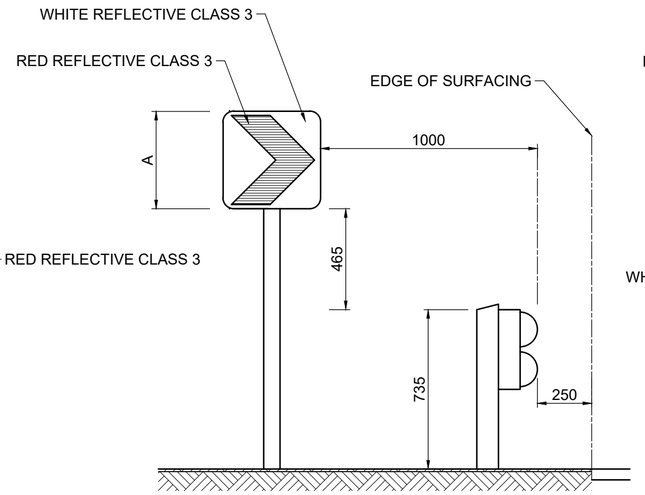

WITH GUARDRAIL

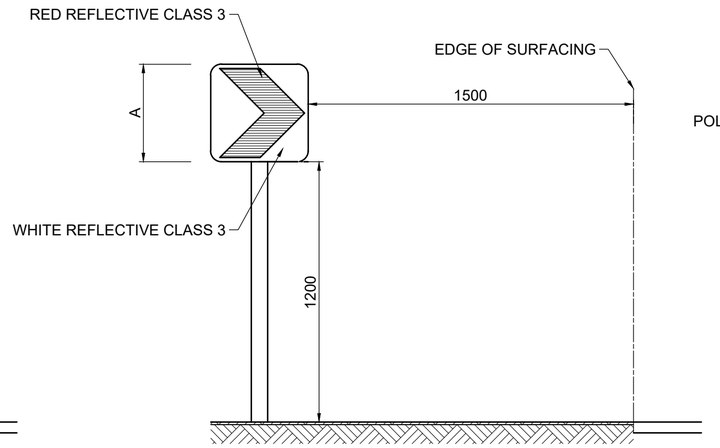

WITHOUT GUARDRAIL

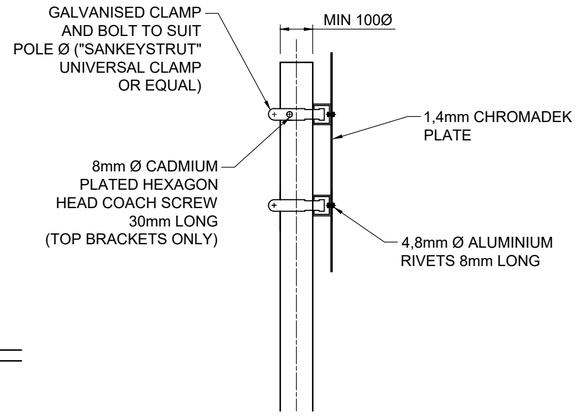

SECTION

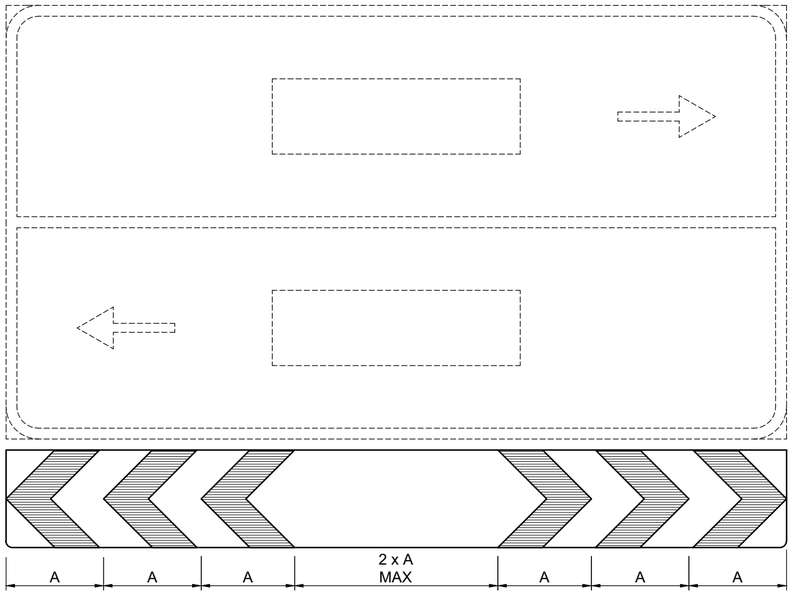

AT T-JUNCTION

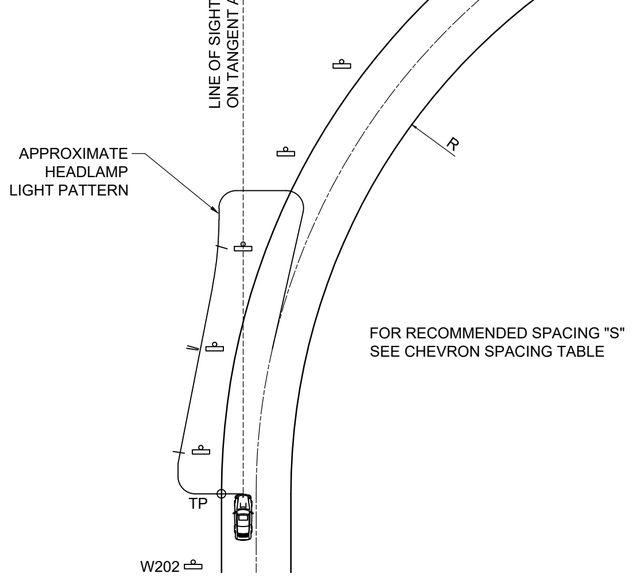

TYPICAL LONGITUDINAL PLACING OF CHEVRONS
NTS

NOTES:

1. CHEVRON SIGNS SHOULD BE PROVIDED ON THE OUTER CURVE TO FACE BOTH DIRECTIONS OF TRAVEL.
2. A MINIMUM OF 5 CHEVRON ARROWS PER DIRECTION ARE NORMALLY REQUIRED
3. AT LEAST 3 CHEVRON ARROWS SHOULD BE VISIBLE AT ANY ONE TIME.
4. WHERE RADII ARE LESS THAN 60m COMPOSITE MODULAR WARNING SIGNS W407 OR W408 SHOULD BE USED
5. WHERE CHEVRON ARROWS FOR RIGHT AND LEFT HAND CURVES OVERLAP:
   (a) SPACING SHOULD REMAIN AS SHOWN IN THE TABLE AS FAR AS POSSIBLE.
   (b) WHERE THE DISTANCE BETWEEN LEFT AND RIGHT HAND CURVE CHEVRON ARROWS IS LESS THAN 2,0m PLACE BOTH CHEVRON ON A SINGLE POST BACK TO BACK
6. CHEVRON SIZES
   (a) 0-80km/h (A) = 450mm
   (b) 80-120km/h (A) = 600mm

CHEVRON SPACING	
CURVE RADIUS (m)	SINGLE MODULE SPACING "S"(m)
60	8 - 15
150	15 - 25
300	25
600	25

No.	DATE	ADDITIONS AND AMENDMENTS
0	OCT - 2023	ORIGINAL VERSION

STANDARD PLANS

WESTERN CAPE GOVERNMENT
DEPARTMENT OF INFRASTRUCTURE
TRANSPORT INFRASTRUCTURE BRANCH

ROAD SIGNS

CHEVRON SIGNS- ERECTION DETAIL

SCALE : N.T.S.

A2 ORIGINAL

INDEX NO.
WCS/56/1/C8

PLAN NO.
SHEET 8 OF 9

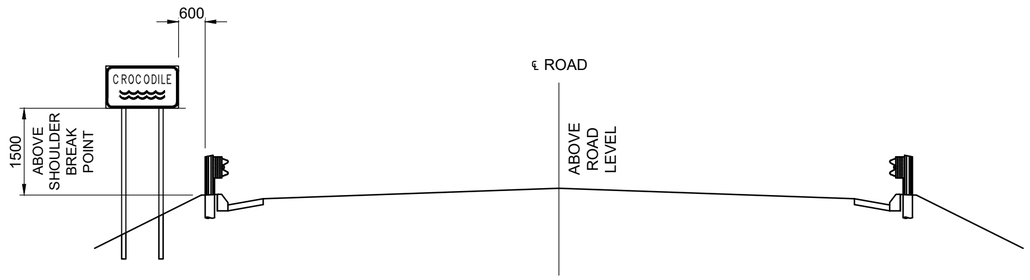

SECTION A-A

NOTES :

1. REFER TO DWG. NO. WCS/56/1/D1 FOR SIGN SUPPORT DETAILS.
2. ALL TEXT TO BE UPPERCASE STYLE B MOD
3. COLOURS:

   BORDERS: BLACK SEMI-MATT
   TEXT: BLACK SEMI-MATT
   SYMBOL: BLUE RETRO-REFLECTIVE CLASS 1
   BACKGROUND: WHITE RETRO-REFLECTIVE CLASS 1

4. DISPLAY RIVER NAME BOARD ONLY ON NUMBERED ROUTES AND WHEN RIVER IS NAMED ON 1:50 000 TOPOGRAPHICAL MAPS

SPEED (km/h)	D
0-80	16
81-120	20

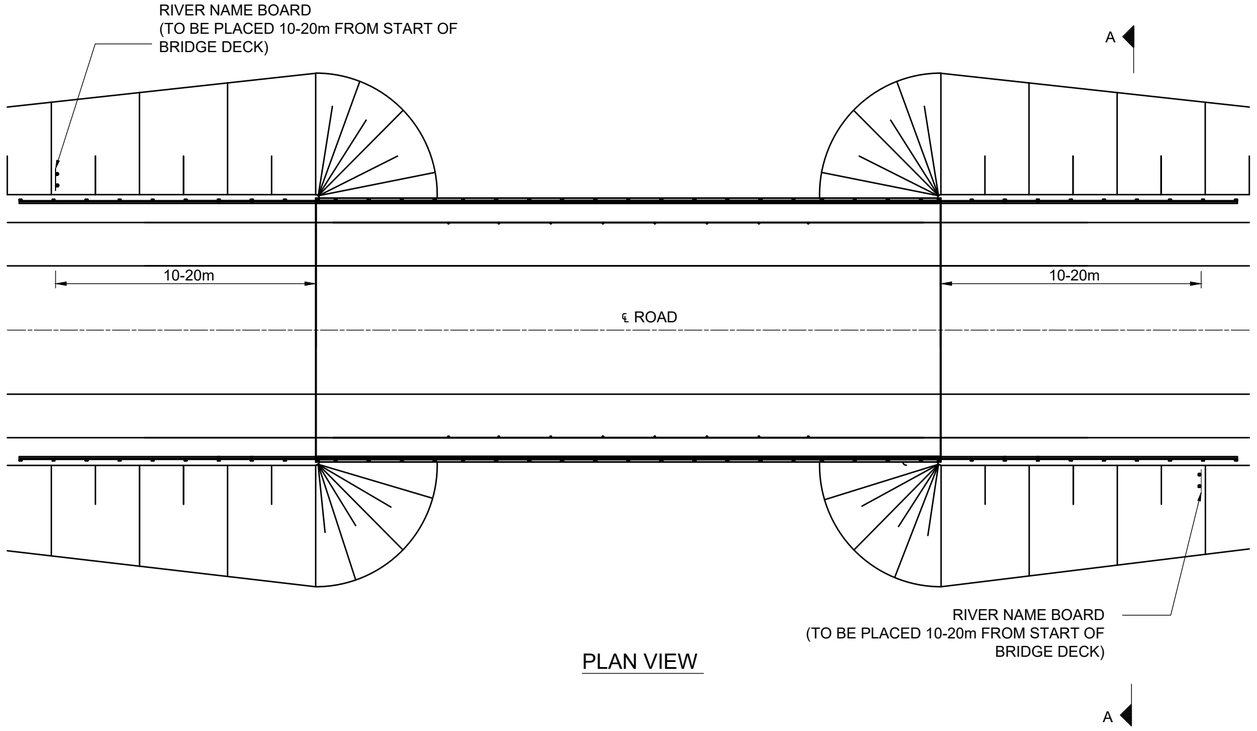

PLAN VIEW

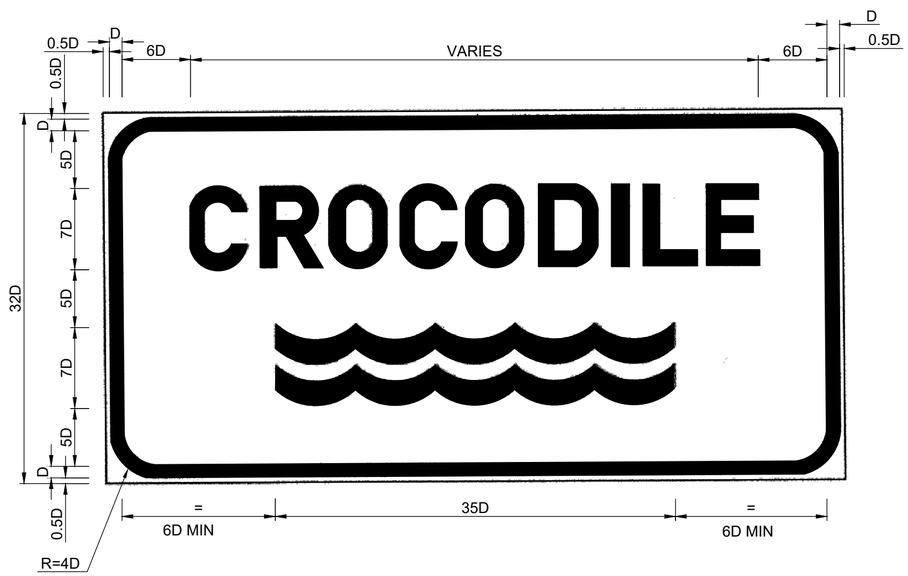

DETAILS OF RIVER NAME BOARD

No.	DATE	ADDITIONS AND AMENDMENTS
0	OCT - 2023	ORIGINAL VERSION

STANDARD PLANS

WESTERN CAPE GOVERNMENT
DEPARTMENT OF INFRASTRUCTURE
TRANSPORT INFRASTRUCTURE BRANCH

ROAD SIGNS

RIVER NAME BOARD

SCALE : N.T.S.

A2 ORIGINAL

INDEX NO.
WCS/56/1/C9

PLAN NO.
SHEET 9 OF 9

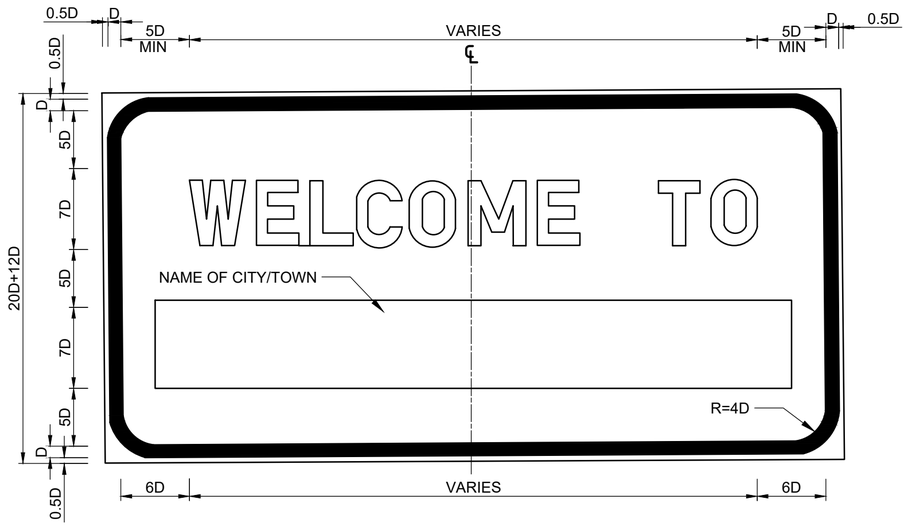

CITY/TOWN NAME SIGN GL 3.1 W

REFER TO GL3.1W SEE DETAILS IN SARTSM VOL.4 pg. 4.2.7

- NAME OF CITY/TOWN SHOULD BE IN ALL CAPS.
- IF NAME OF CITY/TOWN CONSISTS OF MORE THAN ONE WORD, IT CAN BE SHOWN IN TWO LINES.
- STYLE "B MOD" SHOULD BE USED FOR THE LETTERING.

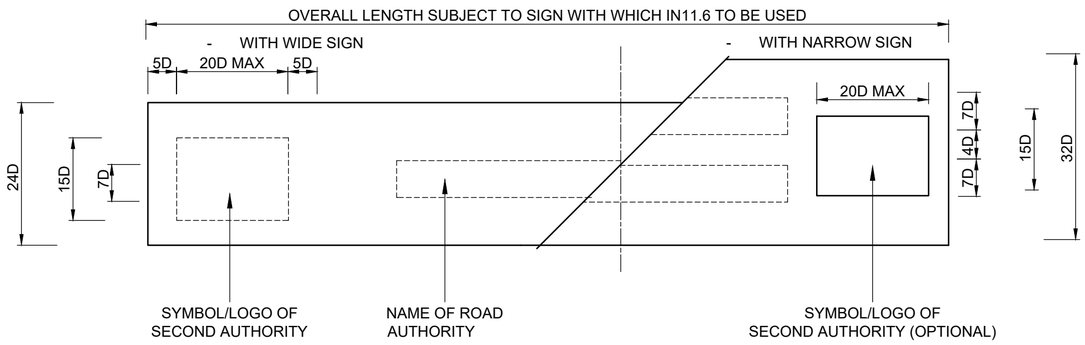

CITY/TOWN NAME SIGN GL IN11.6

REFER TO IN11.6, SEE DETAILS IN SARTSM VOL.4 pg. 9.2.11

- LOGO OF LOCAL AUTHORITY SHOULD ALWAYS BE ON THE LEFT.
- FULL NAMES OF THE LOCAL AUTHORITY SHOULD BE SHOWN TO THE RIGHT,e.g. "OVERSTRAND MUNICIPALITY"
- IF THE NAME OF THE LOCAL AUTHORITY IS TOO LONG, IT CAN BE WRITTEN IN TWO LINES, WHERE THE TWO LINES SHOULD BE LEFT-ALIGNED.
- WIDTH OF IN11.6 SHOULD BE BASED ON THE WIDTH OF THE GL3.1W SIGN.

No.	DATE	ADDITIONS AND AMENDMENTS
0	OCT - 2023	ORIGINAL VERSION

STANDARD PLANS

WESTERN CAPE GOVERNMENT
DEPARTMENT OF INFRASTRUCTURE
TRANSPORT INFRASTRUCTURE BRANCH

ACCOMMODATION OF TRAFFIC

TOWN NAME SIGN

SCALE : N.T.S.

A2 ORIGINAL

INDEX NO.
WCS/56/1/C10

PLAN NO.
SHEET 10 OF 10

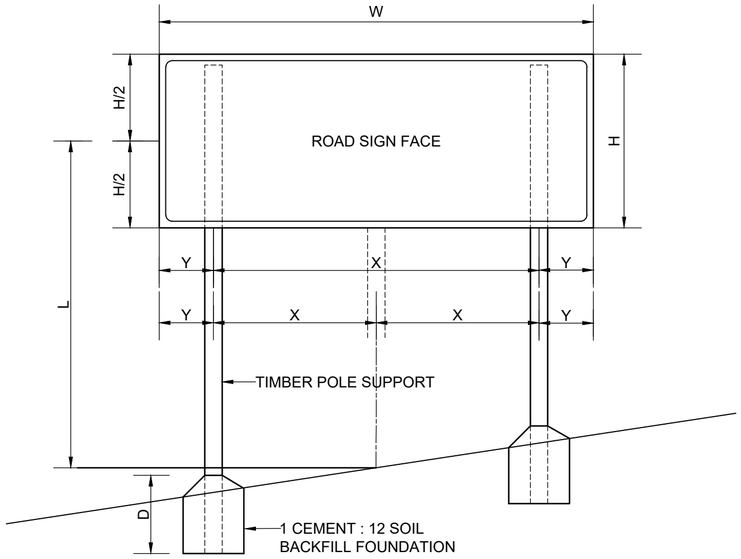

ELEVATION

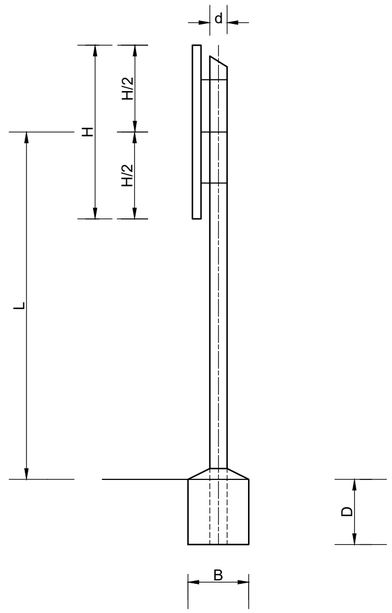

TYPICAL SECTION

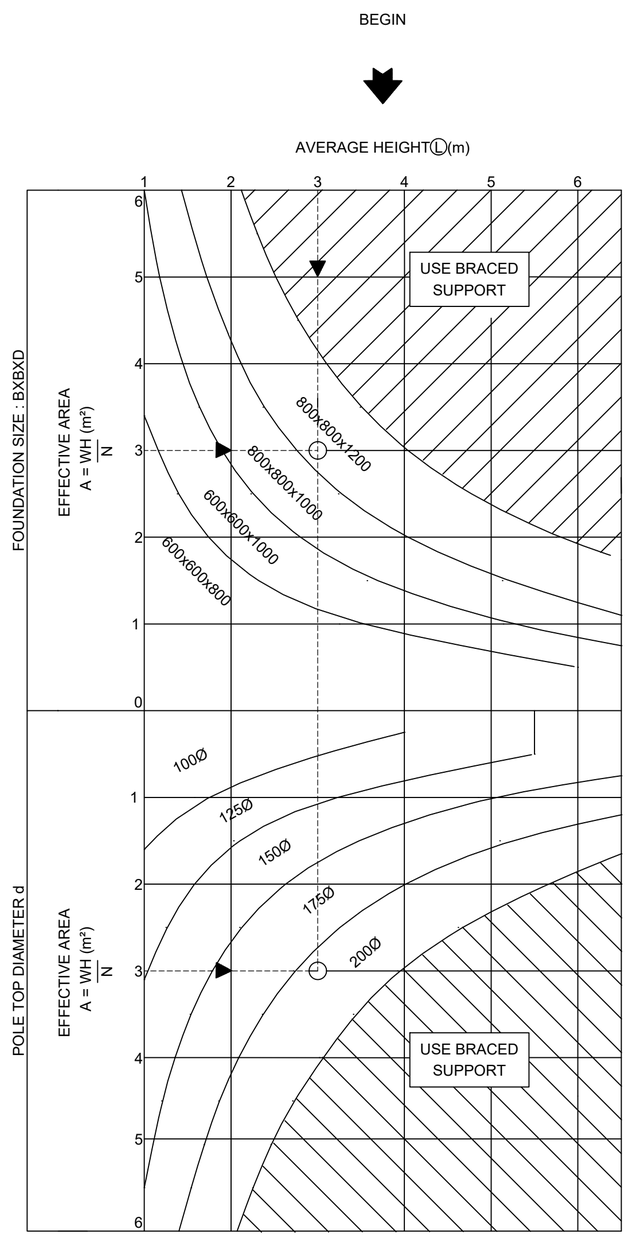

WIDTH OF SIGN	No. OF SUPPORTS	DIMENSIONS	
W	N	Y	X
1,2m - OR LESS	1	W/2	-
1,2m - 3,5m	2	W/5	3W/5
3,5m - 6,0m	3	W/8	3W/8
6,0m - 9,0m	4	W/11	3W/11
9,0m - 12,0m	5	W/14	3W/14

NOTE : MAXIMUM DISTANCE BETWEEN SUPPORTS = 2,4m

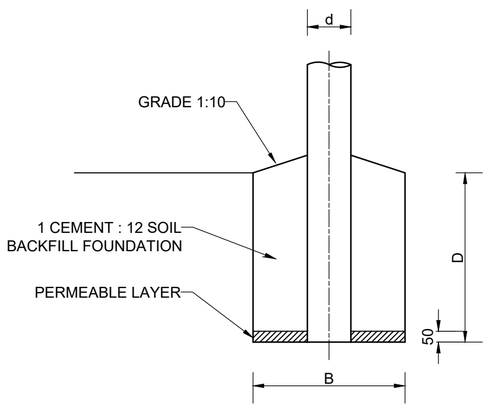

FOOTING DETAIL

NOTES :

1. NOMINAL WIND LOAD ACTING ON THE SIGN FACE HAS BEEN ASSUMED AS FOLLOWS :
   AVERAGE SIGN HEIGHT L < 2m : 1,00 kPa
   AVERAGE SIGN HEIGHT L > 10m : 1,20 kPa
   WIND LOADING IS ASSUMED TO VARY LINEARLY FOR AVERAGE SIGN HEIGHT FALLING BETWEEN THE ABOVE LIMITS.

2. EXCAVATION OF BASE MUST BE IN FIRM NATURAL OR IMPORTED AND COMPACTED MATERIAL. UNSUITABLE NATURAL MATERIAL MUST BE REPLACED BY COMPACTED IMPORTED MATERIAL.

No.	DATE	ADDITIONS AND AMENDMENTS
0	OCT - 2023	ORIGINAL VERSION

STANDARD PLANS

WESTERN CAPE GOVERNMENT
DEPARTMENT OF INFRASTRUCTURE
TRANSPORT INFRASTRUCTURE BRANCH

ROAD SIGNS

GROUND MOUNTED SIGNS - SUPPORT DETAIL

SCALE : N.T.S.

A2 ORIGINAL

INDEX NO.
WCS/56/1/D1

PLAN NO.
SHEET 1 OF 3

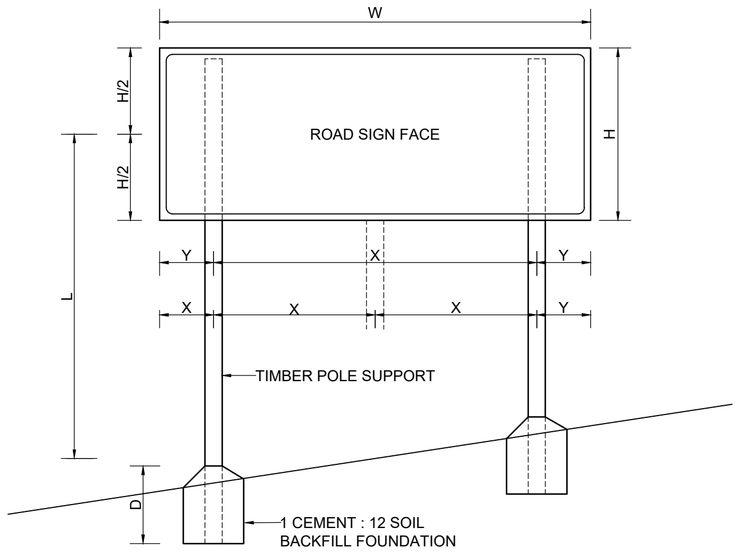

ELEVATION

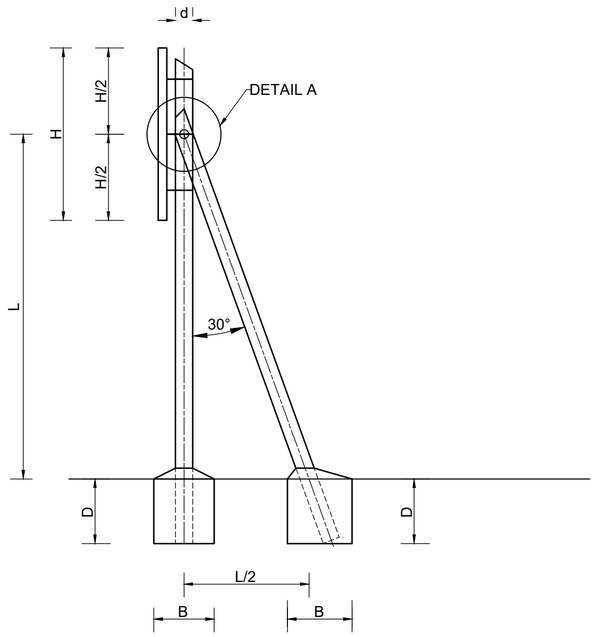

TYPICAL SECTION

WIDTH OF SIGN	NO. OF SUPPORTS	DIMENSIONS	
W	N	Y	X
1,2m - OR LESS	1	W/2	-
1,2m - 3,5m	2	W/5	3W/5
3,5m - 6,0m	3	W/8	3W/8
6,0m - 9,0m	4	W/11	3W/11
9,0m - 12,0m	5	W/14	3W/14

NOTE: MAXIMUM DISTANCE BETWEEN SUPPORTS = 2,4m

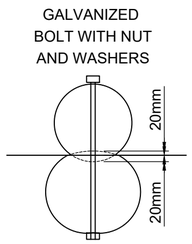

SECTION A-A

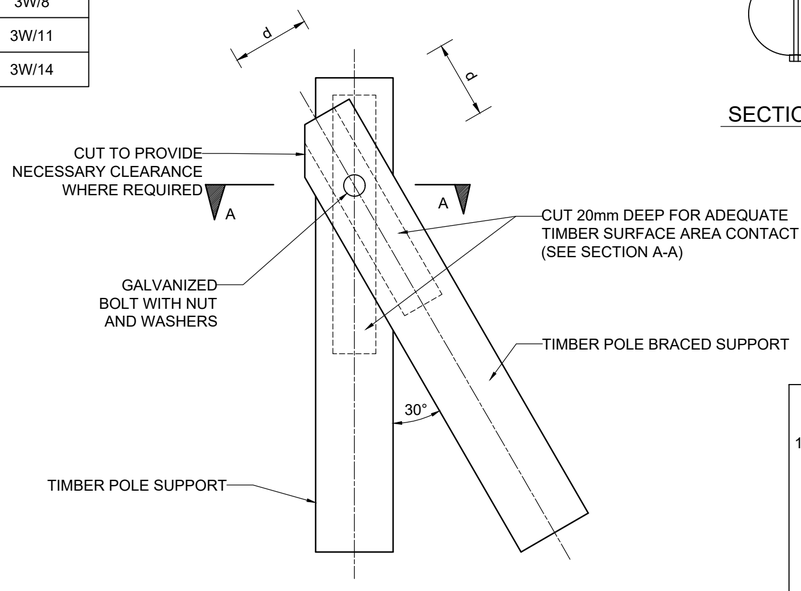

DETAIL A

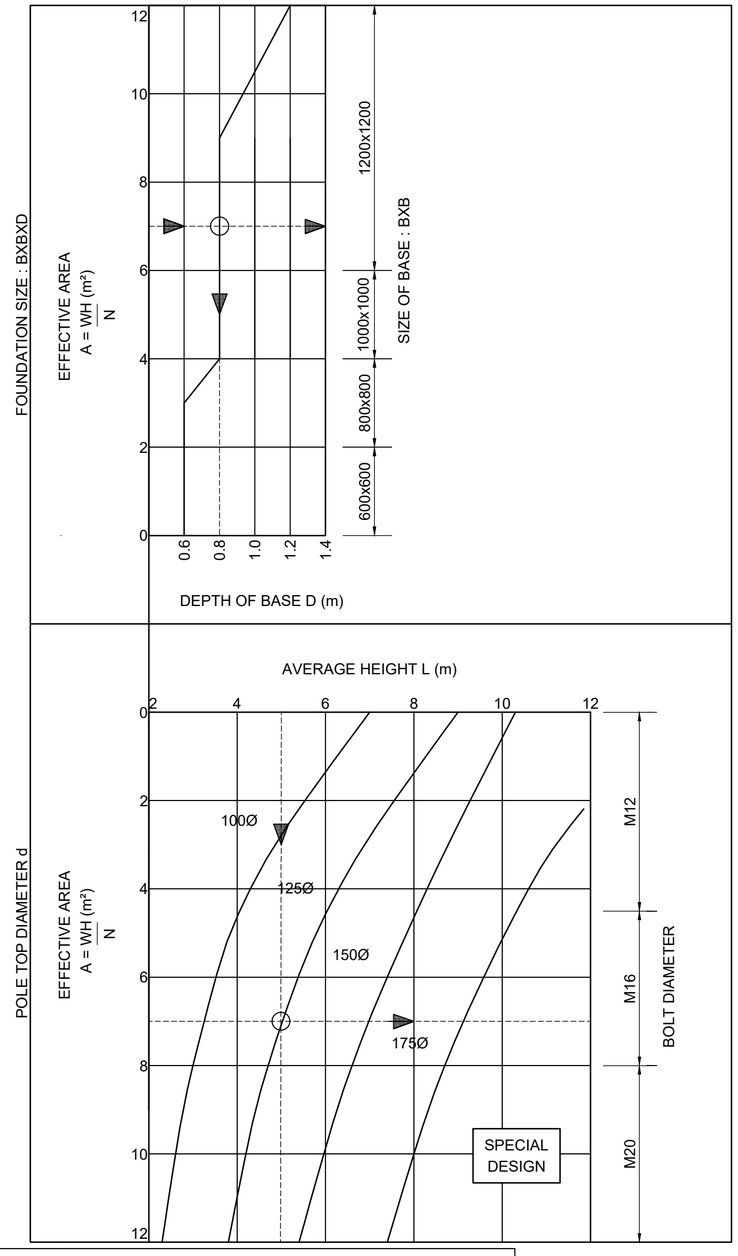

NOTES :

1. NOMINAL WIND LOAD ACTING ON THE SIGN FACE HAS BEEN ASSUMED AS FOLLOWS :
   AVERAGE SIGN HEIGHT L < 2m : 1,00 kPa
   AVERAGE SIGN HEIGHT L > 10m : 1,20 kPa
   WIND LOADING IS ASSUMED TO VARY LINEARLY FOR AVERAGE SIGN HEIGHT FALLING BETWEEN THE ABOVE LIMITS.

2. EXCAVATION OF BASE MUST BE IN FIRM NATURAL OR IMPORTED AND COMPACTED MATERIAL. UNSUITABLE NATURAL MATERIAL MUST BE REPLACED BY COMPACTED IMPORTED MATERIAL.

No.	DATE	ADDITIONS AND AMENDMENTS
0	OCT - 2023	ORIGINAL VERSION

STANDARD PLANS

WESTERN CAPE GOVERNMENT
DEPARTMENT OF INFRASTRUCTURE
TRANSPORT INFRASTRUCTURE BRANCH

ROAD SIGNS

GROUND MOUNTED SIGNS - BRACED SUPPORT DETAIL

SCALE : N.T.S.

A2 ORIGINAL

INDEX NO.
WCS/56/1/D2

PLAN NO.
SHEET 2 OF 3

SIGN No.	STAKE VALUE	ROAD	SIGN TYPE	LETTER HEIGHT		RETRO-REFLECTIVITY	SIGNFACE DESIGN & DIMENSIONS OF ROADS SIGNS	POSITION OF ROAD SIGNS	DETAIL OF SUPPORT REFER TO WCS/56/1/D1 & WCS/56/1/D2					REMARKS
									NUMBER		FOUNDATION		POLE LENGTH	
				CAPITAL	SMALL				POSTS	STAYS	WIDTH	DEPTH	L (MIN)	
No. 1	48,710	TRUNK ROAD 45/1	GD2.01	210	150	BACKGROUND : GREEN SEMI-MATT BORDER : WHITE RETRO-REFLECTIVE CLASS 1 LEGEND : WHITE RETRO-REFLECTIVE CLASS 1	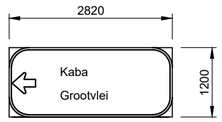	REFER WCS-56-1-C1 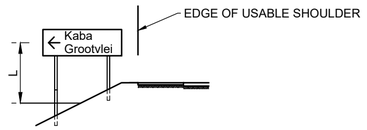	2 X 150Ø	-	600	900	3600	NEW SIGN
								REFER WCS-56-1-C1 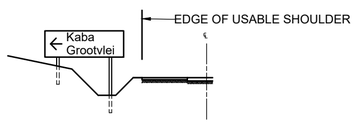						
								REFER WCS-56-1-C1 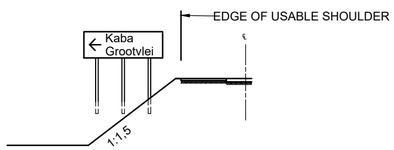						
								REFER WCS-56-1-C1 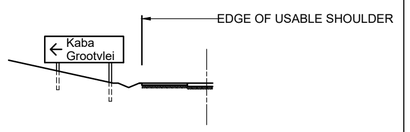						

NOTES :

1. THIS DRAWING MUST NOT BE INCLUDED AS A STANDARD PLAN.
2. INFORMATION SHOWN ON THIS DRAWING IS REQUIRED WITH ROAD SIGNAGE LAYOUTS.
3. DETAIL DRAWINGS FOR SIGN MANUFACTURING TO BE PROVIDED WITH ROADWORKS DRAWINGS.

EXAMPLE

No.	DATE	ADDITIONS AND AMENDMENTS
0	OCT - 2023	ORIGINAL VERSION

STANDARD PLANS

WESTERN CAPE GOVERNMENT
DEPARTMENT OF INFRASTRUCTURE
TRANSPORT INFRASTRUCTURE BRANCH

ROAD SIGNS

ROAD SIGNS SCHEDULE

SCALE : N.T.S.

A2 ORIGINAL

INDEX NO. WCS/56/1/D3

PLAN NO. SHEET 3 OF 3

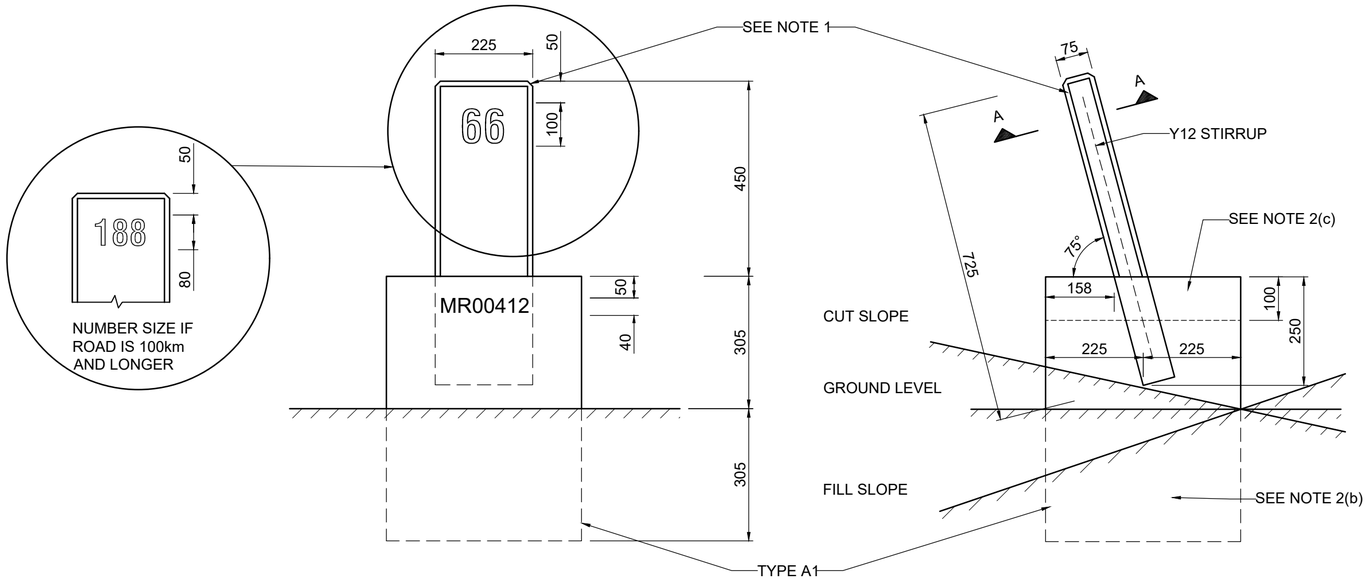

FRONT ELEVATION

SIDE ELEVATION

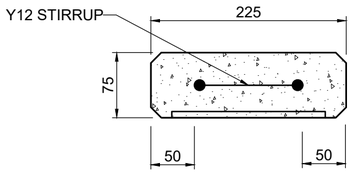

SECTION A-A

NOTES:

1. KILOMETER MARKER POLE
   - (a) DIMENSIONS: 100 X 225 X 725mm (30kg).
   - (b) 15X15mm CHAMFERS ON ALL EXPOSED EDGES.
   - (c) NUMBERS: RECESSED 5mm DEEP.
     LINE WIDTH = 1/7 X LETTER HEIGHT (15mm FOR 100mm AND 11mm FOR 80mm TEXT).
   - (d) NUMBERING FORMAT:

     100mm NUMERALS INDICATING THE FULL KILOMETER DISTANCE. NUMBER SIZE TO BE REDUCED TO 80mm FOR ROAD SECTIONS 100km AND LONGER. (SEE DRAWING INSET)

   - (e) CONCRETE CLASS 30/20, NOMINAL MIX 1:2:4 USING APPROVED WHITE CEMENT.

   - (f) POLE FACE TO BE PARALLEL TO ROADWAY.

2. CONCRETE PIPE - (CLASS 50D)
   - (a) DIMENSIONS
     TYPE A1 : 450mm Ø, 610mm (100kg) LONG.
     TYPE A2 : 450mm Ø, 1220mm (200kg) LONG.
   - (b) PIPE FILLED WITH COMPACTED SOIL.
   - (c) SOIL/CEMENT CAP (6:1)

3. PAINTING
   - (a) RECESSED NUMBERS TO BE PAINTED WITH BLACK EPOXY RESIN.
   - (b) ROAD NUMBER TO BE STENCILED ON WITH FORMAT AS FOR THE FOLLOWING EXAMPLES:
     TRUNK ROAD 9 SECTION 4 : TR00904
     MAIN ROAD 421 : MR00421
     DIVISIONAL ROAD 1025 : DR01025
     MINOR ROAD : OP00010

4. LOCATION OF POST
   - (a) IN ACCORDANCE WITH ROAD LOGS ALONG LEFT SIDE OF ROAD
   - (b) A MINIMUM OF 1m FROM FENCE. WHERE SERVICES RUN INSIDE ROAD RESERVE OR FIRE BREAKS ARE REQUIRED, 2,5m IS PREFFERED. SEE DETAIL A
   - (c) NORMAL LOCATION IS OUTSIDE SIDE DRAIN +5m FROM SHOULDER AND ON SAME LEVEL.
   - (d) ON HIGH FILLS AND BEHIND GUARDRAILS SEE DETAIL B AND DETAIL C.

5. CONFIRM WITH HEAD OFFICE DESIGN WHETHER MARKERS ARE REQUIRED

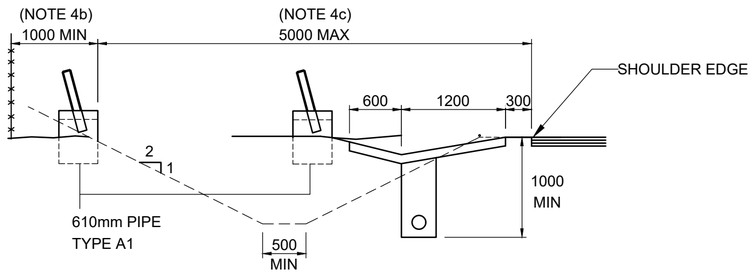

DETAIL A: (OUTSIDE SIDE DRAIN)

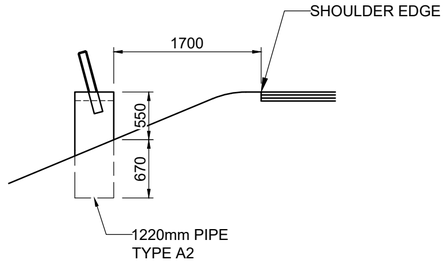

DETAIL B: (ON HIGH FILL)

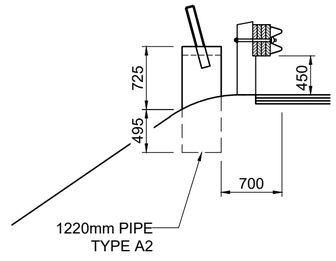

DETAIL C: (BEHIND GUARD RAILS)

No.	DATE	ADDITIONS AND AMENDMENTS
0	OCT - 2023	ORIGINAL VERSION

STANDARD PLANS

WESTERN CAPE GOVERNMENT
DEPARTMENT OF INFRASTRUCTURE
TRANSPORT INFRASTRUCTURE BRANCH

MARKER SIGNS

KILOMETER POST -
CONCRETE KILOMETER MARKER

SCALE : N.T.S.

A2 ORIGINAL

INDEX NO.
WCS/56/2/D1

PLAN NO.
SHEET 1 OF 2

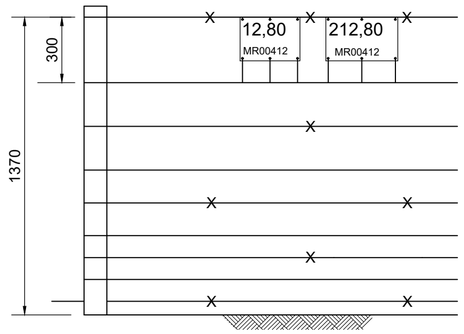

STOCK PROOF FENCE

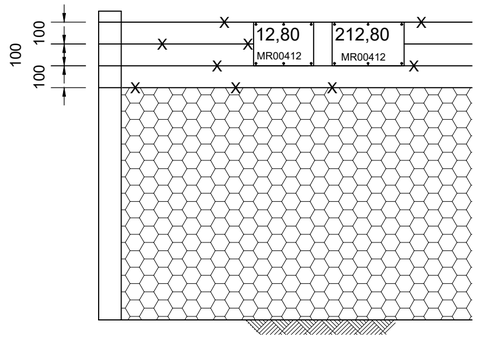

VERMIN-PROOF FENCE

POSITION ON LEFT FENCE WITH INCREASING STAKE VALUES

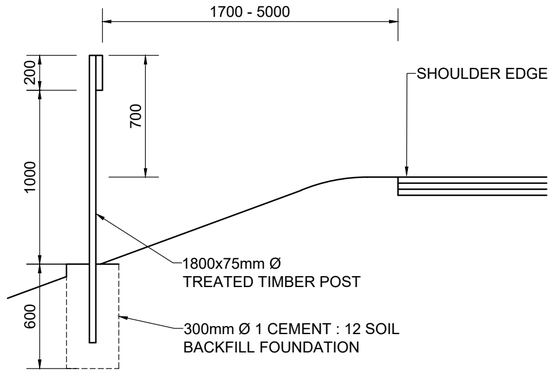

LEFT FENCE > 16m FROM ROAD CENTERLINE

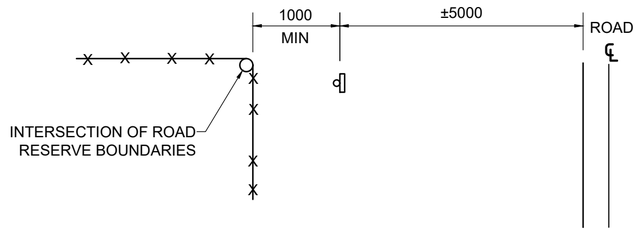

POSITION ON ROAD CROSS-SECTION

POSITION WHERE FENCE IS > 16m FROM ROAD CENTERLINE OR AT THE END OF THE ROAD RESERVE

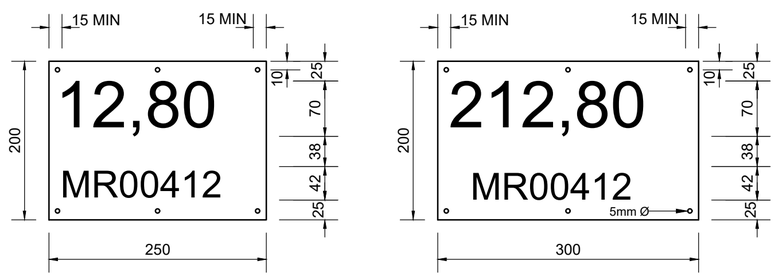

PLATE DETAIL

NOTES :

1. BOARD
   THE BOARD SHALL BE MANUFACTURED FROM CHROMADEK G275 GALVANIZED ISCOR STEEL PLATE OF AT LEAST 1mm THICKNESS FOR PLATES ON FENCE OR 1.4mm THICK FOR PLATES ON POLES. IT SHALL BE TREATED ON BOTH SIDES WITH AN EPOXY PRIMER FOLLOWED BY A WHITE SILICON POLYESTER TOP COAT. THE DRY THICKNESS OF THE TREATMENT SHALL BE AT LEAST 0.25mm.

2. PREPARATION OF SURFACES
   SURFACES SHALL BE REPAIRED AS SPECIFIED IN SECTION 8400 OF COLTO STANDARD SPECIFICATIONS FOR ROADS AND BRIDGE WORKS FOR STATE ROAD AUTHORITIES, 1998 AND SANS 1519.

3. PAINT
   ALL PAINTS SHALL COMPLY WITH THE REQUIREMENTS OF SABS 1519. THE PAINTED SURFACE SHALL BE SEMI-MAT AND THE 60° SPECULAR GLOSS, MEASURED IN ACCORDANCE WITH SANS METHOD 134, SHALL NOT EXCEED 34 BEFORE AND AFTER WEATHERING. NO THICKENERS SHALL BE ADDED TO THE PAINT. THE LETTERING SHALL BE BLACK.

4. VINYL
   ALL VINYL LETTERING AND BACKGROUND TO BE CAST VINYL FILM.

5. IDENTIFICATION
   THE MANUFACTURER SHALL PLACE HIS NAME OR LOGO AND THE MANUFACTURING DATE IN INDELIBLE MARKING ON THE BACK OF THE SIGN.

6. FASTENING
   CADMIUM PLATED HOG RINGS OF APPROXIMATELY 3mm THICKNESS SHALL BE USED TO FASTEN THE SIGNS TO THE FENCING. THE CADMIUM PLATING SHALL BE 150 MICRON THICK IN ACCORDANCE WITH BS1706:1999 CLASS A.
   HOT DIPPED GALVANIZED RIVETS, BOLTS OR NAILS SHALL BE USED TO FASTEN SIGNS TO POSTS IN AREAS WITHOUT FENCING. THE GALVANIZING SHALL COMPLY WITH THE REQUIREMENTS OF ISO 1461:2009 FOR COATING ON TYPE C1 AND C2 ARTICLES.

7. LETTERING
   LETTERING SHALL BE "STYLE B" IN ACCORDANCE WITH SADC-RTSM VOLUME 4 CHAPTER 11 OR SIMILAR SIZE TEMPLATE.
   ROAD NUMBER FORMAT : AANNNNN
   WHERE AA : 2 LETTERS - TR(TRUNK ROADS), MR(MAIN ROADS).
   NNNNN : 5 NUMERALS WITH LEADING SPACES TAKEN UP WITH ZERO'.
   EXAMPLE - TRUNK ROAD 9 SECTION 4 : TR00904
   MAIN ROAD 421 : MR00421
   DIVISIONAL ROAD 1025 : DR01025

8. DIMENSIONS
   ALL DIMENSIONS ON DRAWING IN mm.

9. CONFIRM WITH HEAD OFFICE DESIGN WHETHER MARKERS ARE REQUIRED

No.	DATE	ADDITIONS AND AMENDMENTS
0	OCT - 2023	ORIGINAL VERSION

STANDARD PLANS

WESTERN CAPE GOVERNMENT
DEPARTMENT OF INFRASTRUCTURE
TRANSPORT INFRASTRUCTURE BRANCH

MARKER SIGNS

DISTANCE MARKER PLATE

SCALE : N.T.S.

A2 ORIGINAL

INDEX NO. WCS/56/2/D2

PLAN NO. SHEET 2 OF 2

TABLE B

GRADE %	MIN. LENGTH OF EMBAYED CLIMBING LANE					
	PERCENTAGE TRUCKS					
	5	10	15	20	25	30
3	600	350	250	200	160	160
4	470	260	180	150	130	110
5	360	200	150	120	100	100
6	310	170	130	100		
7	270	150	110			
8	240	130	100			
9	210	120				
10	190	110				
11	180	100				
12	170	100				

TABLE A

ADVANCE WARNING SIGNS - LOCATION & SIZE

OPERATING SPEED km/h	LOCATION DISTANCE FROM HAZARD (m)	W215 SIZE (mm)	GS101 SIZE (mm)	W401 SIZE (mm)
120	330	1500	2400x1800	800x200
100	240	1500	1800x1200	800x200
80	160	1200	1600x1200	600x150
60	120	900	1200x 900	600x150

ADVANCE WARNING SIGNS W215 AND GS101 TO BE SUPPLEMENTED BY A DISTANCE INFORMATION PLATE (IN11.3) IF HAZARD LOCATION > 300m



W401



W215

APPLICABLE TO < 1000 VPD

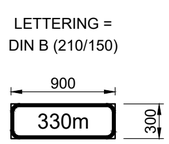

IN11.3

SUPPLEMENTARY PLATE



GS101

APPLICABLE TO ≥ 1000 VPD AND FREEWAYS

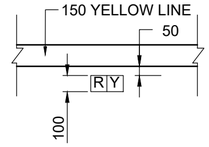

DETAIL A

NOTE :

LANE WIDTH MAY BE REDUCED ON THROUGH LANE TO 3,4m PER LANE AFTER CONSULTATION WITH P.R.E.

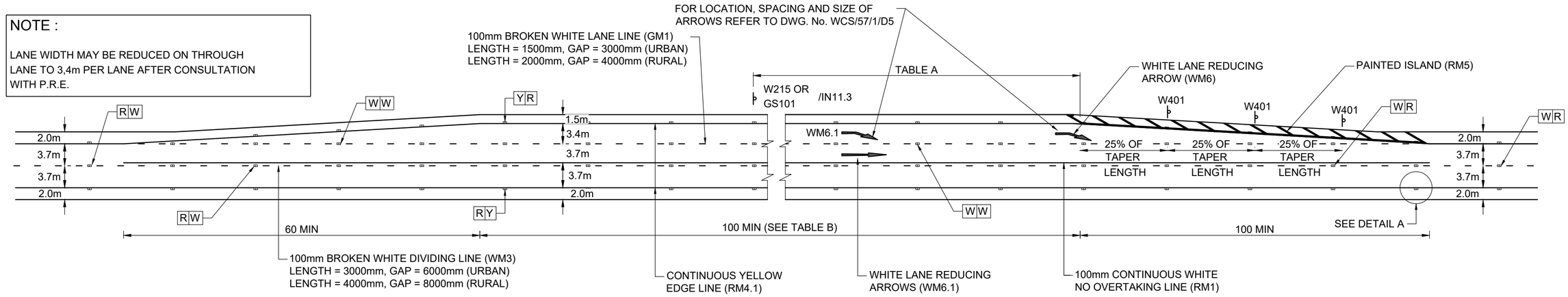

TYPICAL CLIMBING LANE

No.	DATE	ADDITIONS AND AMENDMENTS
0	OCT - 2023	ORIGINAL VERSION

STANDARD PLANS

WESTERN CAPE GOVERNMENT
DEPARTMENT OF INFRASTRUCTURE
TRANSPORT INFRASTRUCTURE BRANCH

ROAD MARKINGS

AUXILIARY LANES

SCALE : N.T.S.

A2 ORIGINAL

INDEX NO. WCS/57/1/D1

PLAN NO. SHEET 1 OF 6

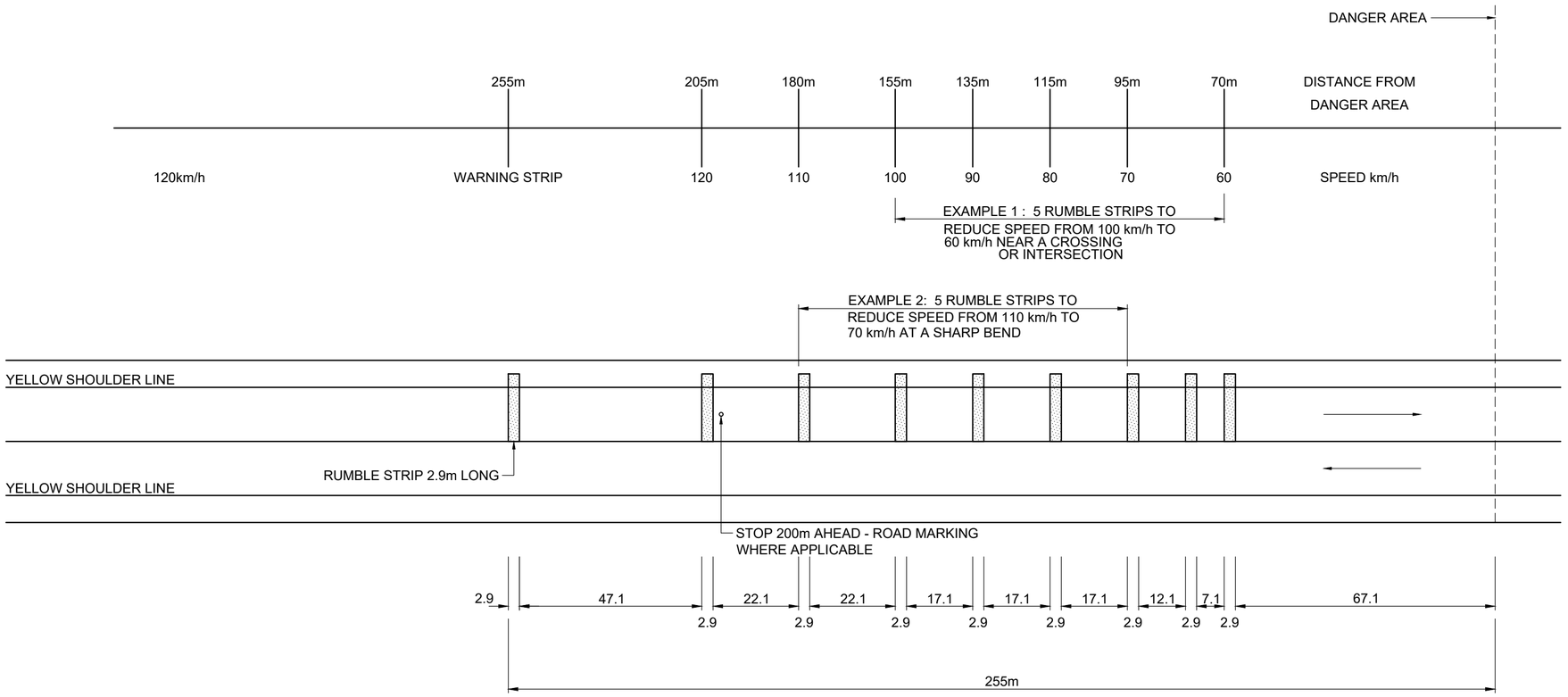

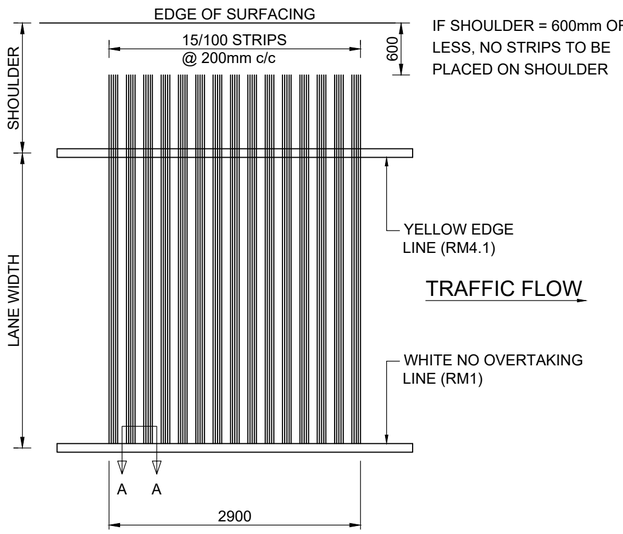

ENLARGED DETAIL OF RUMBLE STRIP

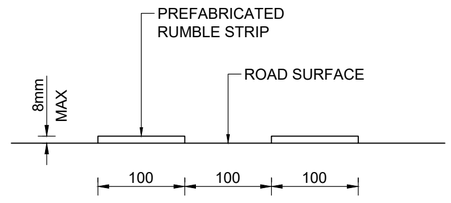

SECTION A-A

RUMBLE STRIP CONSTRUCTION PROCEDURE:

1. USE PREFABRICATED TO FORM 100mm WIDE STRIPS (13,2mm AGGREGATE ON CAPE SEAL OR 9,5mm AGGREGATE ON OTHER TYPE OF SURFACING).
2. CLEAN THE ROAD SURFACE AND DEMARCATE (CHALK) THE AREA FOR RUMBLE STRIPS APPLICATION.
3. PAINT THE PAPER SIDE OF THE STRIP AND THE DEMARCATED ROAD SURFACE AREA WITH 60% ANIONIC STABLE GRADE EMULSION OR 65% CATIONIC SPRAY GRADE EMULSION @ THE RATE OF 0.75 l/m².
4. STRIPS SHOULD BE POSITIONED ONCE THE PAINTED SURFACES ARE DRY AND TACKY.
5. THE HANDLING EDGE ON PREFABRICATED STRIPS SHOULD THEN BE REMOVED WITH A SHARP KNIFE.
6. CRUSHER DUST OR DRY SAND FOR BLINDING.
7. ROLL THE STRIPS AFTER PLACING WITH A LIGHT DRUM ROLLER, OR THE BACK WHEEL OF AT LEAST A 3 TON TRUCK - 5 PASSES WOULD BE SUFFICIENT.

No.	DATE	ADDITIONS AND AMENDMENTS
0	OCT - 2023	ORIGINAL VERSION

STANDARD PLANS

WESTERN CAPE GOVERNMENT
DEPARTMENT OF INFRASTRUCTURE
TRANSPORT INFRASTRUCTURE BRANCH

ROAD MARKINGS

RUMBLE STRIPS

SCALE : N.T.S.

A2 ORIGINAL

INDEX NO. WCS/57/1/D2

PLAN NO. SHEET 2 OF 6

ROAD SIGNS

R2

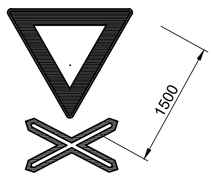

W403
SINGLE
LINE

R2

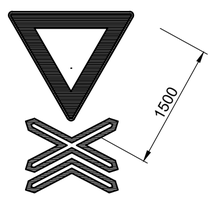

W404
MULTIPLE
LINES

R1



W403
SINGLE
LINE

R1

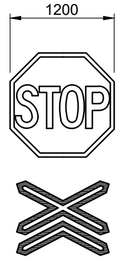

W404
MULTIPLE
LINES



W403
SINGLE
LINE



W404
MULTIPLE
LINES

NOTE :

USED ONLY WHERE CONTROL IS BY GATES, BOOMS OR BARRIERS.

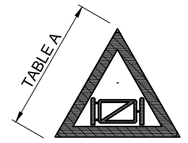

W314

NOTE :

USED ONLY WHERE CONTROL IS BY GATES, BOOMS OR BARRIERS.

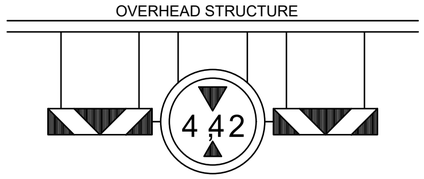

W415 R204 W415

NOTE :

USED WHENEVER THERE ARE OVERHEAD ELECTRIFIED HIGH-TENSION CONTACT WIRES MOUNTED ON OVERHEAD STRUCTURE AND USED WHEN THE CLEARANCE HEIGHT OVER ANY PART OF THE FULL WIDTH OF ROADWAY IS LESS THAN 5,2m. THE ACTUAL CLEARANCE HEIGHT, LESS A SAFETY ALLOWANCE OF 75mm, SHOULD BE SHOWN TO TWO DECIMAL PLACES OF A METRE AND ROUNDED DOWN TO THE SECOND DECIMAL.

W320

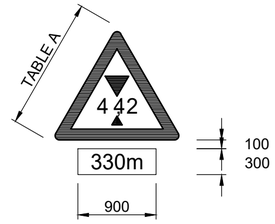

IN11.3
(DISTANCE)

NOTE :

USED ONLY IN ADVANCE OF OVERHEAD ELECTRIFIED HIGH-TENSION CONTACT WIRES. TO BE SUPPLEMENTED BY A DISTANCE INFORMATION PLATE IF LOCATION DISTANCE > 300m.
LETTERING = DIN B (210/150)

W318

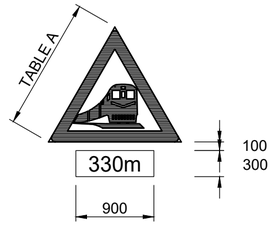

IN11.3
(DISTANCE)

NOTE :

TO BE SUPPLEMENTED BY A DISTANCE INFORMATION PLATE IF LOCATION DISTANCE > 300m.
LETTERING = DIN B (210/150)

ROAD MARKINGS

STOP GM7

USED ONLY AT STOP CONTROLLED CROSSINGS WITHOUT GATES, BOOMS OR BARRIERS.
LENGTH = 2500 (URBAN)
= 5000 (RURAL)



WM1

CONTINUOUS WHITE LINES
WIDTH = 200mm (URBAN)
= 400mm (RURAL)
LENGTH = 4000mm (URBAN)
= 5000mm (RURAL)



WM8.2

CONTINUOUS WHITE LINES
LENGTH = 3000mm (URBAN)
= 4000mm (RURAL)

STOP LINE (RTM1) : CONTINUOUS WHITE LINE
WIDTH = 300mm (URBAN)
= 500mm (RURAL)

YIELD LINE (RTM2) : BROKEN WHITE LINE
LENGTH = 600mm, GAP = 300mm
WIDTH = 300mm (URBAN)
= 500mm (RURAL)

NO OVERTAKING : CONTINUOUS WHITE LINE LINE (RM1)
LENGTH = REFER TO TABLE D
WIDTH = 100mm

DIVIDING : BROKEN WHITE LINE LINE (WM3)
WIDTH = 100mm
LENGTH = 3000mm, GAP = 6000mm (URBAN)
LENGTH = 4000mm, GAP = 8000mm (RURAL)

RUMBLE STRIPS

RUMBLE STRIPS AS PER DWG. No. WCS/57/1/D2 TO BE USED IN CONJUNCTION WITH ROAD SIGNS AND MARKINGS WHERE VISIBILITY IS IMPAIRED DUE TO eg.

1. FREQUENT FOG CONDITIONS AT COASTAL AREAS.
2. EXCESSIVE SMOKE CONDITIONS RESULTING FROM FREQUENT FIRES OR SMOULDERING DUMP SITES.
3. FREQUENT HEAVY RAINFALL CONDITIONS.
4. INADEQUATE STOPPING SITE DISTANCE.

ALL ROAD SIGNS AND MARKINGS TO CONFORM TO SADC-RTSM LATEST EDITION

THIS DRAWING TO BE READ IN CONJUNCTION WITH DWG. No. WCS/57/1/D4

No.	DATE	ADDITIONS AND AMENDMENTS
0	OCT - 2023	ORIGINAL VERSION

STANDARD PLANS

WESTERN CAPE GOVERNMENT
DEPARTMENT OF INFRASTRUCTURE
TRANSPORT INFRASTRUCTURE BRANCH

ROAD MARKINGS

ROAD SIGNS AND MARKINGS AT LEVEL CROSSINGS

SCALE : N.T.S.

A2 ORIGINAL

INDEX NO.
WCS/57/1/D3

PLAN NO.
SHEET 3 OF 6

TABLE A		
OPERATING SPEED km/h	LOCATION DIST. FROM HAZARD (m)	SIZE
RURAL 120	330	1500
100	240	1500
URBAN 80	160	1200
60	120	900

TABLE C	
OPERATING SPEED km/h	LOCATION DIST. FROM HAZARD (m)
RURAL 120	225
100	180
URBAN 80	135
60	90

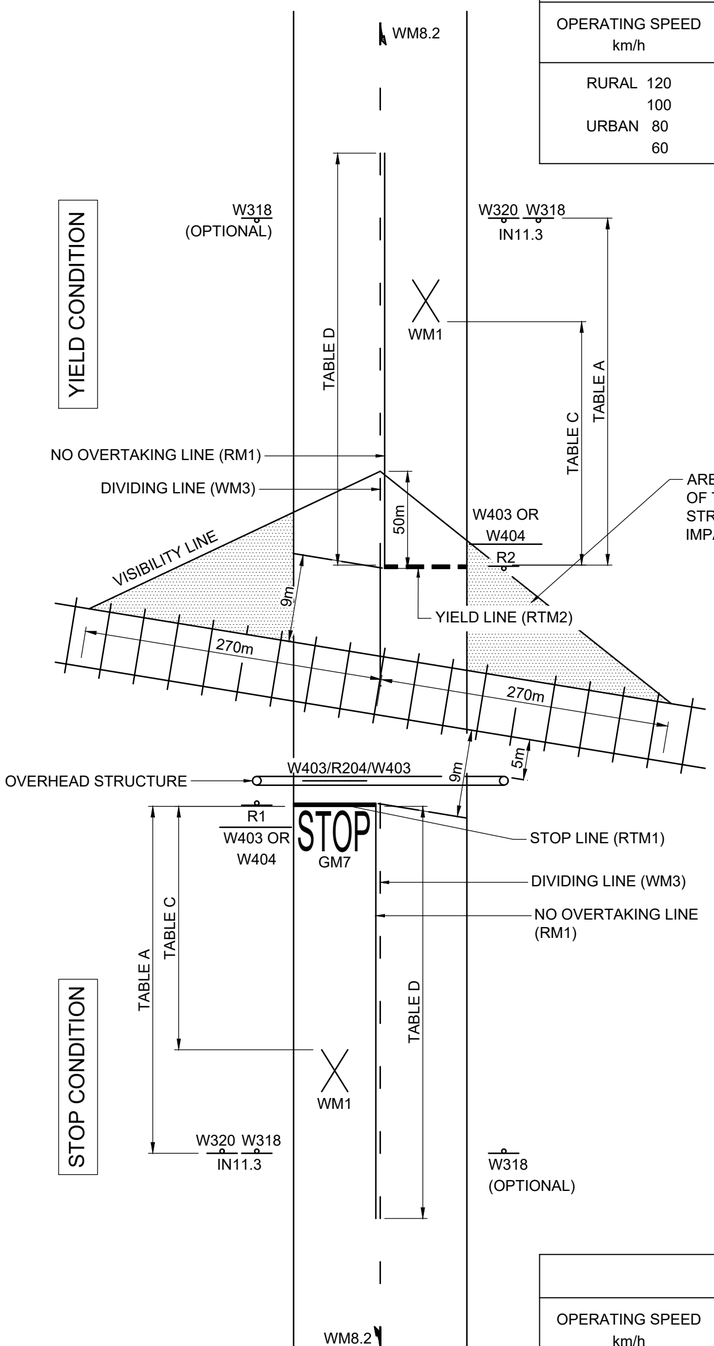

SURFACED ROADS

TABLE B		
OPERATING SPEED km/h	LOCATION DIST. FROM HAZARD (m)	SIZE
RURAL 120	120	1500
100	100	1500
URBAN 80	80	1200
60	60	900

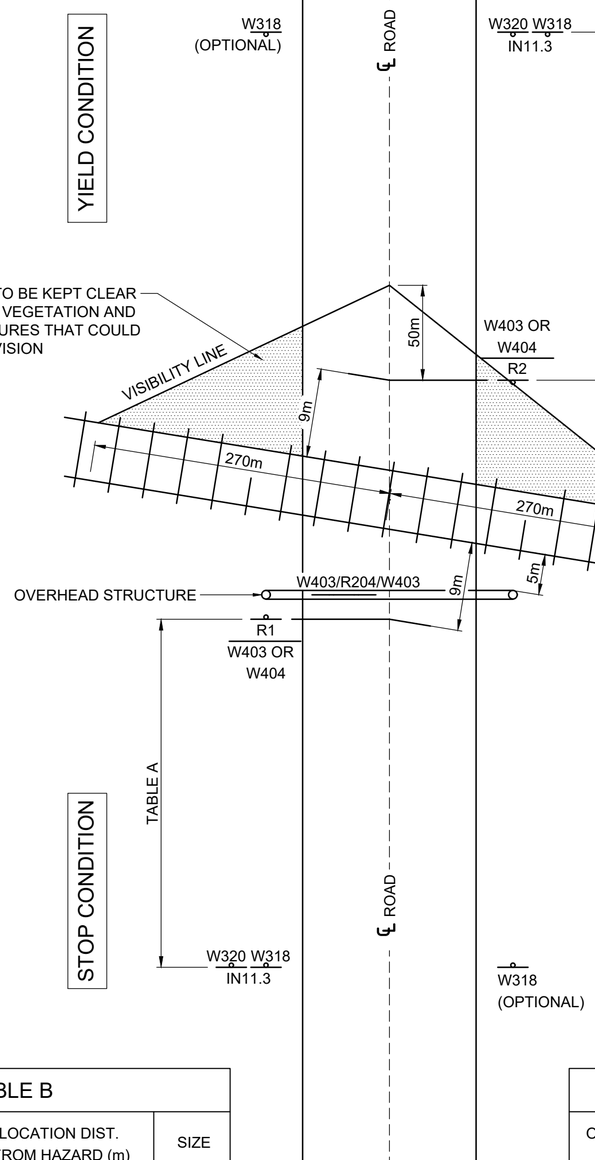

GRAVEL ROADS

TABLE D	
OPERATING SPEED km/h	LENGTH (m)
RURAL 120	460
100	360
URBAN 80	275
60	180

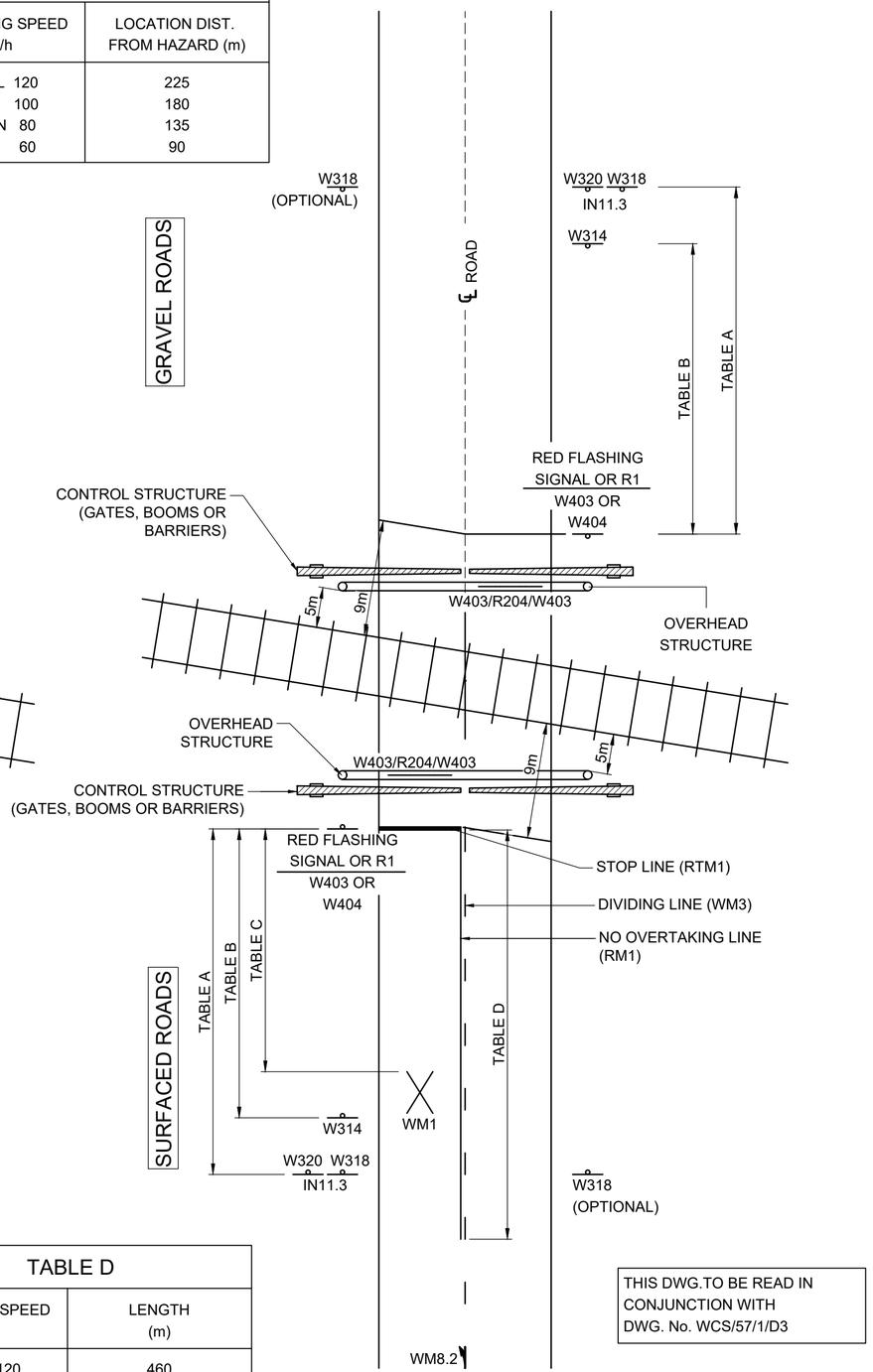

THIS DWG.TO BE READ IN CONJUNCTION WITH DWG. No. WCS/57/1/D3

GUARDED LEVEL CROSSINGS

No.	DATE	ADDITIONS AND AMENDMENTS
0	OCT - 2023	ORIGINAL VERSION

STANDARD PLANS

WESTERN CAPE GOVERNMENT
DEPARTMENT OF INFRASTRUCTURE
TRANSPORT INFRASTRUCTURE BRANCH

ROAD MARKINGS

POSITIONING OF ROAD SIGNS AND MARKING AT LEVEL CROSSINGS

SCALE : N.T.S.

A2 ORIGINAL

INDEX NO. WCS/57/1/D4

PLAN NO. SHEET 4 OF 6

TABLE A				
ADVANCE WARNING SIGNS - LOCATION & SIZE				
OPERATING SPEED km/h	LOCATION DISTANCE FROM HAZARD (m)	W215 SIZE (mm)	GS101 SIZE (mm)	W401 SIZE (mm)
120	330	1500	2400x1800	800x200
100	240	1500	1800x1200	800x200
80	160	1200	1600x1200	600x150
60	120	900	1200x 900	600x150

TABLE B			
SPACING OF LANE REDUCTION ARROWS			
OPERATING SPEED (km/h)	DISTANCE TO LAST ARROW (m)	MARKING SPACING (m)	
		URBAN	RURAL & FREEWAY
60	96	27	36
80	120	36	36
100-120	144-192	-	48

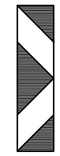

W401



W215

APPLICABLE TO < 1000 VPD

LETTERING = DIN B (210/150)

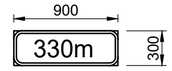

IN11.3

SUPPLEMENTARY PLATE



GS101

APPLICABLE TO > 1000 VPD AND FREEWAYS

ADVANCE WARNING SIGNS W215 AND GS101 TO BE SUPPLEMENTED BY A DISTANCE INFORMATION PLATE (IN11.3) IF LOCATION OF HAZARD > 300m.

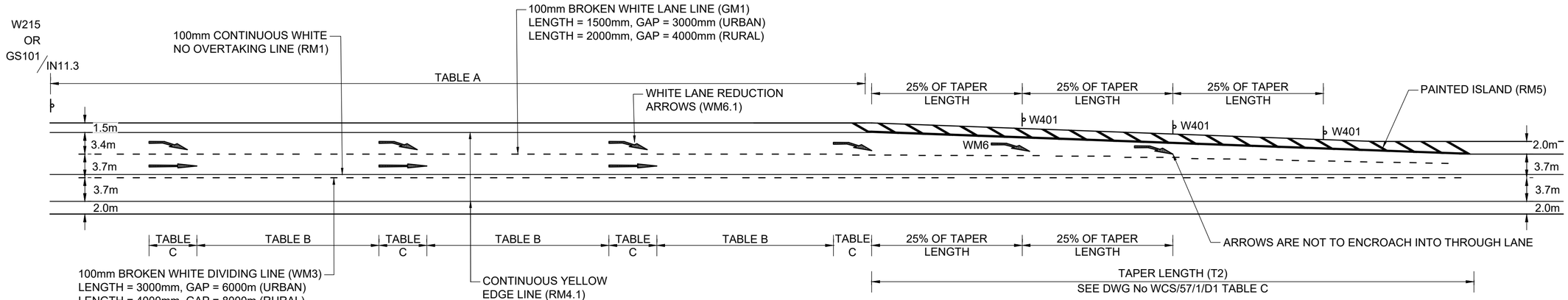

TYPICAL APPLICATION OF LANE REDUCTION MARKINGS

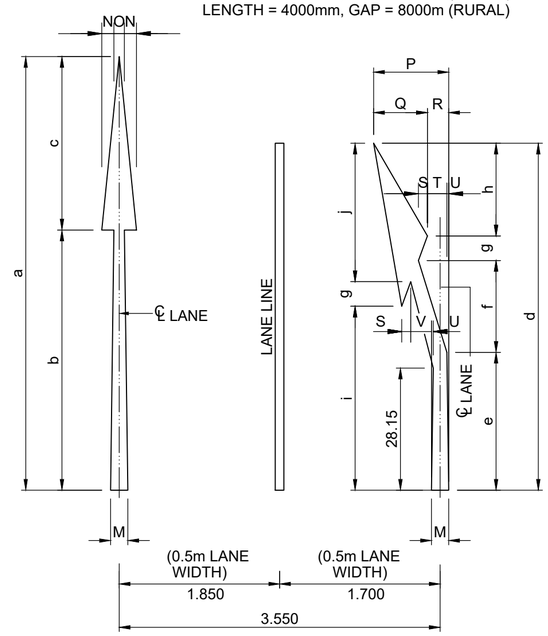

WM6.3

LANE REDUCTION AHEAD FROM RIGHT TO LEFT

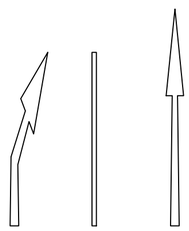

WM6.1

LANE REDUCTION AHEAD FROM LEFT TO RIGHT

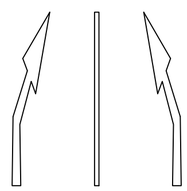

WM6.2

LANE REDUCTION AHEAD FROM LEFT AND RIGHT

NOTES :

1. LANE REDUCTION ROAD MARKINGS SHALL BE WHITE.
2. PREFERABLY 3 MARKINGS SHOULD BE USED BUT ON SHORT AUXILIARY LANES 2 MARKINGS WILL BE ADEQUATE.
3. ADVANCE WARNING SIGNS W215 OR GS101 SHOULD BE USED IN CONJUNCTION WITH LANE REDUCTION MARKINGS AS APPROPRIATE.
4. LANE REDUCTION MARKINGS SHOULD BE POSITIONED IN RELATION TO THE LANE LINES AS SHOWN.

ALL ROAD SIGNS AND MARKINGS TO CONFORM TO SADC-RTSM LATEST EDITION

TABLE C												
ARROW DIMENSIONS												
OPERATING SPEED (km/h)	TYPICAL APPLICATIONS	a	b	c	d	e	f	g	h	i	j	k
30 - 40	CITY CENTRE	4000	2400	1600	3200	1271	847	227	855	1696	1277	1126
50 - 60	URBAN ROADS	5000	3000	2000	3000	1589	1058	1284	1069	2120	1596	1407
70 - 90	URBAN ARTERIAL/ RURAL EXPRESS	7500	4500	3000	6000	2384	1587	426	1603	3180	2394	2111
100 - 120	RURAL ROADS/ FREEWAYS	12000	7200	4800	9600	3814	2539	681	2566	5089	3830	3377
ALL OPERATING SPEEDS AND APPLICATIONS		M	N	O	P	Q	R	S	T	U	V	
		300	210	180	1300	898	402	155	370	32	390	

No.	DATE	ADDITIONS AND AMENDMENTS
0	OCT - 2023	ORIGINAL VERSION

STANDARD PLANS

WESTERN CAPE GOVERNMENT
DEPARTMENT OF INFRASTRUCTURE
TRANSPORT INFRASTRUCTURE BRANCH

ROAD MARKINGS

ROAD MARKINGS FOR LANE REDUCTION

SCALE : N.T.S.

A2 ORIGINAL

INDEX NO. WCS/57/1/D5

PLAN NO. SHEET 5 OF 6

TABLE A		
ADVANCE WARNING SIGNS W327 LOCATION AND SIZE		
OPERATING SPEED (km/h)	LOCATION DIST. FROM HAZARD (m)	SIZE (mm)
RURAL 120	330	1500
100	240	1500
URBAN 80	160	1200
60	120	900

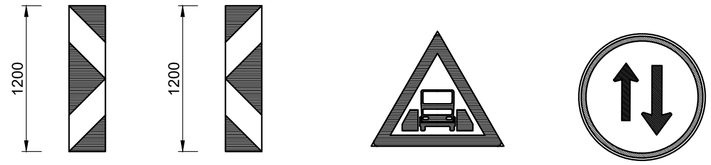

W401 W402 W327 R6

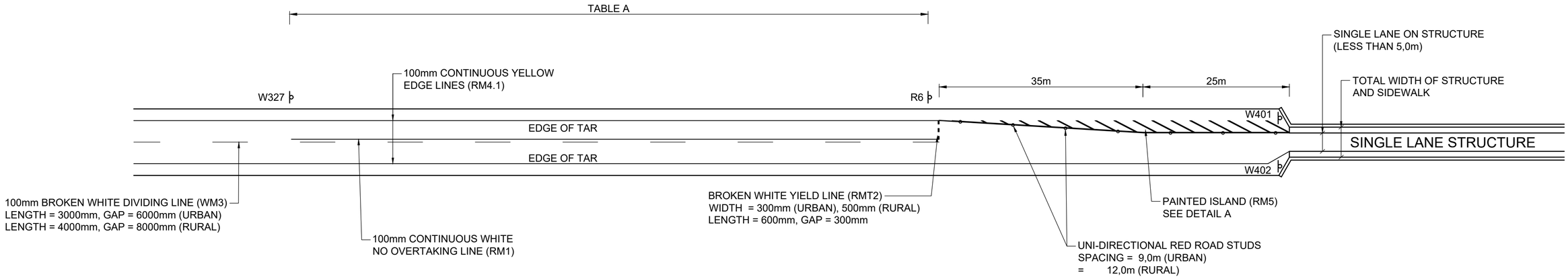

ALL ROAD SIGNS AND MARKINGS TO CONFORM TO SADC-RTSM LATEST EDITION

DIAGRAMMATIC LAYOUT

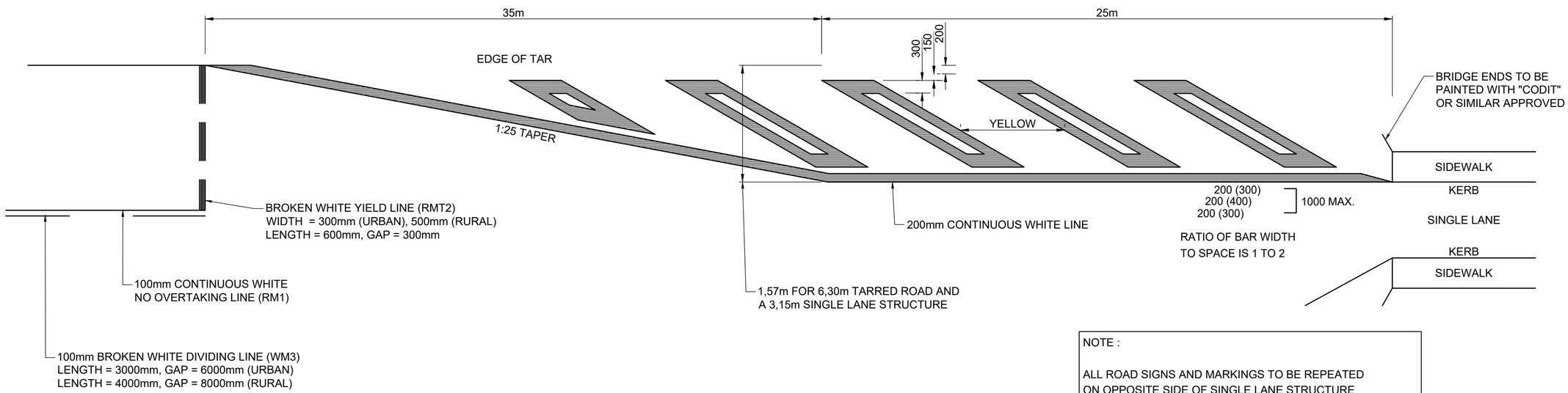

NOTE :

ALL ROAD SIGNS AND MARKINGS TO BE REPEATED ON OPPOSITE SIDE OF SINGLE LANE STRUCTURE

DETAIL A

No.	DATE	ADDITIONS AND AMENDMENTS
0	OCT - 2023	ORIGINAL VERSION

STANDARD PLANS

WESTERN CAPE GOVERNMENT
DEPARTMENT OF INFRASTRUCTURE
TRANSPORT INFRASTRUCTURE BRANCH

ROAD MARKINGS

ROAD SIGNS AND MARKINGS AT SINGLE LANE STRUCTURE

SCALE : N.T.S.

A2 ORIGINAL

INDEX NO. WCS/57/1/D6

PLAN NO. SHEET 6 OF 6

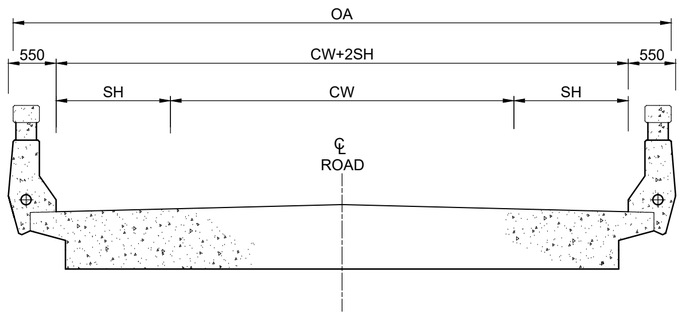

CROSS-SECTION TYPE B1

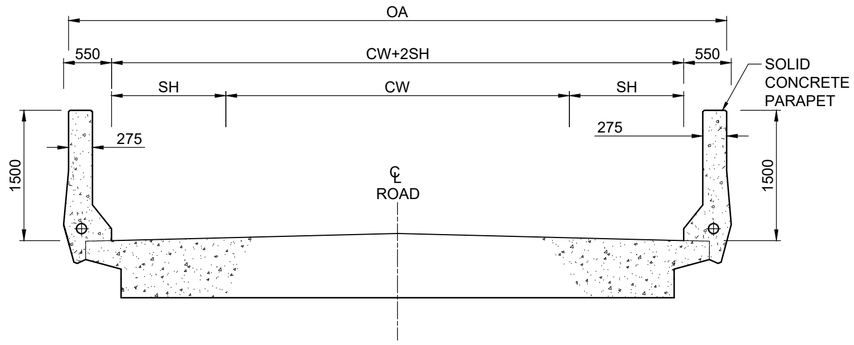

CROSS-SECTION TYPE R1

NOTES :

1. PROVINCIAL TRUNK ROAD BRIDGES NOT TO BE OF STATUS LOWER THAN CLASS II.
2. SHOULDERS ARE DELINEATED BY YELLOW PAINTED LINES AT CARRIAGEWAY EDGES.
3. PARAPET HEIGHTS ON ROAD/RAIL BRIDGES IN ACCORDANCE WITH SATS 1983 BRIDGE CODE.
4. CROSS SECTIONS TO TOP OF ASPHALT.
5. FOR STRUCTURE NUMBERS REFER TO DWG. No. WCS/60/8/D1.

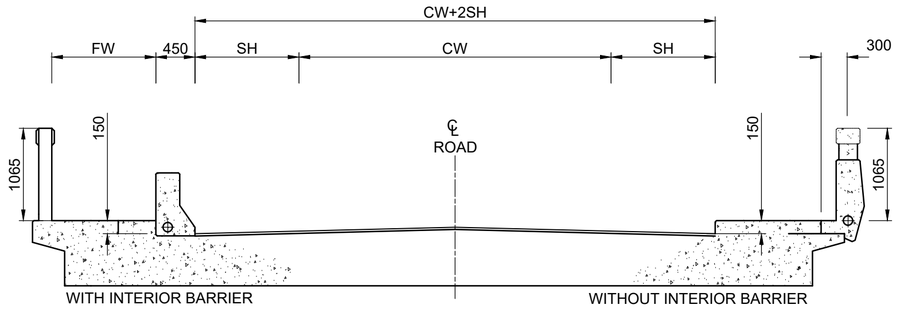

CROSS-SECTION TYPE B2
TYPE B: ROAD/ROAD AND ROAD/RIVER BRIDGES

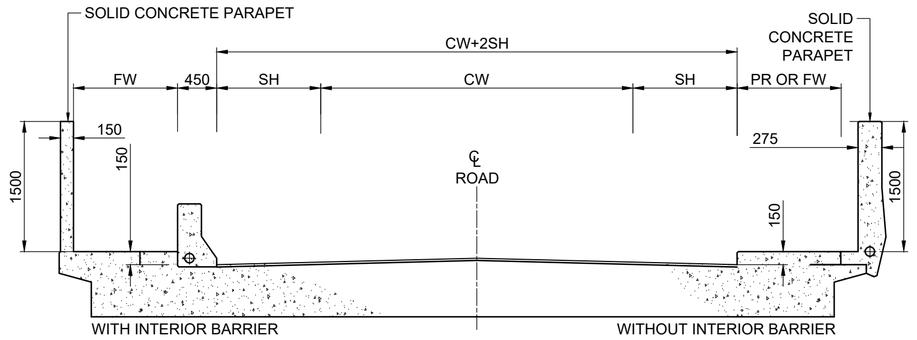

CROSS-SECTION TYPE R2
TYPE R: ROAD/RAIL BRIDGES

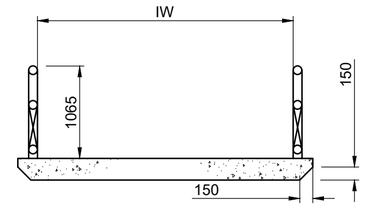

CYCLISTS / HIGH PEDESTRIAN TRAFFIC IW = 3,00
HIGH PEDESTRIAN TRAFFIC IW = 2,50
LOW PEDESTRIAN TRAFFIC IW = 2,00

DECK CROSS-SECTION OF
PEDESTRIAN UNDERPASS

ROAD CLASS	TRAFFIC COUNT EVU'S PER DAY	CARRIAGE WAY WIDTH CW	STANDARD RURAL SINGLE CARRIAGEWAY BRIDGE WIDTHS									
			TYPE B1 AND R1			TYPE B2 AND R2						
			BALUSTRADES			INTRODUCED FOOTWALK			EXTERIOR PEDESTRIAN REFUGE/FOOTWALK			
			OVERALL (MIN) OA	SHOULDER SH	BETWEEN KERBS CW+2SH	SHOULDER SH	BETWEEN KERBS CW+2SH	FOOTWALK (MIN) FW	SHOULDER SH	BETWEEN KERBS CW+2SH	PEDESTRIAN REFUGE PR	FOOTWALK (MIN) FW
PROV.CLASS I	1000-2000	7,40	12,30	2,00	11,40	1,20	9,80	1,20	2,40	12.2	0,80	1,20
PROV.CLASS II	400-1000	6,80	10,70	1,50	9,80	0,90	8,60	1,20	1,80	10,40	0,80	1,20
PROV.CLASS III	< 400	6,80	9,50	0,90	8,60	0,60	8,00	1,20	1,20	9,20	0,80	1,20
PROV.CLASS IV SINGLE LANE (TYPE B1 & B2 0NLY)										4,00	0,80	

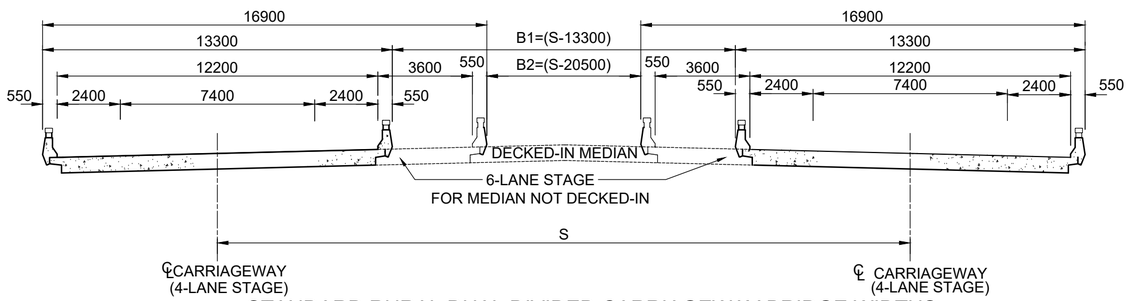

STANDARD RURAL DUAL DIVIDED CARRIAGEWAY BRIDGE WIDTHS

BRIDGE MEDIAN DECKED-IN WHEN:
1. B1 OR B2 < 22m; BRIDGE LENGTH < 6m or
2. B1 OR B2 < 12m; BRIDGE LENGTH < 15m or
3. B1 OR B2 < 6m; BRIDGE LENGTH < 30m or
4. B1 OR B2 < 3m;

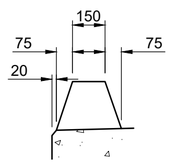

DETAIL A

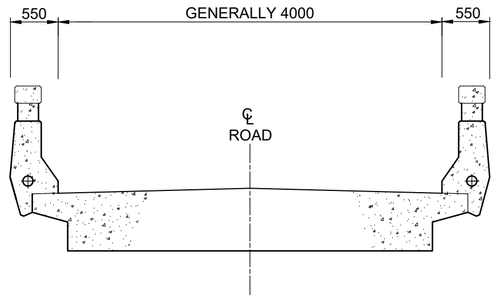

DECK CROSS-SECTION OF
AGRICULTURAL UNDERPASS

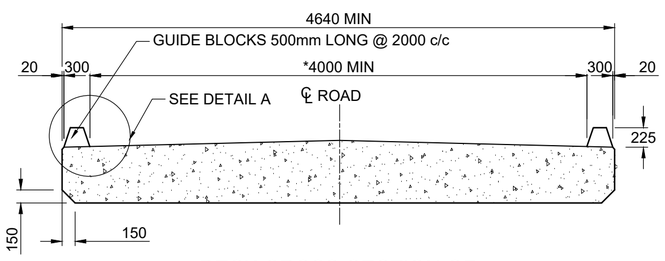

*GENERALLY CLEAR WIDTHS OF BETWEEN 4.0 AND 7.0 M SHOULD BE AVOIDED, AS THESE WIDTHS CREATE THE IMPRESSION THAT IT IS A TWO-LANE STRUCTURE, ALTHOUGH VEHICLES CANNOT PASS EACH OTHER SAFELY WITHIN THIS SPACE.

DECK CROSS-SECTION OF
SINGLE LANE LOW LEVEL BRIDGE

No.	DATE	ADDITIONS AND AMENDMENTS
0	OCT - 2023	ORIGINAL VERSION

STANDARD PLANS

WESTERN CAPE GOVERNMENT
DEPARTMENT OF INFRASTRUCTURE
TRANSPORT INFRASTRUCTURE BRANCH

BRIDGES

RURAL STRUCTURE STANDARD WIDTHS

SCALE : N.T.S.

A2 ORIGINAL

INDEX NO.
WCS/60/1/D1

PLAN NO.
SHEET 1 OF 2

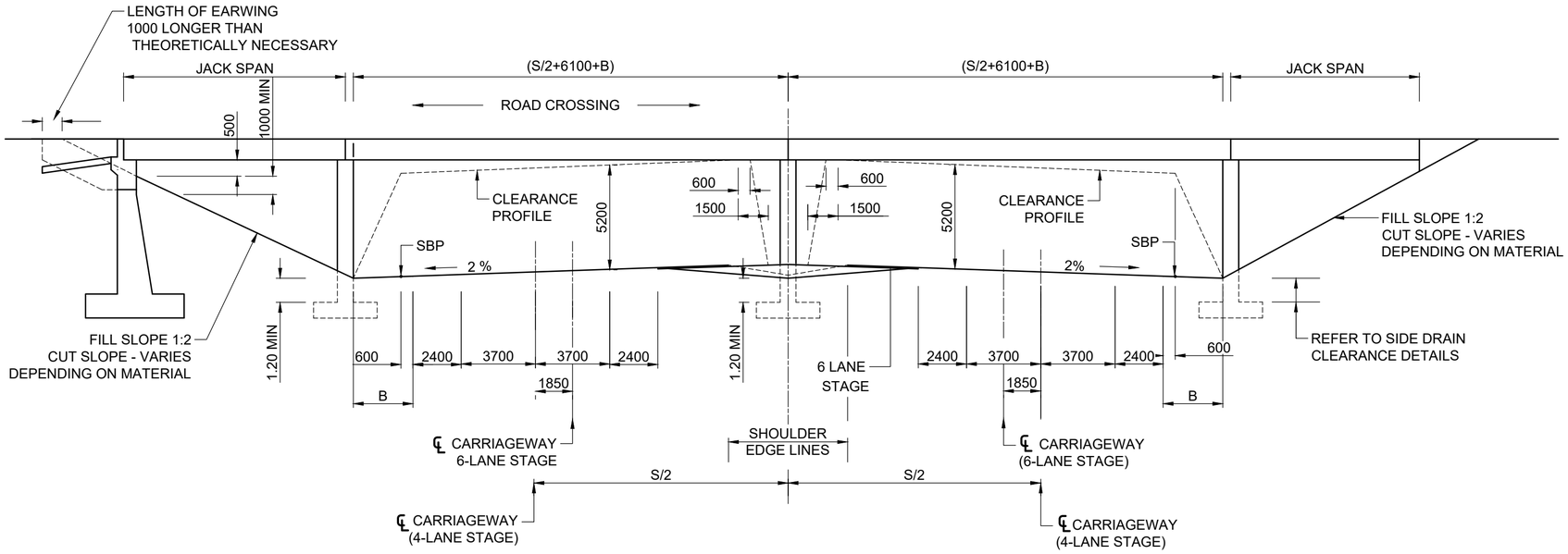

TYPICAL CROSS-SECTION OF DUAL DIVIDED CARRIAGEWAY UNDERPASS

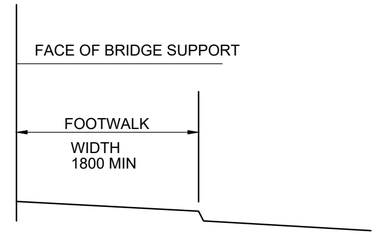

CLEARANCE FOR UNDERPASSING ROADS WITH FOOTWALKS

MINIMUM VERTICAL CLEARANCES	mm
EXISTING BRIDGES (AFTER FUTURE OVERLAYS)	5000
NEW BRIDGES	5200
BEAM AND SLAB BRIDGES AND AGRICULTURAL UNDERPASSES	5600
SERVICE, PEDESTRIAN AND PIPE BRIDGES BRIDGES	6000

E.F.W. = EFFECTIVE FORMATION WIDTH

SBP = SHOULDER BREAKPOINT

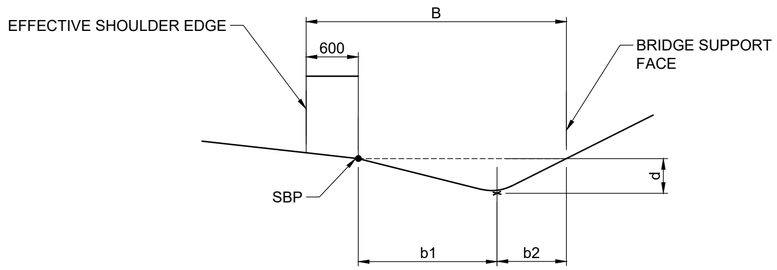

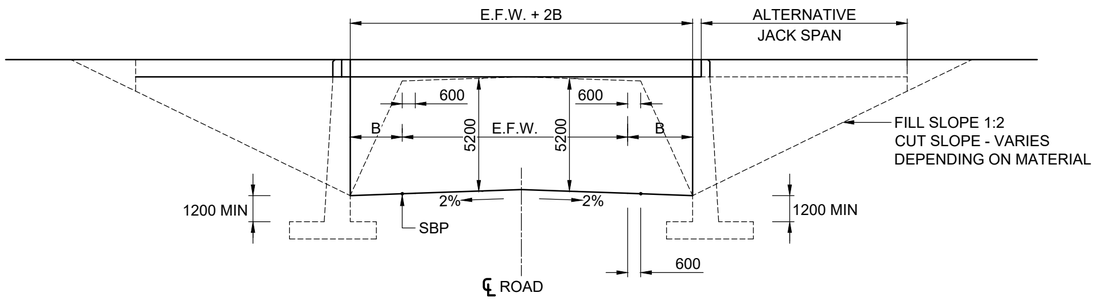

TYPICAL CROSS-SECTION OF SINGLE CARRIAGEWAY UNDERPASS AND SINGLE/DUAL CARRIAGEWAY OVERPASS

NOTES:

1. NORMALLY A STRUCTURE COMPRISING OF SOLID ABUTMENTS AND WINGWALLS IS FAVOURED. UTILISATION OF JACK SPANS AS ALTERNATIVE PERMITTED ON ECONOMIC GROUNDS ONLY.
2. WHERE, FOR CLASS II AND III ROADS, FUTURE IMPROVEMENT TO CLASS I STANDARD IS CONTEMPLATED, USE A CLASS I E.F.W.

TYPE OF OVERPASS	INTERNAL WIDTH(mm)	INTERNAL HEIGHT(mm)
	4,00[1]	4,00[2]
CYCLISTS & PEDESTRIAN	3,00	2,50
PEDESTRIAN	2,50	2,50
STOCK- LENGTH <15m	2,00	2,00
STOCK- LENGTH >15m	2,50	2,50

NOTES:

1. MAY BE INCREASED TO 5500 FOR HARVESTERS.
2. IF ALTERNATE ROUTE PROVIDING 5200 DOES NOT EXIST, PROVIDE 5200. MAY BE REDUCED TO 2500m IF AGREED TO BY FARMER. MAY BE INCREASED TO 4600m FOR HARVESTERS.

AGRICULTURAL, PEDESTRIAN OR STOCK OVERPASS

SIDE DRAIN CLEARANCE (mm)				
CLASS OF ROAD	d	b1	b2	B
PROVINCIAL FREEWAY	400	1600	800	3000
DUAL				
CLASS I				
CLASS II				
CLASS III	300	1000	600	2200

NOTES:

1. FOR APPROPRIATE SIDE DRAIN DESIGN AMENDMENT, AND IN LIMITING CONDITIONS, B MAY BE REDUCED TO 1500 MIN.
2. B TO BE INCREASED WHERE NECESSARY TO SATISFY STOPPING SIGHT DISTANCE REQUIREMENTS AT CURVES.

SIDE DRAIN AND CLEARANCE DETAILS

No.	DATE	ADDITIONS AND AMENDMENTS
0	OCT - 2023	ORIGINAL VERSION

STANDARD PLANS

WESTERN CAPE GOVERNMENT
DEPARTMENT OF INFRASTRUCTURE
TRANSPORT INFRASTRUCTURE BRANCH

BRIDGES

RURAL STRUCTURE STANDARD CLEARANCES

SCALE : N.T.S.

A2 ORIGINAL

INDEX NO.
WCS/60/1/D2

PLAN NO.
SHEET 2 OF 2

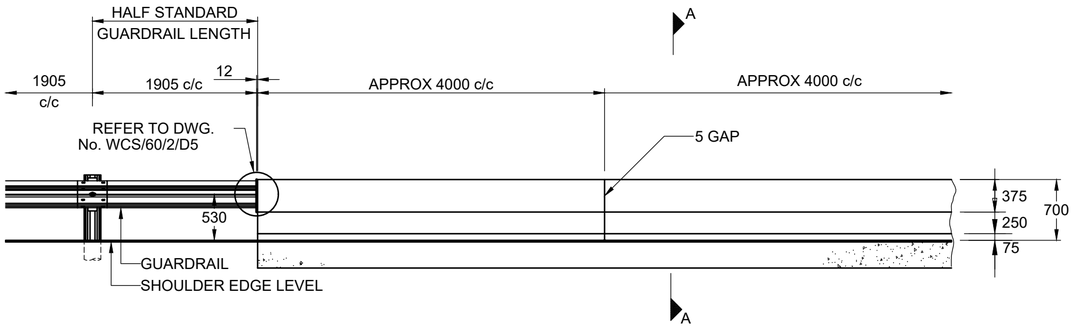

INSIDE ELEVATION OF BALUSTRADE - TYPE A

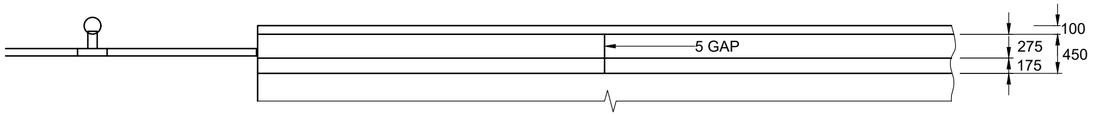

PLAN OF BALUSTRADE - TYPE A

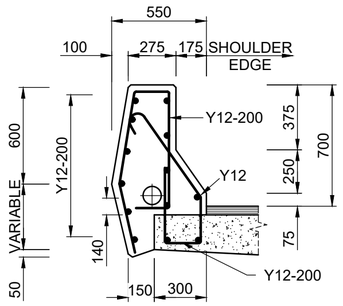

SECTION A - A
TYPE A

NOTES:

1. ALL EXPOSED SHARP EDGES TO HAVE 20 x 20mm CHAMFERS.
2. 40 CLEAR COVER TO REINFORCEMENT UNLESS OTHERWISE STATED.
3. BALUSTRADE CONCRETE : CLASS 40/20.
4. THIS PLAN DOES NOT APPLY TO BRIDGES OVER RAILWAY TRACKS NOR DOES IT APPLY TO LOW LEVEL RIVER BRIDGES.
5. PROVIDE, IN ADDITION, APPROPRIATE CLASS OF BALUSTRADE ON BRIDGE RETURN WALLS AND ON RETAINING WALLS ADJACENT TO ROADS, AS NECESSARY.
6. FOR BALUSTRADE TYPES A TO D INCREASE TRANSVERSE GAP WIDTHS AS REQUIRED TO SATISFY BRIDGE EXPANSION JOINTS.
7. THIS DRAWING TO BE READ IN CONJUCTION WITH DWG. No. WCS/60/2/D2, WCS/60/2/D6 AND WCS/60/2/D7.
8. DECK REINFORCEMENT NOT SHOWN.
9. FOR STRUCTURE NUMBERS REFER TO DWG. No. WCS/60/8/D1.
10. SERVICE DUCT 110mm Ø uPVC PIPE.
11. ALL BALUSTRADE REINFORCEMENT SHALL BE HEAVY DUTY HOT-DIP GALVANIZED WITH AN 85 MICRON COATING IN ACCORDANCE WITH SANS 121:200.

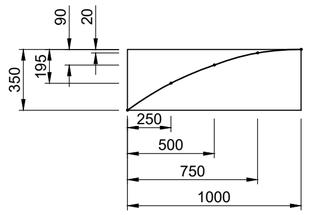

PARABOLIC PROFILE

BALUSTRADE LENGTH	DESIGNATION	FILL ON DECK	HEIGHT *	BALUSTRADE TYPE
0<L≤20m	CULVERT	150 MIN	< 3m	HEADWALL ONLY
0<L≤20m	CULVERT	< 1m	≥ 3m	GUARDRAIL ON CULVERT
0<L≤20m	CULVERT	≥ 1m	≥ 3m	GUARDRAIL ON FILL
6<L≤20m	BRIDGE	-	< 3.5m	TYPE A
6<L≤20m	BRIDGE	-	≥ 5m	TYPE B
L>20m	BRIDGE	-	ANY HEIGHT	TYPE B
ON ALL ROAD GRADE SEPARATION STRUCTURES WHERE BALUSTRADE LENGTH ≥ 15m				TYPE B

*THE HEIGHT IS MEASURED FROM STREAM BED TO ROAD LEVEL

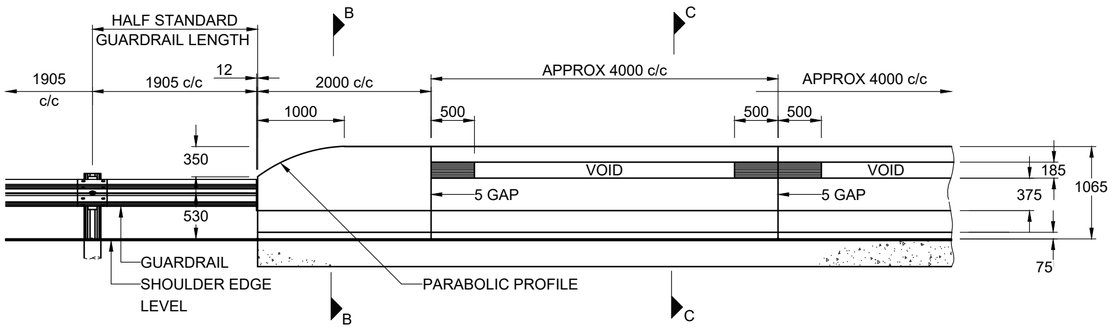

INSIDE ELEVATION OF BALUSTRADE - TYPE B

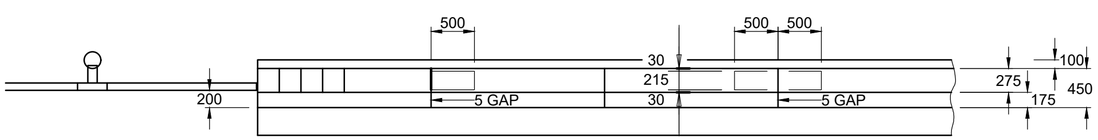

PLAN OF BALUSTRADE - TYPE B

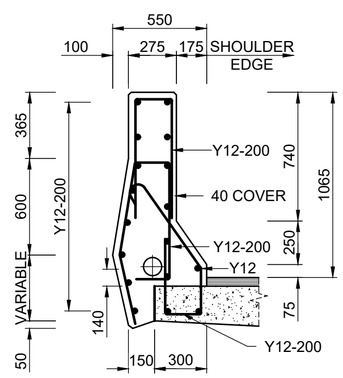

SECTION B - B
TYPE B

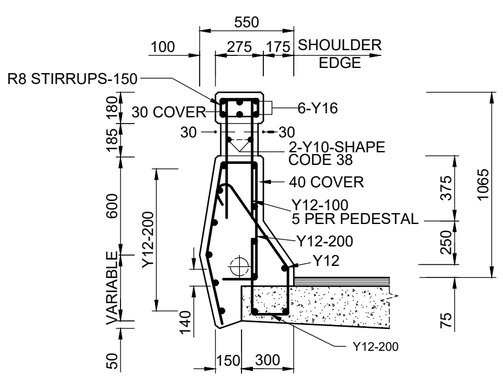

SECTION C - C
TYPE B

No.	DATE	ADDITIONS AND AMENDMENTS
0	OCT - 2023	ORIGINAL VERSION

STANDARD PLANS

WESTERN CAPE GOVERNMENT
DEPARTMENT OF INFRASTRUCTURE
TRANSPORT INFRASTRUCTURE BRANCH

BALUSTRADES AND BARRIERS

DETAILS OF TYPES A AND B CAST IN-SITU BRIDGE BALUSTRADES

SCALE : N.T.S.

A2 ORIGINAL

INDEX NO.
WCS/60/2/D1

PLAN NO.
SHEET 1 OF 6

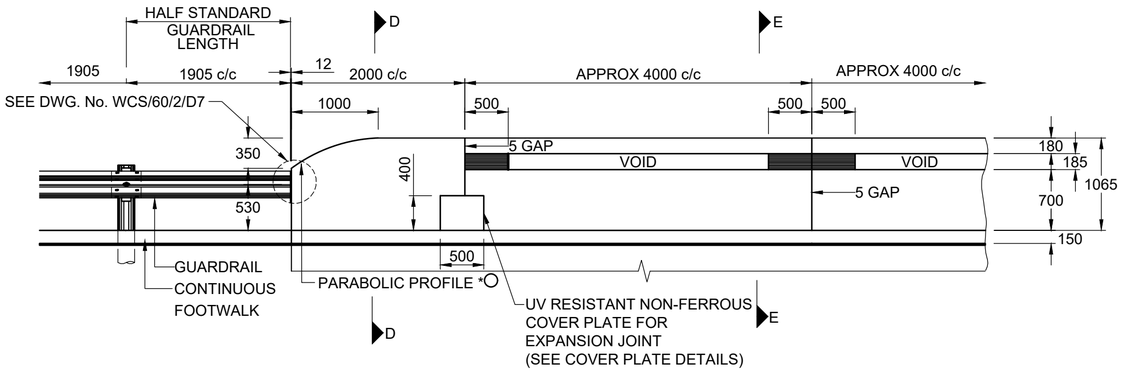

*(SQUARE PROFILE WHERE GUARDRAIL IS REPLACED BY FENCE SEE DWG No WCS/60/2/D6)

INSIDE ELEVATION OF FOOTWALK BALUSTRADE TYPE C

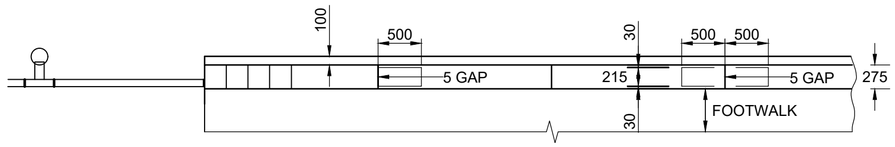

PLAN OF FOOTWALK BALUSTRADE TYPE C

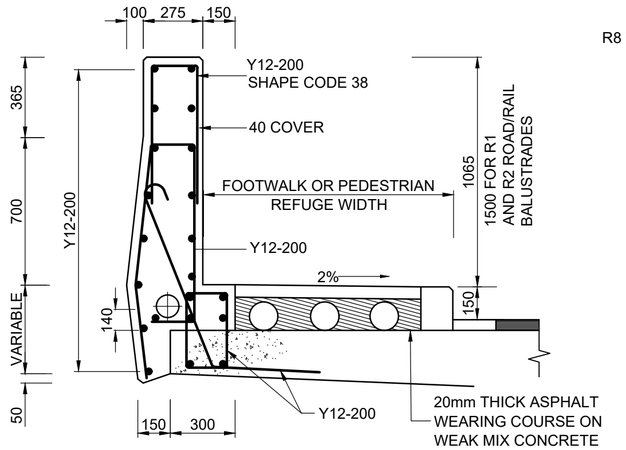

SECTION D - D TYPE C

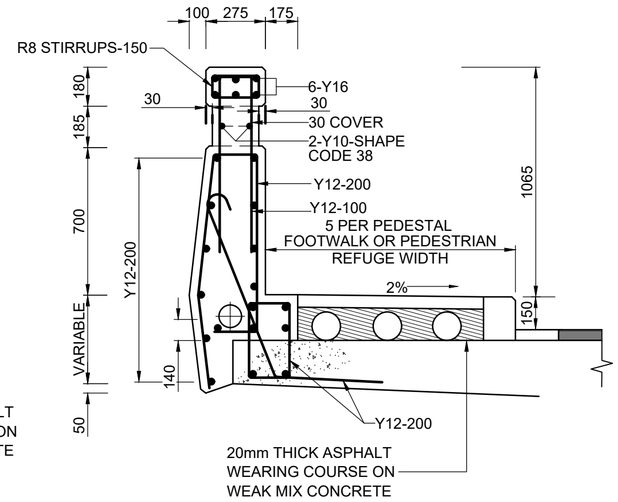

SECTION E - E TYPE C

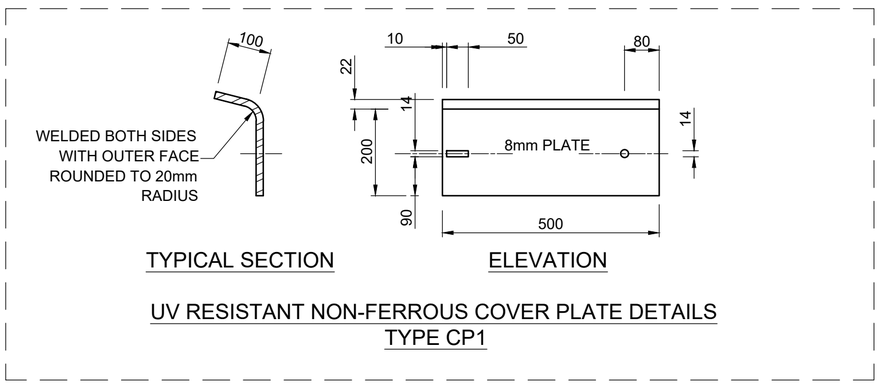

TYPICAL SECTION ELEVATION

UV RESISTANT NON-FERROUS COVER PLATE DETAILS TYPE CP1

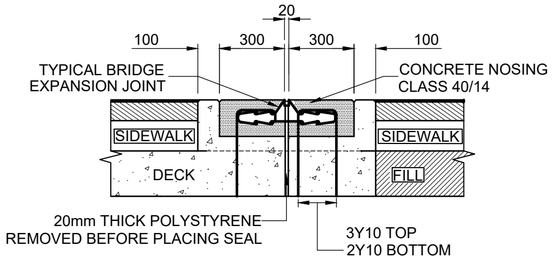

TYPICAL JOINT SECTION A-A AT FOOTWALK

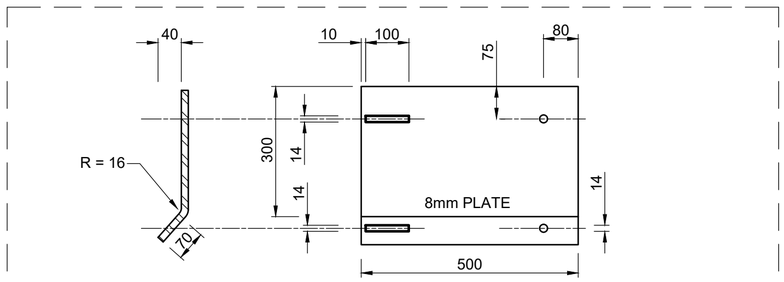

TYPICAL SECTION ELEVATION

UV RESISTANT NON-FERROUS COVER PLATE DETAILS TYPE CP2

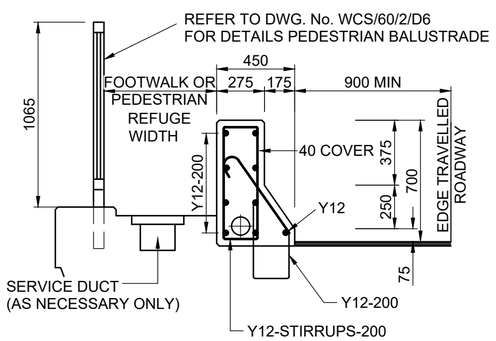

PROTECTED FOOTWALK BALUSTRADE TYPE D

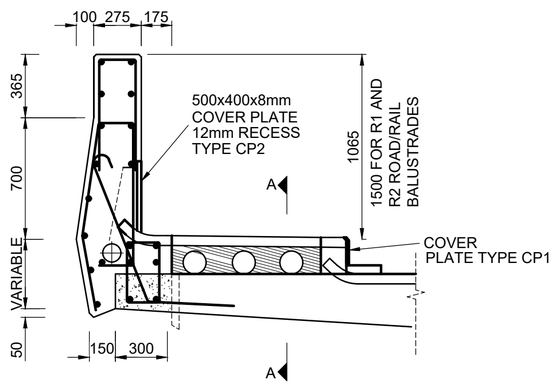

SECTION THROUGH DECK SHOWING TYPICAL EXPANSION JOINT DETAIL

NOTES:

1. ALL EXPOSED SHARP EDGES TO HAVE 20 x 20mm CHAMFERS.
2. 40 CLEAR COVER TO REINFORCEMENT UNLESS OTHERWISE STATED.
3. BALUSTRADE CONCRETE : CLASS 40/20.
4. THIS PLAN DOES NOT APPLY TO LOW LEVEL RIVER BRIDGES. BRIDGE RETURN WALLS AND ON RETAINING WALLS ADJACENT TO ROADS, AS NECESSARY.
6. FOR BALUSTRADE TYPES A TO D INCREASE TRANSVERSE GAP WIDTHS AS REQUIRED TO SATISFY BRIDGE EXPANSION JOINTS.
7. THIS DRAWING TO BE READ IN CONJUCTION WITH DWG. No. WCS/60/2/D1, WCS/60/2/D6 AND WCS/60/2/D7.
8. DECK REINFORCEMENT NOT SHOWN.
9. SERVICE DUCT 110mm Ø uPVC PIPE.
10. ALL BALUSTRADE REINFORCEMENT SHALL BE HEAVY DUTY HOT-DIP GALVANIZED WITH AN 85 MICRON COATING IN ACCORDANCE WITH SANS 121:2000.

No.	DATE	ADDITIONS AND AMENDMENTS
0	OCT - 2023	ORIGINAL VERSION

STANDARD PLANS

WESTERN CAPE GOVERNMENT
DEPARTMENT OF INFRASTRUCTURE
TRANSPORT INFRASTRUCTURE BRANCH

BALUSTRADES AND BARRIERS

DETAILS OF TYPES C AND D CAST IN-SITU BRIDGE BALUSTRADES

SCALE : N.T.S.

A2 ORIGINAL

INDEX NO. WCS/60/2/D2

PLAN NO. SHEET 2 OF 6

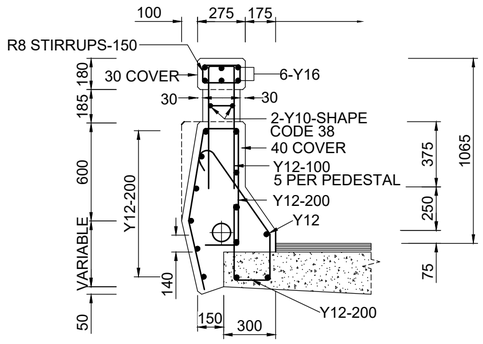

SECTION C - C
TYPE B

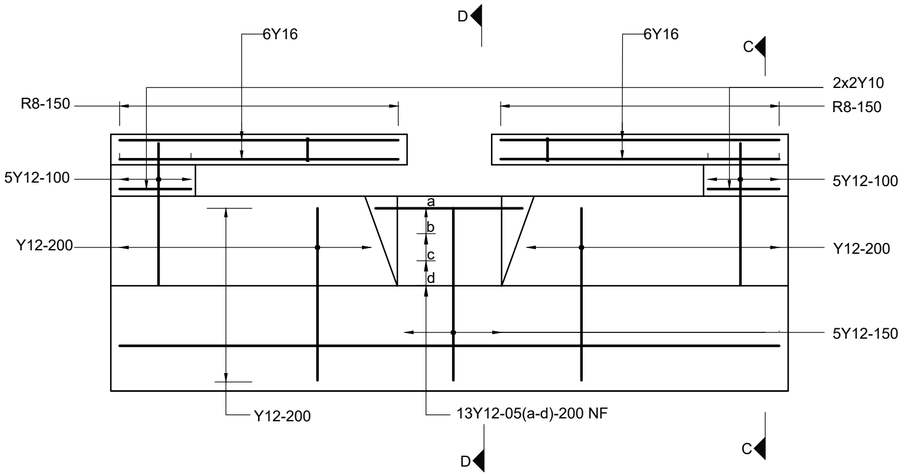

REINFORCEMENT DETAIL
TYPE C

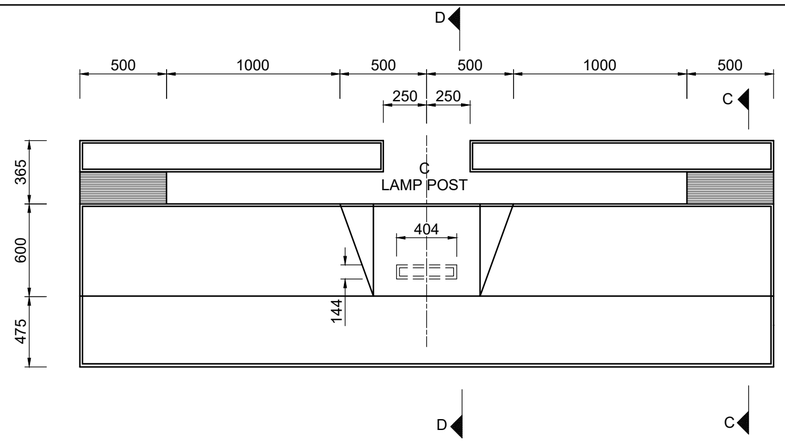

OUTSIDE ELEVATION

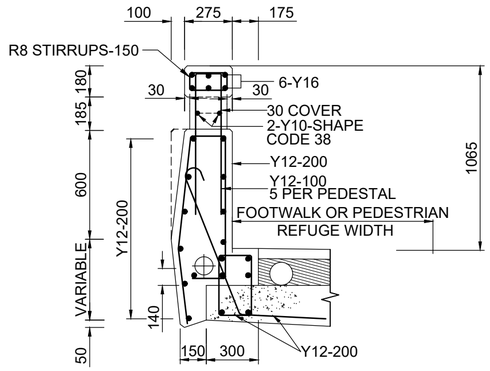

SECTION C - C
TYPE C

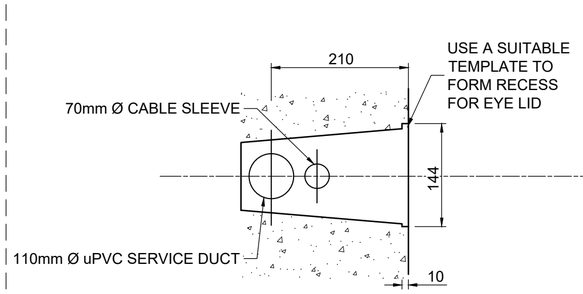

SECTION THROUGH
INSPECTION EYE

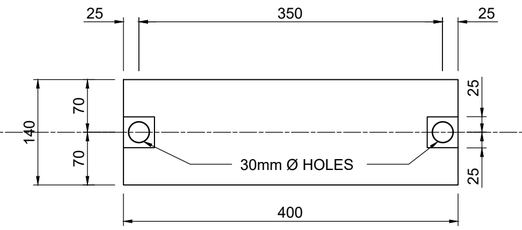

INSPECTION EYE LID
DETAIL A

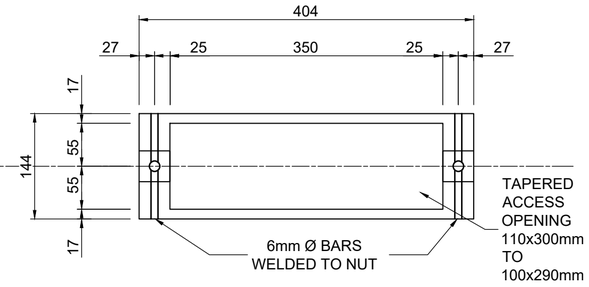

INSPECTION EYE OPENING

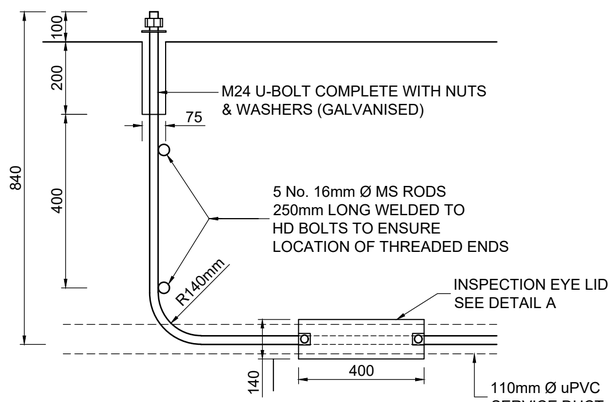

HOLDING DOWN BOLT
INSPECTION EYE DETAIL

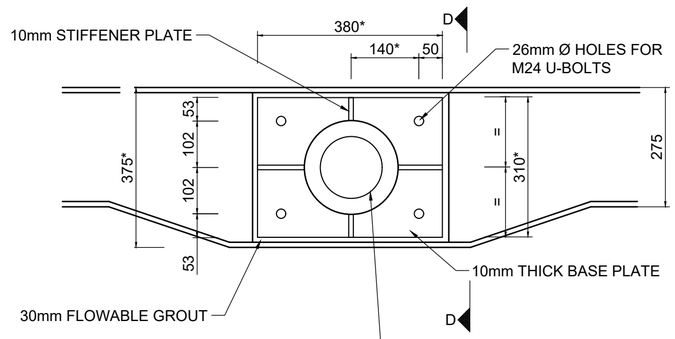

* DIMENSIONS VARIES TO SUIT LAMP POST SIZE

PLAN ON LAMP POST BASE PLATE

NOTES:

1. BOLT & WASHER PLATE MATERIAL - GRADE 300WA WELDS E70XX
2. BOLTS TO BE POSITIONED USING STEEL TEMPLATE
3. ROUND WASHER TO BE USED UNDER NUT AND TO BE OF SUFFICIENT SIZE TO PROVIDE ADEQUATE BEARING AROUND CLEARANCE HOLE IN COLUMN BASE PLATE
4. BOLT SHANKS DEGREASED BEFORE EMBEDDING IN CONCRETE
5. ALL WELD 6mm FILLET WELDS
6. SERVICE DUCT 110mm Ø uPVC PIPE
7. SIZE OF LAMP POST AND BASE PLATE TO BE SPECIFIED BY THE ELECTRICAL ENGINEER

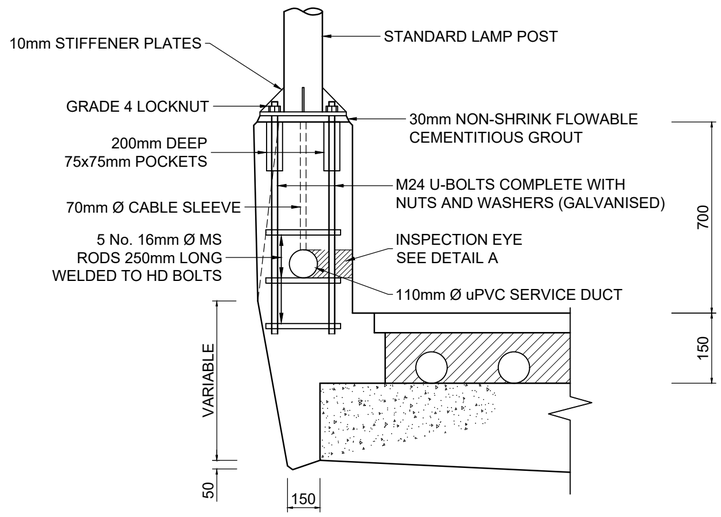

SECTION D - D
TYPE C

No.	DATE	ADDITIONS AND AMENDMENTS
0	OCT - 2023	ORIGINAL VERSION

STANDARD PLANS

WESTERN CAPE GOVERNMENT
DEPARTMENT OF INFRASTRUCTURE
TRANSPORT INFRASTRUCTURE BRANCH

BALUSTRADES AND BARRIERS

DETAILS OF IN SITU TYPES B AND C BRIDGE BALUSTRADES WITH LAMP POSTS

SCALE : N.T.S.

A2 ORIGINAL

INDEX NO.
WCS/60/2/D3

PLAN NO.
SHEET 3 OF 6

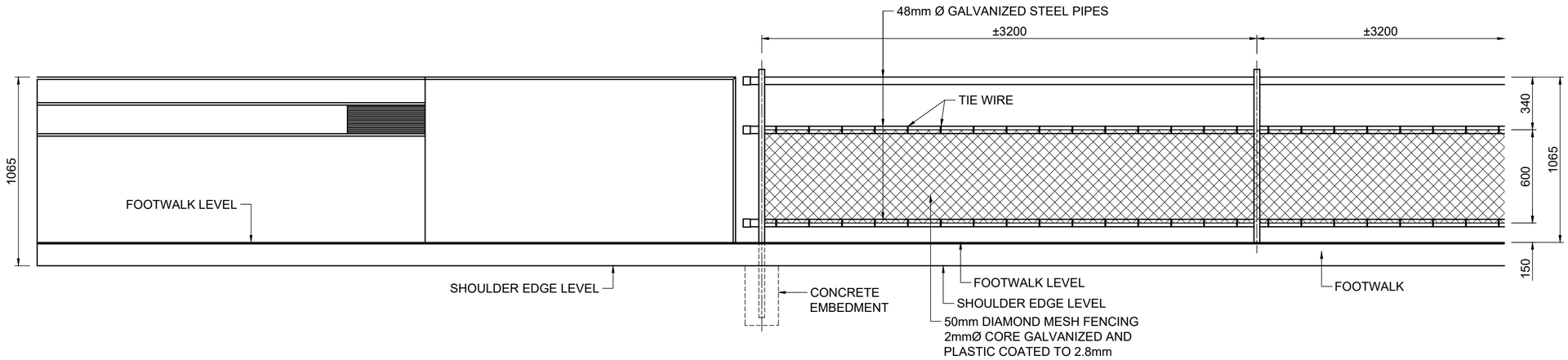

ELEVATION AT FOOTWALK BALUSTRADE

NOTES:
1. ALL PIPE ENDS TO HAVE GALVANIZED STEEL END CAPS
2. MESH TO BE TIED TO 48mm Ø PIPES WITH 2.5mm GALVANIZED WIRE AT EVERY THIRD OPENING. (TYING TO BE DONE USING SEPERATE TIE WIRES AND NOT BY CONTINUOUS SPIRAL WINDING)
3. 50mm DIAMOND MESH IS AVAILABLE IN ROLLS OF 0.6mm WIDE AND 30m LONG.
4. CONCRETE CLASS 20/20.

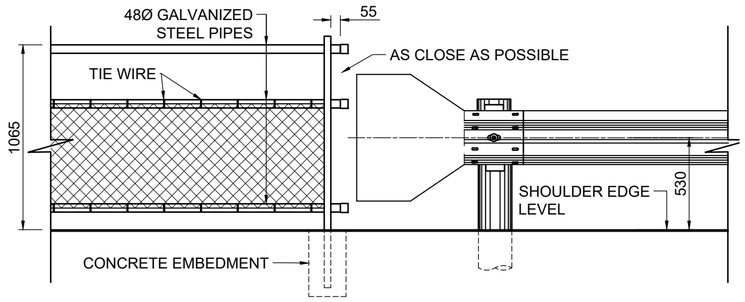

ELEVATION AT GUARDRAIL

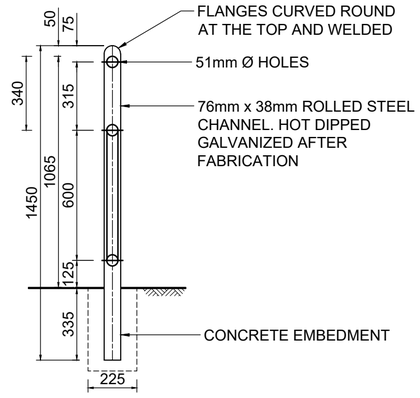

SECTION THROUGH FENCE

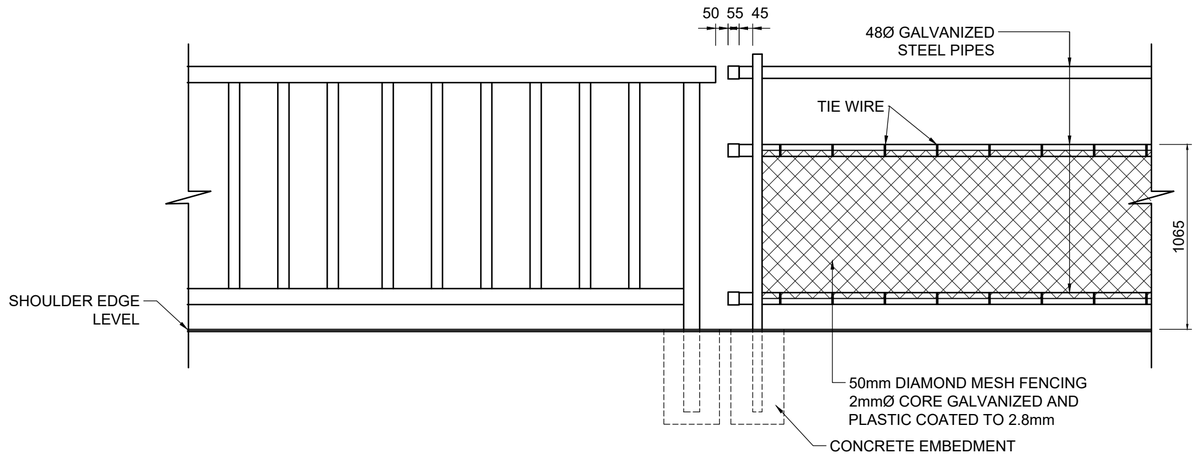

ELEVATION AT PEDESTRIAN BALUSTRADE

No.	DATE	ADDITIONS AND AMENDMENTS
0	OCT - 2023	ORIGINAL VERSION

STANDARD PLANS

WESTERN CAPE GOVERNMENT
DEPARTMENT OF INFRASTRUCTURE
TRANSPORT INFRASTRUCTURE BRANCH

BALUSTRADES AND BARRIERS

FENCING DETAILS AT PEDESTRIAN WALKWAYS

SCALE : N.T.S.

A2 ORIGINAL

INDEX NO.
WCS/60/2/D4

PLAN NO.
SHEET 4 OF 6

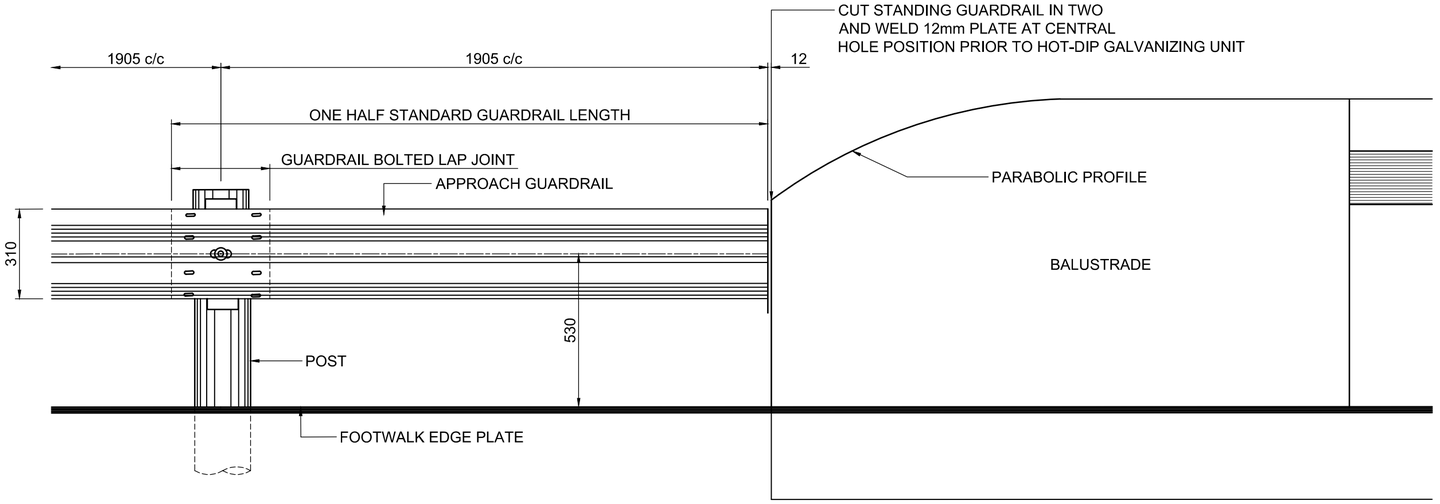

INSIDE ELEVATION OF BALUSTRADE

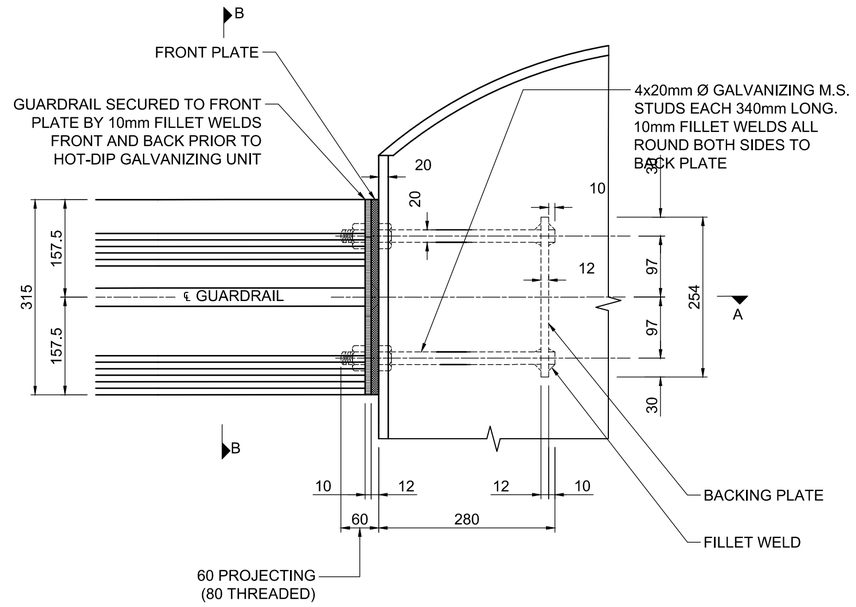

ELEVATION

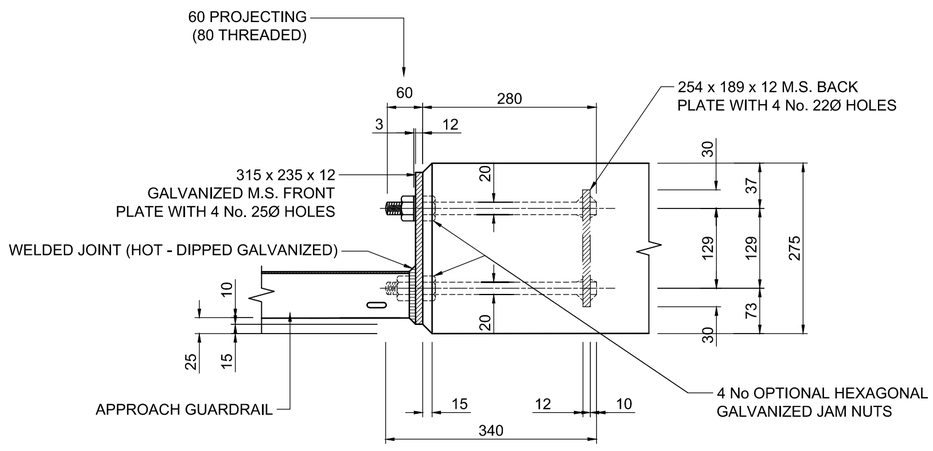

SECTION A - A

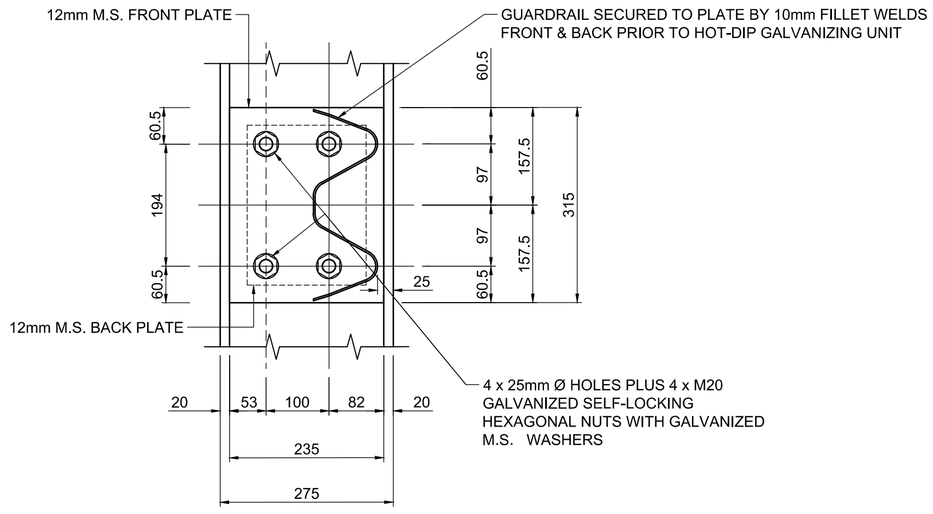

SECTION B - B

NOTE :
THIS DRAWING TO BE READ IN CONJUCTION
WITH DWG. No. WCS/60/2/D1 AND WCS/60/2/D2

No.	DATE	ADDITIONS AND AMENDMENTS
0	OCT - 2023	ORIGINAL VERSION

STANDARD PLANS

WESTERN CAPE GOVERNMENT
DEPARTMENT OF INFRASTRUCTURE
TRANSPORT INFRASTRUCTURE BRANCH

BALUSTRADES AND BARRIERS

DETAILS SHOWING ANCHORING OF GUARDRAILING
TO BALUSTRADE ENDS

SCALE : N.T.S.

A2 ORIGINAL

INDEX NO.
WCS/60/2/D5

PLAN NO.
SHEET 5 OF 6

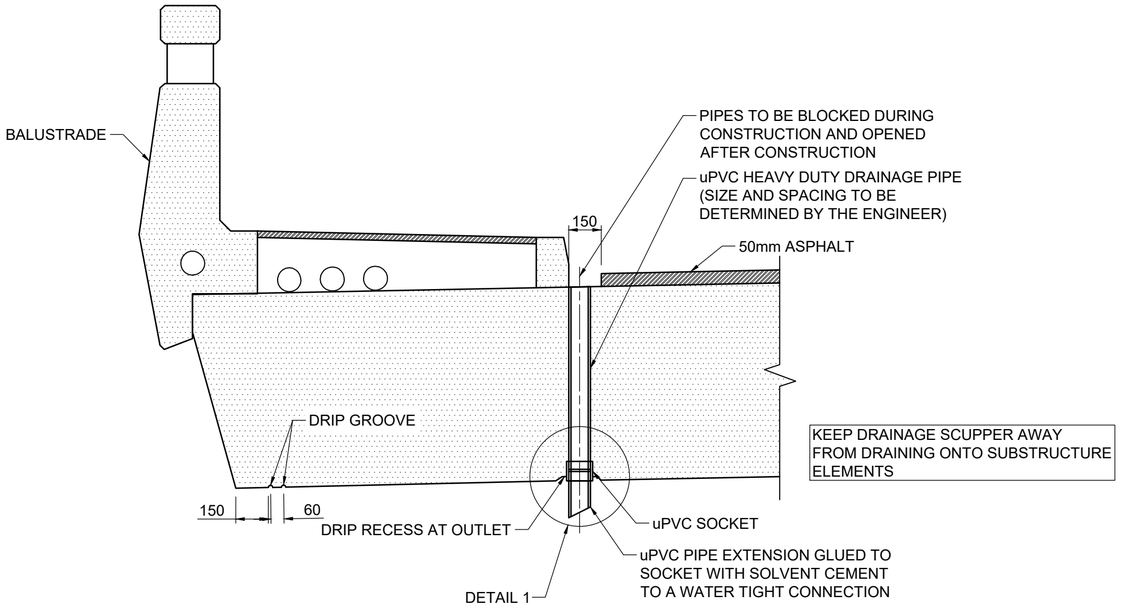

BRIDGE DECK DRAINAGE DETAILS WITH SIDEWALK

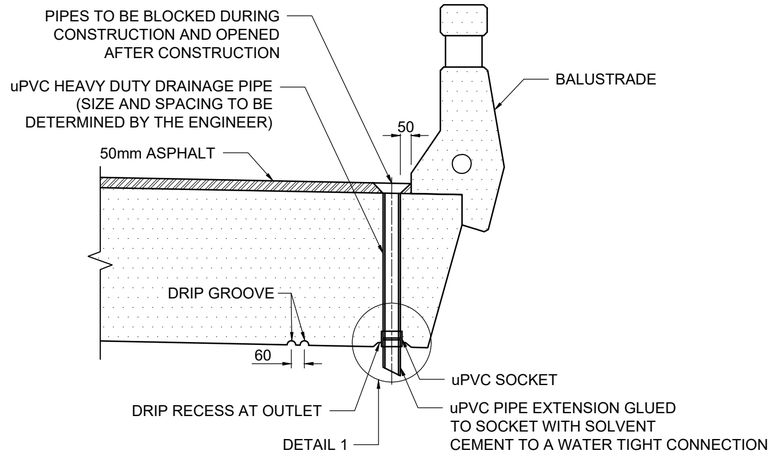

BRIDGE DECK DRAINAGE DETAILS WITHOUT SIDEWALK

NOTES:

1. THE BRIDGE DECK DRAINAGE SHALL BE DESIGNED IN ACCORDANCE WITH CLAUSE 11.9 OF THE "CODE OF PROCEDURE FOR THE PLANNING AND DESIGN OF HIGHWAY AND ROAD STRUCTURES IN SOUTH AFRICA".
2. THE POSITIONS AND DETAILS OF DRAINAGE PIPES SHALL BE AS INDICATED ON THE DETAILED DRAWINGS FOR EACH INDIVIDUAL BRIDGE.
3. THE DRAINAGE PIPES SHALL BE SO POSITIONED AS TO ENSURE THAT THE OUTLETS DISCHARGE CLEAR OF THE CARRIAGEWAYS OF THE LOWER ROADS OR TRANSNET FORMATIONS.
4. THE DIAMETER AND SPACING OF THE DRAINAGE PIPES TO BE LESS DETERMINED BY THE ENGINEER. NO DRAINAGE PIPE SHALL BE LESS THAN 75mmØ. FOR SCUPPER PIPES GREATER THAN 100mmØ A GRID INLET SHALL BE SPECIFIED. PREFERRED SIZE 75mmØ.
5. THE uPVC PIPING AND FITTINGS SPECIFIED SHALL BE HEAVY DUTY (SDP34) NON-PRESSURE SEWER AND DRAIN PIPES TO SANS 791. WALL THICKNESS SHALL NOT BE LESS THAN 4.7mm.
6. ALL PERMANENT CONNECTIONS SHALL BE WATERTIGHT SOLVENT CEMENT CONNECTIONS INSTALLED IN ACCORDANCE WITH THE MANUFACTURER'S RECOMMENDATIONS.
7. uPVC PIPE EXTENSION GLUED TO SOCKET WITH SOLVENT CEMENT TO A WATERTIGHT CONNECTION AFTER REMOVAL OF DECK SHUTTERS.
8. DRAINAGE PIPES TO BE BLOCKED DURING CONSTRUCTION AND OPENED AFTER CONSTRUCTION.

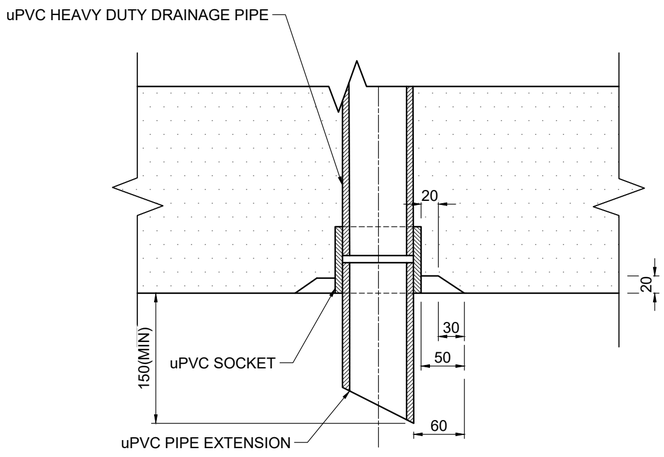

DETAIL 1

No.	DATE	ADDITIONS AND AMENDMENTS
0	OCT - 2023	ORIGINAL VERSION

STANDARD PLANS

WESTERN CAPE GOVERNMENT
DEPARTMENT OF INFRASTRUCTURE
TRANSPORT INFRASTRUCTURE BRANCH

BALUSTRADES AND BARRIERS

TYPICAL DECK DRAINAGE DETAILS

SCALE : N.T.S.

A2 ORIGINAL

INDEX NO.
WCS/60/2/D6

PLAN NO.
SHEET 6 OF 6

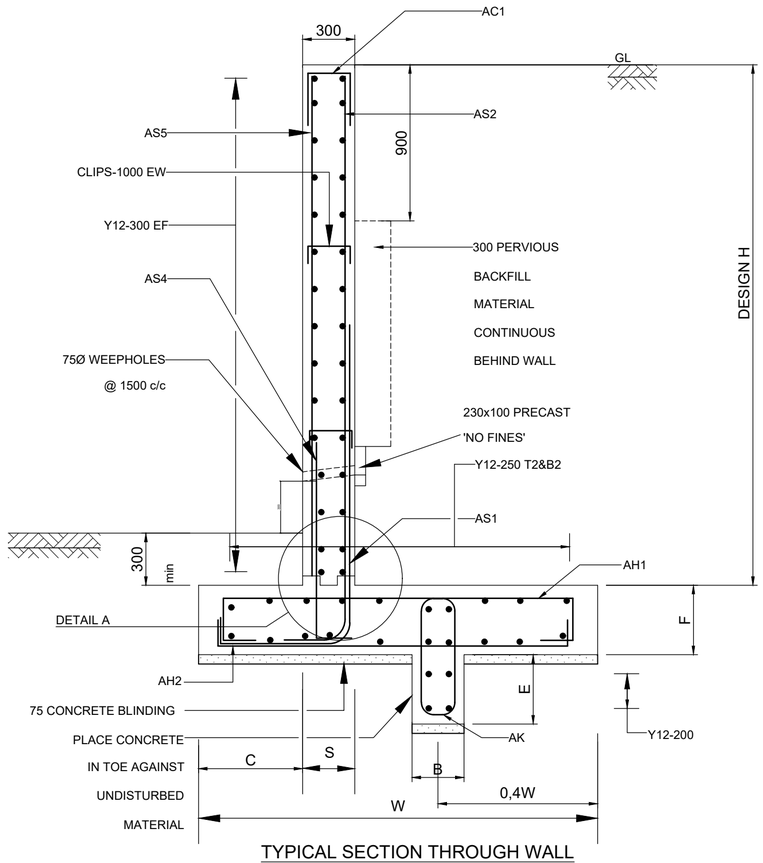

TYPICAL SECTION THROUGH WALL
(REAR WALL FACE VERTICAL)
(FOOTING ON SOIL)

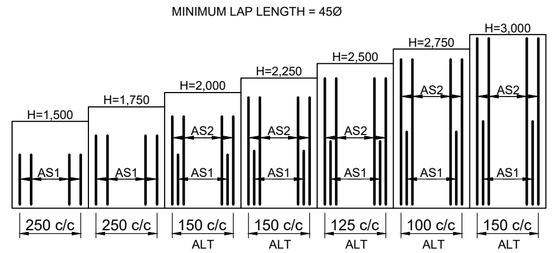

ELEVATION OF WALL TYPE 2 FOR VARIOUS HEIGHTS

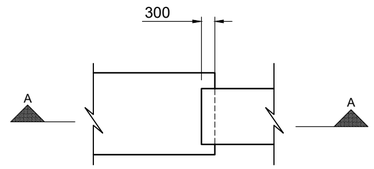

PLAN DETAIL OF
FOOTING STEP

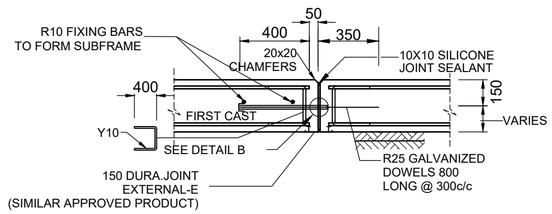

MOVEMENT JOINT

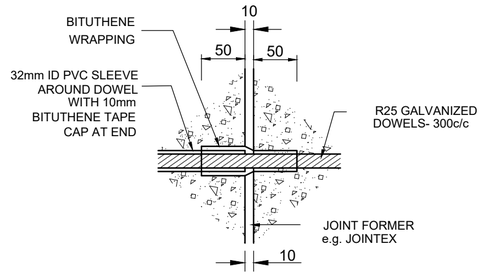

DETAIL B

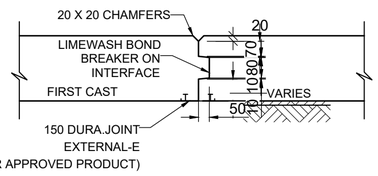

CONTRACTION JOINT
DETAILS OF WALL STEM VERTICAL JOINTS

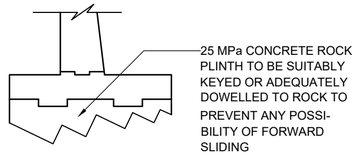

TYPICAL SECTION
(FOOTING ON ROCK)

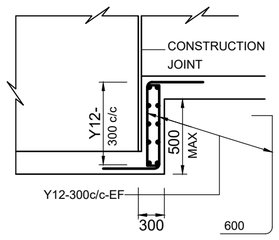

SECTION A - A

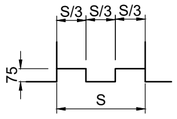

DETAIL A

FOOTING FOR WALL (SEE TYPICAL SECTION)								
H (m)	S (m)	W (m)	C (m)	F (m)	E (m)	B (m)	BEARING PRESS kPa	CONCRETE QUANTITIES m^3/m (excl. blind.)
1,50	300	1600	400	350	350	300	92	1,1
1,75	300	1750	450	350	400	300	94	1,3
2,00	300	1850	450	350	400	300	105	1,4
2,25	300	2000	550	400	450	350	112	1,6
2,50	300	2150	550	400	450	350	113	1,8
2,75	300	2200	600	400	450	350	131	1,9
3,00	300	2300	600	400	500	350	141	2,0

REINFORCEMENT SCHEDULE FOR WALL (SEE TYPICAL SECTION)

	BARS AS1							BARS AS2						BARS AH1						BARS AH2					STIRRUPS AK					BARS AS4			BARS AS5			BARS AC1		
H m	DIAM.	SPACING	A	B	R	TOTAL LENGTH	DIAM.	SPACING	A	B	R	TOTAL LENGTH	DIAM.	SPACING	A	B	C	TOTAL LENGTH	DIAM.	SPACING	A	B	TOTAL LENGTH	DIAM.	SPACING	A	B	TOTAL LENGTH	DIAM.	SPACING	A	LENGTH	DIAM.	SPACING	LENGTH	DIAM.	SPACING	LENGTH
1,50	Y12	250	1725	575	120	2400							Y12	250	200	200	1450	2130	Y12	250	200	1450	1800	Y12	200	550	150	1700	Y12	250	1000	1200	Y12	250	1350	Y10	250	750
1,75	Y12	250	1950	625	120	2700							Y12	250	200	200	1600	2280	Y12	250	200	1600	1950	Y12	200	600	150	1800	Y12	250	1000	1200	Y12	250	1600	Y10	250	750
2,00	Y12	300	1250	625	120	1950	Y12	300	310	2225	120	2500	Y16	300	200	200	1700	2380	Y12	300	200	1700	2050	Y12	200	600	150	1800	Y12	300	1000	1200	Y12	300	1850	Y10	300	750
2,25	Y12	300	1450	725	120	2250	Y12	300	260	2525	120	2750	Y16	300	200	250	1850	2630	Y12	300	250	1850	2300	Y12	200	700	200	2100	Y12	300	1100	1300	Y12	300	2100	Y10	300	750
2,50	Y12	250	1575	725	120	2400	Y12	250	260	2775	120	3000	Y16	250	200	250	2000	2780	Y12	250	250	2000	2450	Y12	200	700	200	2100	Y12	250	1100	1300	Y12	250	2350	Y10	250	750
2,75	Y12	200	1700	775	120	2550	Y12	200	260	3025	120	3250	Y16	200	200	250	2050	2830	Y12	200	250	2050	2500	Y12	200	700	200	2100	Y12	300	1100	1300	Y12	300	2600	Y10	300	750
3,00	Y16	300	2325	775	180	3200	Y16	300	260	3275	180	3500	Y20	300	200	250	2150	2930	Y16	300	250	2150	2600	Y12	200	750	200	2200	Y12	300	1100	1300	Y12	300	2850	Y10	300	750

NOTES :

1. WHERE POSSIBLE THE WALL SHALL BE LOCATED IN THE POSITION ON THE FOOTING AS INDICATED, AS THIS PROVIDES AN ECONOMICAL SOLUTION. WHERE IT IS NECESSARY TO PLACE THE WALL AT A DIFFERENT LOCATION (eg. AT EITHER THE HEEL OR TOE OF THE FOOTING) A SPECIAL DESIGN IS REQUIRED.
2. WHERE THE FOUNDATION MATERIAL CANNOT SAFELY WITHSTAND THE (SERVICABILITY LIMIT STATE) BEARING PRESSURES INDICATED, A SPECIAL DESIGN IS REQUIRED.
3. .FOOTINGS SHALL NOT BE CONSTRUCTED IN WET CLAY MATERIAL.
4. CONSTRUCTION MATERIALS
   CONCRETE: 30 MPa WITH A COARSE AGGREGATE NOMINAL SIZE OF 28mm
   MINIMUM CEMENTITIOUS CONTENT IN FOOTING: 300 kg/m³
   REINFORCING: SANS 920 TYPE C, CLASS 2 GRADE 1 (min. YIELD STRESS OF 450Mpa)
   RETAINED EARTH: COARSE GRAINED, WITH A LOW SILT OR CLAY CONTENT SUCH THAT THE MATERIAL ESSENTIALLY HAS THE PROPERTIES OF A "GRANULAR MATERIAL" (TYPE I MATERIAL AS PER TMH 7 PART 2, CLAUSE 2.4.2). ASSUMED DENSITY 2000 kg/m³
   NO FINES CONCRETE: AS PER SECTION 6602 OF THE COLTO DOCUMENT: "STANDARD SPECIFICATIONS FOR ROAD & BRIDGEWORKS FOR STATE ROAD AUTHORITIES"
   PERVIOUS BACKFILL BEHIND WALLS: AS PER SECTION 6606(d) OF THE COLTO DOCUMENT:"STANDARD SPECIFICATIONS FOR ROAD & BRIDGEWORKS FOR STATE ROAD AUTHORITIES"
5. CONCRETE COVER TO REINFORCEMENT: 75mm min. FOR FACES CAST DIRECTLY AGAINST THE GROUND
   50mm min. FOR OTHER FACES
6. DESIGN CRITERIA
   -THE LOADS AND LOAD FACTORS APPLICABLE TO THE "APPROXIMATE THEORY FOR EARTH PRESSURE" FOR "TYPE I" FILL AS GIVEN IN TMH 7 PART 2 HAVE BEEN USED
   -BOTH NA AND NB36 LOADS HAVE BEEN CONSIDERED
   -PASSIVE EARTH PRESSURE HAS BEEN USED IN ASSESSING SLIDING RESISTANCE. THE SOIL LEVEL HAS BEEN TAKEN TO CORRESPOND WITH THE TOP OF THE FOOTING.
   -IT HAS BEEN ASSUMED THAT THE RETAINED MATERIAL IS NOT SATURATED WITH WATER
   -THE WALLS HAVE BEEN DIMENSIONED TO ENSURE THAT THE ENTIRE INTERFACE BETWEEN THE FOOTING AND THE FOUNDING MATERIAL IS IN COMPRESSION IN THE ABSENCE OF TRANSIENT (NA AND NB36) LOADS AT THE SERVICABILITY LIMIT STATE.
7. JOINTS IN WALLS
   - CONTRACTION JOINTS AT max. 6m c/c.
   - MOVEMENT JOINTS AT max. 30m c/c.
8. ALL EXPOSED SHARP EDGES TO HAVE 20x20 CHAMFERS.
9. LEGEND
   T2 - BOTTOM LAYER OF TOP REINFORCEMENT
   B2 - TOP LAYER OF BOTTOM REINFORCEMENT
   EF - EACH FACE
   EW - EACH WAY
   HOR - HORIZONTAL

No.	DATE	ADDITIONS AND AMENDMENTS
0	OCT - 2023	ORIGINAL VERSION

STANDARD PLANS

WESTERN CAPE GOVERNMENT
DEPARTMENT OF INFRASTRUCTURE
TRANSPORT INFRASTRUCTURE BRANCH

STANDARD R.C. CANTILEVER RETAINING WALLS

WALL FOR BACKFILL HORIZONTAL (HEIGHT: 1.5m TO 3.0m)

SCALE : N.T.S.

A2 ORIGINAL

INDEX NO.
WCS/60/3/D1

PLAN NO.
SHEET 1 OF 2

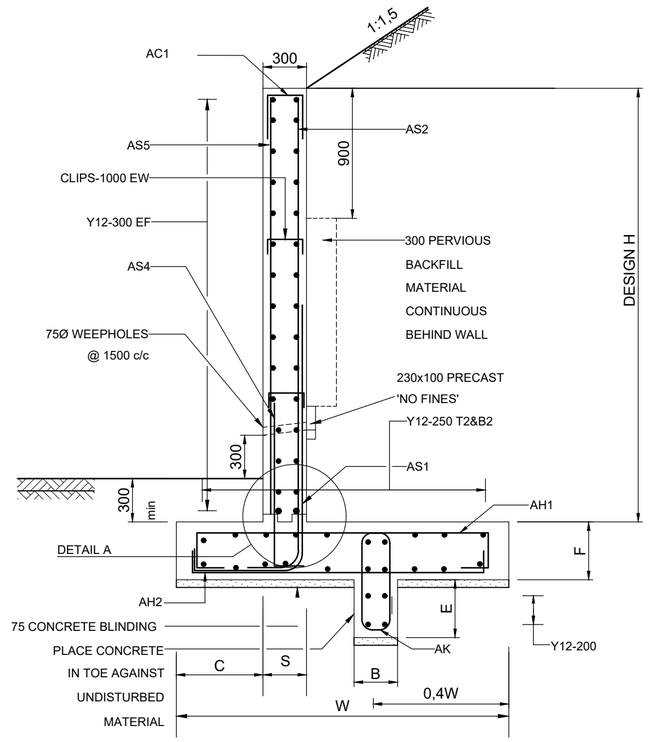

TYPICAL SECTION THROUGH WALL
(REAR WALL FACE VERTICAL)
(FOOTING ON SOIL)

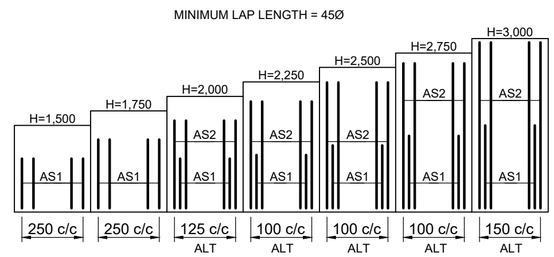

ELEVATION OF WALL FOR VARIOUS HEIGHTS

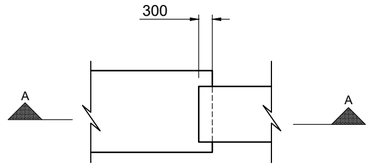

PLAN DETAIL OF
FOOTING STEP

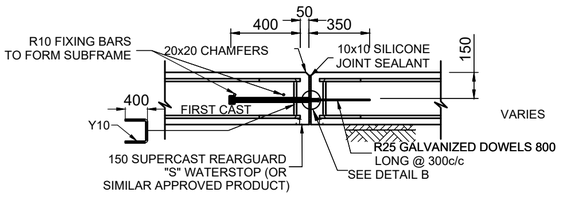

MOVEMENT JOINT

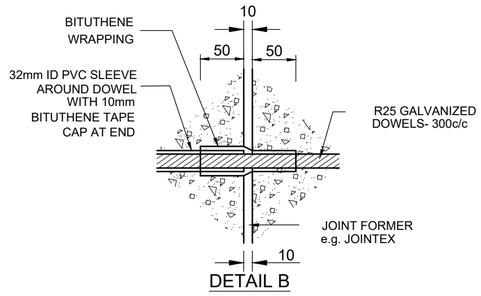

DETAIL B

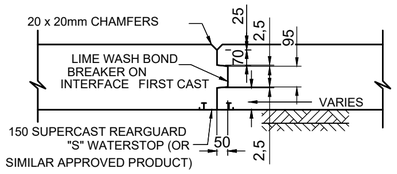

CONTRACTION JOINT
DETAILS OF WALL STEM VERTICAL JOINTS

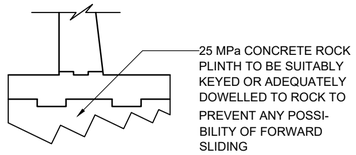

TYPICAL SECTION
(FOOTING ON ROCK)

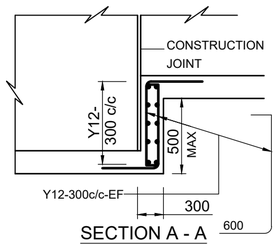

SECTION A - A

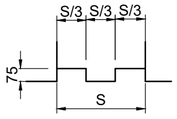

DETAIL A

NOTES :
1. WHERE POSSIBLE THE WALL SHALL BE LOCATED IN THE POSITION ON THE FOOTING AS INDICATED, AS THIS PROVIDES AN ECONOMICAL SOLUTION. WHERE IT IS NECESSARY TO PLACE THE WALL AT A DIFFERENT LOCATION (eg. AT EITHER THE HEEL OR TOE OF THE FOOTING) A SPECIAL DESIGN IS REQUIRED.
2. WHERE THE FOUNDATION MATERIAL CANNOT SAFELY WITHSTAND THE (SERVICABILITY LIMIT STATE) BEARING PRESSURES INDICATED, A SPECIAL DESIGN IS REQUIRED.
3. FOOTINGS SHALL NOT BE CONSTRUCTED IN WET CLAY MATERIAL.
4. CONSTRUCTION MATERIALS
   CONCRETE: 25 MPa WITH A COARSE AGGREGATE NOMINAL SIZE OF 28mm MINIMUM CEMENTITIOUS CONTENT IN FOOTING: 300 kg/m^3
   REINFORCING: SANS 920 TYPE C, CLASS 2 GRADE 1 (min. YIELD STRESS OF 450Mpa)
   RETAINED EARTH: COARSE GRAINED, WITH A LOW SILT OR CLAY CONTENT SUCH THAT THE MATERIAL ESSENTIALLY HAS THE PROPERTIES OF A "GRANULAR MATERIAL" (TYPE I MATERIAL AS PER TMH 7 PART 2, CLAUSE 2.4.2). ASSUMED DENSITY 2000 kg/m3
   NO FINES CONCRETE: AS PER SECTION 6602 OF THE COLTO DOCUMENT: "STANDARD SPECIFICATIONS FOR ROAD & BRIDGEWORKS FOR STATE ROAD AUTHORITIES"
   PERVIOUS BACKFILL BEHIND WALLS: AS PER SECTION 6606(d) OF THE COLTO DOCUMENT:"STANDARD SPECIFICATIONS FOR ROAD & BRIDGEWORKS FOR STATE ROAD AUTHORITIES"
5. CONCRETE COVER TO REINFORCEMENT: 75mm min. FOR FACES CAST DIRECTLY AGAINST THE GROUND
   50mm min. FOR OTHER FACES
6. DESIGN CRITERIA
   -THE LOADS AND LOAD FACTORS APPLICABLE TO THE "APPROXIMATE THEORY FOR EARTH PRESSURE" FOR "TYPE I" FILL AS GIVEN IN TMH 7 PART 2 HAVE BEEN USED
   -BOTH NA AND NB36 LOADS HAVE BEEN CONSIDERED
   -PASSIVE EARTH PRESSURE HAS BEEN USED IN ASSESSING SLIDING RESISTANCE. THE SOIL LEVEL HAS BEEN TAKEN TO CORRESPOND WITH THE TOP OF THE FOOTING.
   -IT HAS BEEN ASSUMED THAT THE RETAINED MATERIAL IS NOT SATURATED WITH WATER
   -THE WALLS HAVE BEEN DIMENSIONED TO ENSURE THAT THE ENTIRE INTERFACE BETWEEN THE FOOTING AND THE FOUNDING MATERIAL IS IN COMPRESSION IN THE ABSENCE OF TRANSIENT (NA AND NB36) LOADS AT THE SERVICABILITY LIMIT STATE.
7. JOINTS IN WALLS
   - CONTRACTION JOINTS AT max. 6m c/c.
   - MOVEMENT JOINTS AT max. 30m c/c.
8. ALL EXPOSED SHARP EDGES TO HAVE 20x20 CHAMFERS.
9. LEGEND
   T2 - BOTTOM LAYER OF TOP REINFORCEMENT
   B2 - TOP LAYER OF BOTTOM REINFORCEMENT
   EF - EACH FACE
   EW - EACH WAY
   HOR - HORIZONTAL

REINFORCEMENT SCHEDULE FOR TYPE 2 WALL (SEE TYPICAL SECTION)

H m	BARS AS1 DIAM.	SPACING	A	B	R	TOTAL LENGTH	BARS AS2 DIAM.	SPACING	A	B	R	TOTAL LENGTH	BARS AH1 DIAM.	SPACING	A	B	C	TOTAL LENGTH	BARS AH2 DIAM.	SPACING	A	B	TOTAL LENGTH	STIRRUPS AK DIAM.	SPACING	A	B	TOTAL LENGTH	BARS AS4 DIAM.	SPACING	A	LENGTH	BARS AS5 DIAM.	SPACING	LENGTH	BARS AC1 DIAM.	SPACING	LENGTH
1,50	Y12	250	1725	525	120	2350							Y12	250	200	200	1050	1750	Y12	250	200	1050	1400	Y12	200	500	150	1600	Y12	250	1000	1200	Y12	250	1350	Y10	250	750
1,75	Y12	250	1975	575	120	2650							Y12	250	200	200	1250	1950	Y12	250	200	1250	1600	Y12	200	500	150	1600	Y12	250	1000	1200	Y12	250	1600	Y10	250	750
2,00	Y12	250	1300	575	120	1950	Y12	250	310	2225	120	2500	Y12	250	200	200	1450	2150	Y12	250	200	1450	1800	Y12	200	500	150	1600	Y12	250	1000	1200	Y12	250	1850	Y10	250	750
2,25	Y12	200	1450	575	120	2100	Y12	200	260	2525	120	2750	Y12	200	200	250	1650	2450	Y12	200	250	1650	2100	Y12	200	550	150	1700	Y12	200	1100	1300	Y12	200	2100	Y10	200	750
2,50	Y12	200	1725	700	120	2500	Y12	200	260	2775	120	2900	Y12	200	200	250	1850	2600	Y12	200	250	1850	2300	Y12	200	550	150	1700	Y12	200	1100	1300	Y12	200	2350	Y10	200	750
2,75	Y12	200	1825	775	120	2700	Y12	200	260	3025	120	3150	Y12	200	200	250	2050	2800	Y12	200	250	2050	2500	Y12	200	550	150	1700	Y12	200	1100	1300	Y12	200	2600	Y10	200	750
3,00	Y16	300	1930	775	180	2800	Y16	300	260	3275	180	3400	Y16	300	200	250	2150	2900	Y16	300	250	2150	2600	Y12	200	550	150	1700	Y16	300	1100	1300	Y16	300	2850	Y10	200	750

H (m)	S (m)	FOOTING FOR WALL (SEE TYPICAL SECTION) W (m)	C (m)	F (m)	E (m)	B (m)	kPa	m^3/m (excl. blind.)
1,50	300	1200	350	350	300	300	79	1,0
1,75	300	1400	400	350	300	300	88	1,1
2,00	300	1600	400	350	300	300	102	1,3
2,25	300	1800	500	400	300	300	112	1,5
2,50	300	2000	500	400	300	300	126	1,6
2,75	300	2200	600	400	300	300	129	1,8
3,00	300	2300	600	400	300	300	149	1,9

No.	DATE	ADDITIONS AND AMENDMENTS
0	OCT - 2023	ORIGINAL VERSION

STANDARD PLANS

WESTERN CAPE GOVERNMENT
DEPARTMENT OF INFRASTRUCTURE
TRANSPORT INFRASTRUCTURE BRANCH

STANDARD R.C. CANTILEVER RETAINING WALLS

WALLS FOR BACKFILL AT A 1:1,5 SLOPE (HEIGHT: 1.5m TO 3.0m)

SCALE : N.T.S.

A2 ORIGINAL

INDEX NO.
WCS/60/3/D2

PLAN NO.
SHEET 2 OF 2

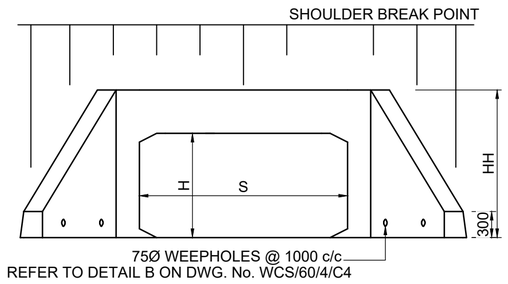

ELEVATION SINGLE CULVERT

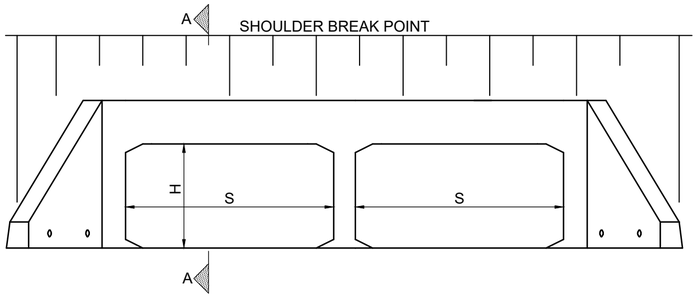

ELEVATION DOUBLE CULVERT

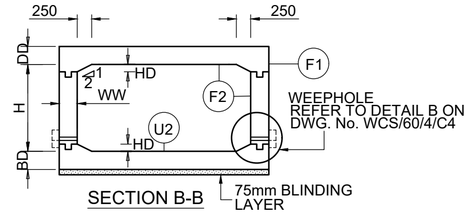

SECTION B-B

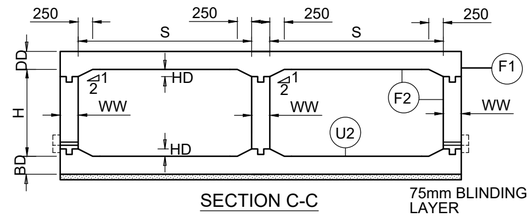

SECTION C-C

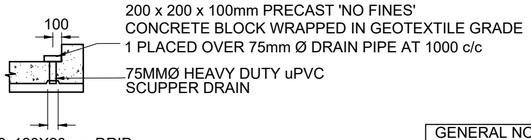

DETAIL B
SCUPPER DRAIN

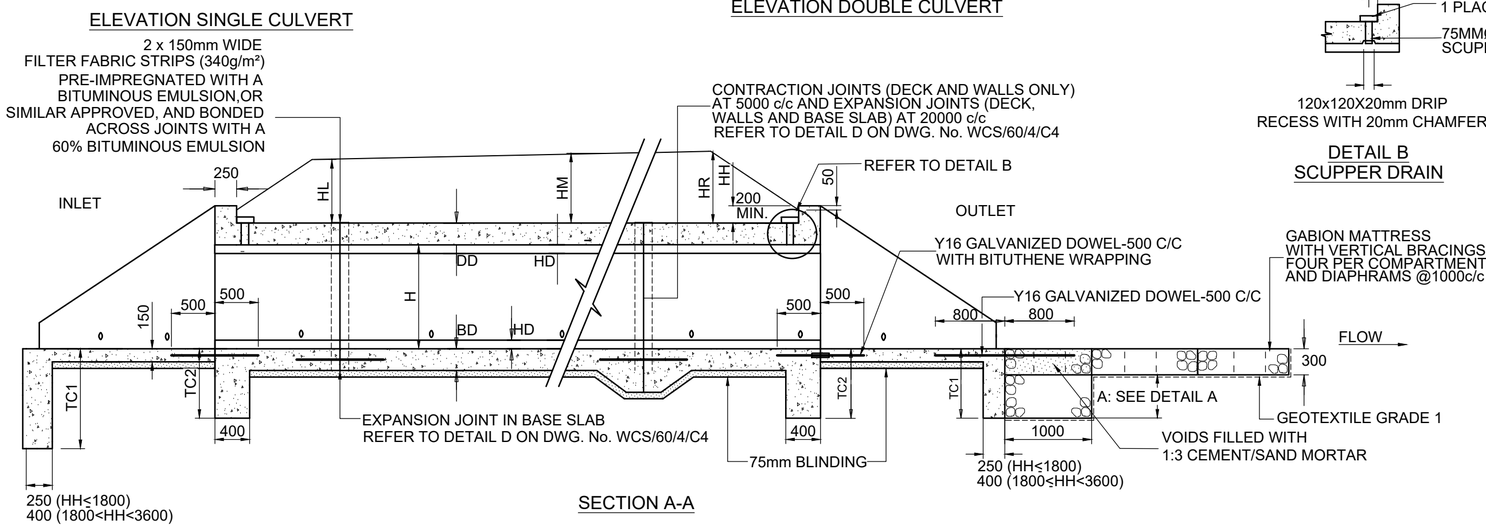

SECTION A-A

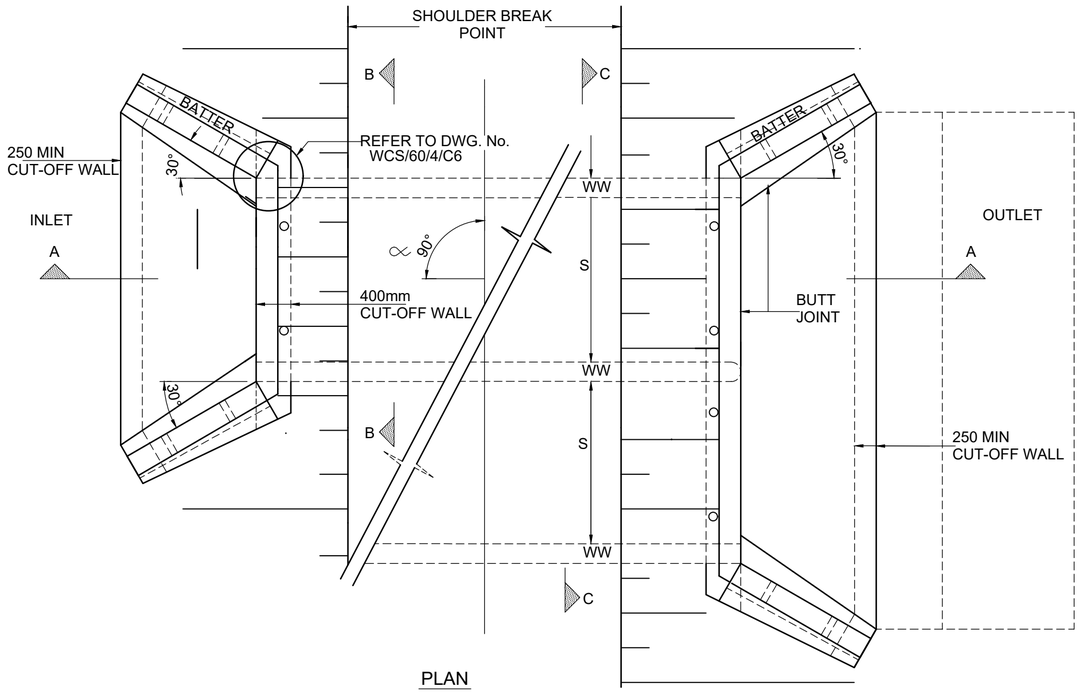

PLAN

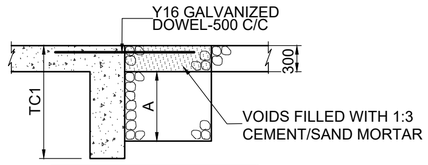

TC1	PROTECTION DEPTH(A)
<800	0
800-1300	500
> 1300	1000

DETAIL A
GABION PROTECTION DEPTH

NOTATION :

H	: CLEAR INTERNAL HEIGHT OF PORTA
S	: CLEAR INTERNAL SPAN OF PORTAL
HH	: HEADWALL HEIGHT
DD	: DECK SLAB THICKNESS
BD	: BASE SLAB THICKNESS
TC1, TC2	: CUT-OFF WALL DEPTHS
HD	: HAUNCH DEPTH
WW	: WALL WIDTH
HL	: FILL HEIGHT LEFT
HM	: FILL HEIGHT MIDDLE
HR	: FILL HEIGHT RIGHT

GENERAL NOTES :

1. THE CULVERTS ARE DESIGNED ACCORDING TO TMH7 PARTS 1-3 CODE OF PRACTICE FOR THE DESIGN OF HIGHWAY BRIDGES AND CULVERTS IN SOUTH AFRICA, AS AMENDED IN 1988.
2. THIS DRAWING TO BE READ TOGETHER WITH STANDARD DRAWINGS WCS/60/4/C3 - C7.
3. CULVERTS OUTSIDE THE SPECIFIED RANGE OF SIZES, CONDITIONS AND LOADING, SHALL BE CONSIDERED AS A SPECIAL DESIGN AND ARE NOT COVERED UNDER THIS STANDARD DRAWING.
4. REFER TO DWG. No. WCS/60/4/C6 FOR DIMENSIONS AND SETTING OUT OF WINGWALLS.
5. EROSION PROTECTION AS REQUIRED, REFER TO DWG. No. WCS/22/6/D1.

DESIGN LOADING AND CONDITIONS ON CULVERTS :

1. PRIMARY TRAFFIC LOADING ON CULVERTS (TMH7 PART 2 - 2.6.6):
   (1) NA LOADING
   (2) NB 36 LOADING
   (3) NC LOADING
2. VERTICAL EARTH LOADING ON CULVERTS (TMH7 PART 2 - 2.3.3):
   (1) FILL HEIGHT VARIES FROM 0 TO 6 METERS ABOVE TOP OF CULVERT
3. HORIZONTAL EARTH PRESSURE ON CULVERTS (TMH7 PART 2 - 2.4):
   (1) SOIL TYPE I - 5.6 kN/m² PER METER DEPTH
   (2) SOIL TYPE II - 7.8 kN/m² PER METER DEPTH
   (3) SURCHARGE PRESSURE OF NA, NB36 AND NC HIGHWAY TRAFFIC LOADING
   (4) NO ALLOWANCE WAS MADE FOR HORIZONTAL WATER PRESSURE BEHIND THE WALLS AND SHOULD BE RELIEVED BY MEANS OF A PROPER DRAINAGE SYSTEM AND WEEPHOLES.
4. MATERIAL DENSITIES :
   (1) SOIL = 2000 kg/m³
   (2) CONCRETE = 2600 kg/m³
5. FOUNDING CONDITIONS:
   (1) CULVERTS WERE DESIGNED BOTH FOR YIELDING AND UNYIELDING FOUNDATION CONDITIONS.
   (2) THE MAXIMUM DESIGN EARTH PRESSURES UNDER THE FOOTING WERE ACCORDING TO THE TABLES AND SHALL NOT EXCEED THE SAFE BEARING CAPACITY OF THE FOUNDING MATERIAL.

MATERIAL SPECIFICATION :

1. CONCRETE	CLASS	CHARACTERISTIC STRENGTH (MPA)	MIN CEMENTITIOUS CONTENTS
(1) BLINDING LAYER	15/20	15	
(2) SLABS AND WALLS	30/20	30	300 kg/m³

2. REINFORCEMENT TYPE	YIELD STRENGTH (MPA)	MIN RADIUS
(1) MILD STEEL BARS (R)	250	2 x DIAM
(2) HIGH TENSILE STEEL BARS (Y)	450	3 x DIAM

DESIGN NOTES :

1. DETERMINE NOMINAL CULVERT SIZE (H+S) TO SUIT HYDRAULIC OR OTHER CONDITION.
2. DETERMINE MAXIMUM OF HL, HM AND HR.
3. FROM TABULATION ON DWG. No. WCS/60/4/C5 DETERMINE CONCRETE DIMENSIONS AND REINFORCING DETAILS.
4. FOR TC1 AND TC2 REFER TO DWG. No. WCS/60/4/C7.

CONSTRUCTION :

1. ALL EXPOSED SHARP EDGES TO HAVE 20 x 20mm CHAMFERS.
2. CONCRETE COVER TO REINFORCING: 50mm FOR ALL STRUCTURAL ELEMENTS.
3. CONCRETE FINISH: UNFORMED SURFACES - U2 (BROOMED TRANSVERSE)
   FORMED SURFACES (EXPOSED) - F2
   FORMED SURFACES (BURIED) - F1

THIS DRAWING TO BE READ IN CONJUNCTION WITH SECTION 2200 OF THE COLTO DOCUMENT "STANDARD SPECIFICATIONS FOR ROAD AND BRIDGE WORKS FOR STATE ROAD AUTHORITIES".

No.	DATE	ADDITIONS AND AMENDMENTS
0	OCT - 2023	ORIGINAL VERSION

STANDARD PLANS

WESTERN CAPE GOVERNMENT
DEPARTMENT OF INFRASTRUCTURE
TRANSPORT INFRASTRUCTURE BRANCH

INSITU CAST CONCRETE RECTANGULAR PORTAL CULVERTS

GENERAL DETAILS OF CULVERTS AT 90°

SCALE : N.T.S.

A2 ORIGINAL

INDEX NO. WCS/60/4/C1

PLAN NO. SHEET 1 OF 7

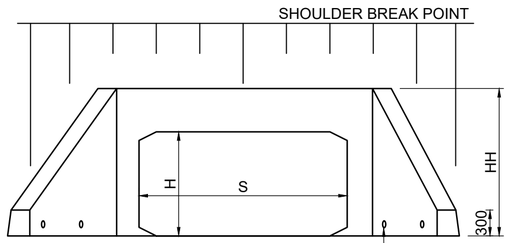

ELEVATION SINGLE CULVERT

75Ø WEEPHOLES @ 1000 c/c REFER TO WEEPHOLE DETAIL ON No. WCS/60/4/C4

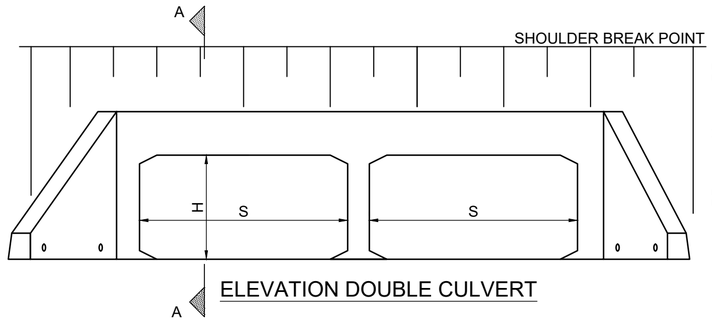

ELEVATION DOUBLE CULVERT

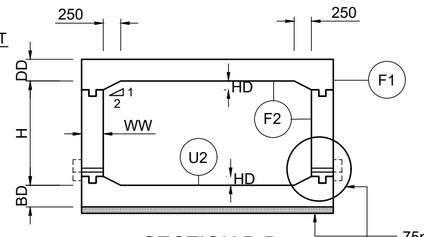

SECTION B-B

75mm BLINDING LAYER

REFER TO WEEPHOLE DETAIL ON No. WCS/60/4/C4

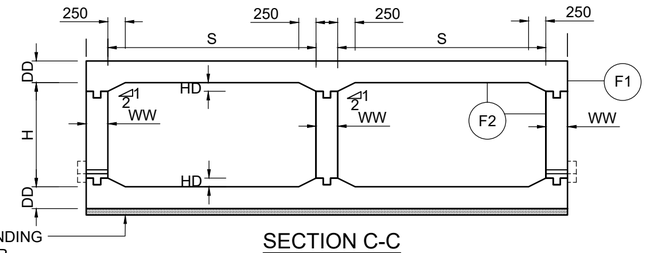

SECTION C-C

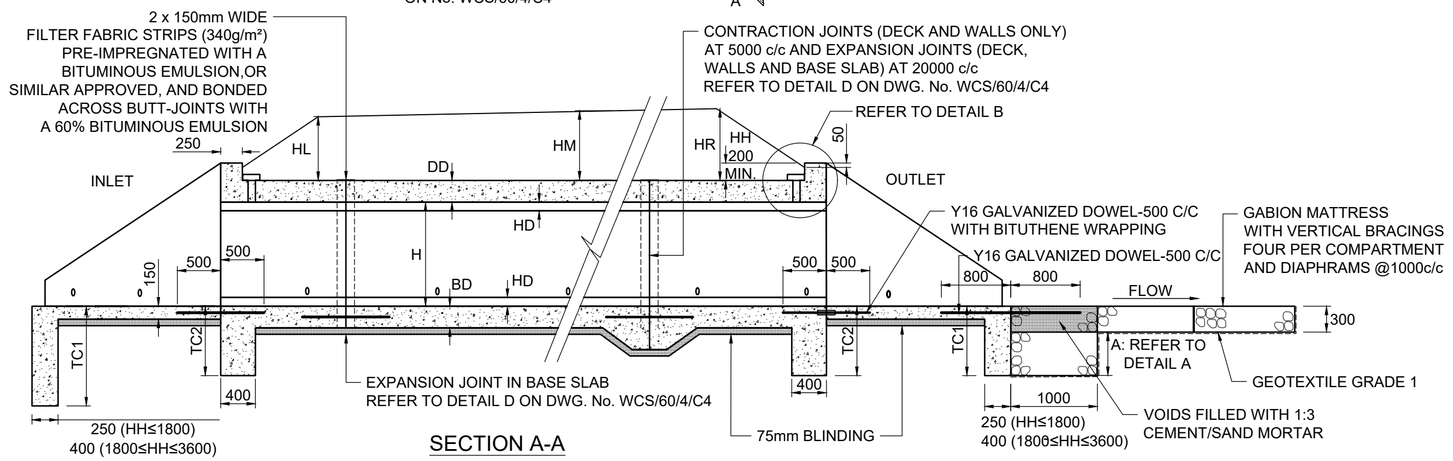

SECTION A-A

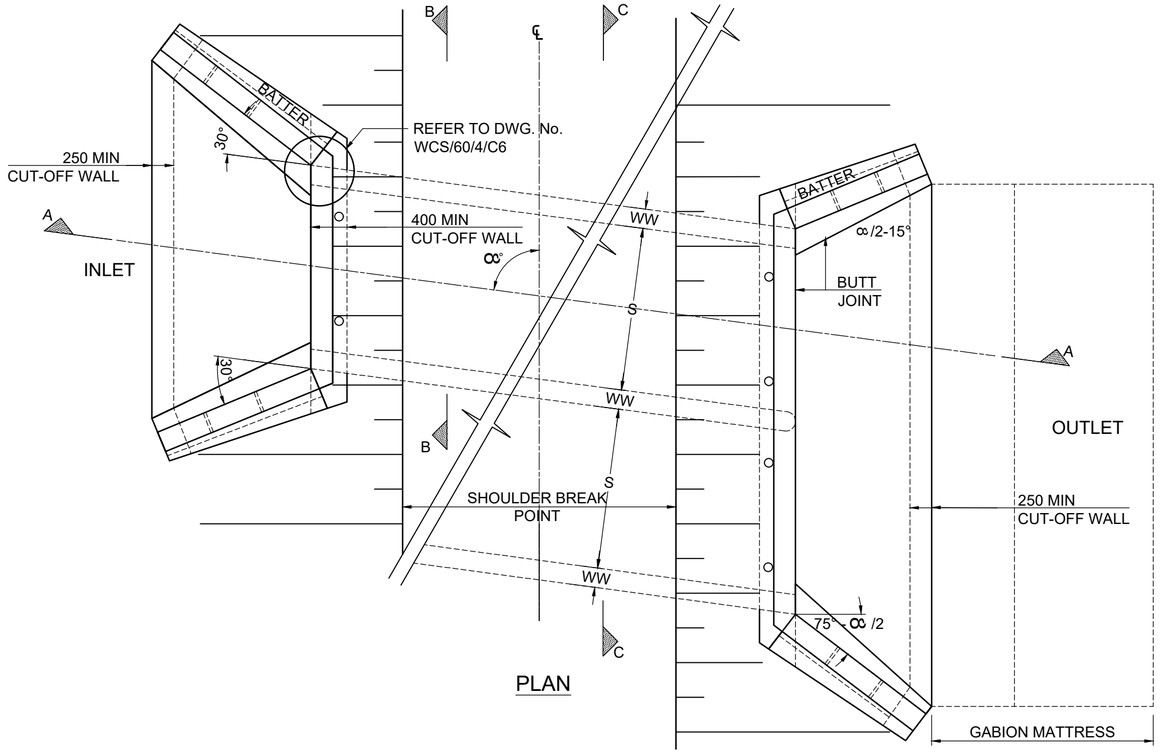

PLAN

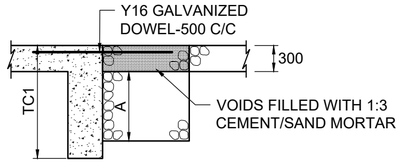

TC1	PROTECTION DEPTH(A)
<800	0
800-1300	500
> 1300	1000

DETAIL A
GABION PROTECTION DEPTH

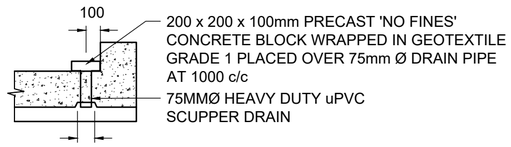

120x120X20mm DRIP RECESS WITH 20mm CHAMFER

DETAIL B
SCUPPER DRAIN

NOTATION :

H	: CLEAR INTERNAL HEIGHT OF PORTAL
S	: CLEAR INTERNAL SPAN OF PORTAL
HH	: HEADWALL HEIGHT
DD	: DECK SLAB THICKNESS
BD	: BASE SLAB THICKNESS
TC1, TC2	: CUT-OFF WALL DEPTHS
HD	: HAUNCH DEPTH
WW	: WALL WIDTH
HL	: FILL HEIGHT LEFT
HM	: FILL HEIGHT MIDDLE
HR	: FILL HEIGHT RIGHT

GENERAL NOTES :

1. THE CULVERTS ARE DESIGNED ACCORDING TO TMH7 PARTS 1-3 CODE OF PRACTICE FOR THE DESIGN OF HIGHWAY BRIDGES AND CULVERTS IN SOUTH AFRICA, AS AMENDED IN 1988.
2. THIS DRAWING TO BE READ TOGETHER WITH STANDARD DRAWINGS WCS/60/4/C3 - C7.
3. CULVERTS OUTSIDE THE SPECIFIED RANGE OF SIZES, CONDITIONS AND LOADING, SHALL BE CONSIDERED AS A SPECIAL DESIGN AND ARE NOT COVERED UNDER THIS STANDARD DRAWING.
4. REFER TO DWG. No. WCS/60/4/C6 FOR DIMENSIONS AND SETTING OUT OF WINGWALLS.
5. EROSION PROTECTION AS REQUIRED, REFER TO DWG. No. WCS/22/6/D1.

DESIGN LOADING AND CONDITIONS ON CULVERTS :

1. PRIMARY TRAFFIC LOADING ON CULVERTS (TMH7 PART 2 - 2.6.6):
   (1) NA LOADING
   (2) NB 36 LOADING
   (3) NC LOADING
2. VERTICAL EARTH LOADING ON CULVERTS (TMH7 PART 2 - 2.3.3):
   (1) FILL HEIGHT VARIES FROM 0 TO 6 METERS ABOVE TOP OF CULVERT
3. HORIZONTAL EARTH PRESSURE ON CULVERTS (TMH7 PART 2 - 2.4):
   (1) SOIL TYPE I - 5.6 kN/m² PER METER DEPTH
   (2) SOIL TYPE II - 7.8 kN/m² PER METER DEPTH
   (3) SURCHARGE PRESSURE OF NA, NB36 AND NC HIGHWAY TRAFFIC LOADING
   (4) NO ALLOWANCE WAS MADE FOR HORIZONTAL WATER PRESSURE BEHIND THE WALLS AND SHOULD BE RELIEVED BY MEANS OF A PROPER DRAINAGE SYSTEM AND WEEPHOLES.
4. MATERIAL DENSITIES :
   (1) SOIL = 2000 kg/m³
   (2) CONCRETE = 2600 kg/m³
5. FOUNDING CONDITIONS:
   (1) CULVERTS WERE DESIGNED BOTH FOR YIELDING AND UNYIELDING FOUNDATION CONDITIONS.
   (2) THE MAXIMUM DESIGN EARTH PRESSURES UNDER THE FOOTING WERE ACCORDING TO THE TABLES AND SHALL NOT EXCEED THE SAFE BEARING CAPACITY OF THE FOUNDING MATERIAL.

MATERIAL SPECIFICATION :

1. CONCRETE CLASS CHARACTERISTIC MIN CEMENTITIOUS STRENGTH (MPA) CONTENTS
   (1) BLINDING LAYER 15/20 15
   (2) SLABS AND WALLS 30/20 30 300 kg/m
2. REINFORCEMENT YIELD TYPE STRENGTH (MPA) MIN RADIUS
   (1) MILD STEEL BARS (R) 250 2 x DIAM
   (2) HIGH TENSILE STEEL BARS (Y) 450 3 x DIAM

DESIGN NOTES :

1. DETERMINE NOMINAL CULVERT SIZE (H+S) TO SUIT HYDRAULIC OR OTHER CONDITION.
2. DETERMINE MAXIMUM OF HL, HM AND HR.
3. FROM TABULATION ON DWG. No. WCS/60/4/C5 DETERMINE CONCRETE DIMENSIONS AND REINFORCING DETAILS.
4. FOR TC1 AND TC2 REFER TO DWG. No. WCS/60/4/C7.

CONSTRUCTION :

1. ALL EXPOSED SHARP EDGES TO HAVE 20 x 20mm CHAMFERS.
2. CONCRETE COVER TO REINFORCING: 50mm FOR ALL STRUCTURAL ELEMENTS.
3. CONCRETE FINISH: UNFORMED SURFACES - U2 (BROOMED TRANSVERSE)
   FORMED SURFACES (EXPOSED) - F2
   FORMED SURFACES (BURIED) - F1

THIS DRAWING TO BE READ IN CONJUNCTION WITH SECTION 2200 OF THE COLTO DOCUMENT "STANDARD SPECIFICATIONS FOR ROAD AND BRIDGE WORKS FOR STATE ROAD AUTHORITIES".

No.	DATE	ADDITIONS AND AMENDMENTS
0	OCT - 2023	ORIGINAL VERSION

STANDARD PLANS

WESTERN CAPE GOVERNMENT
DEPARTMENT OF INFRASTRUCTURE
TRANSPORT INFRASTRUCTURE BRANCH

INSITU CAST CONCRETE RECTANGULAR PORTAL CULVERTS

GENERAL DETAILS OF SKEW CULVERTS

SCALE : N.T.S.

A2 ORIGINAL

INDEX NO. WCS/60/4/C2

PLAN NO. SHEET 2 OF 7

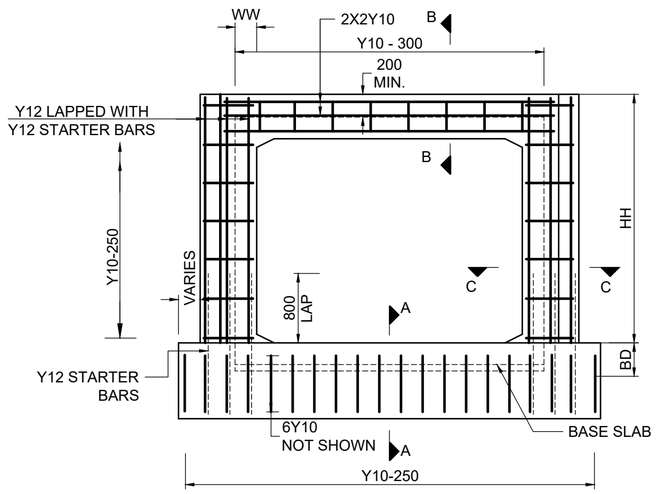

HEADWALL AND CUT-OFF WALL DETAIL

NOTE :
SEE SECTION C-C FOR STEEL DETAIL AT JOINT BETWEEN HEADWALL AND WINGWALL

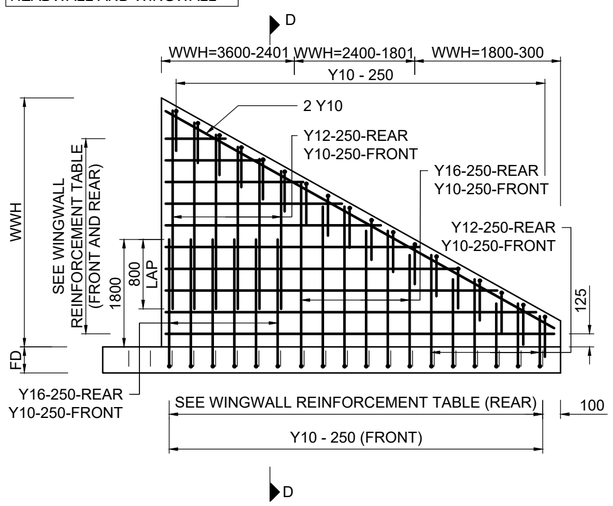

ELEVATION

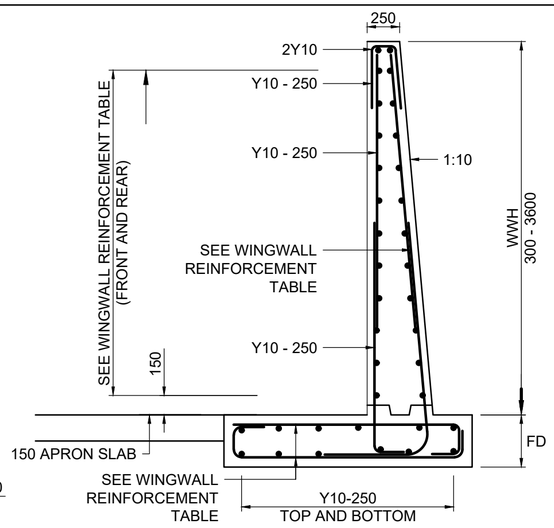

SECTION D-D

WINGWALL REINFORCEMENT				
WWH	TRANSVERSE STEEL	VERTICAL REAR WALL STEEL	FOOTING TOP STEEL	FOOTING BOTTOM STEEL
300 - 1800	Y12 - 200	Y12 - 250	Y12 - 250	Y16 - 250
1800 - 2400	Y12 - 200	Y16 - 250	Y12 - 250	Y16 - 250
2400 - 3600	Y12-200 TOP 2/3 of WWH Y12-100 BOTTOM 1/3 of WWH	Y16 - 250 STARTER BARS LAPPED WITH Y12 - 250	Y12 - 250	Y16 - 250

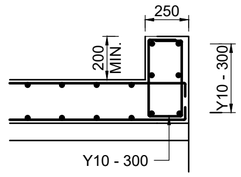

SECTION B-B

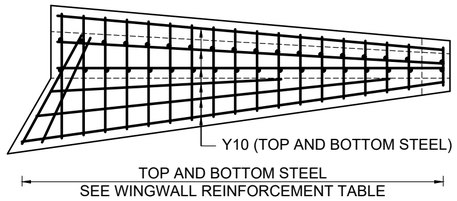

WINGWALL FOUNDATION PLAN

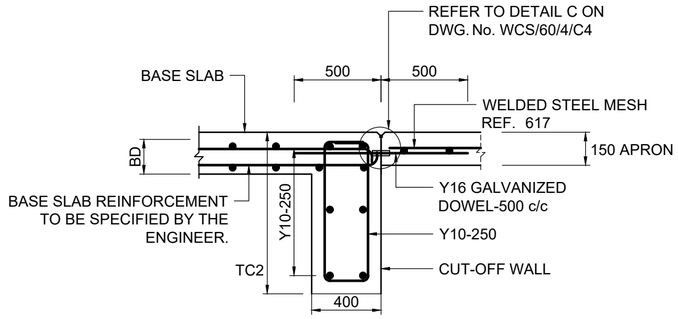

BASE SLAB, CUT-OFF WALL AND APRON SLAB DETAIL
SECTION A-A

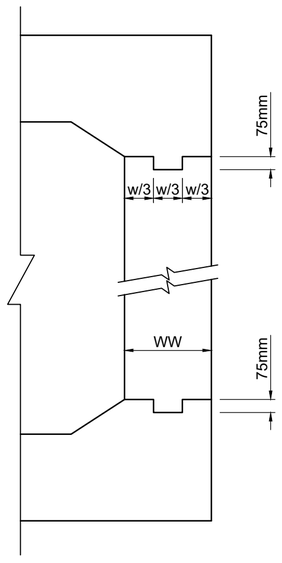

CONSTRUCTION JOINT DETAIL

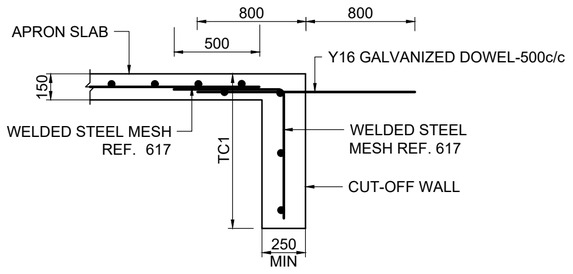

APRON SLAB AND CUT-OFF WALL DETAIL
(HH≤1800)

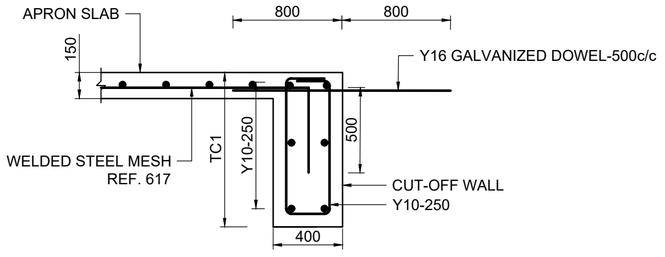

APRON SLAB AND CUT-OFF WALL DETAIL
(1800≤HH≤3600)

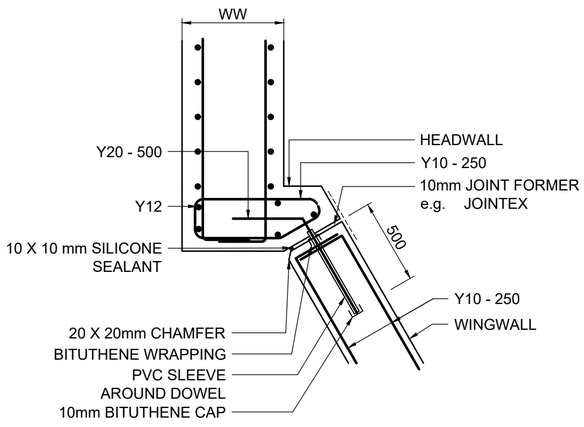

BUTT JOINT
BETWEEN HEADWALL AND WINGWALL
SECTION C-C

No.	DATE	ADDITIONS AND AMENDMENTS
0	OCT - 2023	ORIGINAL VERSION

STANDARD PLANS

WESTERN CAPE GOVERNMENT
DEPARTMENT OF INFRASTRUCTURE
TRANSPORT INFRASTRUCTURE BRANCH

INSITU CAST CONCRETE RECTANGULAR PORTAL CULVERTS

REINFORCEMENT FOR WINGWALLS AND HEADWALLS
HEIGHTS (HH) NOT EXCEEDING 3,6m

SCALE : N.T.S.

A2 ORIGINAL

INDEX NO.
WCS/60/4/C3

PLAN NO.
SHEET 3 OF 7

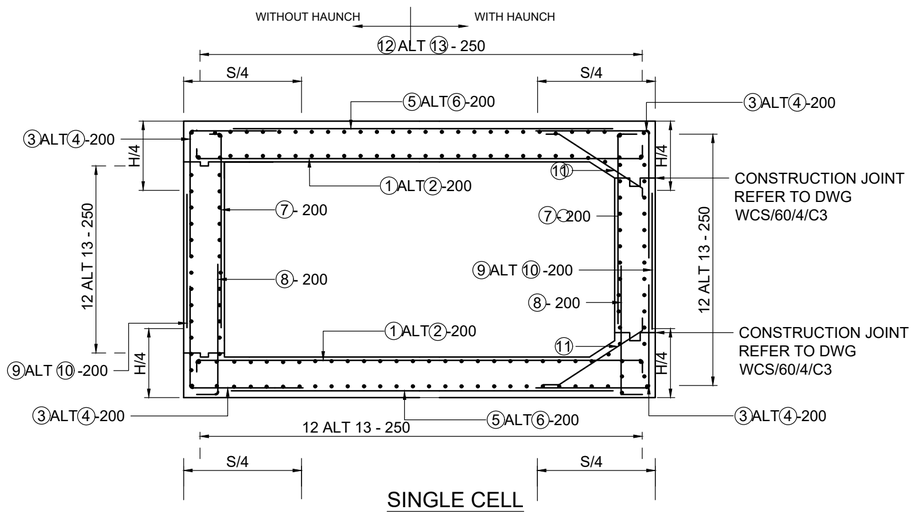

SINGLE CELL

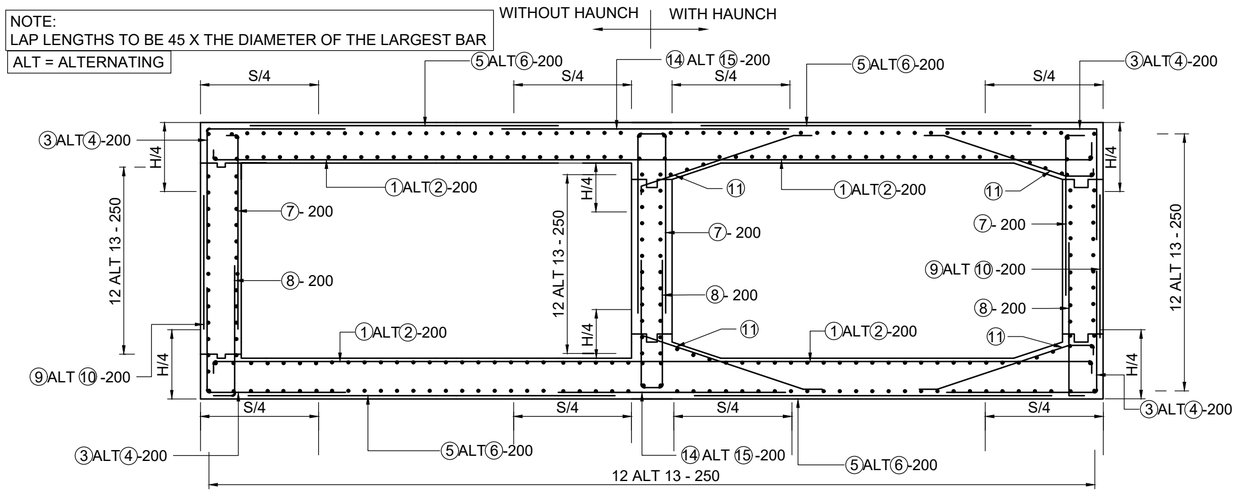

DOUBLE CELL

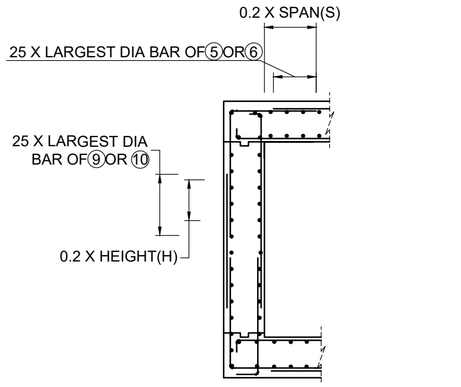

TYPICAL REINFORCEMENT CURTAILMENT

NOTE:
FOR LENGTHS BETWEEN EXPANSION JOINTS >5m DOUBLE TRANSVERSE STEEL IN H/4 AND S/4 SECTIONS AS SHOWN

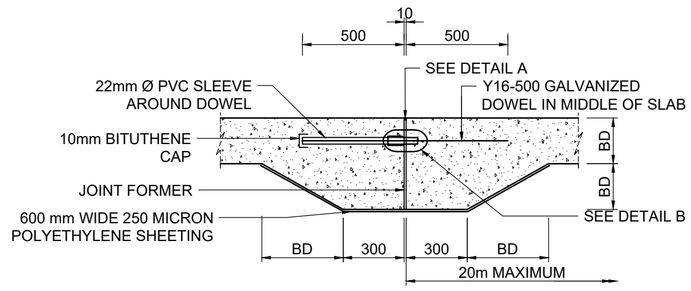

EXPANSION JOINT IN BASE SLAB

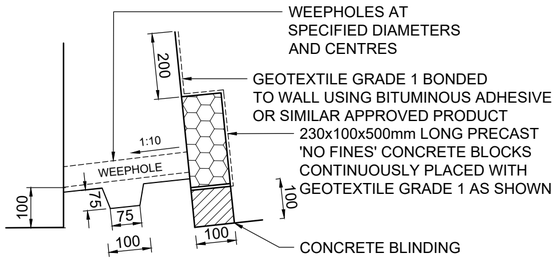

WEEPHOLE DETAIL

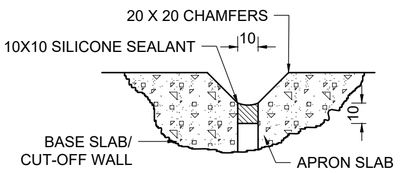

DETAIL A

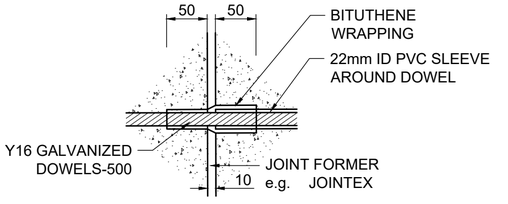

DETAIL B

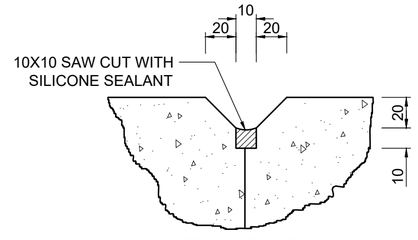

BUTT JOINT DETAIL

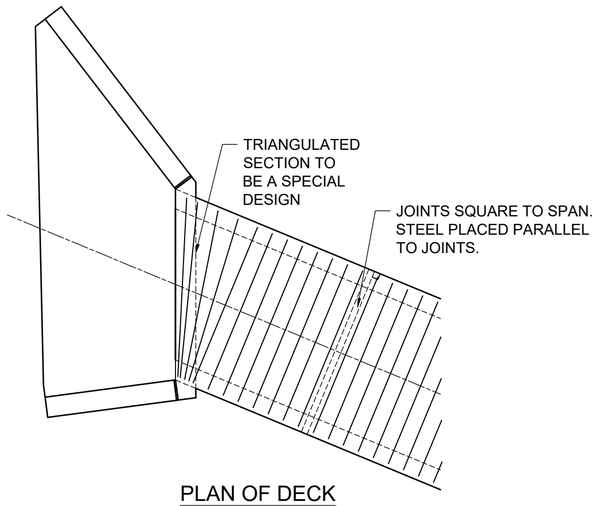

PLAN OF DECK
75° TO 60°

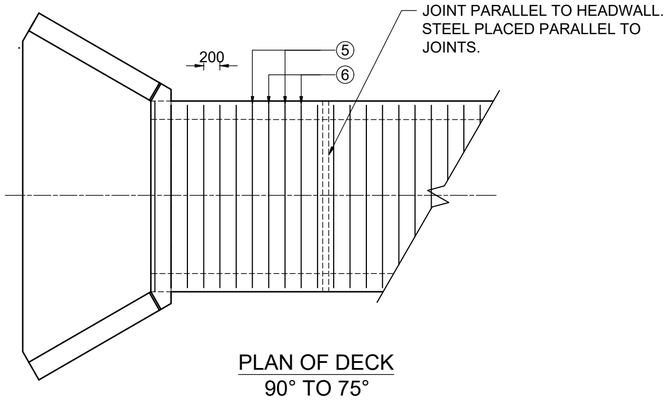

PLAN OF DECK
90° TO 75°

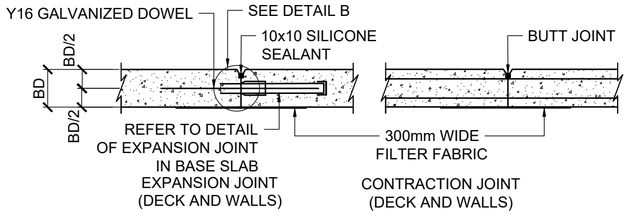

DETAIL D

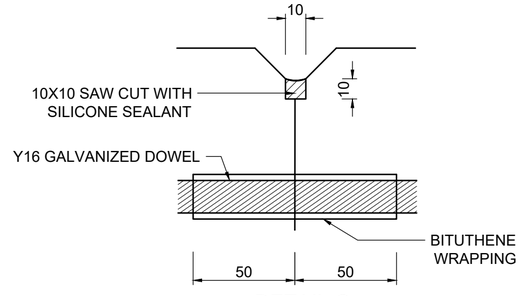

DETAIL C

No.	DATE	ADDITIONS AND AMENDMENTS
0	OCT - 2023	ORIGINAL VERSION

STANDARD PLANS

WESTERN CAPE GOVERNMENT
DEPARTMENT OF INFRASTRUCTURE
TRANSPORT INFRASTRUCTURE BRANCH

INSITU CAST CONCRETE RECTANGULAR PORTAL CULVERTS

REINFORCEMENT DETAILS FOR CULVERTS

SCALE : N.T.S.

A2 ORIGINAL

INDEX NO. WCS/60/4/C4

PLAN NO. SHEET 4 OF 7

Clear Span S (mm)	Fill Height (meter)	Clear Height H (mm)		Slab Depth DD/BD (mm)	Wall Width WW (mm)	Haunch Depth HD (mm)	Max Soil Pressure (Kpa)	Bar No:Diameter with spacing 200mm						Spacing 250mm	Spacing 200mm
		MAX.	MIN.					1 alt 2 Mid span Deck & Base	3 alt 4 Huanch 4 corners	5 alt 6 Deck & Base	7 alt 8 Side Walls Inside	9 alt 10 Side Walls Outside (if 3&4>16)	11 Huanch Side Walls	12 Alt 13 Longitudinal Steel Diameter	14 alt 15 Base Centre Wall
1500	0.00	1500	900	250	225		200	16 16	16 12	10 10	10 10	(12) (10)		10 10	16 12
1500	0.15	1500	900	250	225		190	16 16	16 12	10 10	10 10	(12) (10)		10 10	16 12
1500	0.50	1500	900	225	225		135	16 12	12 12	10 10	10 10	(12) (10)		10 10	12 12
1500	1.00	1500	900	225	225		90	12 12	12 12	10 10	10 10	(12) (10)		10 10	12 12
1500	1.50	1500	900	225	225		90	12 12	12 12	10 10	10 10	(12) (10)		10 10	12 12
1500	2.00	1500	900	225	225		100	12 12	16 12	10 10	10 10	(12) (10)		10 10	16 12
1500	2.50	1500	900	225	225		110	16 12	16 12	10 10	10 10	(12) (10)		10 10	16 12
1500	3.00	1500	900	250	250		125	16 12	16 12	10 10	10 10	(12) (10)		10 10	16 12
1500	3.50	1500	900	250	250		145	16 16	16 16	10 10	10 10	(12) (10)		10 10	16 16
1500	4.00	1500	900	250	250	100	160	16 16	16 16	10 10	10 10	(12) (10)	10	10 10	16 16
1500	4.50	1500	900	300	250	100	180	16 16	16 16	10 10	10 10	(12) (10)	10	10 10	16 16
1500	5.00	1500	900	300	250	125	200	16 16	16 16	10 10	10 10	(12) (10)	10	10 10	16 16
1500	5.50	1500	900	350	300	150	220	16 16	16 16	12 10	12 10	(12) (12)	10	12 10	16 16
1500	6.00	1500	900	350	300	150	240	16 16	16 16	12 10	12 10	(12) (12)	10	12 10	16 16

Clear Span S (mm)	Fill Height (meter)	Clear Height H (mm)		Slab Depth DD/BD (mm)	Wall Width WW (mm)	Haunch Depth HD (mm)	Max Soil Pressure (Kpa)	Bar No:Diameter with spacing 200mm						Spacing 250mm	Spacing 200mm
		MAX.	MIN.					1 alt 2 Mid span Deck & Base	3 alt 4 Huanch 4 corners	5 alt 6 Deck & Base	7 alt 8 Side Walls Inside	9 alt 10 Side Walls Outside (if 3&4>16)	11 Huanch Side Walls	12 Alt 13 Longitudinal Steel Diameter	14 alt 15 Base Centre Wall
3000	0.00	3000	1800	300	300		130	16 16	16 16	10 10	10 10	(12) (10)		10 10	16 16
3000	0.15	3000	1800	300	300		130	16 16	16 16	10 10	10 10	(12) (10)		10 10	16 16
3000	0.50	3000	1800	300	300		125	16 16	16 16	10 10	10 10	(12) (10)		10 10	16 16
3000	1.00	3000	1800	300	300		115	16 16	16 16	10 10	10 10	(12) (10)		10 10	16 16
3000	1.50	3000	1800	300	300		105	20 16	20 16	10 10	10 10	(12) (10)		10 10	20 16
3000	2.00	3000	1800	300	300		110	20 16	20 16	10 10	10 10	12 12		10 10	20 16
3000	2.50	3000	1800	300	350		125	20 16	20 16	12 10	12 10	12 12		12 10	20 16
3000	3.00	3000	1800	350	350	100	135	20 16	20 16	12 10	12 10	12 12		12 10	20 16
3000	3.50	3000	1800	400	350	150	150	20 16	20 16	12 12	12 10	12 12		12 12	20 16
3000	4.00	3000	1800	400	350	150	165	20 16	20 16	12 12	12 10	16 12	12	12 12	20 16
3000	4.50	3000	1800	450	400	200	185	20 20	20 16	16 12	12 12	16 12	12	16 12	20 16
3000	5.00	3000	1800	450	400	200	200	20 20	20 20	16 12	12 12	16 12	12	16 12	20 20
3000	5.50	3000	1800	500	400	250	220	20 20	20 20	16 12	12 12	16 12	12	16 12	20 20
3000	6.00	3000	1800	500	400	300	240	20 20	20 20	16 12	12 12	16 12	12	16 12	20 20

Clear Span S (mm)	Fill Height (meter)	Clear Height H (mm)		Slab Depth DD/BD (mm)	Wall Width WW (mm)	Haunch Depth HD (mm)	Max Soil Pressure (Kpa)	Bar No:Diameter with spacing 200mm						Spacing 250mm	Spacing 200mm
		MAX.	MIN.					1 alt 2 Mid span Deck & Base	3 alt 4 Huanch 4 corners	5 alt 6 Deck & Base	7 alt 8 Side Walls Inside	9 alt 10 Side Walls Outside (if 3&4>16)	11 Huanch Side Walls	12 Alt 13 Longitudinal Steel Diameter	14 alt 15 Base Centre Wall
1800	0.00	1800	1200	250	225		170	16 16	16 16	10 10	10 10	(12) (10)		10 10	16 16
1800	0.15	1800	1200	250	225		165	16 16	16 16	10 10	10 10	(12) (10)		10 10	16 16
1800	0.50	1800	1200	225	225		120	16 16	16 12	10 10	10 10	(12) (10)		10 10	16 12
1800	1.00	1800	1200	225	225		90	16 16	16 12	10 10	10 10	(12) (10)		10 10	16 12
1800	1.50	1800	1200	225	225		90	16 16	16 12	10 10	10 10	(12) (10)		10 10	16 12
1800	2.00	1800	1200	225	225		100	16 16	16 16	10 10	10 10	(12) (10)		10 10	16 16
1800	2.50	1800	1200	250	250		110	16 16	16 16	10 10	10 10	(12) (10)		10 10	16 16
1800	3.00	1800	1200	250	250		125	16 16	16 16	10 10	10 10	(12) (10)		10 10	16 16
1800	3.50	1800	1200	250	250	100	140	20 16	16 16	10 10	10 10	(12) (10)		10 10	16 16
1800	4.00	1800	1200	250	250	100	160	20 16	16 16	10 10	10 10	(12) (10)	10	10 10	16 16
1800	4.50	1800	1200	300	250	125	180	20 16	20 16	10 10	10 10	12 12	10	10 10	20 16
1800	5.00	1800	1200	300	250	125	200	20 16	20 16	10 10	10 10	12 12	10	10 10	20 16
1800	5.50	1800	1200	350	300	150	220	20 16	20 16	12 10	12 10	12 12	10	12 10	20 16
1800	6.00	1800	1200	350	300	150	240	20 16	20 16	12 10	12 10	12 12	10	12 10	20 16

Clear Span S (mm)	Fill Height (meter)	Clear Height H (mm)		Slab Depth DD/BD (mm)	Wall Width WW (mm)	Haunch Depth HD (mm)	Max Soil Pressure (Kpa)	Bar No:Diameter with spacing 200mm						Spacing 250mm	Spacing 200mm
		MAX.	MIN.					1 alt 2 Mid span Deck & Base	3 alt 4 Huanch 4 corners	5 alt 6 Deck & Base	7 alt 8 Side Walls Inside	9 alt 10 Side Walls Outside (if 3&4>16)	11 Huanch Side Walls	12 Alt 13 Longitudinal Steel Diameter	14 alt 15 Base Centre Wall
3600	0.00	3600	2100	350	350		130	16 16	20 16	12 10	12 10	12 12		12 10	20 16
3600	0.15	3600	2100	350	350		130	16 16	20 16	12 10	12 10	12 12		12 10	20 16
3600	0.50	3600	2100	350	350		130	20 16	20 16	12 10	12 10	12 12		12 10	20 16
3600	1.00	3600	2100	350	350		125	20 16	20 16	12 10	12 10	12 12		12 10	20 16
3600	1.50	3600	2100	350	350		125	20 16	20 20	12 10	12 10	12 12		12 10	20 20
3600	2.00	3600	2100	350	350		125	20 20	20 20	12 10	12 10	12 12		12 10	20 20
3600	2.50	3600	2100	400	400		135	20 20	20 20	12 12	12 12	16 12		12 12	20 20
3600	3.00	3600	2100	400	400	100	145	20 20	20 20	12 12	12 12	16 12		12 12	20 20
3600	3.50	3600	2100	450	400	150	160	20 20	20 20	16 12	12 12	16 12		12 12	20 20
3600	4.00	3600	2100	500	450	150	175	20 16	20 20	16 12	12 12	16 12	10	12 12	20 20
3600	4.50	3600	2100	550	500	150	190	25 20	20 20	16 12	16 12	16 16	10	16 12	20 20
3600	5.00	3600	2100	550	500	200	210	25 20	20 20	16 12	16 12	16 16	12	16 12	20 20
3600	5.50	3600	2100	600	500	250	225	25 20	25 20	16 16	16 12	16 16	12	16 16	25 20
3600	6.00	3600	2100	600	500	300	245	25 20	25 20	16 16	16 12	16 16	12	16 16	25 20

Clear Span S (mm)	Fill Height (meter)	Clear Height H (mm)		Slab Depth DD/BD (mm)	Wall Width WW (mm)	Haunch Depth HD (mm)	Max Soil Pressure (Kpa)	Bar No:Diameter with spacing 200mm						Spacing 250mm	Spacing 200mm
		MAX.	MIN.					1 alt 2 Mid span Deck & Base	3 alt 4 Huanch 4 corners	5 alt 6 Deck & Base	7 alt 8 Side Walls Inside	9 alt 10 Side Walls Outside (if 3&4>16)	11 Huanch Side Walls	12 Alt 13 Longitudinal Steel Diameter	14 alt 15 Base Centre Wall
2100	0.00	2100	1200	250	250		160	20 16	16 16	10 10	10 10	(12) (10)		10 10	16 16
2100	0.15	2100	1200	250	250		150	20 16	16 16	10 10	10 10	(12) (10)		10 10	16 16
2100	0.50	2100	1200	250	250		130	16 16	16 16	10 10	10 10	(12) (10)		10 10	16 16
2100	1.00	2100	1200	250	250		90	16 16	16 16	10 10	10 10	(12) (10)		10 10	16 16
2100	1.50	2100	1200	250	250		90	16 16	16 16	10 10	10 10	(12) (10)		10 10	16 16
2100	2.00	2100	1200	250	300		100	16 16	16 16	10 10	10 10	(12) (10)		10 10	16 16
2100	2.50	2100	1200	250	300		110	16 16	16 16	10 10	10 10	(12) (10)		10 10	16 16
2100	3.00	2100	1200	300	300		125	16 16	16 16	12 10	10 10	(12) (10)		10 10	16 16
2100	3.50	2100	1200	350	300	100	140	20 16	16 16	12 10	10 10	(12) (10)		12 10	16 16
2100	4.00	2100	1200	350	300	100	155	20 16	16 16	12 10	10 10	(12) (10)	10	12 10	16 16
2100	4.50	2100	1200	350	300	150	175	20 16	20 16	12 10	12 10	12 12	10	12 10	20 16
2100	5.00	2100	1200	400	350	150	200	20 16	20 16	12 12	12 10	12 12	10	12 12	20 16
2100	5.50	2100	1200	400	350	200	220	20 20	20 16	12 12	12 10	12 12	12	12 12	20 16
2100	6.00	2100	1200	400	350	200	240	20 20	20 16	12 12	12 10	12 12	12	12 12	20 16

Clear Span S (mm)	Fill Height (meter)	Clear Height H (mm)		Slab Depth DD/BD (mm)	Wall Width WW (mm)	Haunch Depth HD (mm)	Max Soil Pressure (Kpa)	Bar No:Diameter with spacing 200mm						Spacing 250mm	Spacing 200mm
		MAX.	MIN.					1 alt 2 Mid span Deck & Base	3 alt 4 Huanch 4 corners	5 alt 6 Deck & Base	7 alt 8 Side Walls Inside	9 alt 10 Side Walls Outside (if 3&4>16)	11 Huanch Side Walls	12 Alt 13 Longitudinal Steel Diameter	14 alt 15 Base Centre Wall
4200	0.00	4200	2400	400	400		130	20 16	20 16	12 12	12 12	16 12		12 12	20 16
4200	0.15	4200	2400	400	400		135	20 16	20 16	12 12	12 12	16 12		12 12	20 16
4200	0.50	4200	2400	400	400		130	20 16	20 20	12 12	12 12	16 12		12 12	20 20
4200	1.00	4200	2400	400	400		130	20 16	20 20	12 12	12 12	16 12		12 12	20 20
4200	1.50	4200	2400	450	450		130	20 16	20 20	16 12	16 12	16 16		16 12	20 20
4200	2.00	4200	2400	500	500		130	20 16	20 20	16 12	16 12	16 16		16 12	20 20
4200	2.50	4200	2400	550	500		140	20 16	20 20	16 12	16 12	16 16		16 12	20 20
4200	3.00	4200	2400	550	500	100	150	20 20	20 20	16 12	16 12	16 16		16 12	20 20
4200	3.50	4200	2400	600	500	150	165	20 20	20 20	16 16	16 12	16 16		16 16	20 20
4200	4.00	4200	2400	600	500	150	180	20 20	25 20	16 16	16 12	16 16	10	16 16	25 20
4200	4.50	4200	2400	650	550	200	195	20 20	25 20	16 16	16 12	16 16	12	16 16	25 20
4200	5.00	4200	2400	700	600	200	210	20 20	25 20	16 16	16 16	20 16	12	16 16	25 20
4200	5.50	4200	2400	750	650	250	225	25 20	25 20	20 16	16 16	20 16	12	20 16	25 20
4200	6.00	4200	2400	750	650	300	245	25 20	25 20	20 16	16 16	20 16	12	20 16	25 20

Clear Span S (mm)	Fill Height (meter)	Clear Height H (mm)		Slab Depth DD/BD (mm)	Wall Width WW (mm)	Haunch Depth HD (mm)	Max Soil Pressure (Kpa)	Bar No:Diameter with spacing 200mm						Spacing 250mm	Spacing 200mm
		MAX.	MIN.					1 alt 2 Mid span Deck & Base	3 alt 4 Huanch 4 corners	5 alt 6 Deck & Base	7 alt 8 Side Walls Inside	9 alt 10 Side Walls Outside (if 3&4>16)	11 Huanch Side Walls	12 Alt 13 Longitudinal Steel Diameter	14 alt 15 Base Centre Wall
2400	0.00	2400	1500	250	250		140	20 16	16 16	10 10	10 10	(12) (10)		10 10	16 16
2400	0.15	2400	1500	250	250		140	20 16	16 16	10 10	10 10	(12) (10)		10 10	16 16
2400	0.50	2400	1500	250	250		125	16 16	16 16	10 10	10 10	(12) (10)		10 10	16 16
2400	1.00	2400	1500	250	250		100	16 16	16 16	10 10	10 10	(12) (10)		10 10	16 16
2400	1.50	2400	1500	250	250		100	16 16	16 16	10 10	10 10	(12) (10)		10 10	16 16
2400	2.00	2400	1500	250	250		100	20 16	16 16	10 10	10 10	(12) (10)		10 10	16 16
2400	2.50	2400	1500	300	300		115	20 16	20 16	10 10	12 10	12 12		12 10	20 16
2400	3.00	2400	1500	300	300	100	130	20 16	20 16	10 10	12 10	12 12		12 10	20 16
2400	3.50	2400	1500	350	300	100	145	20 16	20 16	12 10	12 10	12 12		12 12	20 16
2400	4.00	2400	1500	350	300	100	160	20 16	20 16	12 10	12 10	12 12	10	12 12	20 16
2400	4.50	2400	1500	400	350	150	175	20 20	20 16	12 12	12 12	16 12	10	12 12	20 16
2400	5.00	2400	1500	400	350	150	200	20 20	20 16	12 12	12 12	16 12	10	12 12	20 16
2400	5.50	2400	1500	450	400	200	220	20 20	20 20	16 12	12 12	16 12	12	16 12	20 20
2400	6.00	2400	1500	450	400	200	240	20 20	20 20	16 12	12 12	16 12	12	16 12	20 20

Clear Span S (mm)	Fill Height (meter)	Clear Height H (mm)		Slab Depth DD/BD (mm)	Wall Width WW (mm)	Haunch Depth HD (mm)	Max Soil Pressure (Kpa)	Bar No:Diameter with spacing 200mm						Spacing 250mm	Spacing 200mm
		MAX.	MIN.					1 alt 2 Mid span Deck & Base	3 alt 4 Huanch 4 corners	5 alt 6 Deck & Base	7 alt 8 Side Walls Inside	9 alt 10 Side Walls Outside (if 3&4>16)	11 Huanch Side Walls	12 Alt 13 Longitudinal Steel Diameter	14 alt 15 Base Centre Wall
4800	0.00	4800	3000	450	450		135	20 20	20 20	16 12	16 12	16 16		16 12	20 20
4800	0.15	4800	3000	450	450		135	20 20	20 20	16 12	16 12	16 16		16 12	20 20
4800	0.50	4800	3000	450	450		140	20 20	25 20	16 12	16 12	16 16		16 12	25 20
4800	1.00	4800	3000	500	500		140	20 20	25 20	16 12	16 12	16 16		16 12	25 20
4800	1.50	4800	3000	500	500		140	25 20	25 20	16 12	16 12	16 16		16 12	25 20
4800	2.00	4800	3000	550	550		150	25 20	25 20	16 12	16 12	16 16		16 12	25 20
4800	2.50	4800	3000	600	600		150	25 20	25 20	16 16	16 16	20 16		16 16	25 20
4800	3.00	4800	3000	600	600	100	160	25 20	25 20	16 16	16 16	20 16		16 16	25 20
4800	3.50	4800	3000	650	600	150	175	25 20	25 20	16 16	16 16	20 16		16 16	25 20
4800	4.00	4800	3000	700	600	200	190	25 20	25 20	16 16	16 16	20 16	12	16 16	25 20
4800	4.50	4800	3000	750	650	250	200	25 20	25 20	20 16	16 16	20 16	12	20 16	25 20
4800	5.00	4800	3000	800	700	250	215	25 20	25 20	20 16	16 16	20 20	12	20 16	25 20
4800	5.50	4800	3000	850	750	250	235	25 25	25 25	20 16	20 16	20 20	12	20 16	25 25
4800	6.00	4800	3000	850	750	300	250	25 25	25 25	20 16	20 16	20 20	12	20 16	25 25

No.	DATE	ADDITIONS AND AMENDMENTS
0	OCT - 2023	ORIGINAL VERSION

STANDARD PLANS

WESTERN CAPE GOVERNMENT
DEPARTMENT OF INFRASTRUCTURE
TRANSPORT INFRASTRUCTURE BRANCH

INSITU CAST CONCRETE RECTANGULAR PORTAL CULVERTS

CONCRETE AND REINFORCEMENT TABULATIONS

SCALE : N.T.S.

A2 ORIGINAL

INDEX NO. WCS/60/4/C5

PLAN NO. SHEET 5 OF 7

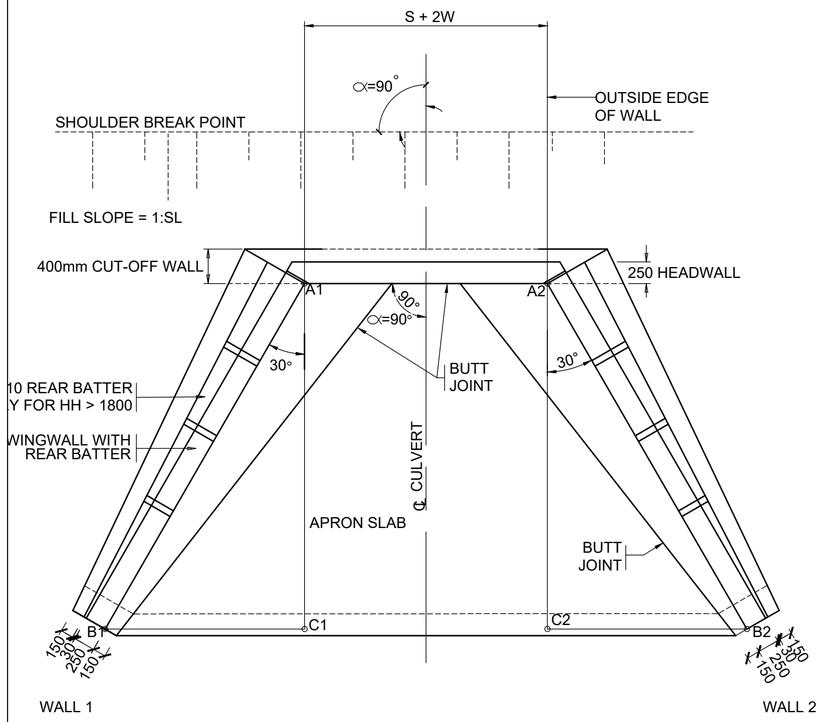

PLAN - SQUARE CULVERTS

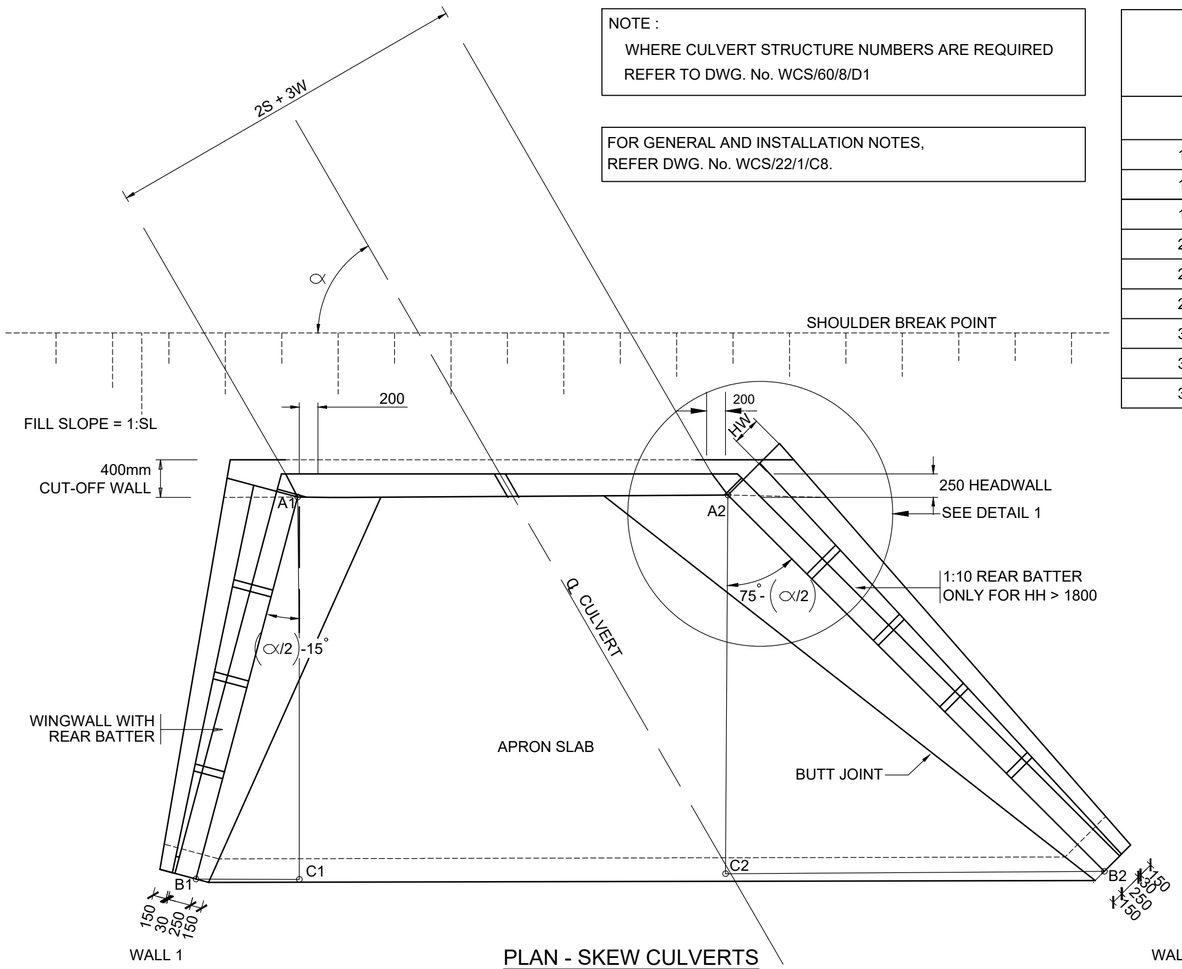

PLAN - SKEW CULVERTS

NOTE :
WHERE CULVERT STRUCTURE NUMBERS ARE REQUIRED REFER TO DWG. No. WCS/60/8/D1

FOR GENERAL AND INSTALLATION NOTES, REFER DWG. No. WCS/22/1/C8.

WINGWALL FOUNDATION DIMENSIONS FOR HEADWALL HEIGHTS 1200-3600 mm

HH	HW	TW	FD
1200	150	600	225
1500	200	650	225
1800	200	700	225
2100	250	750	250
2400	250	800	250
2700	300	850	300
3000	300	900	300
3300	350	950	350
3600	500	1000	350

NOTATION:

HH : HEADWALL HEIGHT

HW : HEEL WIDTH

TW : TOE WIDTH

FD : FOUNDATION DEPTH

W : EXTERNAL WIDTH OF PORTAL

SETTING OUT CALCULATIONS (SQUARE CULVERTS):	SETTING OUT CALCULATIONS (SKEW CULVERTS):	CALCULATED EXAMPLE (SQUARE CULVERTS):	CALCULATED EXAMPLE (SKEW CULVERTS):
1) CALCULATE SLOPE OF TOP OF WINGWALL: FILL SLOPE = 1:SL WALL1: SL1= SL/cos 30° WALL2: SL2= SL/cos 30°	SL1= $\frac{SL}{COS((\alpha/2)-15)}$ SL2= $\frac{SL}{COS(75-(\alpha/2))}$	SL= 1.5; H1= 3.00; H2= 0.30; ∝ = 90° SL1= 1.732 SL2= 1.732	SL= 1.5; H1= 3.00; H2= 0.30; ∝ = 60° SL1= 1.553 SL2= 2.121
2) CALCULATE LENGTH OF WINGWALL: H1 = WINGWALL HEIGHT AT HEADWALL H2 = WINGWALL HEIGHT AT CUT-OFF WALL (NORMALLY 300mm) WALL1: A1B1= (H1-H2)SL1 WALL2: A2B2= (H1-H2)SL2	WALL1: A1B1= (H1-H2)SL1 WALL2: A2B2= (H1-H2)SL2	A1B1= 4.676m A2B2= 4.676m	A1B1= 4.193m A2B2= 5.727m
3) CALCULATE SETTING OUT OF WINGWALL: WALL1: A1C1= A1B1 cos 30° C1B1= A1B1 sin 30° WALL2: A2C2= A2B2 cos 30° C2B2= A2B2 sin 30°	A1C1= A1B1 COS ((∝/2)-15) C1B1= A1B1 SIN ((∝/2)-15) A2C2= A2B2 COS (75-(∝/2)) C2B2= A2B2 SIN (75-(∝/2))	A1C1= 4.050m C1B1= 2.338m A2C2= 4.050m C2B2= 2.338m	A1C1= 4.050m C1B1= 1.085m A2C2= 3.728m C2B2= 4.050m

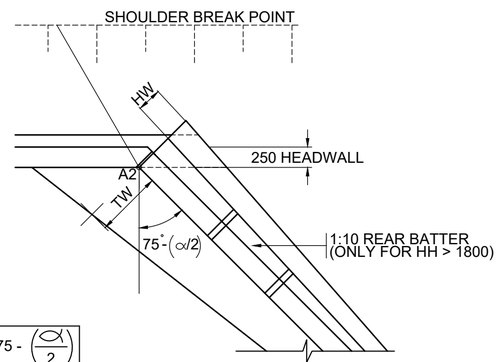

DETAIL 1

∝	(∝/2) - 15	75 - (∝/2)
90	30	30
80	25	35
70	20	40
60	15	45
50	10	50
40	5	55
30	0	60

No.	DATE	ADDITIONS AND AMENDMENTS
0	OCT - 2023	ORIGINAL VERSION

STANDARD PLANS

WESTERN CAPE GOVERNMENT
DEPARTMENT OF INFRASTRUCTURE
TRANSPORT INFRASTRUCTURE BRANCH

INSITU CAST CONCRETE RECTANGULAR PORTAL CULVERTS

GENERAL DETAILS OF WINGWALLS AND SETTING OUT

SCALE : N.T.S.

A2 ORIGINAL

INDEX NO. WCS/60/4/C6

PLAN NO. SHEET 6 OF 7

CUT-OFF WALLS

(SEE TABLE 1 AND 2)

CUT-OFF DIMENSIONS (FOR PROTECTION AGAINST PIPING) ARE BASED ON
"SOIL MECHANICS IN ENGINEERING PRACTISE" BY TERZAGHI & PECK

$T = (C_W \times H) - B/3$

WHERE T = TOTAL OF CUT-OFF VERTICAL FACE DEPTHS REQUIRED AGAINST PIPING
H = WATER HEAD : (DIFFERENCE BETWEEN INLET AND OUTLET FLOW PROFILE WITH INLET OPERATING AT 1,5 HT)
B = HORIZONTAL DISTANCE COMPONENT OF LINE OF CREEP FOR STRUCTURE (ASSUMED AT 15,0 METRES).
HORIZONTAL SECTION OF LINE OF CREEP ASSUMED 1/3 AS EFFECTIVE AS A VERTICAL SECTION OF THE SAME LENGTH.
C_W = WEIGHTED CREEP RATIO (SEE TABLE)

MATERIAL	C_W
VERY FINE SAND/SILT	8.5
FINE SAND	7.0
MEDIUM SAND	6.0
COARSE SAND	5.0
FINE GRAVEL	4.0
MEDIUM GRAVEL	3.5
COARSE GRAVEL/COBBLES	3.0
BOULDERS (COBBLES & GRAVEL)	2.5

TABLE 1

CUT-OFF WALL DEPTHS

CLEAR HEIGHT OF PORTAL H (mm)	MATERIAL: VERY FINE TO FINE SAND						MATERIAL: MEDIUM TO COARSE SAND					
	CULVERT SLOPE						CULVERT SLOPE					
	3%		2%		1%		3%		2%		1%	
	TC1	TC2	TC1	TC2	TC1	TC2	TC1	TC2	TC1	TC2	TC1	TC2
600	800	500	800	500	800	500	800	500	800	500	800	500
750	800	500	800	500	800	500	800	500	800	500	800	500
900	800	600	800	500	800	500	800	500	800	500	800	500
1200	900	900	800	800	800	600	800	500	800	500	800	500
1500	1200	1200	1100	1100	800	800	800	800	800	700	800	500
1800	1500	1500	1400	1400	1000	1000	1000	1000	900	900	800	600
2100	1500	1500	1500	1500	1200	1200	1200	1200	1100	1100	800	800
2400	1500	1500	1500	1500	1400	1400	1400	1400	1300	1300	900	900
3000	1500	1500	1500	1500	1500	1500	1500	1500	1500	1500	1100	1100

TABLE 2

CUT-OFF WALL DEPTHS

CLEAR HEIGHT OF PORTAL H (mm)	MATERIAL: FINE TO MEDIUM GRAVEL						MATERIAL: COARSE GRAVEL /COBBLES TO BOULDERS					
	CULVERT SLOPE						CULVERT SLOPE					
	3%		2%		1%		3%		2%		1%	
	TC1	TC2	TC1	TC2	TC1	TC2	TC1	TC2	TC1	TC2	TC1	TC2
600	500	500	500	500	500	500	500	500	500	500	500	500
750	500	500	500	500	500	500	500	500	500	500	500	500
900	500	500	500	500	500	500	500	500	500	500	500	500
1200	500	500	500	500	500	500	500	500	500	500	500	500
1500	500	500	500	500	500	500	500	500	500	500	500	500
1800	500	500	500	500	500	500	500	500	500	500	500	500
2100	700	700	600	600	500	500	500	500	500	500	500	500
2400	800	800	700	700	500	500	500	500	600	500	500	500
3000	1100	1100	1000	1000	600	600	700	700	600	600	500	500

NOTE : THESE VALUES ARE THE MINIMUM REQUIRED FOR PROTECTION AGAINST PIPING. THE VALUE OF TC1 (DOWNSTREAM SIDE) SHOULD, FOR PURPOSES OF PROTECTION AGAINST SCOUR, BE INCREASED IN CASE OF HIGH OUTLET VELOCITY AND INSITU MATERIALS OF LOW EROSION RESISTANCE.

No.	DATE	ADDITIONS AND AMENDMENTS
0	OCT - 2023	ORIGINAL VERSION

STANDARD PLANS

WESTERN CAPE GOVERNMENT
DEPARTMENT OF INFRASTRUCTURE
TRANSPORT INFRASTRUCTURE BRANCH

INSITU CAST CONCRETE RECTANGULAR PORTAL CULVERTS

TABULATIONS AND DESIGN NOTES

SCALE : N.T.S.

A2 ORIGINAL

INDEX NO. WCS/60/4/C7

PLAN NO. SHEET 7 OF 7

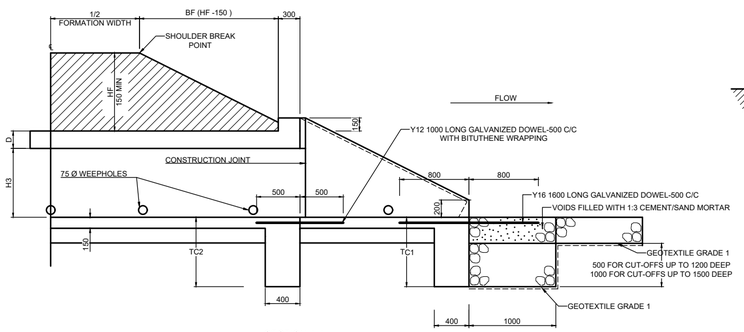

SECTION A-A

NOTES

1.) CORRELATE DESIGN FLOOD OUTLET VELOCITY WITH EROSION RESISTANCE OF IN-SITU MATERIAL IN DECIDING ON NECESSITY OF GABION MATTRESS APRON.

2.) INVERT SLAB AND CUT-OFF WALLS MAY BE OMITTED IF CULVERT FOUNDED ON ROCK OR OTHER NON-ERODABLE MATERIAL.

3.) BACK FILLING OF ABUTMENTS TO BE EFFECTED AFTER CONSTRUCTION OF DECKSLAB.

4.) CONTRACTION JOINTS SHALL BE PROVIDED IN SUBSTRUCTURE WALLS AT 10000 MAX. SPACING.

5.) CUT-OFF WALLS TO BE CAST INTEGRALLY WITH INVERT SLAB.

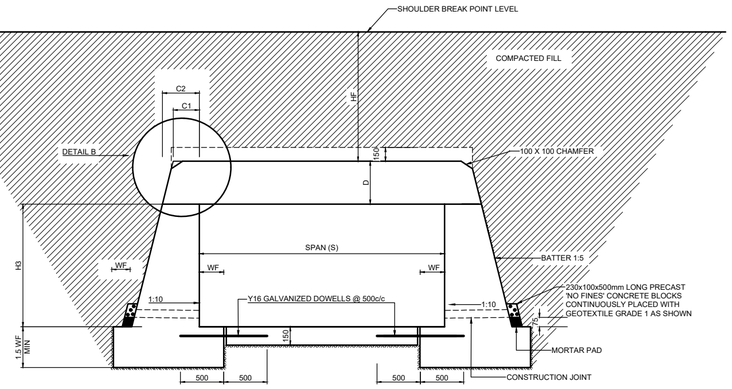

SECTION B-B

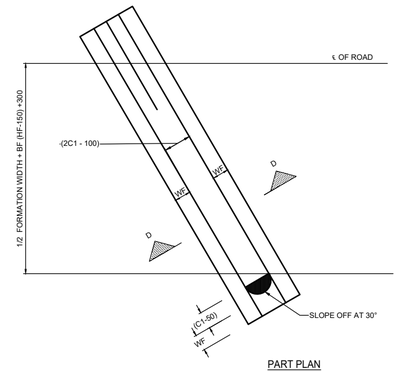

PART PLAN

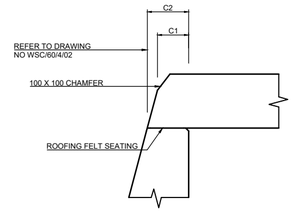

DETAIL B

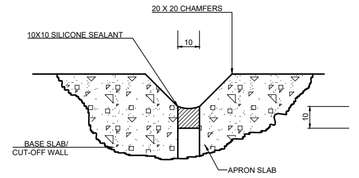

DETAIL C

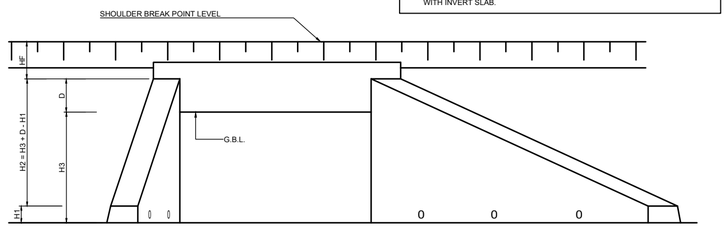

ELEVATION - SKEW CULVERTS

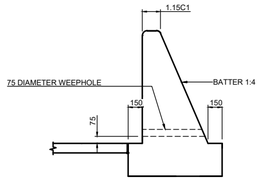

SECTION C-C

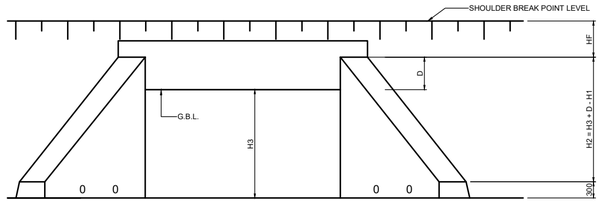

ELEVATION - SQUARE CULVERT

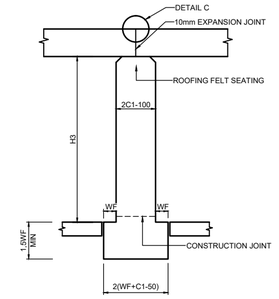

SECTION D-D

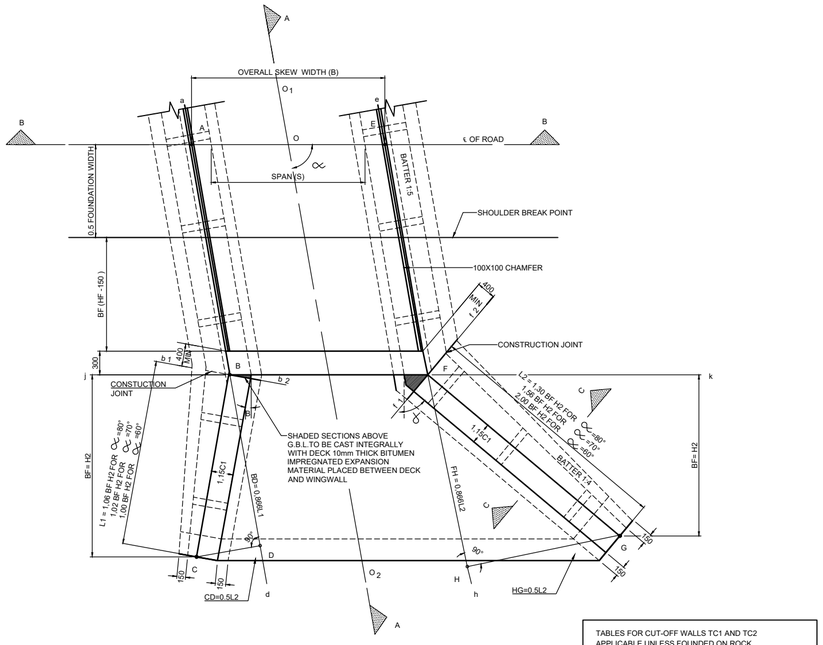

PART PLAN 60° TO 80° SKEW CULVERT

TABLES FOR CUT-OFF WALLS TC1 AND TC2 APPLICABLE UNLESS FOUNDED ON ROCK REFER TO DWG. No. WCS/22/1/D1

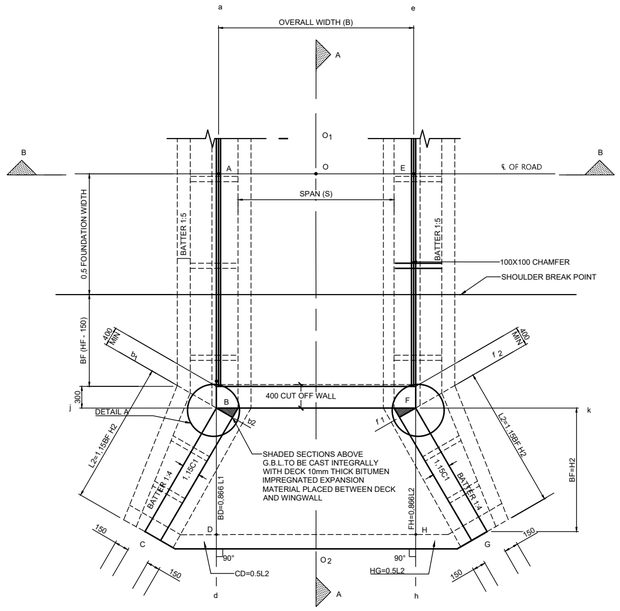

PART PLAN - SQUARE CULVERT

∝	X	Y
90°	1,042	5,909
70°	2,052	5,638
60°	3,000	5,196

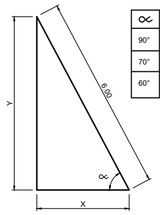

SETTING OUT TRIANGLE

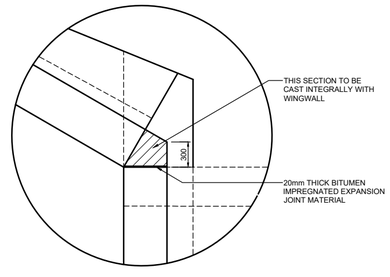

DETAIL A

SETTING OUT PROCEDURE

1. MAKE AN ESTIMATE OF SKEW ANGLE (∝) TO NEAREST 10 DEGREES. SET OUT ℄ CULVERT 0, 0, BY MAKING USE OF THE DEGREE SETTING OUT TRIANGLE. IF SET OUT ℄ DOES NOT CORRESPOND APPROX. WITH INTENDED ℄ CHOOSE ANOTHER ANGLE AND RESET 0, 0, UNTIL ℄ CORRESPONDS WITH INTENDED ℄.
2. ESTABLISH POINTS A & E ON ROAD ℄:
   ∝= 90° : EO = OA = 0,5S+C1 : ∝= 80° : EO = OA = 0,5S+1,02C1
   ∝= 70° : EO = OA = 0,5S+1,06C1 : ∝= 60° : EO = OA = 0,5S+1,15C1
3. OBTAIN LINES ad AND eh PARALLEL TO CULVERT ℄. OBTAIN HALF OUTSIDE SQUARE LENGTH OF CULVERT LENGTH = 1/2 FORMATION WIDTH+BF(HF-150)+300
   WHERE BF = BATTER OF SLOPE OF FILL AND HF = HEIGHT OF FILL ABOVE CULVERT DECK AT SHOULDER BREAK POINT LEVEL.
4. SET OUT LINE jk PARALLEL TO ℄ ROAD. WHERE THIS LINE INTERSECTS LINE ad ESTABLISH POINT B AND WHERE IT INTERSECTS LINE eh ESTABLISH POINT F.
5. DETERMINE WINGWALL LENGTHS L1 AND L2 BY USING THE FORMULA INDICATED AND H2 = DROP IN LEVEL BETWEEN WINGWALL HIGHEST AND LOWEST POINTS. SET OUT TRIANGLES BDC AND FHG TO OBTAIN POINTS C AND G.
6. CALCULATE THE BASE DIMENSION OF THE ABUTMENT BREASTWALLS BY CONSIDERING A SQUARE CROSS SECTION. C1 IS MEASURED INWARDS OF THE REFERENCE LINES ad AND eh AND AS THE BACK BATTER EXTENDS FROM THE TOP OF THE DECKSLAB. ABUTMENT BASE WIDTH = C1+0,22(H3+D). WHERE H3 = HEIGHT OF ABUTMENT TO G.B.L AND D = DECK THICKNESS.
7. CALCULATE THE BASE DIMENSIONS OF THE WINGWALLS AT THE HIGHEST POINTS B AND F. WINGWALL BASE WIDTH = 1,15C1 + 0,25(H3 + D). SET OUT LINES b_1b_2 and f_1f_2 SQUARE TO BC AND FG RESPECTIVELY. MEASURE THE WINGWALL TOP WIDTH 1,15C1 FORWARD OF LINES BC AND FG. NOTE THAT AT LINES b_1b_2 AND f_1f_2 CONSTRUCTION JOINTS ARE ESSENTIAL AND THAT THE BREASTWALL AND WINGWALL BATTERS MEET ON A COMMON FACE. AT THE LOWEST POINTS C AND G. WINGWALL BASE WIDTH= 1.15C+0.25H1. SET THESE WIDTHS OUT SQUARE TO BC AND FG.
8. FOR A LEVEL CULVERT AND ROAD ON THE STRAIGHT THE CULVERT WILL BE SYMMETRICAL ABOUT ℄ ROAD WAY SO THAT FULL BASE DIMENSIONS OF THE SUBSTRUCTURE ARE NOW AVAILABLE. IT NOW REMAINS TO DETERMINE THE FOUNDATION PROFILE.
9. REFER TO TABLE 2 AND ESTIMATE THE SAFE BEARING CAPACITY OF THE FOUNDATION MATERIAL. FOR THE PARTICULAR TYPE OF BACKFILLING MATERIAL, SELECT AN ABUTMENT FOOTING PROJECTION WIDTH WF FROM TABLE 1 SUCH THAT THE SAFE BEARING CAPACITY OF THE SUBSOIL IS NOT EXCEEDED. SET OUT WF FORWARD AND BACK OF THE ABUTMENT BASE WIDTH AND PROJECT THE FOOTING LINES TO INTERSECT b_1b_2. FROM THESE INTERSECTION POINTS TAPER THE WINGWALL FOOTING PROJECTION WIDTH DOWN TO 150 ON EACH SIDE AT WINGWALL END.

NOTES :

A) IF THE BEARING CAPACITY REQUIREMENTS OF THE FOUNDING MATERIAL CANNOT BE SATISFIED, A CELLULAR BOX DESIGN WILL BE REQUIRED.

B) IF THE ROAD IS SUPERELEVATED AND/OR THE CULVERT IS BUILT ON A SLOPE,ALLOWANCE SHALL BE MADE IN CALCULATING THE DIMENSIONS OF THE CULVERT.

C) SUPERIMPOSED DESIGN LOADING : EARTH DEAD AND HIGHWAY LIVE LOAD IN ACCORDANCE WITH TMH 7 PARTS 1&2.

D) THIS DRAWING TO BE READ IN CONJUNCTION WITH DWG. No. WCS/60/4/D2, WCS/60/4/D3 AND WCS/60/4/D4

THIS PLAN IS TO BE USED FOR EXTENDING OF OLD STRUCTURES ONLY

No.	DATE	ADDITIONS AND AMENDMENTS
0	OCT - 2023	ORIGINAL VERSION

STANDARD PLANS

WESTERN CAPE GOVERNMENT
DEPARTMENT OF INFRASTRUCTURE
TRANSPORT INFRASTRUCTURE BRANCH

INSITU CAST CONCRETE RECTANGULAR PORTAL CULVERTS

SETTING OUT

SCALE : N.T.S.

A2 ORIGINAL

INDEX NO. WCS/60/4/D1

PLAN NO. SHEET 1 OF 4

CLEAR SPAN S	ABUT SEATING		FILL HEIGHT HF m	DECK THICK-NESS D mm	DECK REINFORCEMENT				CULVERT HEIGHT H3	MAXIMUM ABUTMENT TOE PRESURE kPa.							
					MAIN		TRANSVERSE			EQUIV FLUID PRESS. 5,6 kPa				EQUIV FLUID PRESS. 7,8 kPa.			
	C1	C2			DIAM	SPACING	DIAM	SPACING		WF=150	WF=300	WF=450	WF=600	WF=150	WF=300	WF=450	WF=600
1,0	205		252	0,1	210	Y12	100	Y12	150	0,5	163	97			166	100		
										1,0	188	117			196	124		
			252	0,5	210	Y12	100	Y12	150	0,5	118	69			122	73		
										1,0	146	90			156	98		
			252	1,0	210	Y12	100	Y12	150	0,5	93	54			99	59		
										1,0	125	77			137	86		
			252	1,5	210	Y12	100	Y12	150	0,5	93	53			99	59		
										1,0	128	78			143	89		
			252	2,0	210	Y12	100	Y12	150	0,5	106	61			114	67		
										1,0	145	89			162	101		
			252	2,5	210	Y12	100	Y12	150	0,5	127	73			136	80		
										1,0	170	104			190	118		
			252	3,0	210	Y12	100	Y12	150	0,5	152	87			161	95		
										1,0	199	121			220	137		
			252	3,5	210	Y12	100	Y12	150	0,5	177	102			188	111		
										1,0	228	139			252	156		
			252	4,0	210	Y12	100	Y12	150	0,5	204	118			215	127		
										1,0	259	158			284	176		
			252	4,5	210	Y12	100	Y12	150	0,5	230	133			243	143		
										1,0	289	176			316	196		
			252	5,0	210	Y12	100	Y12	150	0,5	257	149			271	160		
										1,0	320	195			349	217		
			252	6,0	210	Y12	100	Y12	150	0,5	312	181			327	193		
										1,0	382	233			415	258		
			256	7,0	230	Y12	100	Y12	150	0,5	367	213			384	227		
										1,0	444	271			481	299		
			258	8,0	240	Y12	100	Y12	150	0,5	422	245			441	261		
										1,0	507	310			547	340		
			263	9,0	260	Y12	90	Y12	150	0,5	478	278			498	295		
										1,0	569	348			614	381		
			265	10,0	270	Y16	150	Y12	150	0,5	533	311			556	329		
										1,0	631	386			679	422		
1,5	217		270	0,1	240	Y16	150	Y12	150	0,5	144	87	60		147	90	63	
										1,0	168	106	75		176	112	81	
										1,5	192	126	92		206	137	101	
			270	0,5	240	Y16	150	Y12	150	0,5	120	72	49		124	75	53	
										1,0	148	92	65		158	100	72	
										1,5	175	115	83		193	128	94	
			270	1,0	240	Y16	150	Y12	150	0,5	114	67	46		119	72	50	
										1,0	145	90	63		157	99	71	
										1,5	177	115	83		197	130	96	
			270	1,5	240	Y16	150	Y12	150	0,5	117	68	46		123	74	51	
										1,0	151	94	66		166	104	75	
										1,5	186	121	87		210	138	102	
			270	2,0	240	Y16	150	Y12	150	0,5	133	78	53		140	84	58	
										1,0	171	106	74		187	118	84	
										1,5	209	136	98		236	155	114	
			270	2,5	240	Y16	150	Y12	150	0,5	157	92	62		165	99	68	
										1,0	199	123	86		217	137	98	
										1,5	240	155	112		270	177	130	
			270	3,0	240	Y16	150	Y12	150	0,5	186	109	74		195	117	81	
										1,0	232	143	100		252	159	113	
										1,5	276	178	128		309	202	148	
			270	3,5	240	Y16	150	Y12	150	0,5	220	129	88		230	138	96	
										1,0	270	167	117		292	183	131	
										1,5	316	204	147		352	231	168	
			270	4,0	240	Y16	150	Y12	150	0,5	256	151	103		267	160	111	
										1,0	309	191	134		333	209	149	
										1,5	358	231	166		397	260	189	
			273	4,5	250	Y16	150	Y12	150	0,5	292	172	118		304	182	127	
										1,0	349	216	151		375	235	168	
										1,5	400	259	186		442	289	210	
			275	5,0	260	Y16	150	Y12	150	0,5	329	194	133		341	205	142	
										1,0	389	241	169		417	262	186	
										1,5	443	286	205		487	319	232	
			281	6,0	290	Y16	140	Y12	150	0,5	403	238	163		417	250	174	
										1,0	469	291	204		501	315	224	
										1,5	528	341	245		577	378	275	
			286	7,0	310	Y16	130	Y12	150	0,5	477	283	194		493	296	206	
										1,0	550	341	240		585	368	262	
										1,5	613	397	285		U.S.	437	318	
			290	8,0	330	Y16	120	Y12	150	0,5	552	328	225		569	342	239	
										1,0	631	392	276		669	421	300	
										1,5	698	452	325		U.S.	496	361	
			295	9,0	350	Y16	110	Y12	150	0,5	627	373	256		645	389	271	
										1,0	712	443	311		753	474	338	
										1,5	782	507	365		U.S.	556	404	
			297	10,0	360	Y16	110	Y12	150	0,5	702	418	288		722	436	304	
										1,0	792	494	347		837	528	376	
										1,5	867	563	405		U.S.	615	447	
2,0	230		288	0,1	260	Y16	140	Y12	150	1,0	157	100	71	55	165	106	77	60
										1,5	181	119	88	68	194	130	97	76
										2,0	206	141	106	83	U.S.	157	119	95
			288	0,5	260	Y16	140	Y12	150	1,0	151	95	68	52	161	103	75	58
										1,5	178	118	86	66	195	130	97	76
										2,0	207	142	106	83	U.S.	160	121	97
			288	1,0	260	Y16	140	Y12	150	1,0	158	99	70	53	170	108	78	61
										1,5	189	124	90	70	209	139	103	81
										2,0	221	150	112	88	U.S.	172	130	103
			288	1,5	260	Y16	140	Y12	150	1,0	174	109	77	58	187	119	86	66
										1,5	208	136	98	76	230	153	113	88
										2,0	242	164	122	96	U.S.	189	142	113
			288	2,0	260	Y16	140	Y12	150	1,0	197	123	86	66	212	135	97	75
										1,5	234	153	110	85	260	172	126	99
										2,0	270	183	136	106	U.S.	211	158	126
			288	2,5	260	Y16	140	Y12	150	1,0	228	142	100	76	245	156	112	86
										1,5	267	174	126	97	296	196	144	112
										2,0	306	207	153	120	U.S.	238	178	141
			288	3,0	260	Y16	140	Y12	150	1,0	264	165	116	88	283	180	129	99
										1,5	306	200	144	111	338	223	164	128
										2,0	347	235	173	135	U.S.	268	200	158
			290	3,5	270	Y16	140	Y12	150	1,0	305	191	134	102	326	207	148	114
										1,5	349	228	165	126	383	253	185	145
										2,0	392	265	196	153	U.S.	301	225	178
			294	4,0	290	Y16	140	Y12	150	1,0	350	219	155	117	373	236	169	130
										1,5	396	259	187	144	433	286	209	163
										2,0	440	298	220	171	U.S.	336	251	198
			297	4,5	300	Y16	130	Y12	150	1,0	398	249	176	133	423	268	192	148
										1,5	447	292	211	162	486	321	235	183
										2,0	492	333	246	192	U.S.	374	279	220
			301	5,0	320	Y16	120	Y12	150	1,0	447	280	198	150	473	300	215	165
										1,5	498	325	235	180	540	356	261	203
										2,0	U.S.	368	272	212	U.S.	412	307	242
			308	6,0	350	Y16	110	Y16	300	1,0	545	343	242	184	575	365	262	201
										1,5	599	392	283	218	646	427	312	243
										2,0	U.S.	439	324	253	U.S.	488	363	286
			314	7,0	380	Y16	100	Y16	300	1,0	644	405	287	218	676	430	308	237
										1,5	701	459	332	256	U.S.	498	364	283
										2,0	U.S.	510	376	293	U.S.	563	420	331
			321	8,0	410	Y20	150	Y16	300	1,0	742	468	332	252	778	496	355	273
										1,5	803	526	381	293	U.S.	569	416	324
										2,0	U.S.	581	429	334	U.S.	639	476	375
			328	9,0	440	Y20	140	Y16	300	1,0	841	531	377	287	879	561	402	309
										1,5	904	594	430	331	U.S.	640	468	364
										2,0	U.S.	651	481	375	U.S.	715	533	420
			332	10,0	460	Y20	130	Y16	300	1,0	939	594	422	321	981	626	450	346
										1,5	1005	661	479	369	U.S.	711	520	405
										2,0	U.S.	722	534	417	U.S.	790	589	464

CLEAR SPAN S	ABUT SEATING		FILL HEIGHT HF m	DECK THICK-NESS D mm	DECK REINFORCEMENT				CULVERT HEIGHT H3	MAXIMUM ABUTMENT TOE PRESURE kPa.							
					MAIN		TRANSVERSE			EQUIV FLUID PRESS. 5,6 kPa				EQUIV FLUID PRESS. 7,8 kPa.			
	C1	C2			DIAM	SPACING	DIAM	SPACING		WF=150	WF=300	WF=450	WF=600	WF=150	WF=300	WF=450	WF=600
2,5	242		304	0,1	280	Y16	130	Y12	150	1,0	151	96	69	53	158	103	75	58
										1,5	174	116	85	67	188	127	94	75
										2,0	199	138	103	82	U.S.	153	117	94
										2,5	U.S.	161	123	99	U.S.	183	141	115
			304	0,5	280	Y16	130	Y12	150	1,0	156	99	71	54	165	107	78	60
										1,5	183	121	89	69	199	134	99	79
										2,0	211	145	109	86	U.S.	164	124	99
										2,5	U.S.	170	130	104	U.S.	196	151	122
			304	1,0	280	Y16	130	Y12	150	1,0	170	108	77	59	182	117	85	66
										1,5	200	132	97	75	220	147	109	86
										2,0	231	158	118	93	U.S.	180	136	108
										2,5	U.S.	186	142	113	U.S.	215	165	133
			304	1,5	280	Y16	130	Y12	150	1,0	195	123	88	67	203	134	97	75
										1,5	228	150	110	85	250	167	124	97
										2,0	261	179	133	104	U.S.	208	153	122
										2,5	U.S.	208	158	126	U.S.	240	184	149
			304	2,0	280	Y16	130	Y12	150	1,0	222	140	100	76	237	152	110	85
										1,5	258	170	123	95	283	189	139	109
										2,0	293	200	149	117	U.S.	227	171	136
										2,5	U.S.	232	176	140	U.S.	267	205	165
			304	2,5	280	Y16	130	Y12	150	1,0	257	162	115	87	273	175	126	97
										1,5	295	194	141	109	322	215	158	124
										2,0	332	226	168	132	U.S.	256	192	153
										2,5	U.S.	260	197	156	U.S.	298	228	183
			309	3,0	300	Y16	130	Y16	300	1,0	296	187	133	101	315	202	145	112
										1,5	337	222	161	124	367	244	180	141
										2,0	376	256	190	149	U.S.	288	216	171
										2,5	U.S.	291	220	175	U.S.	333	254	204
			313	3,5	320	Y16	130	Y16	300	1,0	340	215	153	116	360	231	166	128
										1,5	383	252	183	141	416	278	203	159
										2,0	423	288	214	167	U.S.	323	242	192
										2,5	U.S.	325	246	195	U.S.	370	283	226
			318	4,0	340	Y16	120	Y16	300	1,0	388	246	175	133	410	262	189	146
										1,5	433	285	207	160	468	311	229	179
										2,0	474	323	240	188	U.S.	360	270	214
										2,5	U.S.	361	273	216	U.S.	410	313	250
			322	4,5	360	Y16	110	Y16	300	1,0	440	279	198	151	463	297	214	165
										1,5	486	320	233	179	524	349	256	200
										2,0	U.S.	360	267	209	U.S.	400	300	237
										2,5	U.S.	400	302	240	U.S.	452	344	275
			326	5,0	380	Y16	100	Y16	300	1,0	495	314	223	170	520	333	240	185
										1,5	543	358	260	201	583	388	285	223
										2,0	U.S.	400	297	232	U.S.	442	331	262
										2,5	U.S.	441	333	264	U.S.	496	375	302
			335	6,0	420	Y20	140	Y12	300	1,0	610	388	277	211	638	410	295	228
										1,5	661	436	318	245	U.S.	470	346	270
										2,0	U.S.	482	358	280	U.S.	529	396	313
										2,5	U.S.	526	397	315	U.S.	586	447	357
			344	7,0	460	Y20	130	Y16	300	1,0	726	463	330	252	757	487	351	271
										1,5	779	515	375	290	U.S.	553	406	317
										2,0	U.S.	564	419	328	U.S.	616	461	364
										2,5	U.S.	611	461	366	U.S.	677	516	412
			351	8,0	490	Y20	120	Y16	300	1,0	841	538	384	294	875	564	407	314
										1,5	896	594	433	335	U.S.	635	467	365
										2,0	U.S.	646	480	376	U.S.	703	526	416
										2,5	U.S.	695	526	417	U.S.	U.S.	585	467
			358	9,0	520	Y20	110	Y16	250	1,0	957	613	438	335	993	641	463	357
										1,5	1013	673	491	380	U.S.	717	528	412
										2,0	U.S.	728	541	424	U.S.	789	591	467
										2,5	U.S.	780	590	467	U.S.	U.S.	654	522
			364	10,0	550	Y20	110	Y16	250	1,0	1072	688	492	377	1111	718	519	401
										1,5	1130	752	549	425	U.S.	799	589	460
										2,0	U.S.	810	602	472	U.S.	875	656	519
										2,5	U.S.	864	654	518	U.S.	U.S.	722	577
3,0	255		322	0,1	300	Y16	120	Y16	250	1,5	171	114	85	66	184	125	93	74
										2,0	195	136	102	81	U.S.	151	116	93
										2,5	222	159	122	98	U.S.	181	140	114
										3,0	U.S.	184	144	117	U.S.	212	167	137
			322	0,5	300	Y16	120	Y16	250	1,5	212	141	103	80	231	155	116	91
										2,0	242	167	125	99	U.S.	188	142	114
										2,5	273	194	148	118	U.S.	222	171	139
			322	1,0	300	Y16	120	Y16	250	3,0	U.S.	223	173	140	U.S.	258	202	166
										1,5	245	163	119	92	266	179	133	105
										2,0	277	191	142	112	U.S.	214	162	129
										2,5	U.S.	220	167	134	U.S.	251	193	156
			322	1,5	300	Y16	120	Y16	250	3,0	U.S.	250	194	156	U.S.	U.S.	226	185
										1,5	282	187	137	106	306	205	152	119
										2,0	316	217	162	127	U.S.	243	184	146
										2,5	U.S.	248	188	150	U.S.	282	217	175
			322	2,0	300	Y16	120	Y16	250	3,0	U.S.	279	216	174	U.S.	U.S.	252	205
										1,5	322	214	156	121	349	234	173	136
										2,0	358	246	183	144	U.S.	274	207	165
										2,5	U.S.	278	211	168	U.S.	316	242	195
			326	2,5	320	Y16	120	Y16	250	3,0	U.S.	312	241	194	U.S.	U.S.	280	227
										1,5	368	244	178	138	397	266	196	154
										2,0	405	278	207	163	U.S.	309	233	185
			331	3,0	340	Y16	120	Y16	250	2,5	U.S.	312	237	188	U.S.	353	270	217
										3,0	U.S.	347	267	215	U.S.	U.S.	309	251
										1,5	417	277	202	156	448	301	222	174
			335	3,5	360	Y16	110	Y16	250	2,0	455	312	233	183	U.S.	346	261	207
										2,5	U.S.	348	264	210	U.S.	392	300	241
										3,0	U.S.	384	296	238	U.S.	U.S.	341	277
			342	4,0	390	Y16	100	Y16	250	1,5	469	312	228	176	503	337	249	195
										2,0	509	349	260	204	U.S.	386	290	230
										2,5	U.S.	387	293	233	U.S.	434	332	266
										3,0	U.S.	424	327	263	U.S.	U.S.	378	304
			346	4,5	410	Y20	150	Y16	250	1,5	525	349	255	198	561	377	278	218
										2,0	U.S.	388	289	227	U.S.	427	321	255
										2,5	U.S.	427	324	257	U.S.	477	365	293
										3,0	U.S.	466	359	288	U.S.	U.S.	410	332
			353	5,0	440	Y20	140	Y16	250	1,5	584	389	284	220	623	418	309	242
										2,0	U.S.	430	320	251	U.S.	471	354	281
										2,5	U.S.	470	356	283	U.S.	523	400	321
										3,0	U.S.	509	393	315	U.S.	U.S.	446	362
			362	6,0	480	Y20	120	Y16	250	1,5	712	475	347	269	U.S.	507	375	293
										2,0	U.S.	519	387	304	U.S.	564	424	336
										2,5	U.S.	561	426	338	U.S.	620	474	380
										3,0	U.S.	603	465	373	U.S.	U.S.	524	424
			373	7,0	530	Y20	110	Y16	250	1,5	845	565	414	321	U.S.	601	444	348
										2,0	U.S.	612	457	359	U.S.	662	498	395
										2,5	U.S.	657	499	396	U.S.	722	552	442
										3,0	U.S.	700	540	434	U.S.	U.S.	605	490
			382	8,0	570	Y20	100	Y16	250	1,5	979	655	481	373	U.S.	695	514	402
										2,0	U.S.	705	527	414	U.S.	760	572	453
										2,5	U.S.	752	571	454	U.S.	U.S.	629	504
										3,0	U.S.	797	615	494	U.S.	U.S.	685	555
			391	9,0	610	Y20	100	Y16	250	1,5	1111	745	547	426	U.S.	788	583	457
										2,0	U.S.	798	597	469	U.S.	857	645	511
										2,5	U.S.	847	644	512	U.S.	U.S.	706	566
										3,0	U.S.	894	690	554	U.S.	U.S.	766	620
			397	10,0	640	Y20	90	Y16	250	1,5	1242	835	614	478	U.S.	881	653	512
										2,0	U.S.	890	666	525	U.S.	954	719	570
										2,5	U.S.	941	716	570	U.S.	U.S.	783	627
										3,0	U.S.	990	764	615	U.S.	U.S.	846	384

CLEAR SPAN S	ABUT SEATING		FILL HEIGHT HF m	DECK THICK-NESS D mm	DECK REINFORCEMENT				CULVERT HEIGHT H3	MAXIMUM ABUTMENT TOE PRESURE kPa.							
					MAIN		TRANSVERSE			EQUIV FLUID PRESS. 5,6 kPa				EQUIV FLUID PRESS. 7,8 kPa.			
	C1	C2			DIAM	SPACING	DIAM	SPACING		WF=150	WF=300	WF=450	WF=600	WF=150	WF=300	WF=450	WF=600
3,5	267		338	0,1	320	Y16	110	Y16	250	1,5	169	114	85	66	182	124	93	74
										2,0	193	135	102	81	U.S.	151	115	93
										2,5	220	158	122	98	U.S.	179	140	114
										3,0	U.S.	183	143	117	U.S.	211	166	137
										3,5	U.S.	209	166	137	U.S.	U.S.	195	162
			338	0,5	320	Y16	120	Y16	250	1,5	193	130	96	75	209	142	106	84
										2,0	221	154	116	92	U.S.	171	131	105
										2,5	249	178	137	110	U.S.	203	157	128
										3,0	U.S.	205	160	130	U.S.	236	186	153
										3,5	U.S.	233	184	151	U.S.	U.S.	217	180
			338	1,0	320	Y16	130	Y16	250	1,5	224	150	110	86	242	164	122	97
										2,0	253	175	132	104	U.S.	196	149	119
										2,5	U.S.	202	155	124	U.S.	230	178	144
										3,0	U.S.	230	179	145	U.S.	266	209	171
										3,5	U.S.	260	205	168	U.S.	U.S.	241	199
			338	1,5	320	Y16	120	Y16	250	1,5

TABLE I

CLEAR SPAN S	ABUT SEATING		FILL HEIGHT HF m	DECK THICK-NESS D mm	DECK REINFORCEMENT				CULVERT HEIGHT H3	MAXIMUM ABUTMENT TOE PRESSURE kPa							
					MAIN		TRANSVERSE			EQUIV FLUID PRESS. 5,6 kPa				EQUIV FLUID PRESS. 7,8 kPa			
	C1	C2			DIA.	SPACING	DIA.	SPACING		WF=150	WF=300	WF=450	WF=600	WF=150	WF=300	WF=450	WF=600
4.0	280	371	2,5	410	Y20	150	Y16	250	2,0	489	284	214	189	U.S.	312	237	189
									2,5	U.S.	316	241	193	U.S.	352	271	219
									3,0	U.S.	348	270	218	U.S.	388	301	251
									3,5	U.S.	380	299	245	U.S.	U.S.	345	284
									4,0	U.S.	413	330	272	U.S.	U.S.	384	319
		378	3,0	440	Y20	140	Y16	250	2,0	462	322	242	191	U.S.	351	266	213
									2,5	U.S.	354	271	217	U.S.	393	303	245
									3,0	U.S.	387	301	243	U.S.	U.S.	341	278
									3,5	U.S.	421	331	271	U.S.	U.S.	381	313
									4,0	U.S.	U.S.	363	299	U.S.	U.S.	421	349
		382	3,5	460	Y20	130	Y16	250	2,0	519	361	271	214	U.S.	393	298	238
									2,5	U.S.	395	302	241	U.S.	437	337	272
									3,0	U.S.	429	333	269	U.S.	U.S.	377	307
									3,5	U.S.	464	365	298	U.S.	U.S.	418	343
									4,0	U.S.	U.S.	397	327	U.S.	U.S.	U.S.	381
		389	4,0	490	Y20	120	Y16	250	2,0	U.S.	403	303	239	U.S.	437	331	264
									2,5	U.S.	438	335	268	U.S.	483	372	300
									3,0	U.S.	473	367	297	U.S.	U.S.	414	337
									3,5	U.S.	509	400	327	U.S.	U.S.	456	375
									4,0	U.S.	U.S.	434	357	U.S.	U.S.	U.S.	414
		396	4,5	520	Y20	110	Y16	250	2,0	U.S.	446	336	265	U.S.	483	366	292
									2,5	U.S.	483	369	295	U.S.	531	409	329
									3,0	U.S.	519	403	325	U.S.	U.S.	452	368
									3,5	U.S.	555	437	356	U.S.	U.S.	496	407
									4,0	U.S.	U.S.	471	388	U.S.	U.S.	U.S.	448
		402	5,0	550	Y20	110	Y20	300	2,0	U.S.	492	370	292	U.S.	531	402	320
									2,5	U.S.	530	405	324	U.S.	580	447	360
									3,0	U.S.	567	440	355	U.S.	U.S.	492	400
									3,5	U.S.	604	475	387	U.S.	U.S.	537	441
									4,0	U.S.	U.S.	510	420	U.S.	U.S.	U.S.	483
		416	6,0	610	Y20	100	Y20	300	2,0	U.S.	588	443	350	U.S.	631	479	381
									2,5	U.S.	628	481	384	U.S.	684	527	424
									3,0	U.S.	667	518	418	U.S.	U.S.	575	468
									3,5	U.S.	U.S.	555	453	U.S.	U.S.	623	511
									4,0	U.S.	U.S.	592	487	U.S.	U.S.	U.S.	556
		427	7,0	660	Y25	140	Y20	300	2,0	U.S.	693	522	413	U.S.	740	561	447
									2,5	U.S.	734	562	450	U.S.	795	613	493
									3,0	U.S.	775	602	486	U.S.	U.S.	664	540
									3,5	U.S.	U.S.	641	522	U.S.	U.S.	715	587
									4,0	U.S.	U.S.	679	559	U.S.	U.S.	U.S.	634
		440	8,0	720	Y25	130	Y20	300	2,0	U.S.	805	607	481	U.S.	856	650	518
									2,5	U.S.	848	650	520	U.S.	U.S.	705	567
									3,0	U.S.	889	691	559	U.S.	U.S.	759	617
									3,5	U.S.	U.S.	732	597	U.S.	U.S.	812	666
									4,0	U.S.	U.S.	772	635	U.S.	U.S.	U.S.	716
		451	9,0	770	Y25	120	Y20	300	2,0	U.S.	919	694	550	U.S.	974	740	590
									2,5	U.S.	963	739	592	U.S.	U.S.	798	643
									3,0	U.S.	1005	782	632	U.S.	U.S.	855	695
									3,5	U.S.	U.S.	824	673	U.S.	U.S.	U.S.	747
									4,0	U.S.	U.S.	866	713	U.S.	U.S.	U.S.	799
		462	10,0	820	Y25	110	Y20	300	2,0	U.S.	1032	781	619	U.S.	1091	830	662
									2,5	U.S.	1078	828	663	U.S.	U.S.	891	718
									3,0	U.S.	U.S.	873	706	U.S.	U.S.	950	773
									3,5	U.S.	U.S.	917	748	U.S.	U.S.	U.S.	828
									4,0	U.S.	U.S.	959	790	U.S.	U.S.	U.S.	882
		372	0,1	360	Y16	100	Y16	250	2,5	219	159	123	100	U.S.	179	140	115
									3,0	U.S.	183	144	118	U.S.	210	167	138
									3,5	U.S.	209	167	138	U.S.	U.S.	195	163
									4,0	U.S.	237	191	159	U.S.	U.S.	226	189
									4,5	U.S.	265	216	182	U.S.	U.S.	257	218
		372	0,5	360	Y16	100	Y16	250	2,5	260	188	145	117	U.S.	212	165	134
									3,0	U.S.	214	168	137	U.S.	244	193	159
									3,5	U.S.	241	192	158	U.S.	U.S.	224	186
									4,0	U.S.	270	217	180	U.S.	U.S.	255	214
									4,5	U.S.	299	244	204	U.S.	U.S.	289	244
		376	1,0	380	Y16	100	Y16	250	2,5	U.S.	220	169	136	U.S.	246	191	156
									3,0	U.S.	247	193	157	U.S.	281	222	182
									3,5	U.S.	275	218	180	U.S.	U.S.	254	210
									4,0	U.S.	305	245	203	U.S.	U.S.	287	240
									4,5	U.S.	336	273	228	U.S.	U.S.	U.S.	271
		381	1,5	400	Y16	100	Y16	250	2,5	U.S.	255	196	158	U.S.	285	221	179
									3,0	U.S.	284	222	180	U.S.	322	253	207
									3,5	U.S.	314	246	204	U.S.	U.S.	287	237
									4,0	U.S.	344	276	228	U.S.	U.S.	322	268
									4,5	U.S.	U.S.	305	254	U.S.	U.S.	U.S.	301
		388	2,0	430	Y16	90	Y16	250	2,5	U.S.	294	225	181	U.S.	326	253	205
									3,0	U.S.	324	252	205	U.S.	U.S.	287	234
									3,5	U.S.	354	280	230	U.S.	U.S.	322	266
									4,0	U.S.	386	309	256	U.S.	U.S.	359	299
									4,5	U.S.	U.S.	339	282	U.S.	U.S.	U.S.	333
		392	2,5	450	Y20	130	Y16	250	2,5	U.S.	334	257	206	U.S.	370	286	231
									3,0	U.S.	366	285	231	U.S.	U.S.	322	263
									3,5	U.S.	397	314	257	U.S.	U.S.	359	296
									4,0	U.S.	430	344	284	U.S.	U.S.	397	330
									4,5	U.S.	U.S.	374	312	U.S.	U.S.	U.S.	366
		401	3,0	490	Y20	120	Y16	250	2,5	U.S.	376	288	231	U.S.	414	320	259
									3,0	U.S.	408	318	257	U.S.	U.S.	358	292
									3,5	U.S.	441	348	285	U.S.	U.S.	396	327
									4,0	U.S.	U.S.	379	323	U.S.	U.S.	436	362
									4,5	U.S.	U.S.	410	342	U.S.	U.S.	U.S.	399
		408	3,5	520	Y20	110	Y16	250	2,5	U.S.	419	321	257	U.S.	460	356	287
									3,0	U.S.	452	352	285	U.S.	U.S.	395	322
									3,5	U.S.	486	384	314	U.S.	U.S.	435	358
									4,0	U.S.	U.S.	415	343	U.S.	U.S.	U.S.	395
									4,5	U.S.	U.S.	448	373	U.S.	U.S.	U.S.	434
		414	4,0	550	Y20	110	Y16	250	2,5	U.S.	464	356	285	U.S.	508	393	317
									3,0	U.S.	499	388	314	U.S.	U.S.	434	354
									3,5	U.S.	533	421	344	U.S.	U.S.	475	392
									4,0	U.S.	U.S.	453	374	U.S.	U.S.	U.S.	430
									4,5	U.S.	U.S.	487	405	U.S.	U.S.	U.S.	469
		420	4,5	580	Y20	100	Y16	250	2,5	U.S.	511	392	314	U.S.	558	431	348
									3,0	U.S.	547	426	345	U.S.	U.S.	474	386
									3,5	U.S.	582	459	375	U.S.	U.S.	517	425
									4,0	U.S.	U.S.	493	406	U.S.	U.S.	U.S.	465
									4,5	U.S.	U.S.	527	438	U.S.	U.S.	U.S.	506
		428	5,0	610	Y25	150	Y20	300	2,5	U.S.	560	430	344	U.S.	609	471	380
									3,0	U.S.	596	464	376	U.S.	U.S.	515	420
									3,5	U.S.	632	499	408	U.S.	U.S.	560	460
									4,0	U.S.	U.S.	533	440	U.S.	U.S.	U.S.	502
									4,5	U.S.	U.S.	568	472	U.S.	U.S.	U.S.	543
		441	6,0	670	Y25	140	Y20	300	2,5	U.S.	663	509	408	U.S.	717	554	447
									3,0	U.S.	700	546	442	U.S.	U.S.	602	490
									3,5	U.S.	U.S.	582	476	U.S.	U.S.	649	534
									4,0	U.S.	U.S.	618	510	U.S.	U.S.	U.S.	577
									4,5	U.S.	U.S.	654	544	U.S.	U.S.	U.S.	622
		454	7,0	730	Y25	120	Y20	300	2,5	U.S.	772	594	476	U.S.	832	643	519
									3,0	U.S.	811	632	512	U.S.	U.S.	693	565
									3,5	U.S.	U.S.	670	548	U.S.	U.S.	749	611
									4,0	U.S.	U.S.	U.S.	708	584	U.S.	U.S.	657
									4,5	U.S.	U.S.	746	620	U.S.	U.S.	U.S.	704
		468	8,0	790	Y25	110	Y20	300	2,5	U.S.	889	684	549	U.S.	U.S.	738	595
									3,0	U.S.	929	724	587	U.S.	U.S.	790	644
									3,5	U.S.	U.S.	764	625	U.S.	U.S.	843	693
									4,0	U.S.	U.S.	803	662	U.S.	U.S.	U.S.	742
									4,5	U.S.	U.S.	842	700	U.S.	U.S.	U.S.	790
		479	9,0	840	Y25	110	Y20	300	2,5	U.S.	1012	780	626	U.S.	U.S.	837	676
									3,0	U.S.	1053	822	667	U.S.	U.S.	893	728
									3,5	U.S.	U.S.	863	706	U.S.	U.S.	U.S.	779
									4,0	U.S.	U.S.	903	745	U.S.	U.S.	U.S.	830
									4,5	U.S.	U.S.	943	784	U.S.	U.S.	U.S.	881

TABLE I

CLEAR SPAN S	ABUT SEATING		FILL HEIGHT HF m	DECK THICK-NESS D mm	DECK REINFORCEMENT				CULVERT HEIGHT H3	MAXIMUM ABUTMENT TOE PRESSURE kPa							
					MAIN		TRANSVERSE			EQUIV FLUID PRESS. 5,6 kPa				EQUIV FLUID PRESS. 7,8 kPa			
	C1	C2			DIA.	SPACING	DIA.	SPACING		WF=150	WF=300	WF=450	WF=600	WF=150	WF=300	WF=450	WF=600
5.0	305	492	10,0	900	Y25	100	Y20	300	2,5	U.S.	1197	877	785	U.S.	U.S.	938	758
									3,0	U.S.	U.S.	921	747	U.S.	U.S.	996	812
									3,5	U.S.	U.S.	963	788	U.S.	U.S.	U.S.	866
									4,0	U.S.	U.S.	1004	829	U.S.	U.S.	U.S.	919
									4,5	U.S.	U.S.	1045	869	U.S.	U.S.	U.S.	972
		387	0,1	370	Y20	140	Y16	250	2,5	219	160	124	101	U.S.	180	141	116
									3,0	U.S.	184	146	119	U.S.	210	168	139
									3,5	U.S.	210	168	139	U.S.	U.S.	169	163
									4,0	U.S.	237	192	160	U.S.	U.S.	226	190
									4,5	U.S.	265	217	182	U.S.	U.S.	258	218
		392	0,5	390	Y20	150	Y16	250	2,5	266	193	150	121	U.S.	216	169	138
									3,0	U.S.	219	172	141	U.S.	249	197	163
									3,5	U.S.	246	196	162	U.S.	U.S.	227	189
									4,0	U.S.	274	221	184	U.S.	U.S.	259	217
									4,5	U.S.	303	247	207	U.S.	U.S.	292	247
		396	1,0	410	Y20	150	Y16	250	2,5	U.S.	228	176	142	U.S.	255	198	161
									3,0	U.S.	255	200	163	U.S.	289	228	188
									3,5	U.S.	284	225	186	U.S.	U.S.	260	216
									4,0	U.S.	313	252	209	U.S.	U.S.	293	245
									4,5	U.S.	343	279	234	U.S.	U.S.	277	U.S.
		403	1,5	440	Y20	140	Y16	250	2,5	U.S.	267	206	166	U.S.	296	230	187
									3,0	U.S.	296	231	188	U.S.	333	262	215
									3,5	U.S.	325	258	212	U.S.	U.S.	296	245
									4,0	U.S.	355	285	236	U.S.	U.S.	331	276
									4,5	U.S.	U.S.	313	262	U.S.	U.S.	308	U.S.
		409	2,0	470	Y20	130	Y16	250	2,5	U.S.	309	238	191	U.S.	341	265	215
									3,0	U.S.	338	264	215	U.S.	U.S.	298	244
									3,5	U.S.	369	292	240	U.S.	U.S.	333	276
									4,0	U.S.	399	320	265	U.S.	U.S.	370	308
									4,5	U.S.	U.S.	350	292	U.S.	U.S.	U.S.	342
		416	2,5	500	Y20	120	Y16	250	2,5	U.S.	352	271	218	U.S.	387	300	243
									3,0	U.S.	383	299	243	U.S.	U.S.	336	275
									3,5	U.S.	414	328	269	U.S.	U.S.	372	308
									4,0	U.S.	446	357	296	U.S.	U.S.	410	342
									4,5	U.S.	U.S.	387	323	U.S.	U.S.	U.S.	376
		423	3,0	530	Y20	110	Y16	250	2,5	U.S.	397	306	246	U.S.	435	337	273
									3,0	U.S.	429	335	272	U.S.	U.S.	374	306
									3,5	U.S.	461	365	299	U.S.	U.S.	412	340
									4,0	U.S.	U.S.	395	327	U.S.	U.S.	451	377
									4,5	U.S.	U.S.	426	355	U.S.	U.S.	U.S.	412
		432	3,5	570	Y20	100	Y20	300	2,5	U.S.	443	341	274	U.S.	483	374	303
									3,0	U.S.	476	371	301	U.S.	U.S.	413	338
									3,5	U.S.	508	402	329	U.S.	U.S.	453	374
									4,0	U.S.	U.S.	434	358	U.S.	U.S.	U.S.	410
									4,5	U.S.	U.S.	465	388	U.S.	U.S.	U.S.	448
		438	4,0	600	Y25	150	Y20	300	2,5	U.S.	491	378	303	U.S.	533	413	334
									3,0	U.S.	524	409	332	U.S.	U.S.	454	371
									3,5	U.S.	558	441	361	U.S.	U.S.	495	408
									4,0	U.S.	U.S.	473	391	U.S.	U.S.	U.S.	446
									4,5	U.S.	U.S.	506	422	U.S.	U.S.	U.S.	485
		447	4,5	640	Y25	140	Y20	300	2,5	U.S.	540	416	334	U.S.	585	454	367
									3,0	U.S.	574	448	364	U.S.	U.S.	496	405
									3,5	U.S.	608	481	394	U.S.	U.S.	538	444
									4,0	U.S.	U.S.	514	425	U.S.	U.S.	U.S.	483
									4,5	U.S.	U.S.	548	456	U.S.	U.S.	U.S.	523
		454	5,0	670	Y25	140	Y20	300	2,5	U.S.	591	455	366	U.S.	639	495	401
									3,0	U.S.	626	489	397	U.S.	U.S.	539	440
									3,5	U.S.	U.S.	523	428	U.S.	U.S.	583	480
									4,0	U.S.	U.S.	557	460	U.S.	U.S.	U.S.	521
									4,5	U.S.	U.S.	591	492	U.S.	U.S.	U.S.	562
		467	6,0	730	Y25	120	Y20	300	2,5	U.S.	698	538	432	U.S.	751	582	471
									3,0	U.S.	734	574	466	U.S.	U.S.	629	513
									3,5	U.S.	U.S.	609	499	U.S.	U.S.	675	556
									4,0	U.S.	U.S.	645	533	U.S.	U.S.	U.S.	599
									4,5	U.S.	U.S.	680	567	U.S.	U.S.	U.S.	643
		483	7,0	800	Y25	110	Y20	300	2,5	U.S.	811	626	503	U.S.	869	674	545
									3,0	U.S.	848	663	539	U.S.	U.S.	723	591
									3,5	U.S.	U.S.	701	574	U.S.	U.S.	772	636
									4,0	U.S.	U.S.	738	609	U.S.	U.S.	U.S.	682
									4,5	U.S.	U.S.	774	645	U.S.	U.S.	U.S.	728
		496	8,0	860	Y25	100	Y20	300	2,5	U.S.	931	719	579	U.S.	U.S.	771	624
									3,0	U.S.	969	758	616	U.S.	U.S.	823	672
									3,5	U.S.	U.S.	797	653	U.S.	U.S.	874	720
									4,0	U.S.	U.S.	835	690	U.S.	U.S.	U.S.	768
									4,5	U.S.	U.S.	873	727	U.S.	U.S.	U.S.	816
		509	9,0	920	Y25	100	Y25	300	2,5	U.S.	1057	818	659	U.S.	U.S.	874	708
									3,0	U.S.	U.S.	859	698	U.S.	U.S.	928	758
									3,5	U.S.	U.S.	899	737	U.S.	U.S.	981	809
									4,0	U.S.	U.S.	938	776	U.S.	U.S.	U.S.	859
									4,5	U.S.	U.S.	976	814	U.S.	U.S.	U.S.	909
		523	10,0	980	Y25	100	Y25	300	2,5	U.S.	1190	922	743	U.S.	U.S.	981	795
									3,0	U.S.	U.S.	964	784	U.S.	U.S.	1038	848
									3,5	U.S.	U.S.	1005	825	U.S.	U.S.	U.S.	901
									4,0	U.S.	U.S.	1045	865	U.S.	U.S.	U.S.	953
									4,5	U.S.	U.S.	U.S.	904	U.S.	U.S.	U.S.	1005
5.5	317	406	0,1	400	Y20	140	Y16	250	2,5	220	161	126	102	U.S.	181	142	117
									3,0	U.S.	185	147	120	U.S.	211	169	140
									3,5	U.S.	211	169	140	U.S.	244	197	164
									4,0	U.S.	238	193	161	U.S.	U.S.	227	191
									4,5	U.S.	266	218	183	U.S.	U.S.	258	219
		410	0,5	420	Y20	140	Y16	250	2,5	273	199	154	125	U.S.	221	173	142
									3,0	U.S.	224	176	144	U.S.	253	201	166
									3,5	U.S.	251	200	165	U.S.	U.S.	231	193
									4,0	U.S.	279	225	188	U.S.	U.S.	263	220
									4,5	U.S.	308	251	211	U.S.	U.S.	296	250
		417	1,0	450	Y20	140	Y16	250	2,5	U.S.	238	184	149	U.S.	263	206	268
									3,0	U.S.	254	208	169	U.S.	297	235	194
									3,5	U.S.	292	233	192	U.S.	U.S.	267	222
									4,0	U.S.	321	259	215	U.S.	U.S.	300	251
									4,5	U.S.	351	286	239	U.S.	U.S.	334	282
		424	1,5	480	Y20	130	Y16	250	2,5	U.S.	280	216	174	U.S.	308	240	195
									3,0	U.S.	308	241	197	U.S.	344	272	223
									3,5	U.S.	336	267	220	U.S.	U.S.	305	253
									4,0	U.S.	366	294	244	U.S.	U.S.	339	284
									4,5	U.S.	U.S.	322	270	U.S.	U.S.	U.S.	316
		430	2,0	510	Y20	120	Y16	250	2,5	U.S.	324	250	202	U.S.	355	277	225
									3,0	U.S.	353	277	225	U.S.	393	310	254
									3,5	U.S.	383	304	250	U.S.	U.S.	345	285
									4,0	U.S.	413	332	275	U.S.	U.S.	381	318
									4,5	U.S.	U.S.	361	302	U.S.	U.S.	U.S.	351
		439	2,5	550	Y20	110	Y20	300	2,5	U.S.	371	286	230	U.S.	405	315	255
									3,0	U.S.	401	314	255	U.S.	U.S.	350	287
									3,5	U.S.	431	342	281	U.S.	U.S.	386	319
									4,0	U.S.	U.S.	371	308	U.S.	U.S.	423	353
									4,5	U.S.	U.S.	401	335	U.S.	U.S.	U.S.	388
		446	3,0	580	Y20	100	Y20	300	2,5	U.S.	419	323	260	U.S.	455	354	287
									3,0	U.S.	450	352	286	U.S.	U.S.	391	320
									3,5	U.S.	481	381	313	U.S.	U.S.	428	354
									4,0	U.S.	U.S.	411	341	U.S.	U.S.	467	389
									4,5	U.S.	U.S.	442	369	U.S.	U.S.	U.S.	425
		455	3,5	620	Y25	150	Y20	300	2,5	U.S.	467	361	290	U.S.	506	394	319
									3,0	U.S.	499	391	318	U.S.	U.S.	432	354
									3,5	U.S.	531	421	346	U.S.	U.S.	471	389
									4,0	U.S.	U.S.	452	374	U.S.	U.S.	511	425
									4,5	U.S.	U.S.	483	403	U.S.	U.S.	U.S.	463
		464	4,0	660	Y25	140	Y20	300	2,5	U.S.	517	399	322	U.S.	559	434	352
									3,0	U.S.	550	430	350	U.S.	U.S.	474	388
									3,5	U.S.	582	462	379	U.S.	U.S.	515	425
									4,0	U.S.	U.S.	494	409	U.S.	U.S.	U.S.	463
									4,5	U.S.	U.S.	526	439	U.S.	U.S.	U.S.	501

TABLE I

CLEAR SPAN S	ABUT SEATING		FILL HEIGHT HF m	DECK THICK-NESS D mm	DECK REINFORCEMENT				CULVERT HEIGHT H3	MAXIMUM ABUTMENT TOE PRESSURE kPa							
					MAIN		TRANSVERSE			EQUIV FLUID PRESS. 5,6 kPa				EQUIV FLUID PRESS. 7,8 kPa			
	C1	C2			DIA.	SPACING	DIA.	SPACING		WF=150	WF=300	WF=450	WF=600	WF=150	WF=300	WF=450	WF=600
6.0	330	470	4,5	690	Y25	130	Y20	300	2,5	U.S.	589	439	354	U.S.	613	477	386
									3,0	U.S.	602	472

TABLE 3

WINGWALL REINFORCEMENT			
BAR	H3 < 3.5m	H3 > 3.5m	H3 > 5m
①	Y16 - 300	Y20 - 300	
②	Y12 - 300	Y16 - 300	SPECIAL DESIGN
③	Y12 - 300	Y16 - 300	
④	Y12 - 300	Y12 - 300	

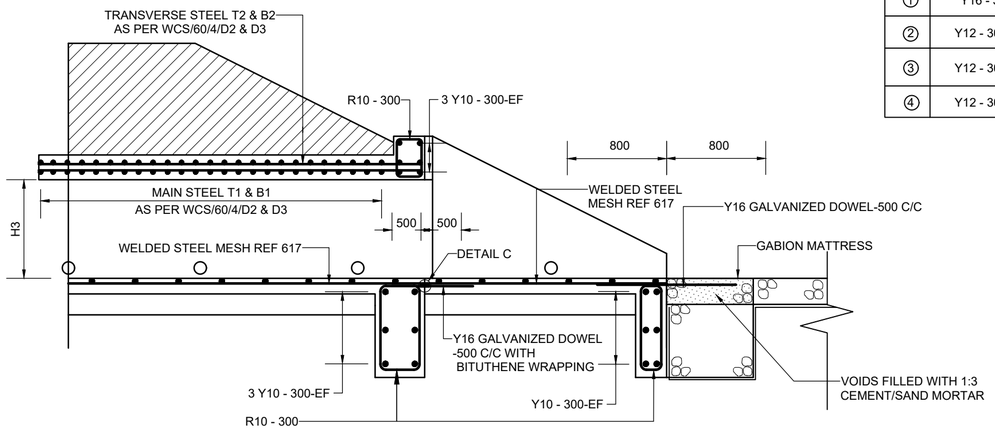

SECTION A-A

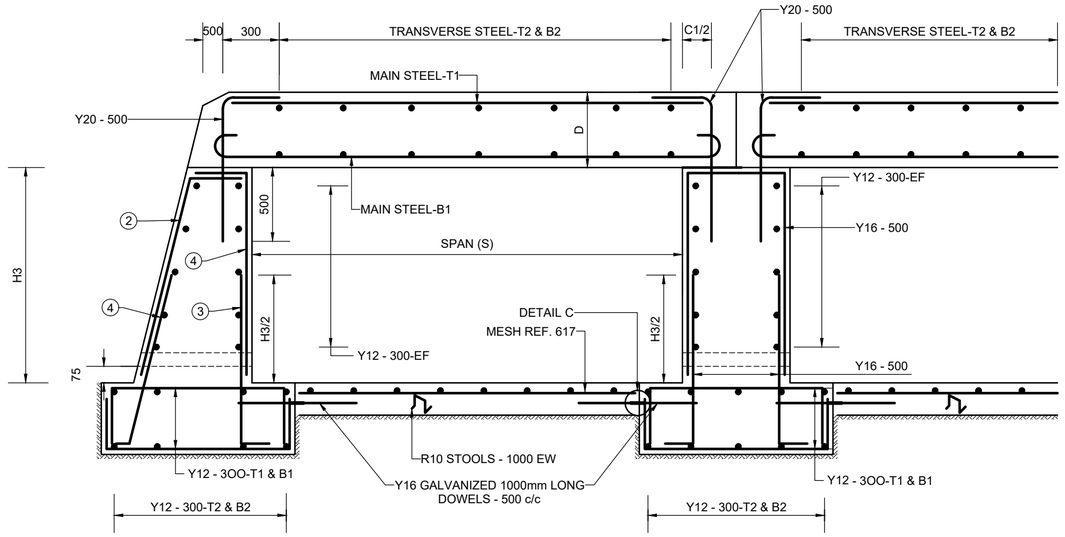

SECTION B-B

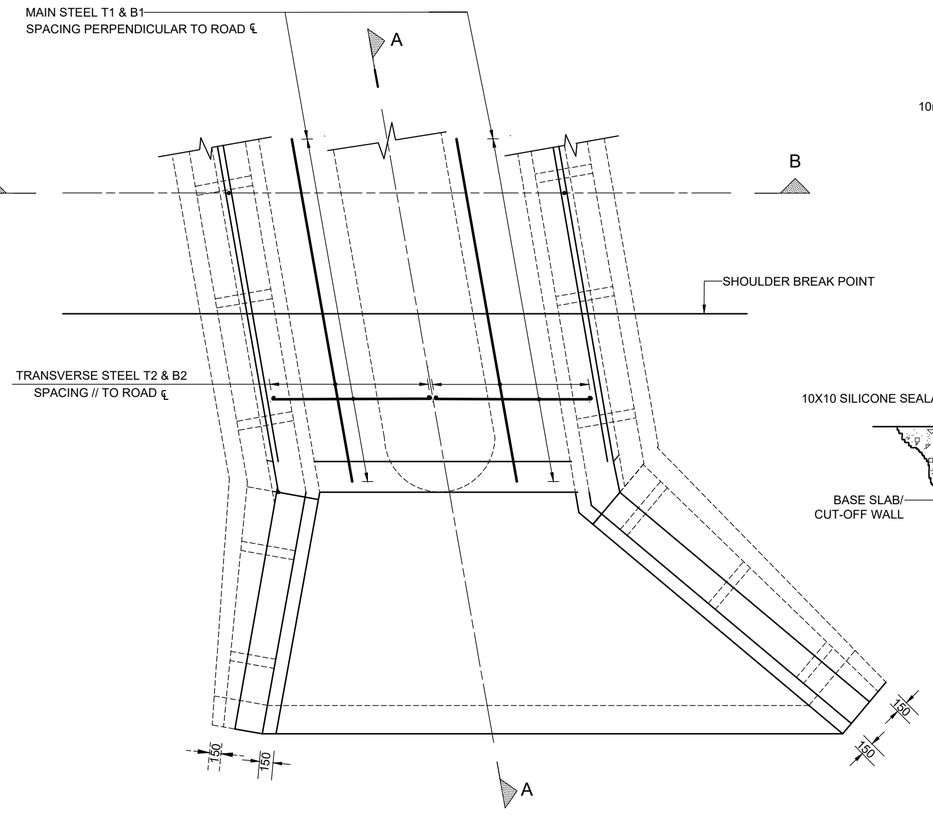

PART PLAN OF DECK REINFORCEMENT

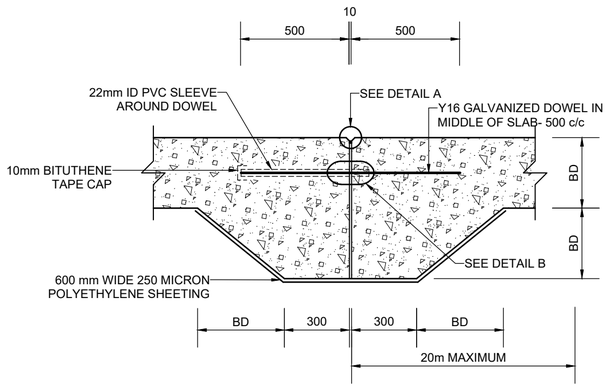

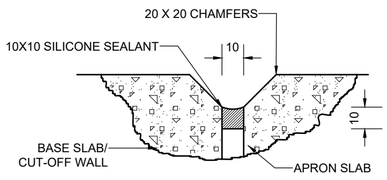

DETAIL A

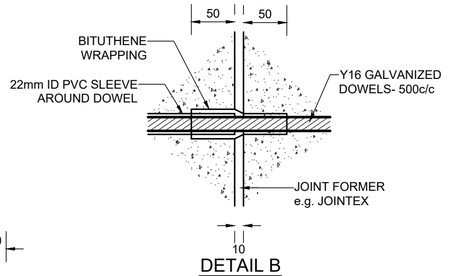

DETAIL B

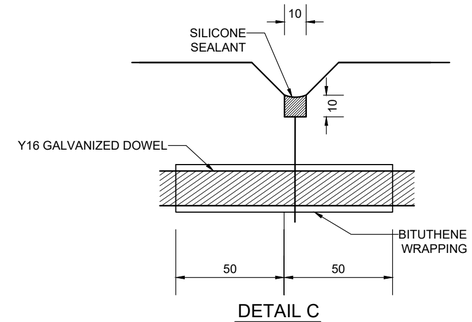

DETAIL C

NOTES :

1. MATERIAL SPECIFICATIONS: IN-SITU CONCRETE

   - CONCRETE CLASS : 30/20 OR AS SPECIFIED
   - MINIMUM CEMENTITIOUS CONTENT : 300 kg/m THROUGHOUT.
   - GABIONS AND GEOTEXTILE : AS SPECIFIED ON SCOUR PROTECTION DWG No. WCS/51/1/D1.
   - STEEL REINFORCEMENT : HIGH TENSILE STEEL 450 MPa.
   - WELDED STEEL MESH : HIGH TENSILE STEEL 485 MPa.
   - WELDED STEEL MESH REINFORCEMENT TO CONFORM TO SANS 1024.

2. ALL EXPOSED SHARP EDGES TO HAVE 20 x 20mm CHAMFERS.

3. MINIMUM CONCRETE COVER = 75mm FOR FACES CAST AGAINST EARTH
   50mm ELSEWHERE.

4. HEADWALL NOT TO EXTEND 50mm MAXIMUM ABOVE SHOULDER BREAK POINT.

5. Y12 GALVANIZED 1600mm LONG DOWELS IN APRON SLAB TO BE BENT TO AVOID OBSTRUCTING PLACEMENT OF GABIONS. Y12 DOWELS THEN TO BE BENT HORIZONTALLY AND COATED WITH ABECOTE 352 OR SIMILAR BEFORE PLACEMENT OF MATTRESS.

6. THE NECESSITY AS WELL AS THE EXTENT OF GABION MATTRESS PROTECTION TO BE SPECIFIED BY THE ENGINEER.

7. CUT-OFF WALLS TO FORM AN INTEGRAL PART OF APRON AND BASE SLABS.

8. CUT-OFF WALL DEPTHS, BASE SLAB DEPTHS AND BASE SLAB STEEL REINFORCEMENT AS WELL AS PERMISSIBLE FILL HEIGHT (HF) TO BE SPECIFIED BY THE ENGINEER.

9. THE FOUNDING LEVEL MUST BE APPROVED BY THE ENGINEER. ENSUITABLE FOUNDING MATERIAL MUST BE EXCAVATED AND REPLACED BY MASS CONCRETE (CLASS 25/28) OR SOILCRETE (5% CEMENT) AS DIRECTED BY THE ENGINEER.

THIS DRAWING TO BE READ IN CONJUNCTION WITH DWG. No. WCS/60/4/D1, WCS/60/4/D2 AND WCS/60/4/D3.

LEGEND FOR REINFORCEMENT
T2 - BOTTOM LAYER OF TOP REINFORCEMENT
B2 - TOP LAYER OF BOTTOM REINFORCEMENT
EF - EACH FACE
EW - EACH WAY

THIS PLAN IS TO BE USED FOR EXTENDING OF OLD STRUCTURES ONLY

No.	DATE	ADDITIONS AND AMENDMENTS
0	OCT - 2023	ORIGINAL VERSION

STANDARD PLANS

WESTERN CAPE GOVERNMENT
DEPARTMENT OF INFRASTRUCTURE
TRANSPORT INFRASTRUCTURE BRANCH

INSITU CAST CONCRETE RECTANGULAR PORTAL CULVERTS

REINFORCEMENT DETAILS

SCALE : N.T.S.

A2 ORIGINAL

INDEX NO. WCS/60/4/D4

PLAN NO. SHEET 4 OF 4

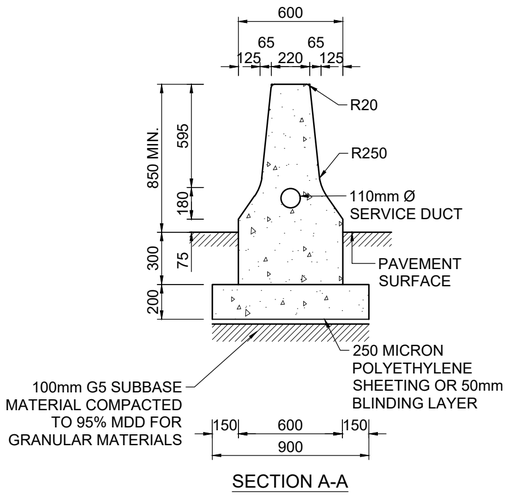

SECTION A-A

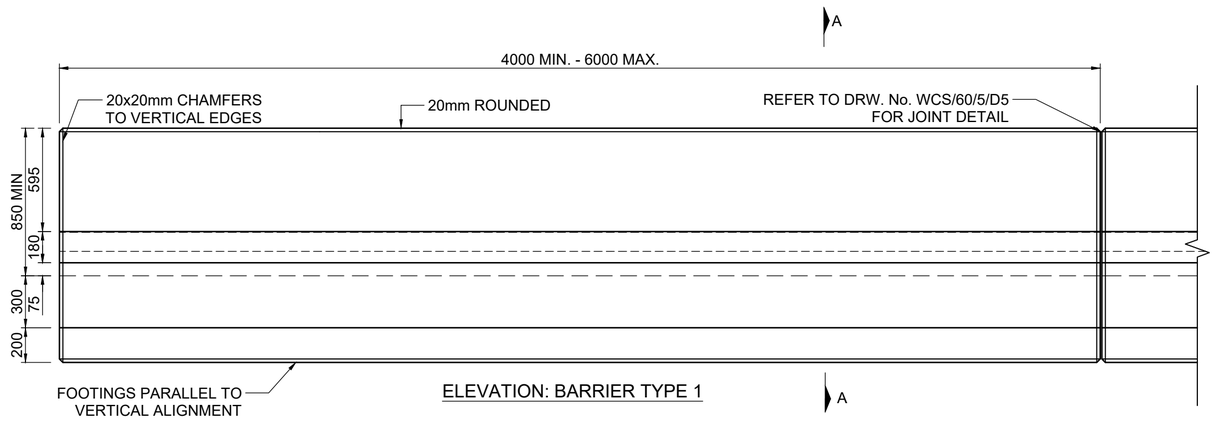

ELEVATION: BARRIER TYPE 1

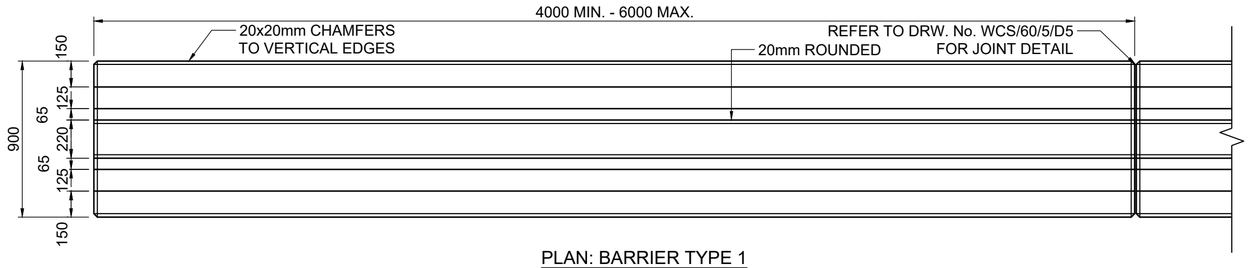

PLAN: BARRIER TYPE 1

NOTES :

1. MATERIAL AND FINISHES

   THE MATERIAL AND WORK SHALL COMPLY WITH THE RELEVANT CLAUSES OF SERIES 6000 AND 8000 OF THE STANDARD SPECIFICATIONS, THE PROJECT SPECIFICATIONS AND SHALL INCLUDE THE FOLLOWING:

1.1. CONCRETE CLASS

   1.1.1. DOUBLE MEDIAN BARRIER (MPa/mm) : 30/20

1.2. STEEL REINFORCING BARS SHALL COMPLY WITH SANS 920:1985 HIGH YIELD BARS : MIN YIELD STRESS 450 MPa. MILD STEEL BARS : MIN YIELD STRESS 250 MPa

1.3. MINIMUM CONCRETE COVER TO REINFORCEMENT : 40mm

1.4. SURFACE FINISHES:
- CLASS F3 - STEEL SHUTTER FINISH
- CLASS U3 - STEEL TROWEL FINISH

2. MANUFACTURE:

2.1. THE PRECAST PARAPET UNITS SHALL CONFORM TO ALL DETAILS, INCLUDING DIMENSIONAL TOLERANCES SHOWN ON THE DETAIL DRAWINGS.

3. TOLERANCES:

   THE SHUTTER SHALL BE MANUFACTURED TO TOLERANCES THAT WILL ENSURE THAT UNITS AFTER CASTING COMPLY WITH THE FOLLOWING TOLERANCES.

3.1. DIMENSIONS:
TRANSVERSAL : +5mm - 0mm
LONGITUDINAL : +0mm - 5mm

3.2. SURFACE IRREGULARITIES AND WARP MEASURED BY MEANS OF A STRAIGHT EDGE:
TRANSVERSE : -2mm
LONGITUDINAL : -3mm OVER LENGTH OF UNIT

3.3. SQUARENESS OF ENDS:
NO DIMENSIONS SHALL DEVIATE BY MORE THAN 3mm FROM THE THEORETICAL SQUARE PLANE CORRESPONDING TO THE FURTHEST PROJECTING CONCRETE.

4. SEGMENT LENGTHS TO SUITE ROAD ALIGNMENT

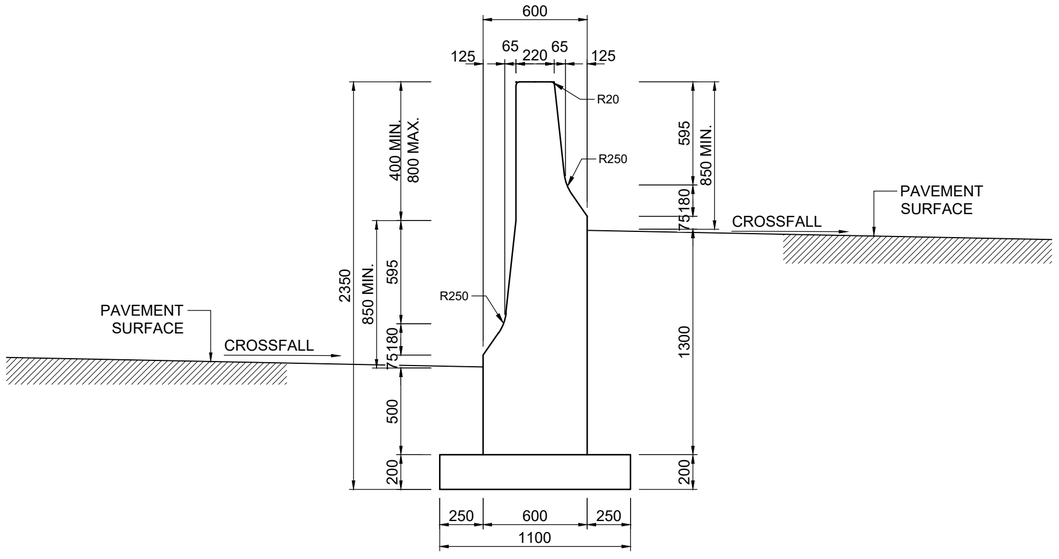

400mm - 800mm ROAD HEIGHT DIFFERENCE

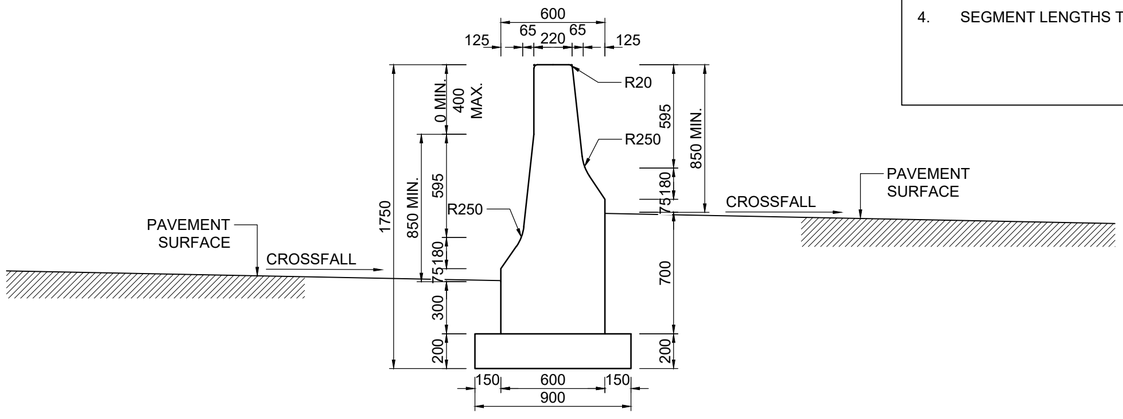

0 - 400mm ROAD HEIGHT DIFFERENCE

No.	DATE	ADDITIONS AND AMENDMENTS
0	OCT - 2023	ORIGINAL VERSION

STANDARD PLANS

WESTERN CAPE GOVERNMENT
DEPARTMENT OF INFRASTRUCTURE
TRANSPORT INFRASTRUCTURE BRANCH

MEDIAN BARRIERS

F-SHAPE MEDIAN BARRIER
TYPE 1 (850mm HIGH)

SCALE : N.T.S.

A2 ORIGINAL

INDEX NO.
WCS/60/5/D1

PLAN NO.
SHEET 1 OF 6

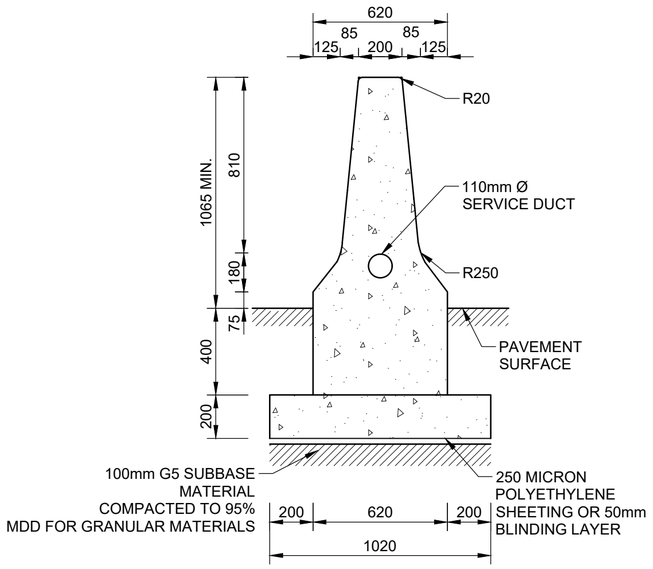

SECTION B-B

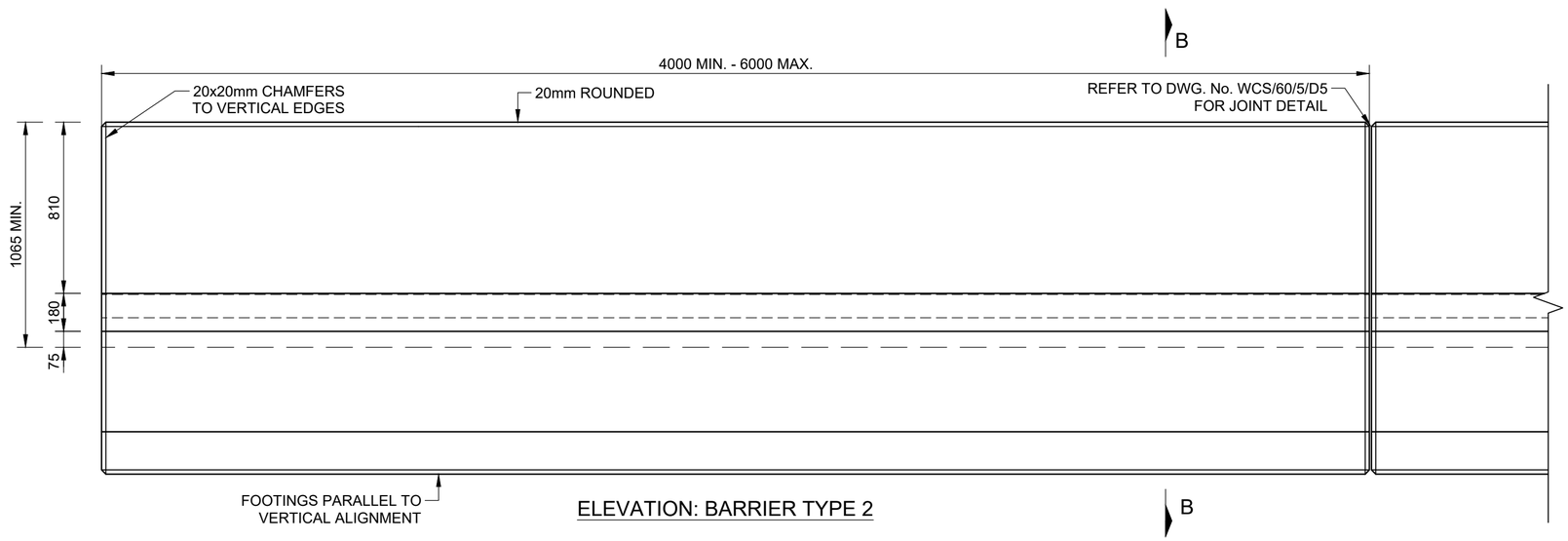

ELEVATION: BARRIER TYPE 2

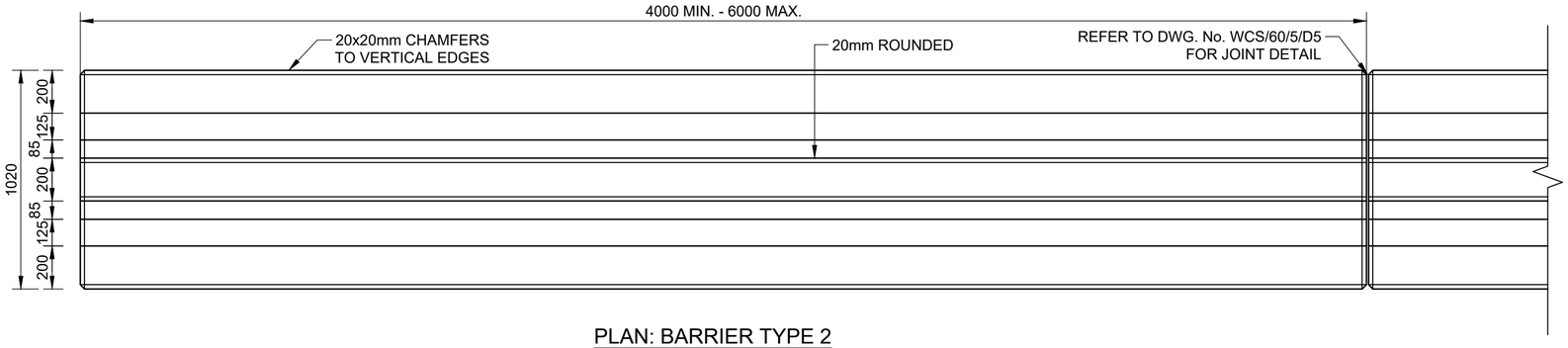

PLAN: BARRIER TYPE 2

NOTES:

1. MATERIAL AND FINISHES

THE MATERIAL AND WORK SHALL COMPLY WITH THE RELEVANT CLAUSES OF SERIES 6000 AND 8000 OF THE STANDARD SPECIFICATIONS, THE PROJECT SPECIFICATIONS AND SHALL INCLUDE THE FOLLOWING

1.1. CONCRETE CLASS

1.1.1. DOUBLE MEDIAN BARRIER (MPa/mm) : W30/20

1.2. STEEL REINFORCING BARS SHALL COMPLY WITH SANS 920:1985
HIGH YIELD BARS: MIN YIELD STRESS 450 MPa
MILD STEEL BARS : MIN YIELD STRESS 250 MPa

1.3. MINIMUM CONCRETE COVER : 40mm

1.4. SURFACE FINISHES:
-CLASS F3 - STEEL SHUTTER FINISH
-CLASS U3 - STEEL TROWEL FINISH2. MANUFACTURE

2.1. THE PRECAST PARAPET UNITS SHALL CONFORM TO ALL DETAILS, INCLUDING DIMENSIONAL TOLERANCES SHOWN ON DETAIL DRAWINGS.

3. TOLERANCES

THE SHUTTER SHALL BE MANUFACTURED TO TOLERANCES THAT WILL ENSURE THAT UNITS AFTER CASTING COMPLY WITH THE FOLLOWING TOLERANCES.

3.1. DIMENSIONS:
TRANSVERSAL : +5mm - 0mm
LONGITUDINAL : +0mm - 5mm

3.2. SURFACE IRREGULARITIES AND WARP MEASURED BY MEANS OF A STRAIGHT EDGE:
TRANSVERSAL : -2mm
LONGITUDINAL : -3mm OVER LENGTH OF UNIT

3.3. SQUARENESS OF ENDS:
NO DIMENSIONS SHALL DEVIATE BY MORE THAN 3mm FROM THE THEORETICAL SQUARE PLANE CORRESPONDING TO THE FURTHEST PROJECTING CONCRETE.

4. SEGMENT LENGTHS TO SUIT ROAD ALIGNMENT

No.	DATE	ADDITIONS AND AMENDMENTS
0	OCT - 2023	ORIGINAL VERSION

STANDARD PLANS

WESTERN CAPE GOVERNMENT
DEPARTMENT OF INFRASTRUCTURE
TRANSPORT INFRASTRUCTURE BRANCH

MEDIAN BARRIERS

F-SHAPE MEDIAN BARRIER
TYPE 2 (1065mm HIGH)

SCALE : N.T.S.

A2 ORIGINAL

INDEX NO.
WCS/60/5/D2

PLAN NO.
SHEET 2 OF 6

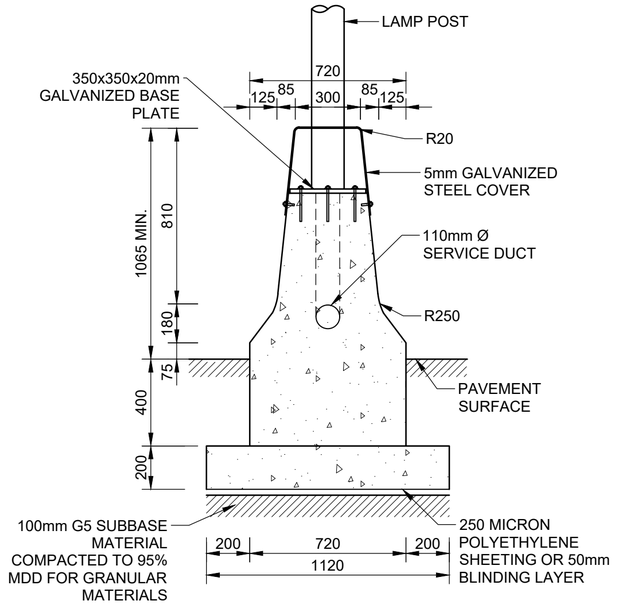

SECTION C-C

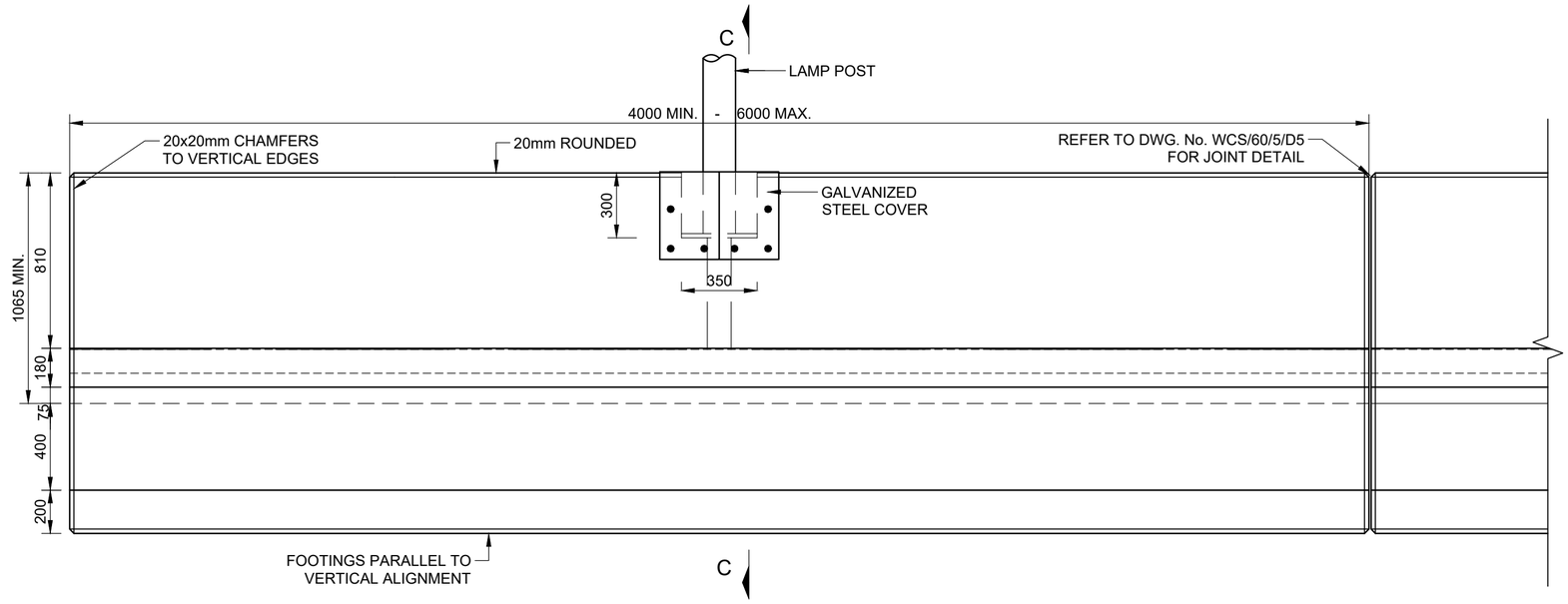

ELEVATION: BARRIER TYPE 3

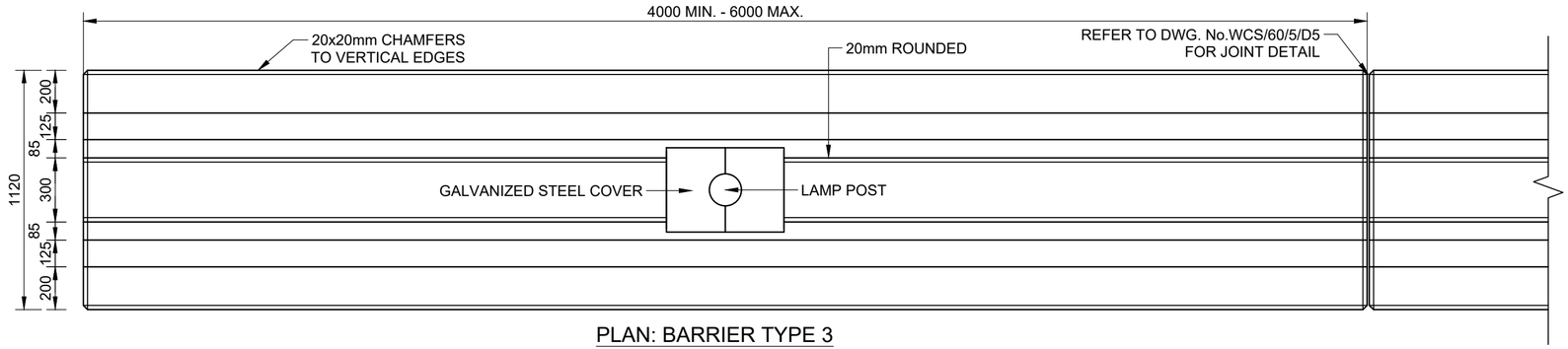

PLAN: BARRIER TYPE 3

NOTES:

1. MATERIAL AND FINISHES

THE MATERIAL AND WORK SHALL COMPLY WITH THE RELEVANT CLAUSES OF SERIES 6000 AND 8000 OF THE STANDARD SPECIFICATIONS, THE PROJECT SPECIFICATIONS AND SHALL INCLUDE THE FOLLOWING

1.1. CONCRETE CLASS

1.1.1. DOUBLE MEDIAN BARRIER (MPa/mm) : W30/20

1.2. STEEL REINFORCING BARS SHALL COMPLY WITH SANS 920:1985
HIGH YIELD BARS : MIN YIELD STRESS 450 MPa
MILD STEEL BARS : MIN YIELD STRESS 250 MPa

1.3. MINIMUM CONCRETE COVER : 40mm

1.4. SURFACE FINISHES:
-CLASS F3 - STEEL SHUTTER FINISH
-CLASS U3 - STEEL TROWEL FINISH

2. MANUFACTURE

2.1. THE PRECAST PARAPET UNITS SHALL CONFORM TO ALL DETAILS, INCLUDING DIMENSIONAL TOLERANCES SHOWN ON DETAIL DRAWINGS.

3. TOLERANCES

THE SHUTTER SHALL BE MANUFACTURED TO TOLERANCES THAT WILL ENSURE THAT UNITS AFTER CASTING COMPLY WITH THE FOLLOWING TOLERANCES.

3.1. DIMENSIONS:
TRANSVERSAL : +5mm - 0mm
LONGITUDINAL : +0mm - 5mm

3.2. SURFACE IRREGULARITIES AND WARP MEASURED BY MEANS OF A STRAIGHT EDGE:
TRANSVERSAL : -2mm
LONGITUDINAL : -3mm OVER LENGTH OF UNIT

3.3. SQUARENESS OF ENDS:
NO DIMENSIONS SHALL DEVIATE BY MORE THAN 3mm FROM THE THEORETICAL SQUARE PLANE CORRESPONDING TO THE FURTHEST PROJECTING CONCRETE.

4. SEGMENT LENGTHS TO SUIT ROAD ALIGNMENT

No.	DATE	ADDITIONS AND AMENDMENTS
0	OCT - 2023	ORIGINAL VERSION

STANDARD PLANS

WESTERN CAPE GOVERNMENT
DEPARTMENT OF INFRASTRUCTURE
TRANSPORT INFRASTRUCTURE BRANCH

MEDIAN BARRIERS

F-SHAPE MEDIAN BARRIER
TYPE 3 (AT LAMP POST)

SCALE : N.T.S.

A2 ORIGINAL

INDEX NO.
WCS/60/5/D3

PLAN NO.
SHEET 3 OF 6

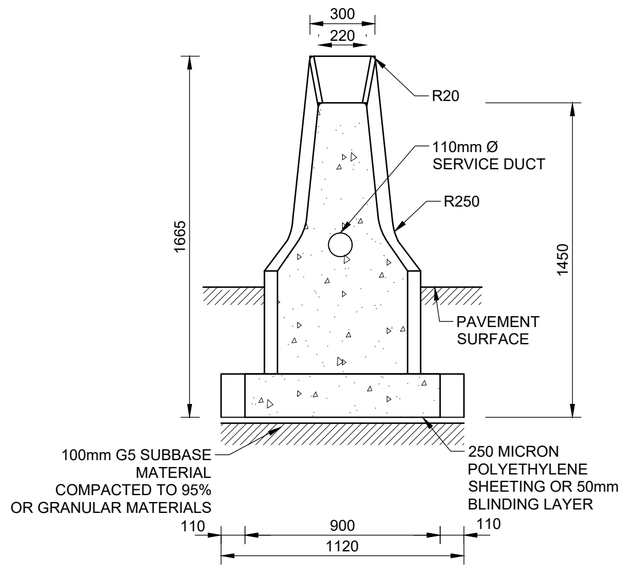

SECTION D-D

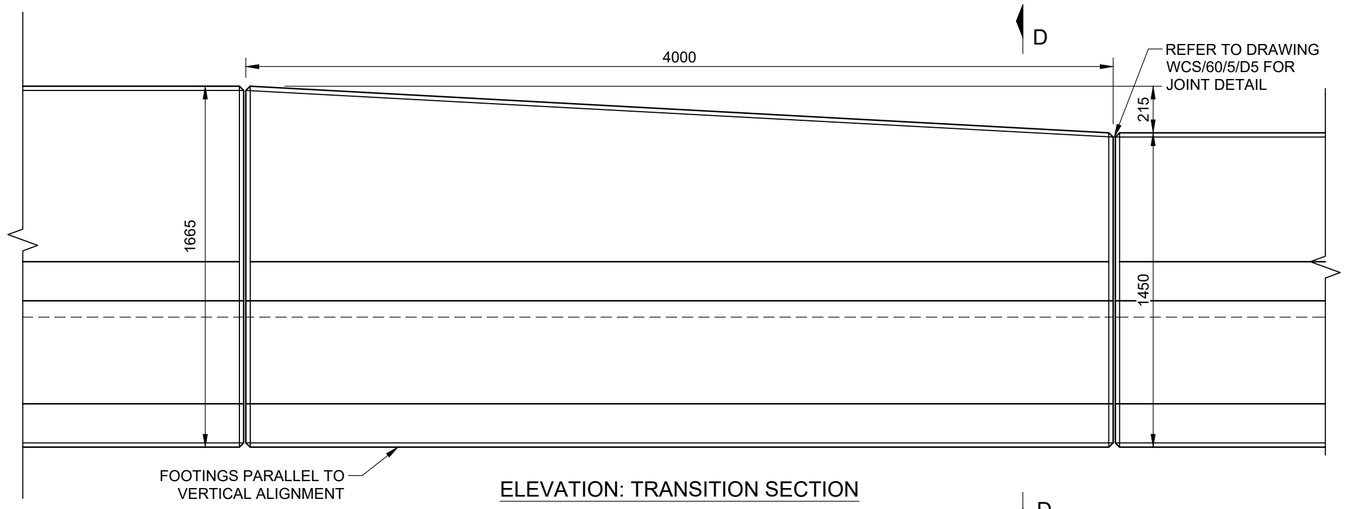

ELEVATION: TRANSITION SECTION

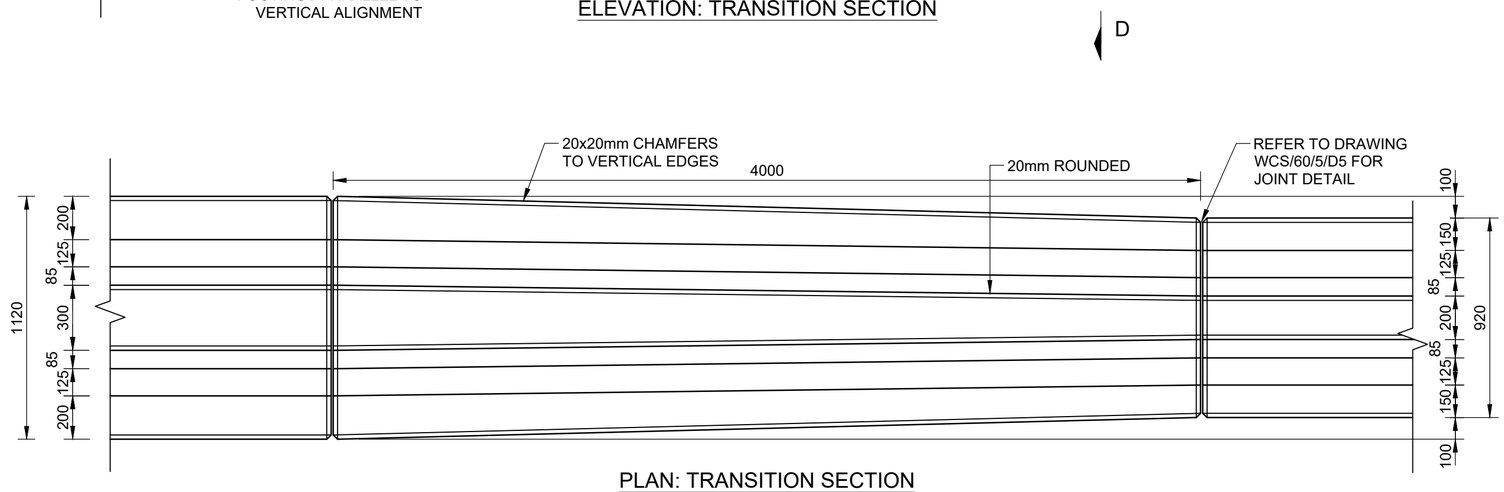

PLAN: TRANSITION SECTION

NOTES:

1. MATERIAL AND FINISHES

THE MATERIAL AND WORK SHALL COMPLY WITH THE RELEVANT CLAUSES OF SERIES 6000 AND 8000 OF THE STANDARD SPECIFICATIONS, THE PROJECT SPECIFICATIONS AND SHALL INCLUDE THE FOLLOWING

1.1. CONCRETE CLASS

1.1.1. DOUBLE MEDIAN BARRIER (MPa/mm) : W30/20

1.2. STEEL REINFORCING BARS SHALL COMPLY WITH SANS 920:1985
HIGH YIELD BARS : MIN YIELD STRESS 450 MPa
MILD STEEL BARS : MIN YIELD STRESS 250 MPa

1.3. MINIMUM CONCRETE COVER : 40mm

1.4. SURFACE FINISHES:
-CLASS F3 - STEEL SHUTTER FINISH
-CLASS U3 - STEEL TROWEL FINISH

2. MANUFACTURE

2.1. THE PRECAST PARAPET UNITS SHALL CONFORM TO ALL DETAILS, INCLUDING DIMENSIONAL TOLERANCES SHOWN ON DETAIL DRAWINGS.

3. TOLERANCES

THE SHUTTER SHALL BE MANUFACTURED TO TOLERANCES THAT WILL ENSURE THAT UNITS AFTER CASTING COMPLY WITH THE FOLLOWING TOLERANCES.

3.1. DIMENSIONS:
TRANSVERSAL : +5mm - 0mm
LONGITUDINAL : +0mm - 5mm

3.2. SURFACE IRREGULARITIES AND WARP MEASURED BY MEANS OF A STRAIGHT EDGE:
TRANSVERSAL : -2mm
LONGITUDINAL : -3mm OVER LENGTH OF UNIT

3.3. SQUARENESS OF ENDS:
NO DIMENSIONS SHALL DEVIATE BY MORE THAN 3mm FROM THE THEORETICAL SQUARE PLANE CORRESPONDING TO THE FURTHEST PROJECTING CONCRETE.

4. SEGMENT LENGTHS TO SUIT ROAD ALIGNMENT

No.	DATE	ADDITIONS AND AMENDMENTS
0	OCT - 2023	ORIGINAL VERSION

STANDARD PLANS

WESTERN CAPE GOVERNMENT
DEPARTMENT OF INFRASTRUCTURE
TRANSPORT INFRASTRUCTURE BRANCH

MEDIAN BARRIERS

F-SHAPE MEDIAN BARRIER
TRANSITION SECTION

SCALE : N.T.S.

A2 ORIGINAL

INDEX NO.
WCS/60/5/D4

PLAN NO.
SHEET 4 OF 6

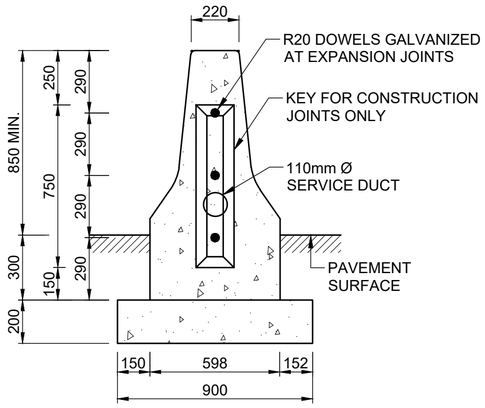

TYPE 1: TYPICAL CROSS SECTION

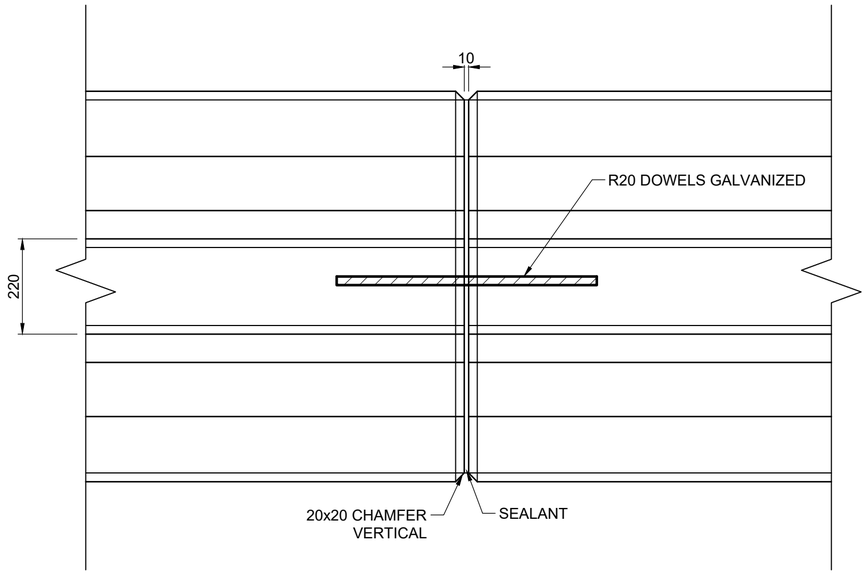

EXPANSION JOINT DETAIL

NOTE

1. EXPANSION JOINT TO BE EVERY 3 PANELS
2. TWO CONSTRUCTION JOINTS BETWEEN EXPANSION JOINTS
3. DOWELS SHALL BE HEAVY DUTY HOT-DIP GALVANIZED WITH AN 85 MICRON COATING IN ACCORDANCE WITH SANS 121.2000

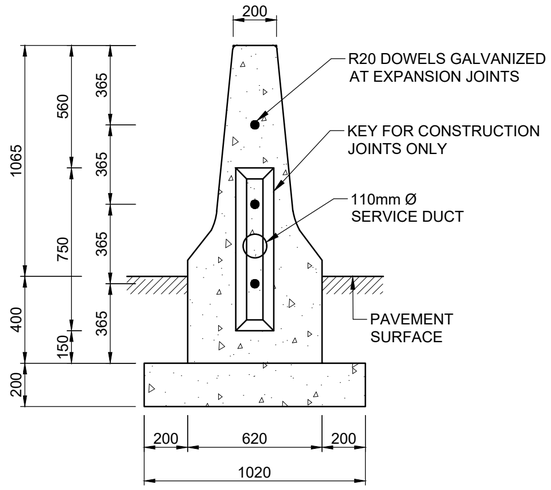

TYPE 2: TYPICAL CROSS SECTION

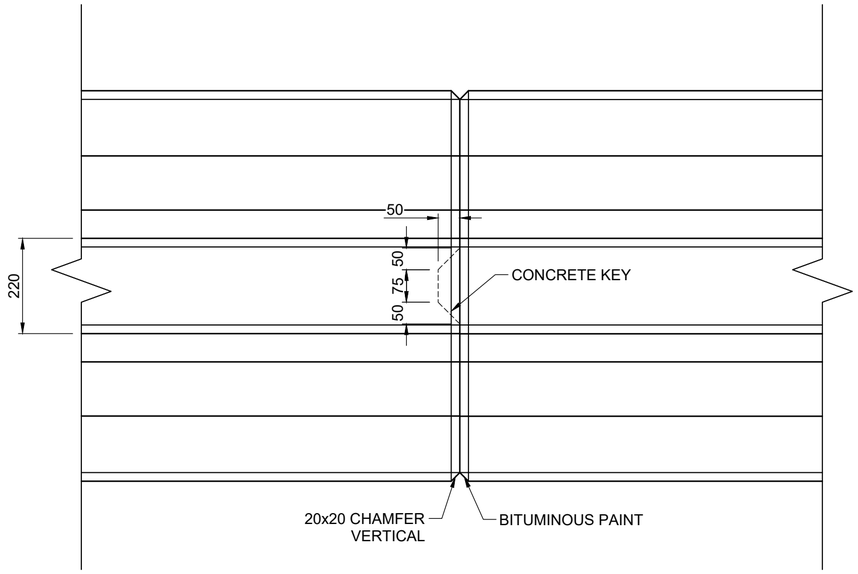

CONSTRUCTION JOINT DETAIL

No.	DATE	ADDITIONS AND AMENDMENTS
0	OCT - 2023	ORIGINAL VERSION

STANDARD PLANS

WESTERN CAPE GOVERNMENT
DEPARTMENT OF INFRASTRUCTURE
TRANSPORT INFRASTRUCTURE BRANCH

MEDIAN BARRIERS

F-SHAPE MEDIAN BARRIER
JOINT DETAIL

SCALE : N.T.S.

A2 ORIGINAL

INDEX NO.
WCS/60/5/D5

PLAN NO.
SHEET 5 OF 6

NOTE:

ALL MILD STEEL SHALL BE HOT-DIPPED GALVANIZED AFTER MANUFACTURE

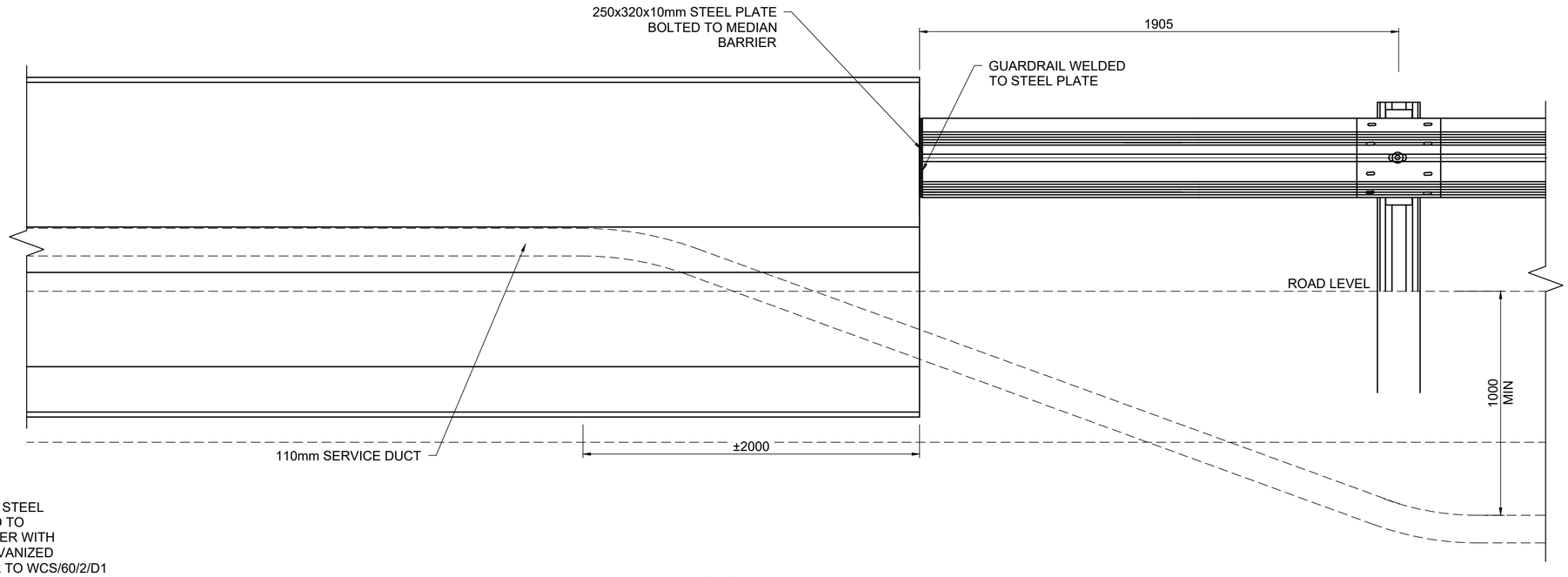

SECTION A-A

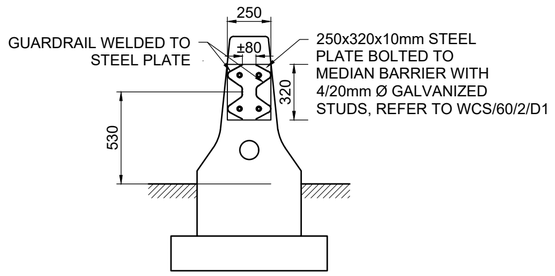

STEEL PLATE DETAIL

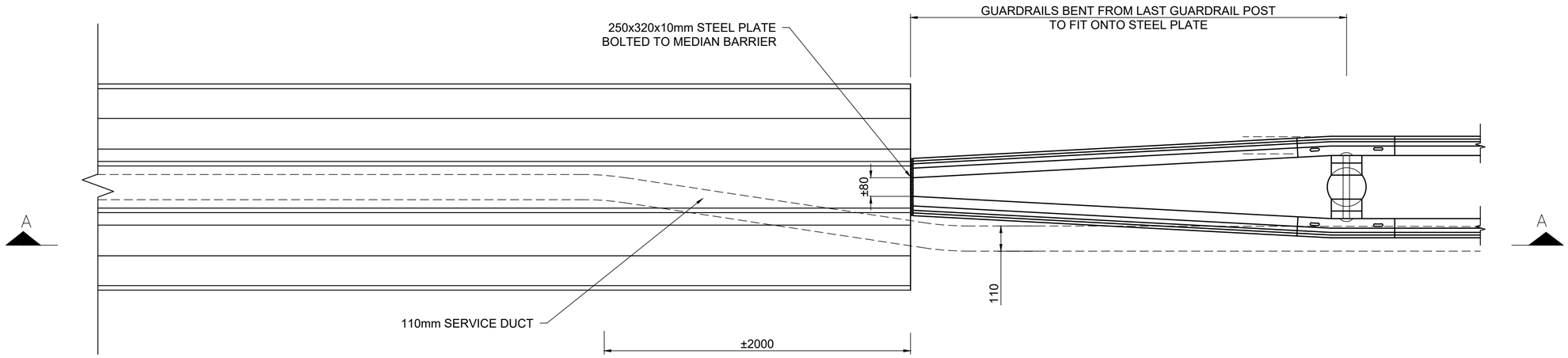

PLAN: TYPICAL MEDIAN BARRIER

No.	DATE	ADDITIONS AND AMENDMENTS
0	OCT - 2023	ORIGINAL VERSION

STANDARD PLANS

WESTERN CAPE GOVERNMENT
DEPARTMENT OF INFRASTRUCTURE
TRANSPORT INFRASTRUCTURE BRANCH

MEDIAN BARRIERS

F-SHAPE MEDIAN BARRIER
END DETAIL

SCALE : N.T.S.

A2 ORIGINAL

INDEX NO.
WCS/60/5/D6

PLAN NO.
SHEET 6 OF 6

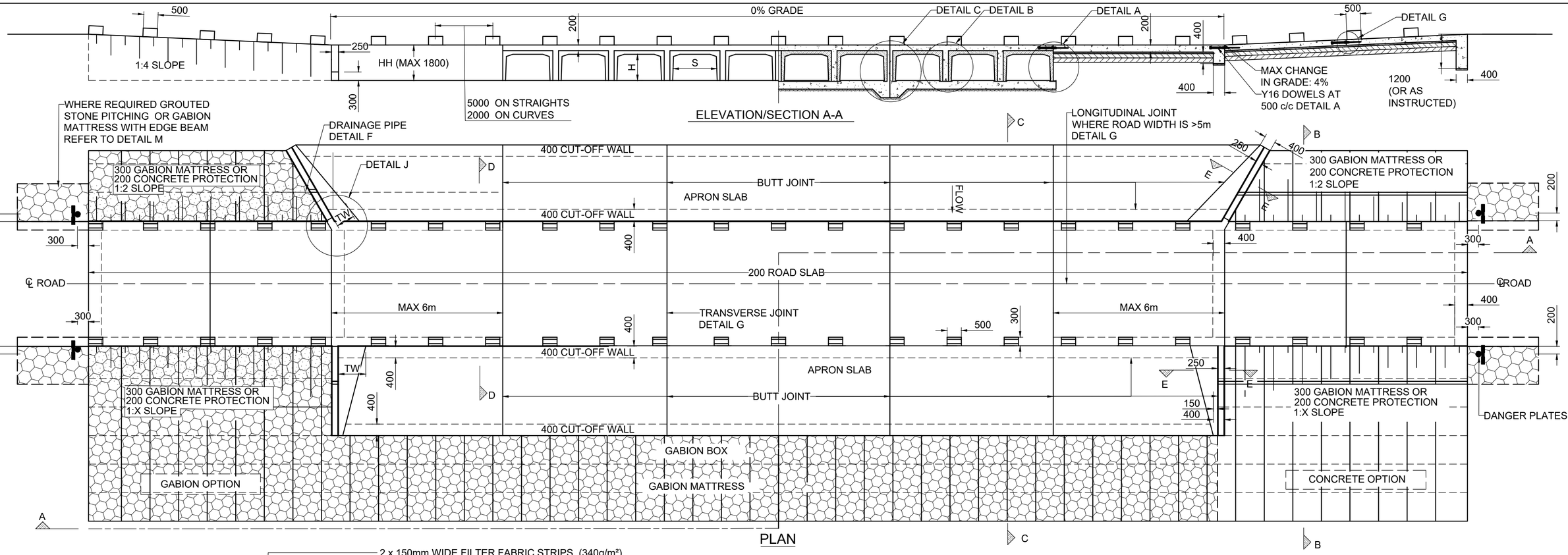

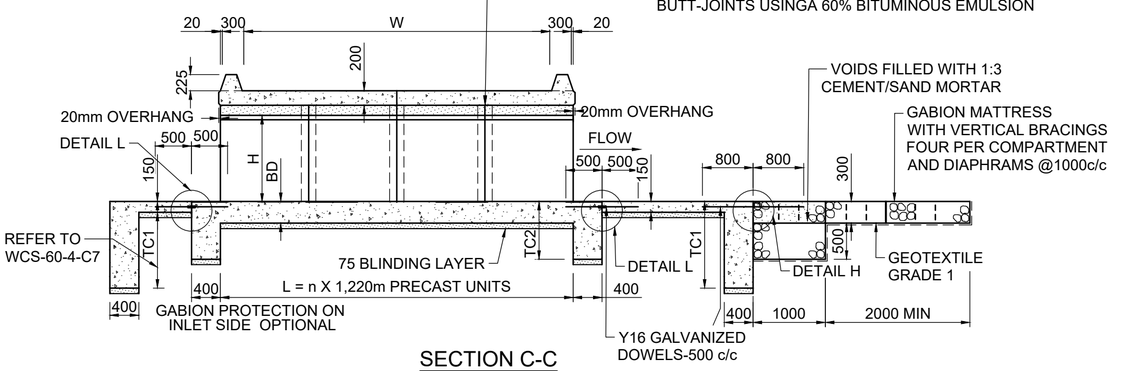

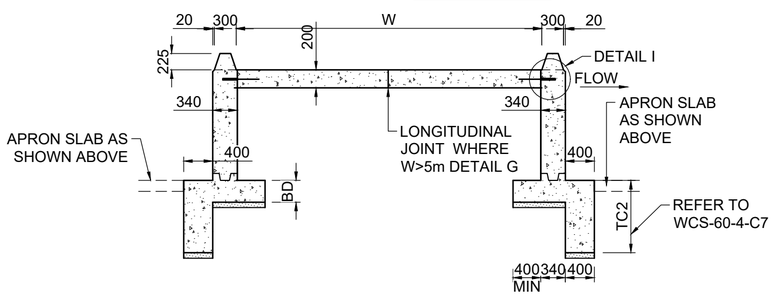

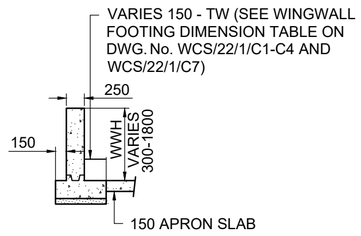

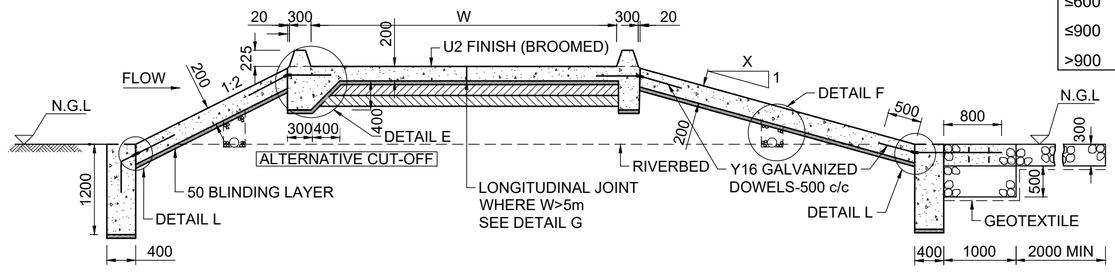

DOWNSTREAM SLOPE	
H	X
≤600	4
≤900	3
>900	2

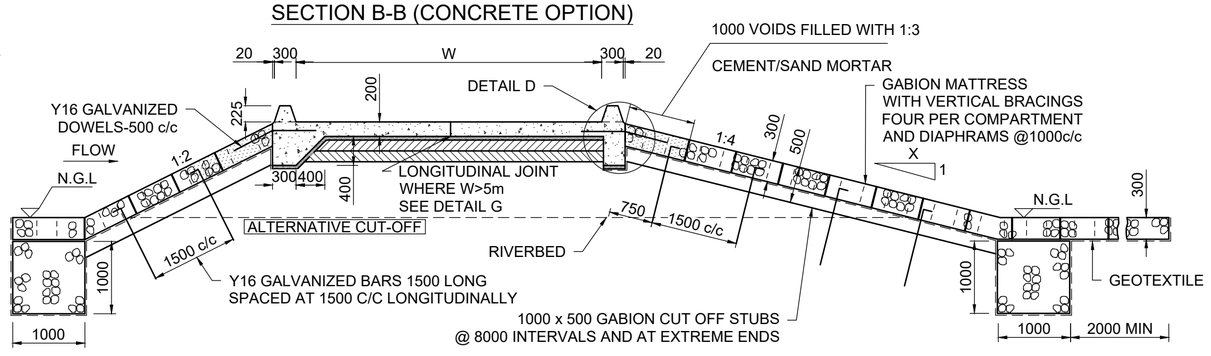

No.	DATE	ADDITIONS AND AMENDMENTS
0	OCT - 2023	ORIGINAL VERSION

STANDARD PLANS

WESTERN CAPE GOVERNMENT
DEPARTMENT OF INFRASTRUCTURE
TRANSPORT INFRASTRUCTURE BRANCH

CAUSEWAYS PREFABRICATED

PORTAL CULVERTS (H<1,5m)

SCALE : N.T.S.

A2 ORIGINAL

INDEX NO.
WCS/60/6/D1

PLAN NO.
SHEET 1 OF 4

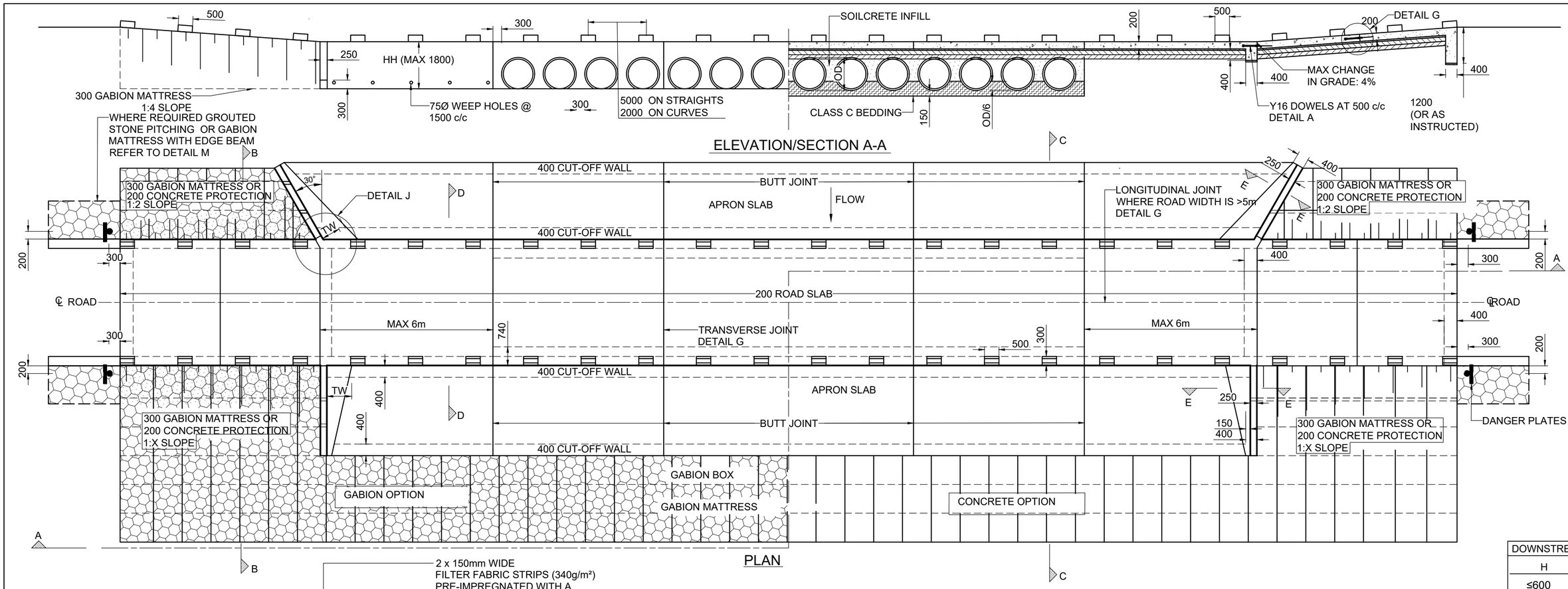

DOWNSTREAM SLOPE	
H	X
≤600	4
≤900	3
>900	2

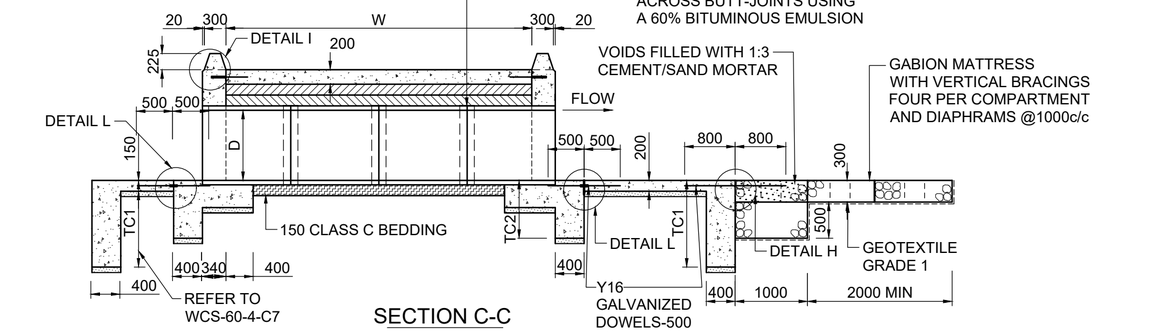

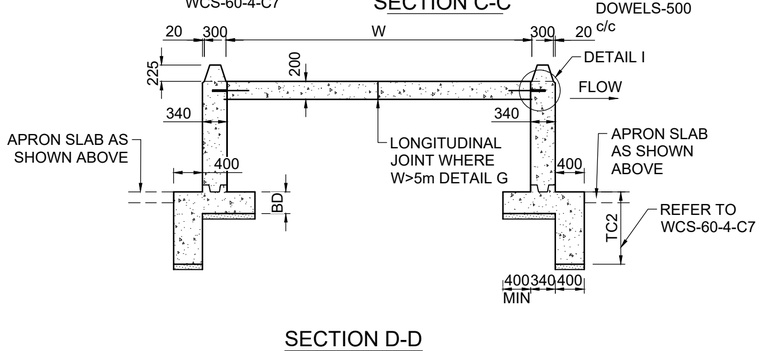

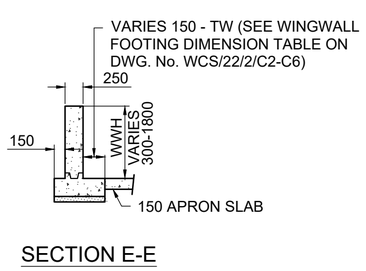

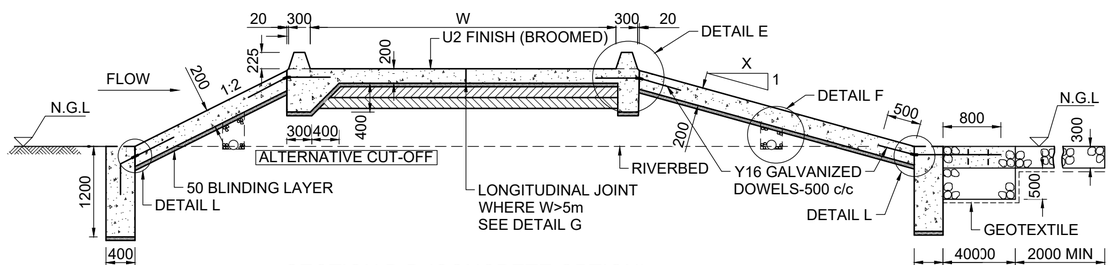

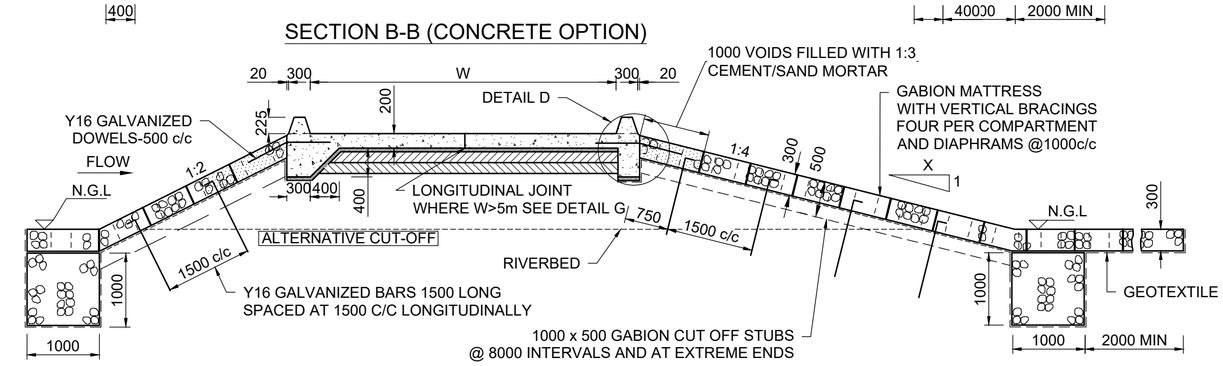

No.	DATE	ADDITIONS AND AMENDMENTS
0	OCT - 2023	ORIGINAL VERSION

STANDARD PLANS

WESTERN CAPE GOVERNMENT
DEPARTMENT OF INFRASTRUCTURE
TRANSPORT INFRASTRUCTURE BRANCH

CAUSEWAYS PREFABRICATED

CONCRETE PIPE CULVERTS

SCALE : N.T.S.

A2 ORIGINAL

INDEX NO.
WCS/60/6/D2

PLAN NO.
SHEET 2 OF 4

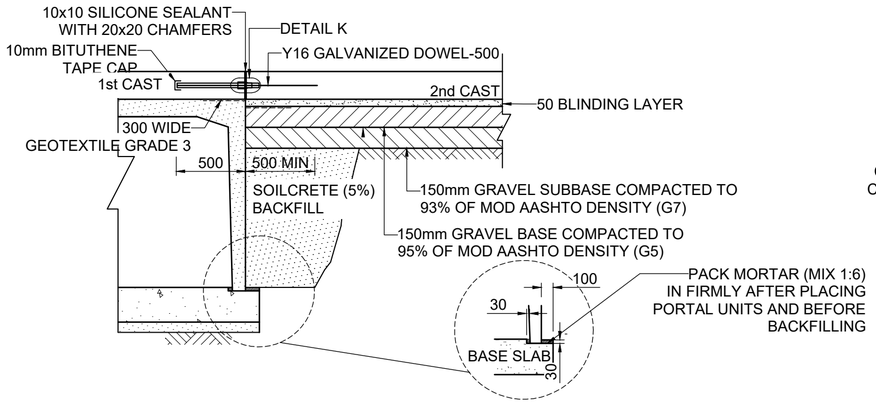

DETAIL A

PROVIDE RECESS IN BASE SLAB AT ALL PORTAL LEG LOCATIONS AS SHOWN

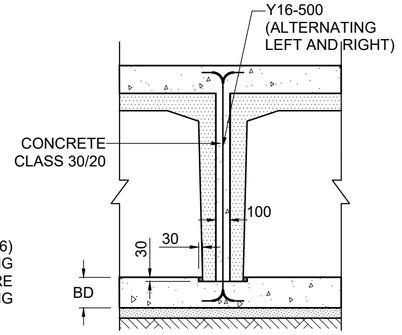

DETAIL B

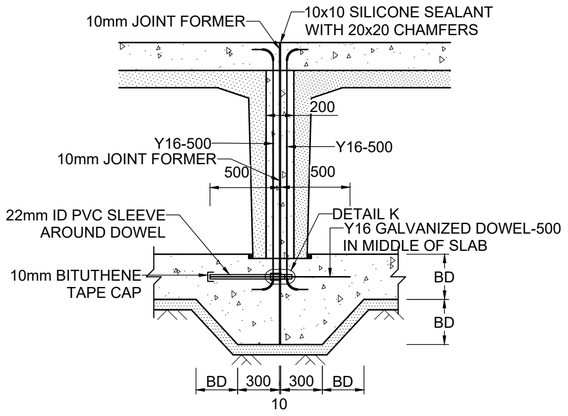

DETAIL C

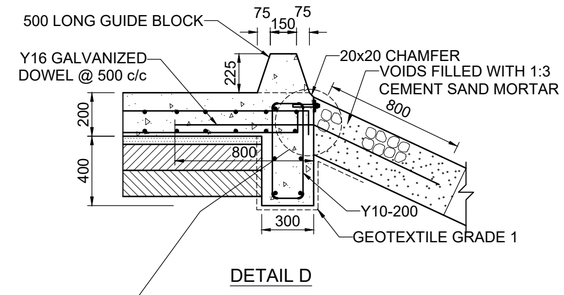

DETAIL D

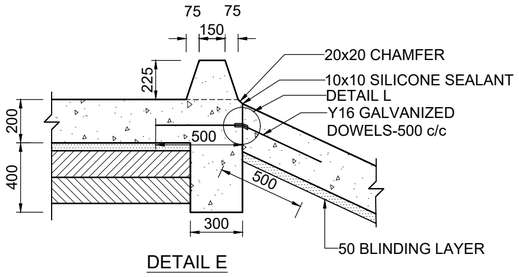

DETAIL E

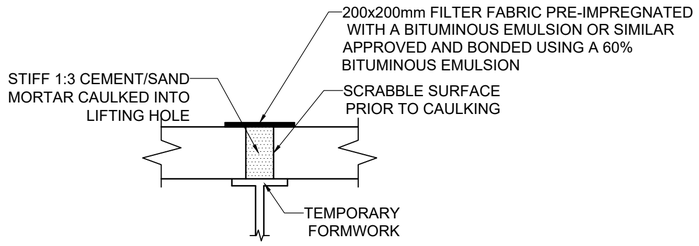

TYPICAL DETAIL
SEALING LIFTING HOLES

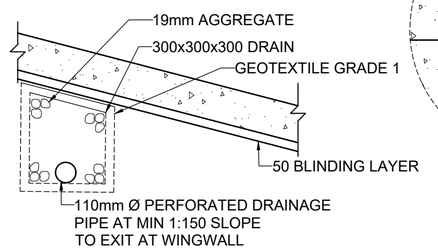

DETAIL F

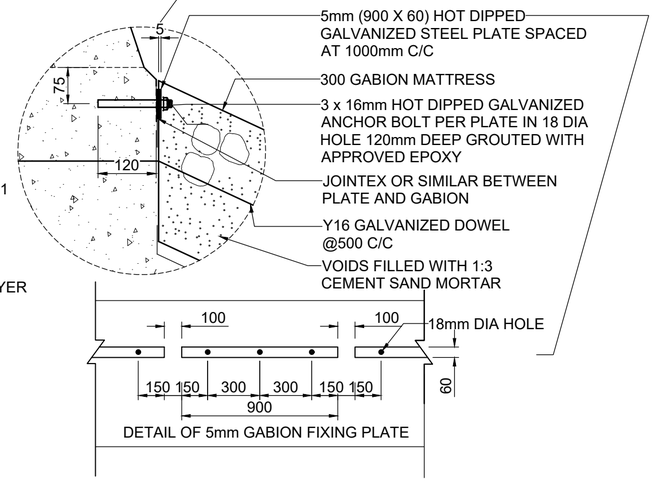

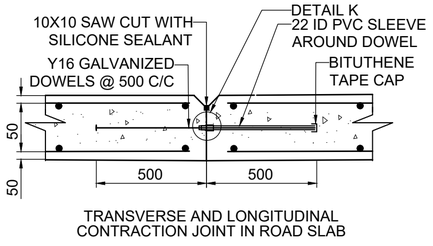

TRANSVERSE AND LONGITUDINAL CONTRACTION JOINT IN ROAD SLAB

DETAIL G

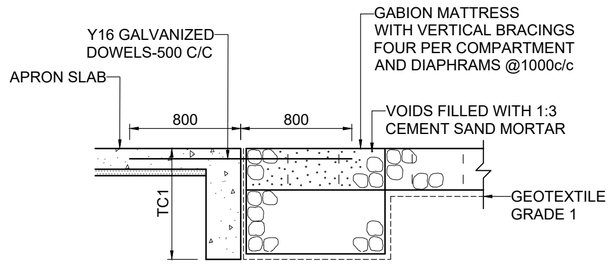

DETAIL H

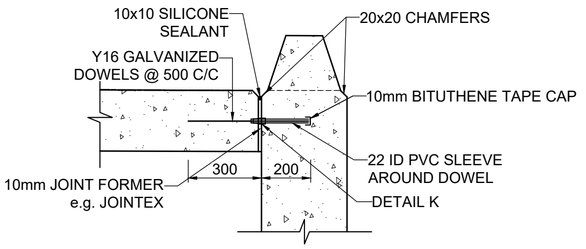

DETAIL I

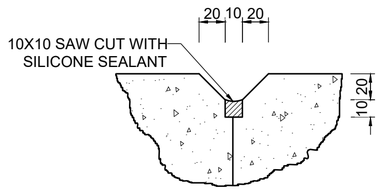

BUT JOINT DETAIL

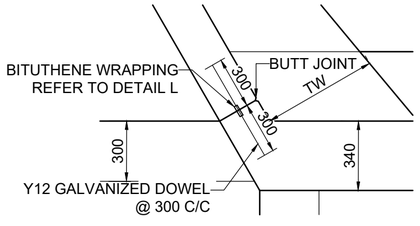

DETAIL J

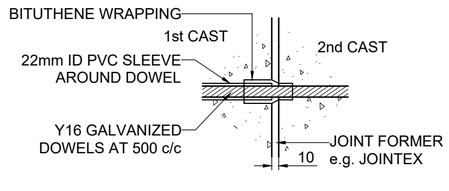

DETAIL K

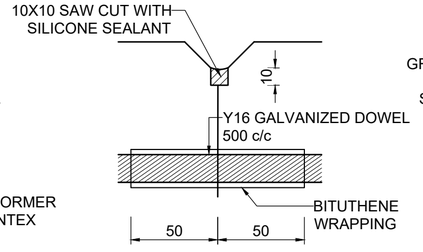

DETAIL L

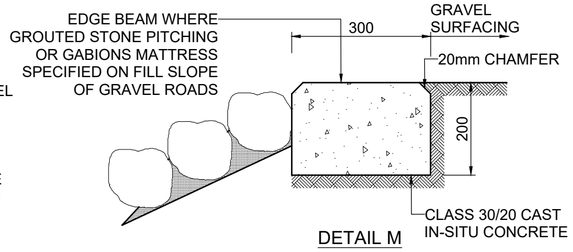

DETAIL M

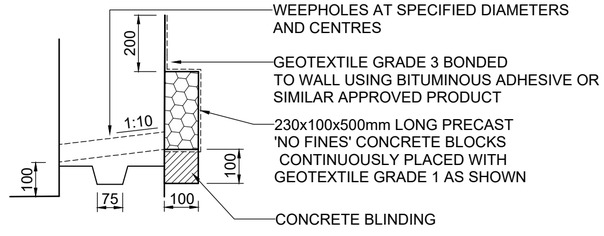

WEEPHOLE DETAIL

No.	DATE	ADDITIONS AND AMENDMENTS
0	OCT - 2023	ORIGINAL VERSION

STANDARD PLANS

WESTERN CAPE GOVERNMENT
DEPARTMENT OF INFRASTRUCTURE
TRANSPORT INFRASTRUCTURE BRANCH

CAUSEWAYS PREFABRICATED

GENERAL DETAILS

SCALE : N.T.S.

A2 ORIGINAL

INDEX NO.
WCS/60/6/D3

PLAN NO.
SHEET 3 OF 4

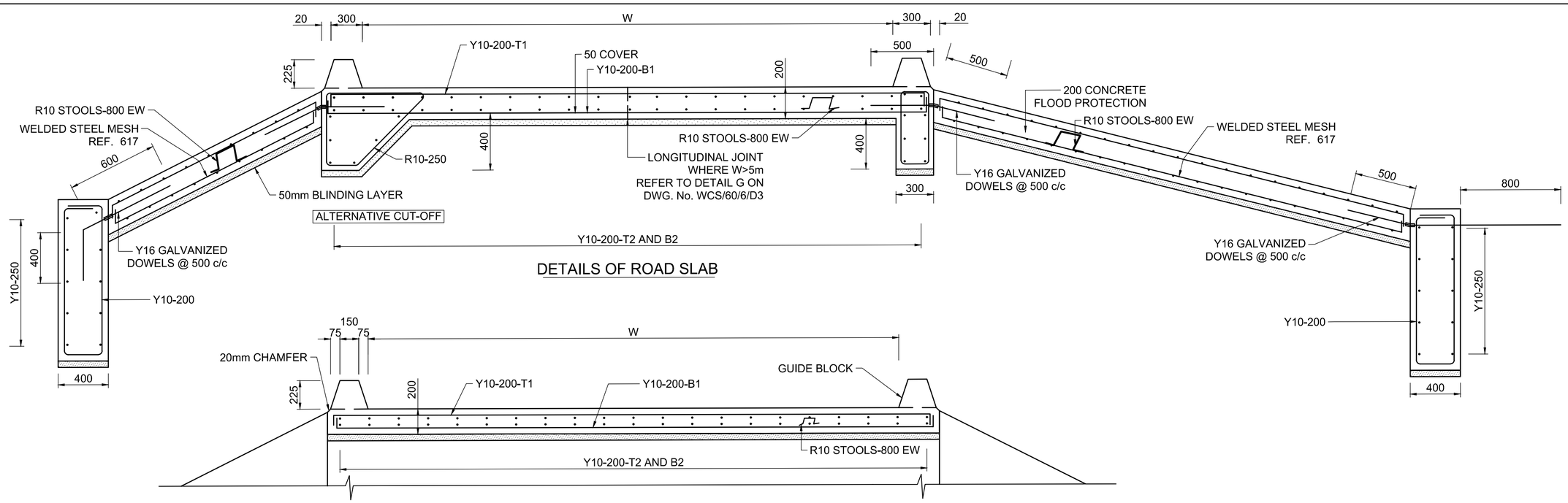

DETAILS OF ROAD SLAB

DETAILS OF ROAD SLAB OVER CULVERTS

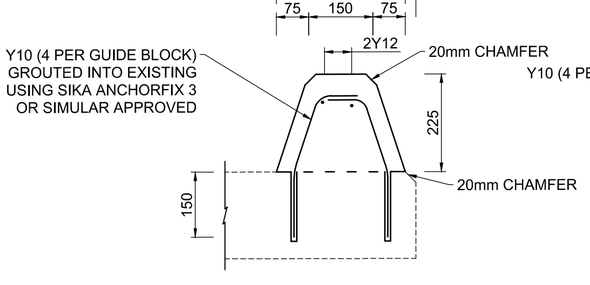

DETAIL FOR REPLACING GUIDE BLOCK

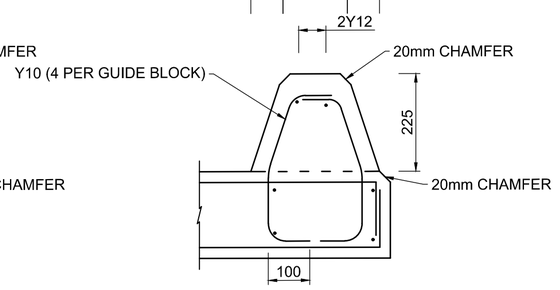

DETAIL OF GUIDE BLOCK

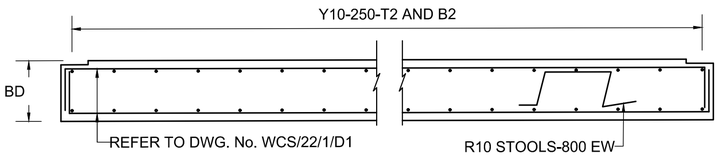

DETAILS OF PORTAL CULVERT IN-SITU BASE SLAB

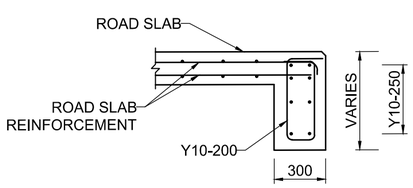

DETAIL OF ROAD SLAB CUT-OFF WALL

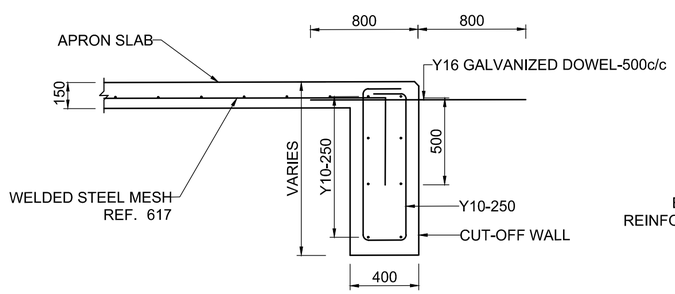

APRON SLAB AND CUT-OFF WALL DETAIL

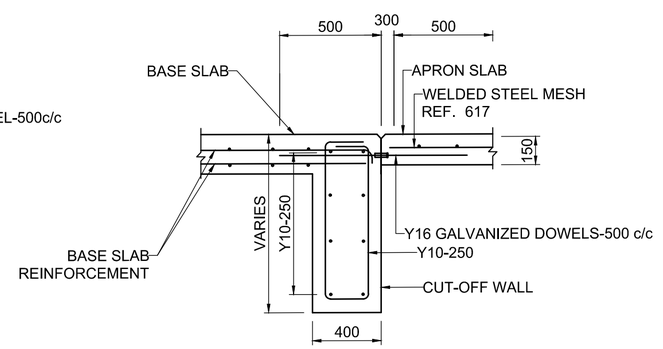

BASE SLAB, CUT-OFF WALL AND APRON SLAB DETAIL

NOTES :

1. FOR INSTALLATION NOTES ON PORTAL CULVERTS REFER TO DWG. No. WCS/22/1/C8
   FOR INSTALLATION NOTES ON PIPE CULVERTS REFER TO DWG. No. WCS/22/2/C1
   FOR WINGWALL SETTING OUT REFER TO DWG. No. WCS/22/1/C7 OR WCS/22/2/C6
2. MATERIAL SPECIFICATIONS: IN-SITU CONCRETE
   - CONCRETE CLASS : 30/20 OR AS SPECIFIED
   - MINIMUM CEMENTITIOUS CONTENT : 300 kg/m ³ THROUGHOUT.
   - GABIONS AND GEOTEXTILE : AS SPECIFIED ON SCOUR PROTECTION DWG No.WCS/51/1/D1.
   - STEEL REINFORCEMENT : HIGH TENSILE STEEL 450 MPa.
   - WELDED STEEL MESH : HIGH TENSILE STEEL 485 MPa.
   - WELDED STEEL MESH REINFORCEMENT TO CONFORM TO SANS 1024.
   - FOR PRECAST UNITS: SEE DESIGN NOTES ON DWG. No. WCS/22/1/D1.
3. ALL EXPOSED SHARP EDGES TO HAVE 20 x 20mm CHAMFERS.
4. MINIMUM CONCRETE COVER = 50mm.
5. GUIDEBLOCK TO BE PAINTED WHITE USING NON-REFLECTORISED ROAD MARKING PAINT OR SIMILAR, INCLUDING PRIMER AS SUPPLIED BY THE MANUFACTURER.
6. Y12 DOWELS IN APRON SLAB TO BE BENT TO AVOID OBSTRUCTING PLACEMENT OF GABIONS. Y16 DOWELS THEN TO BE BENT HORIZONTALLY AND COATED WITH ABECOTE 352 OR SIMILAR BEFORE PLACEMENT OF MATTRESS.
7. THE NECESSITY AS WELL AS THE EXTENT OF GABION MATTRESS PROTECTION TO BE SPECIFIED BY THE ENGINEER.
8. CUT-OFF WALLS TO FORM AN INTEGRAL PART OF APRON AND BASE SLABS.
9. CUT-OFF WALL DEPTHS, BASE SLAB DEPTHS AND BASE SLAB STEEL REINFORCEMENT AS WELL AS PERMISSIBLE FILL HEIGHT (HF) TO BE SPECIFIED BY THE ENGINEER. REFER TO DWG. No. WCS/22/1/D1.
10. FOR REINFORCEMENT DETAILS OF HEADWALLS, WINGWALLS, APRON SLABS AND CUT-OFF WALLS REFER TO DWG. No. WCS/22/1/C2 OR WCS/22/1/C4 OR WCS/22/2/C3 OR WCS/22/2/C5.
11. CONCRETE FINISH: UNFORMED SURFACES - U2 (BROOMED TRANSVERSE)
    FORMED SURFACES (EXPOSED) - F2
    FORMED SURFACES (BURIED) - F1

THIS DRAWING, TO BE READ IN CONJUNCTION WITH SECTION 2200 OF THE COLTO DOCUMENT "STANDARD SPECIFICATIONS FOR ROAD AND BRIDGE WORKS FOR STATE ROAD AUTHORITIES".

No.	DATE	ADDITIONS AND AMENDMENTS
0	OCT - 2023	ORIGINAL VERSION

STANDARD PLANS

WESTERN CAPE GOVERNMENT
DEPARTMENT OF INFRASTRUCTURE
TRANSPORT INFRASTRUCTURE BRANCH

CAUSEWAYS PREFABRICATED

REINFORCEMENT DETAILS

SCALE : N.T.S.

A2 ORIGINAL

INDEX NO. WCS/60/6/D4

PLAN NO. SHEET 4 OF 4

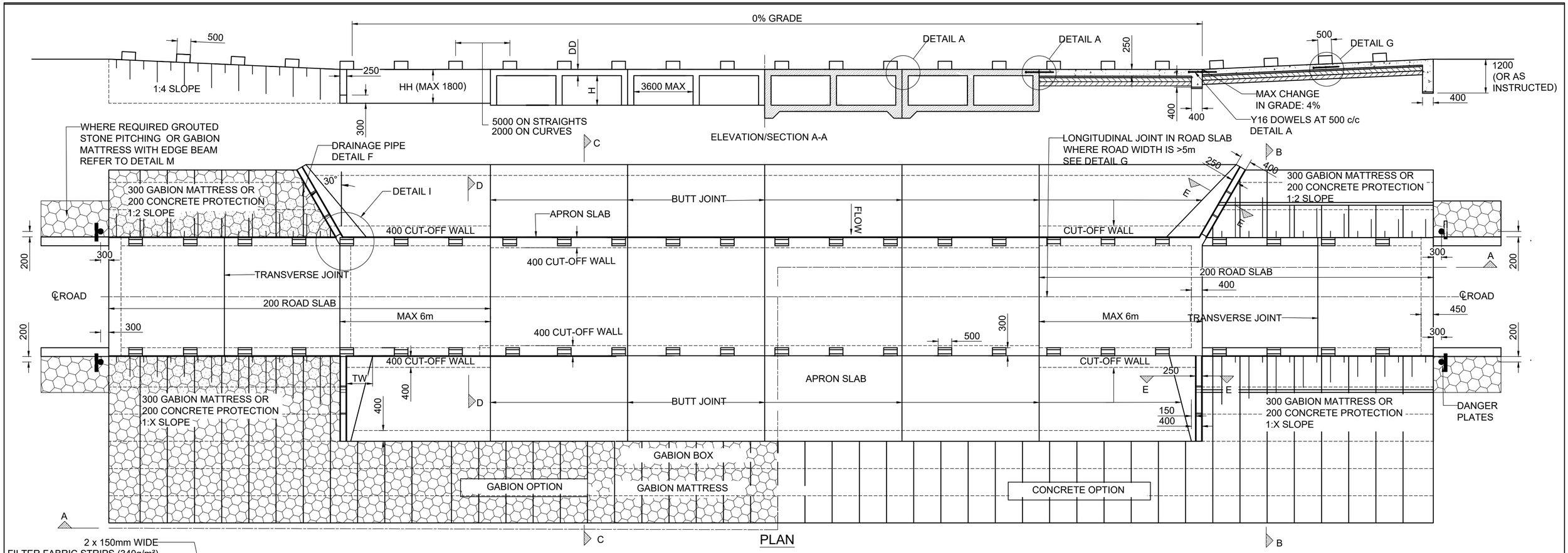

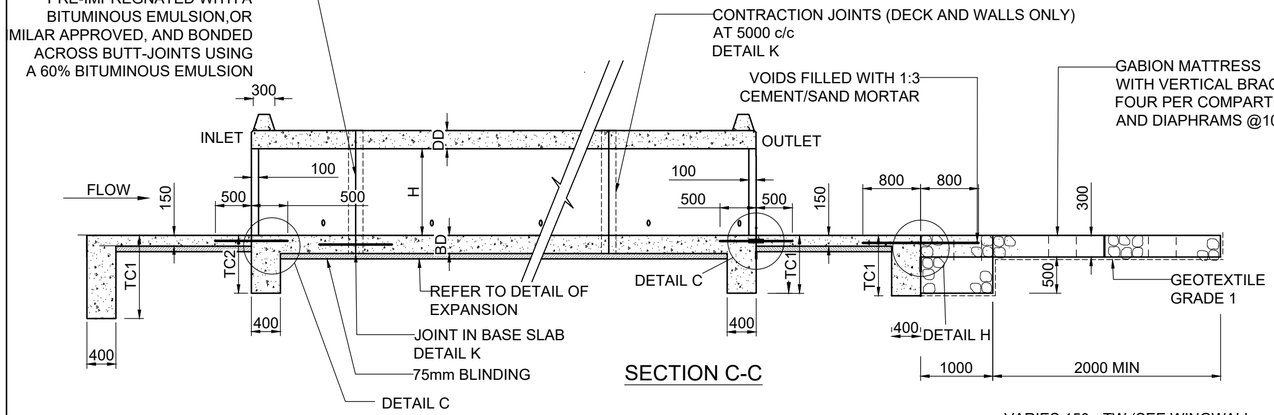

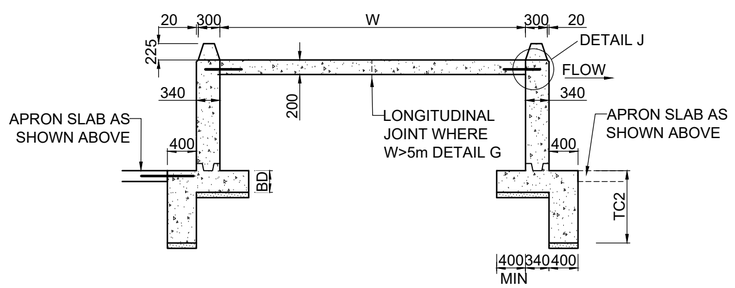

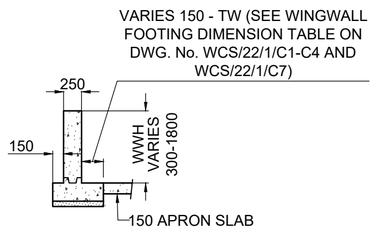

DOWNSTREAM SLOPE	
H	X
≤600	4
≤900	3
>900	2

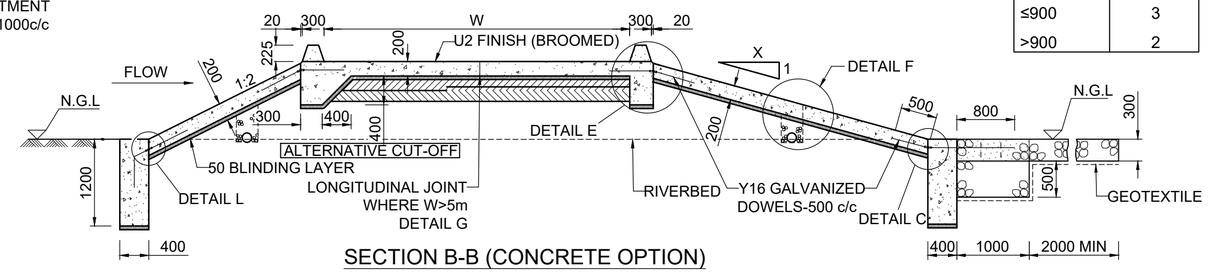

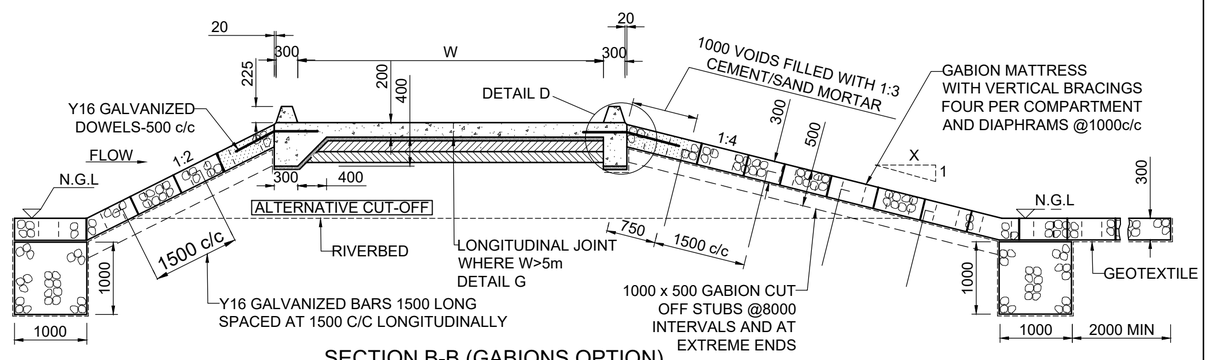

No.	DATE	ADDITIONS AND AMENDMENTS
0	OCT - 2023	ORIGINAL VERSION

STANDARD PLANS

WESTERN CAPE GOVERNMENT
DEPARTMENT OF INFRASTRUCTURE
TRANSPORT INFRASTRUCTURE BRANCH

CAUSEWAYS CAST IN SITU

PORTAL CULVERTS (H<1,5m)

SCALE : N.T.S.

A2 ORIGINAL

INDEX NO.
WCS/60/7/D1

PLAN NO.
SHEET 1 OF 4

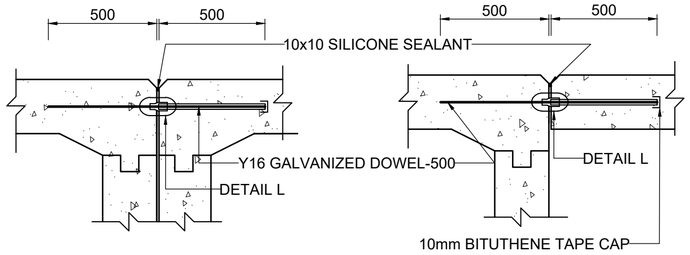

DETAIL A

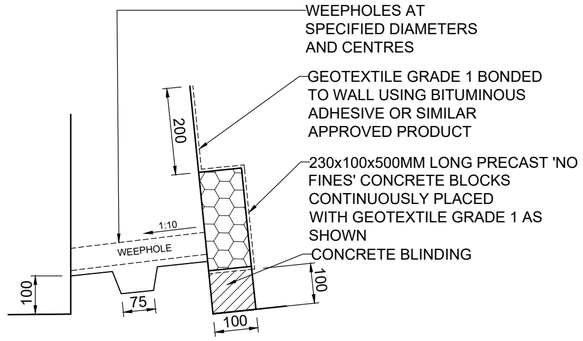

DETAIL B

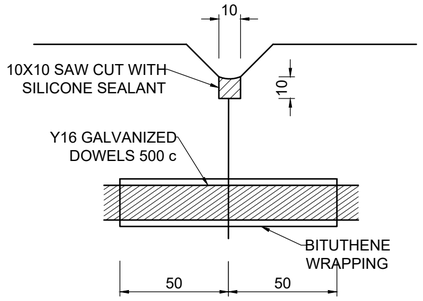

DETAIL C

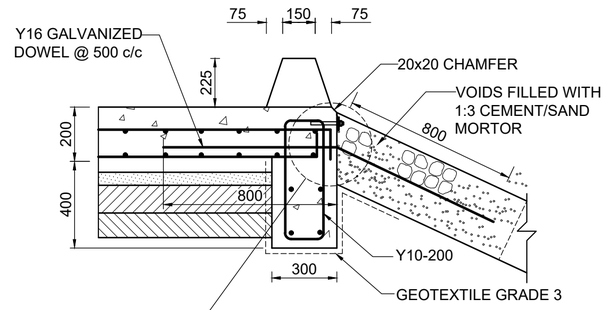

DETAIL D

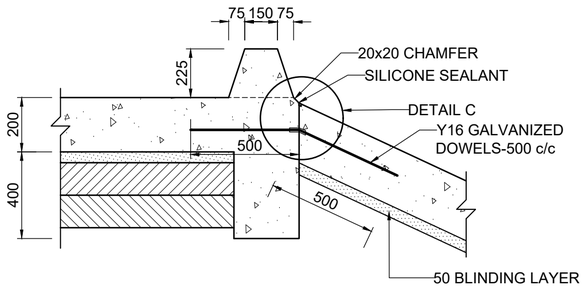

DETAIL E

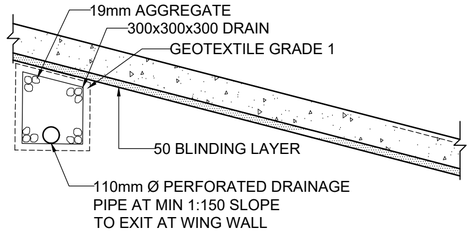

DETAIL F

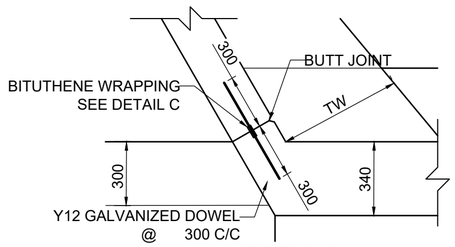

DETAIL I

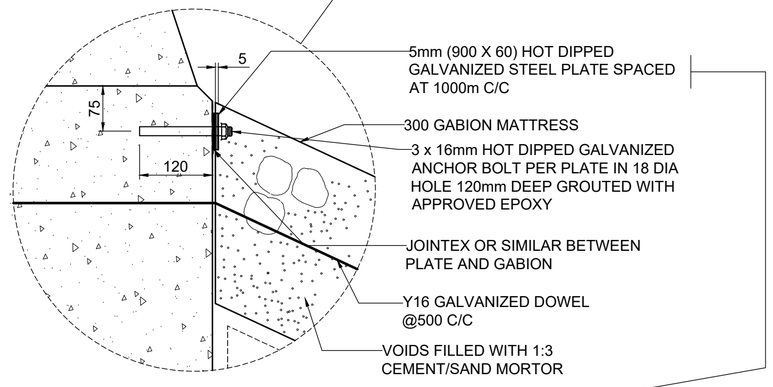

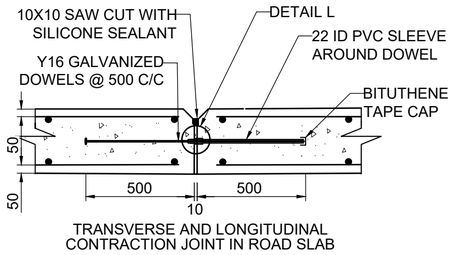

DETAIL G

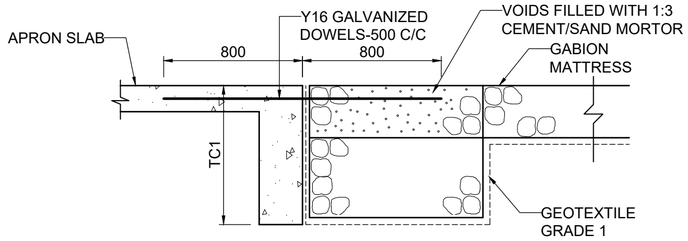

DETAIL H

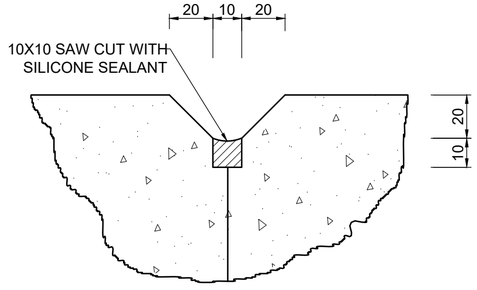

BUTT JOINT DETAIL

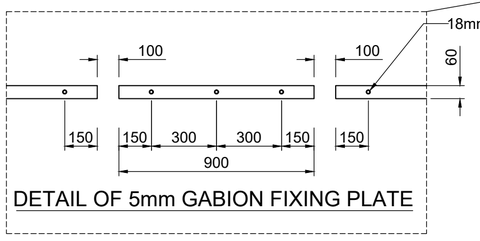

DETAIL OF 5mm GABION FIXING PLATE

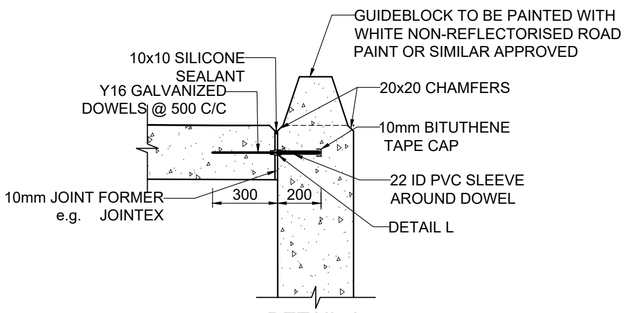

DETAIL J

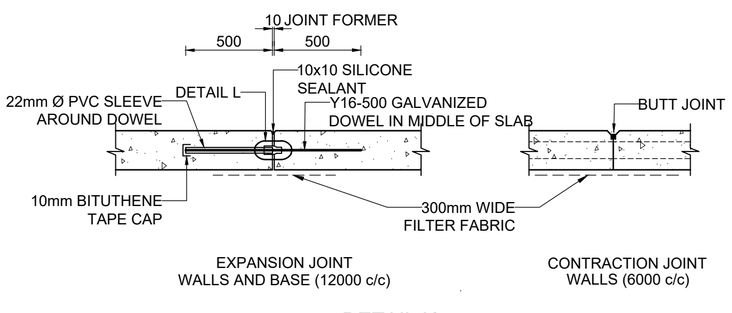

DETAIL K

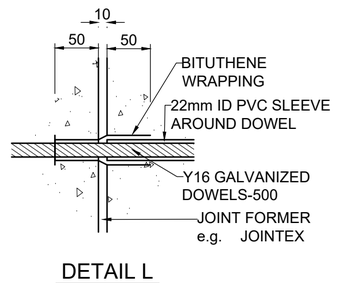

DETAIL L

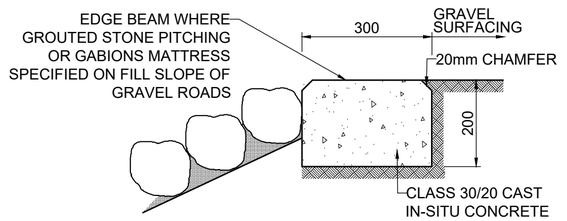

DETAIL M

No.	DATE	ADDITIONS AND AMENDMENTS
0	OCT - 2023	ORIGINAL VERSION

STANDARD PLANS

WESTERN CAPE GOVERNMENT
DEPARTMENT OF INFRASTRUCTURE
TRANSPORT INFRASTRUCTURE BRANCH

CAUSEWAYS CAST IN SITU

GENERAL DETAILS

SCALE : N.T.S.

A2 ORIGINAL

INDEX NO.
WCS/60/7/D2

PLAN NO.
SHEET 2 OF 4

Clear Span S (mm)	Fill Height (meter)	Clear Height H (mm) MIN.	Slab Depth DD/BD (mm)	Wall Width WW (mm)	Haunch Depth HD (mm)	Max Soil Pressure (Kpa)	Bar No:Diameter with spacing 200mm						Spacing 250mm	Spacing 200mm
							1 alt 2 Mid span Deck & Base	3 alt 4 To 4 corners	5 alt 6 Deck & Base	7 alt 8 Side Walls Inside	9 alt 10 Side Walls Outside (if 3&4>16)	11 Huanch Side Walls	12 Alt 13 Longitudinal Steel Diameter	14 Alt 15 Base Centre Wall
2400	0.00	1000-1500	250	250	NONE	140	20 16	16 16	10 10	10 10	(12) (10)		10 10	16 16
3000	0.00	1000-1500	300	300	NONE	130	16 16	16 16	10 10	10 10	(12) (10)		10 10	16 16
3600	0.00	1000-1500	350	350	NONE	130	16 16	20 16	12 10	12 10	(12) (12)		12 10	20 16

TABLE 1

CLEAR HEIGHT OF PORTAL H (mm)	CUT-OFF WALL DEPTHS											
	MATERIAL: VERY FINE TO FINE SAND						MATERIAL: MEDIUM TO COARSE SAND					
	CULVERT SLOPE						CULVERT SLOPE					
	3%		2%		1%		3%		2%		1%	
	TC1	TC2	TC1	TC2	TC1	TC2	TC1	TC2	TC1	TC2	TC1	TC2
600	800	500	800	500	800	500	800	500	800	500	800	500
750	800	500	800	500	800	500	800	500	800	500	800	500
900	800	600	800	500	800	500	800	500	800	500	800	500
1200	900	900	800	800	800	600	800	500	800	500	800	500
1500	1200	1200	1100	1100	800	800	800	800	800	700	800	500

TABLE 2

CLEAR HEIGHT OF PORTAL H (mm)	CUT-OFF WALL DEPTHS											
	MATERIAL: FINE TO MEDIUM GRAVEL						MATERIAL: COARSE GRAVEL /COBBLES TO BOULDERS					
	CULVERT SLOPE						CULVERT SLOPE					
	3%		2%		1%		3%		2%		1%	
	TC1	TC2	TC1	TC2	TC1	TC2	TC1	TC2	TC1	TC2	TC1	TC2
600	500	500	500	500	500	500	500	500	500	500	500	500
750	500	500	500	500	500	500	500	500	500	500	500	500
900	500	500	500	500	500	500	500	500	500	500	500	500
1200	500	500	500	500	500	500	500	500	500	500	500	500
1500	500	500	500	500	500	500	500	500	500	500	500	500

CUT-OFF WALLS
(SEE TABLE 2a AND 2b)

CUT-OFF DIMENSIONS (FOR PROTECTION AGAINST PIPING) ARE BASED ON "SOIL MECHANICS IN ENGINEERING PRACTISE" BY TERZAGHI & PECK

$T = (C_W \times H) - B/3$

WHERE T = TOTAL OF CUT-OFF VERTICAL FACE DEPTHS REQUIRED AGAINST PIPING
H = WATER HEAD : (DIFFERENCE BETWEEN INLET AND OUTLET FLOW PROFILE WITH INLET OPERATING AT 1,5 HT)
B = HORIZONTAL DISTANCE COMPONENT OF LINE OF CREEP FOR STRUCTURE (ASSUMED AT 15,0 METRES).
HORIZONTAL SECTION OF LINE OF CREEP ASSUMED 1/3 AS EFFECTIVE AS A VERTICAL SECTION OF THE SAME LENGTH.
C_W = WEIGHTED CREEP RATIO (SEE TABLE)

NOTE : THESE VALUES ARE THE MINIMUM REQUIRED FOR PROTECTION AGAINST PIPING. THE VALUE OF TC1 (DOWNSTREAM SIDE) SHOULD, FOR PURPOSES OF PROTECTION AGAINST SCOUR, BE INCREASED IN CASE OF HIGH OUTLET VELOCITY AND INSITU MATERIALS OF LOW EROSION RESISTANCE.

MATERIAL	C_W
VERY FINE SAND/SILT	8.5
FINE SAND	7.0
MEDIUM SAND	6.0
COARSE SAND	5.0
FINE GRAVEL	4.0
MEDIUM GRAVEL	3.5
COARSE GRAVEL/COBBLES	3.0
BOULDERS (COBBLES & GRAVEL)	2.5

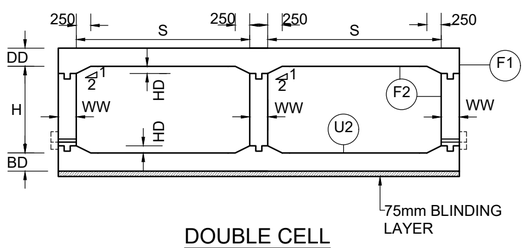

DOUBLE CELL

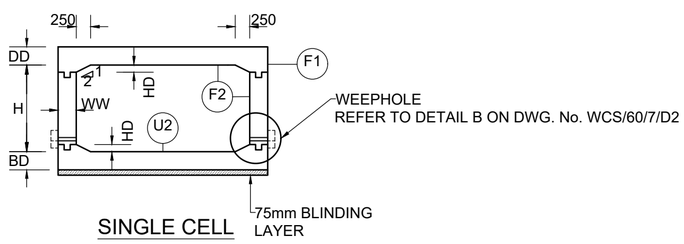

SINGLE CELL

GENERAL NOTES :

1. THE CULVERTS ARE DESIGNED ACCORDING TO TMH7 PARTS 1-3 CODE OF PRACTICE FOR THE DESIGN OF HIGHWAY BRIDGES AND CULVERTS IN SOUTH AFRICA, AS AMENDED IN 1988.
2. THIS DRAWING TO BE READ TOGETHER WITH STANDARD DRAWINGS WCS/60/7/D1 - D4.
3. REFER TO DWG No. WCS/22/1/C7 FOR DIMENSIONS AND SETTING OUT OF WINGWALLS.
4. EROSION PROTECTION AS REQUIRED, REFER TO DWG No. WCS/22/6/D1.
5. GUIDEBLOCK TO BE PAINTED WITH WHITE NON-REFLECTORISED ROAD PAINT OR SIMILAR APPROVED

DESIGN LOADING AND CONDITIONS ON CULVERTS :

1. PRIMARY TRAFFIC LOADING ON CULVERTS (TMH7 PART 2 - 2.6.6):
   (1) NA LOADING
   (2) NB 36 LOADING
   (3) NC LOADING
2. VERTICAL EARTH LOADING ON CULVERTS (TMH7 PART 2 - 2.3.3)
3. HORIZONTAL EARTH PRESSURE ON CULVERTS (TMH7 PART 2 - 2.4):
   (1) SOIL TYPE I - 5.6 kN/m² PER METER DEPTH
   (2) SOIL TYPE II - 7.8 kN/m² PER METER DEPTH
   (3) SURCHARGE PRESSURE OF NA, NB36 AND NC HIGHWAY TRAFFIC LOADING
   (4) NO ALLOWANCE WAS MADE FOR HORIZONTAL WATER PRESSURE BEHIND THE WALLS AND SHOULD BE RELIEVED BY MEANS OF A PROPER DRAINAGE SYSTEM AND WEEPHOLES.
4. MATERIAL DENSITIES :
   (1) SOIL = 2000 kg/m³
   (2) CONCRETE = 2600 kg/m³
5. FOUNDING CONDITIONS:
   (1) CULVERTS WERE DESIGNED BOTH FOR YIELDING AND UNYIELDING FOUNDATION CONDITIONS.
   (2) THE MAXIMUM DESIGN EARTH PRESSURES UNDER THE FOOTING WERE ACCORDING TO THE TABLES AND SHALL NOT EXCEED THE SAFE BEARING CAPACITY OF THE FOUNDING MATERIAL.

MATERIAL SPECIFICATION :

1. CONCRETE	CLASS	CHARACTERISTIC STRENGTH (MPA)	MIN CEMENTITIOUS CONTENTS
(1) BLINDING LAYER	15/20	15	
(2) SLABS AND WALLS	30/20	30	300 kg/m³

2. REINFORCEMENT TYPE	YIELD STRENGTH (MPA)	MIN RADIUS
(1) MILD STEEL BARS (R)	250	2 x DIAM
(2) HIGH TENSILE STEEL BARS (Y)	450	3 x DIAM

DESIGN NOTES :

1. DETERMINE NOMINAL CULVERT SIZE (H+S) TO SUIT HYDRAULIC OR OTHER CONDITION.
2. FROM TABULATION ON DWG No WCS/60/4/C5 DETERMINE CONCRETE DIMENSIONS AND REINFORCING DETAILS.

CONSTRUCTION :

1. ALL EXPOSED SHARP EDGES TO HAVE 20 x 20mm CHAMFERS.
2. CONCRETE COVER TO REINFORCING: 50mm FOR ALL STRUCTURAL ELEMENTS.
3. CONCRETE FINISH:
   NON-VISIBLE SURFACES - F1
   VISIBLE SURFACES - F2
   UNFORMED SURFACES - U2

THIS DRAWING TO BE READ IN CONJUNCTION WITH SECTION 2200 OF THE COLTO DOCUMENT "STANDARD SPECIFICATIONS FOR ROAD AND BRIDGE WORKS FOR STATE ROAD AUTHORITIES".

NOTATION :

H	: CLEAR INTERNAL HEIGHT OF PORTAL
S	: CLEAR INTERNAL SPAN OF PORTAL
HH	: HEADWALL HEIGHT
DD	: DECK SLAB THICKNESS
BD	: BASE SLAB THICKNESS
TC1, TC2	: CUT-OFF WALL DEPTHS
HD	: HAUNCH DEPTH
WW	: WALL WIDTH
HL	: FILL HEIGHT LEFT
HM	: FILL HEIGHT MIDDLE
HR	: FILL HEIGHT RIGHT

No.	DATE	ADDITIONS AND AMENDMENTS
0	OCT - 2023	ORIGINAL VERSION

STANDARD PLANS

WESTERN CAPE GOVERNMENT
DEPARTMENT OF INFRASTRUCTURE
TRANSPORT INFRASTRUCTURE BRANCH

CAUSEWAYS CAST IN SITU

PORTAL CULVER SIZE DETAILS

SCALE : N.T.S.

A2 ORIGINAL

INDEX NO. WCS/60/7/D3

PLAN NO. SHEET 3 OF 4

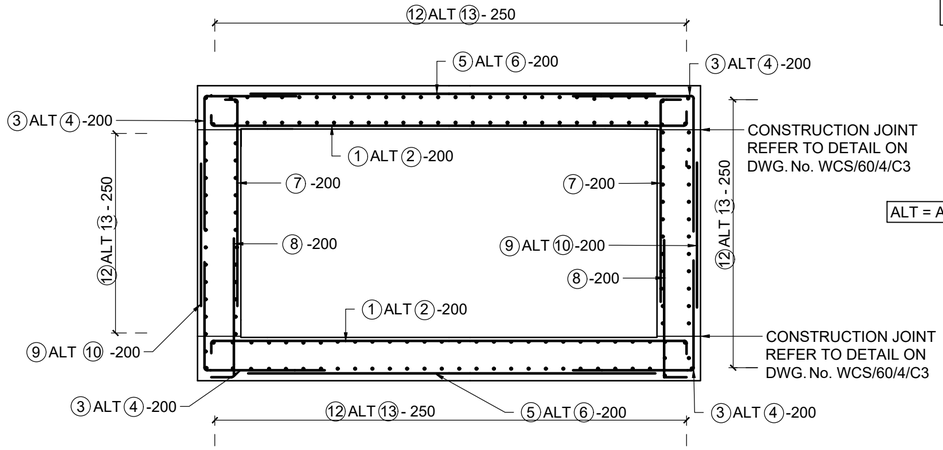

NOTE:
LAP LENGTHS TO BE 45 X THE DIAMETER OF THE LARGEST BAR

REFERENCE DRAWING FOR REINFORCEMENT TABLES FOR CAUSEWAYS : WCS/60/7/D3

REFERENCE DRAWING FOR EXTENDED REINFORCEMENT TABLES FOR CULVERTS: WCS/60/4/C5

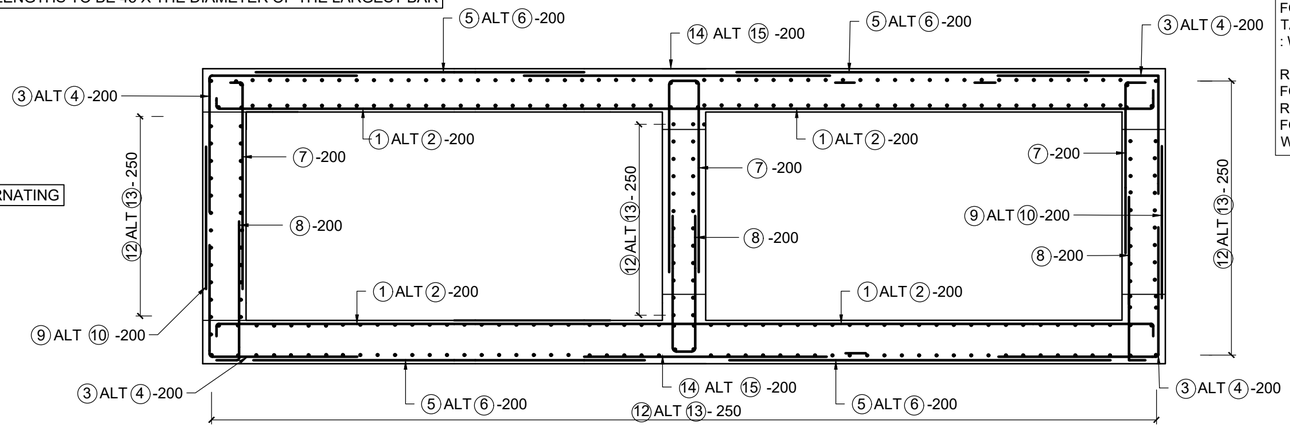

SINGLE CELL

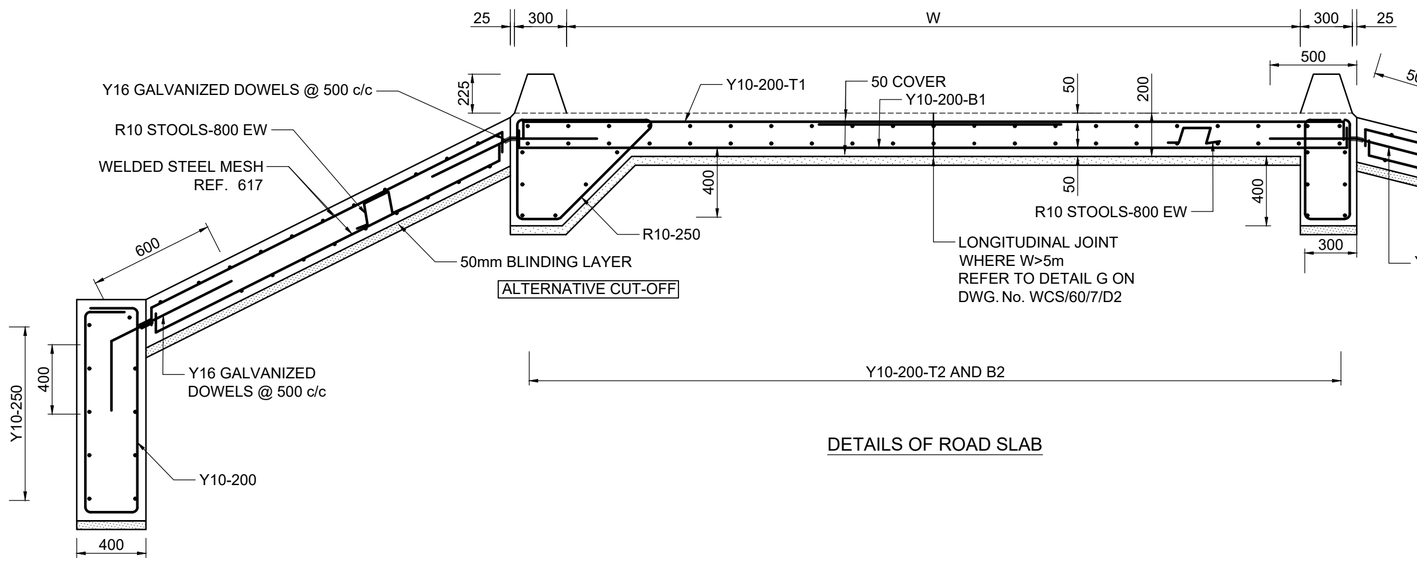

DETAILS OF ROAD SLAB

DOUBLE CELL

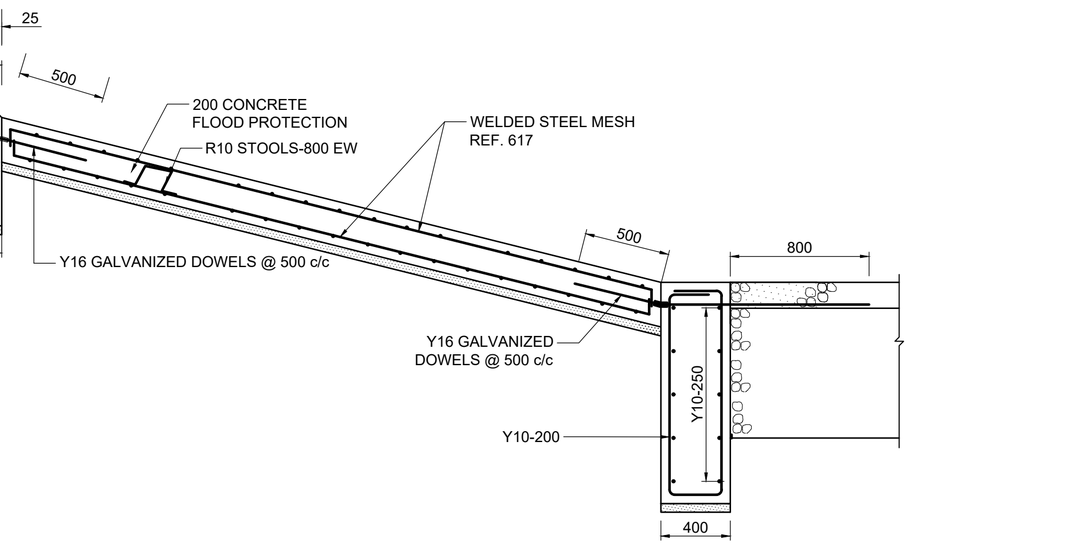

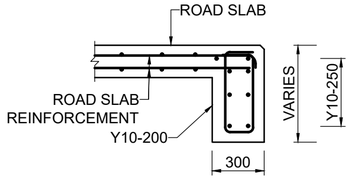

DETAIL OF ROAD SLAB CUT-OFF WALL

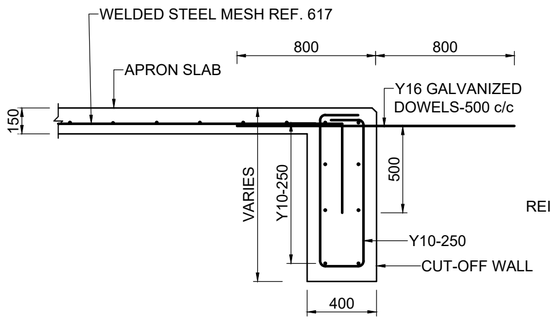

APRON SLAB AND CUT-OFF WALL DETAIL

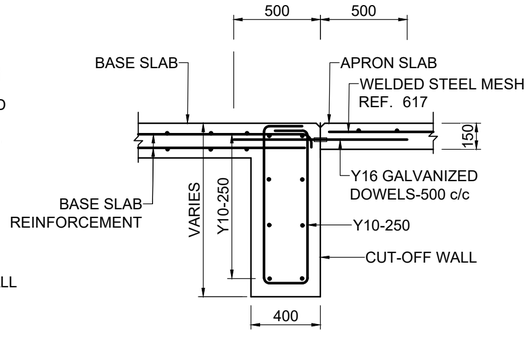

BASE SLAB, CUT-OFF WALL AND APRON SLAB DETAIL

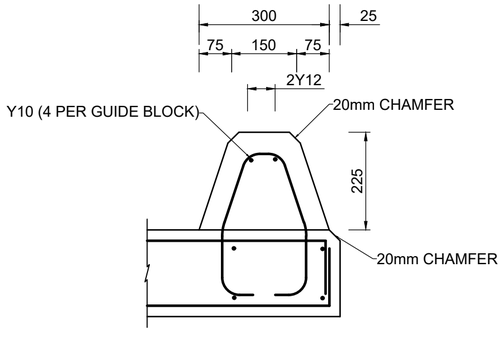

DETAIL OF GUIDE BLOCK

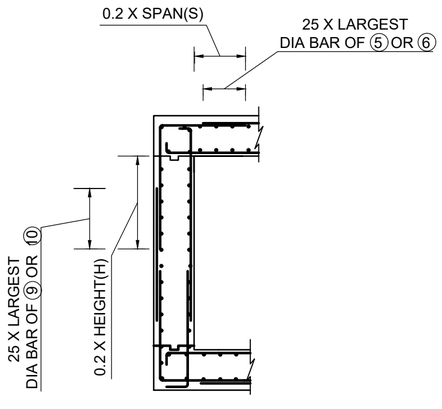

TYPICAL REINFORCEMENT CURTAILMENT

No.	DATE	ADDITIONS AND AMENDMENTS
0	OCT - 2023	ORIGINAL VERSION

STANDARD PLANS

WESTERN CAPE GOVERNMENT
DEPARTMENT OF INFRASTRUCTURE
TRANSPORT INFRASTRUCTURE BRANCH

CAUSEWAYS CAST IN SITU

REINFORCEMENT DETAILS

SCALE : N.T.S.

A2 ORIGINAL

INDEX NO.
WCS/60/7/D4

PLAN NO.
SHEET 4 OF 4

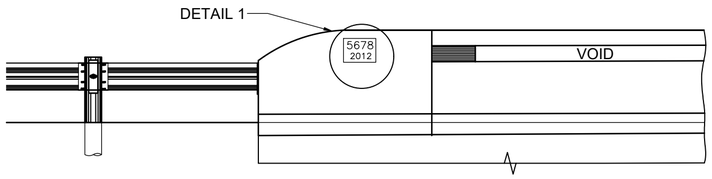

INSIDE ELEVATION OF BALUSTRADE(ALL BRIDGES)

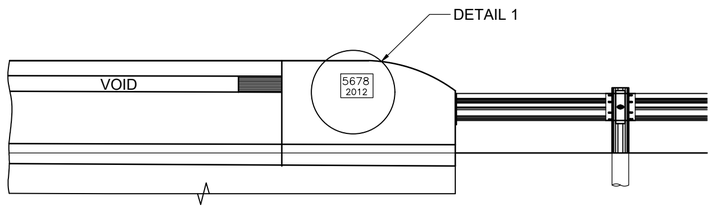

OUTSIDE ELEVATION OF BALUSTRADE(ONLY APPLICABLE TO ROAD OVER ROAD BRIDGES)

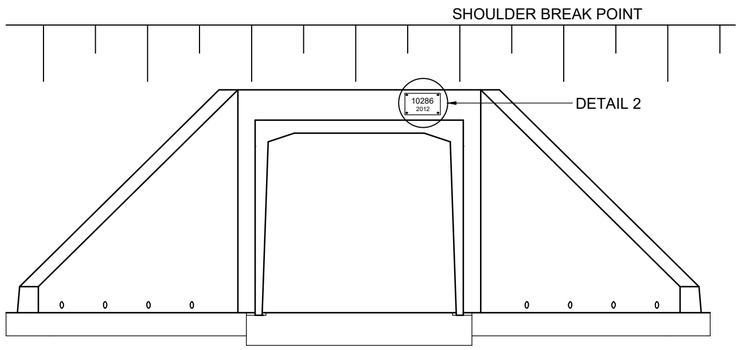

CULVERT ELEVATION

FOR WIDENING OR SIGNIFICANT UPGRADES TO THE STRUCTURE, THE COMPLETION YEAR OF THE ORIGINAL STRUCTURE AND THE YEAR OF THE COMPLETION OF THE UPGRADE TO BE SHOWN ON THE STRUCTURE

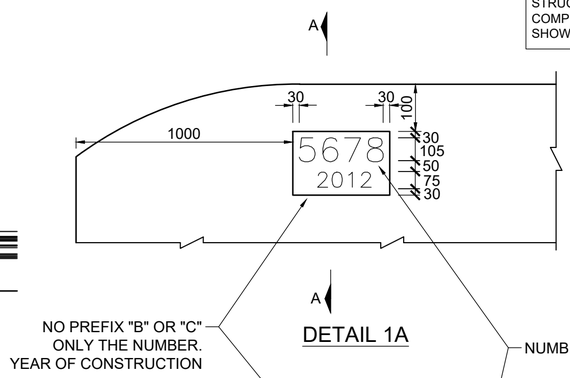

DETAIL 1A

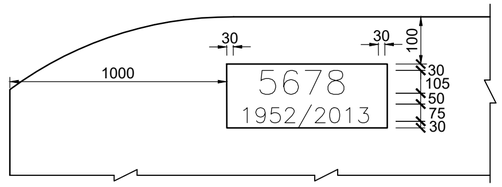

DETAIL 1B

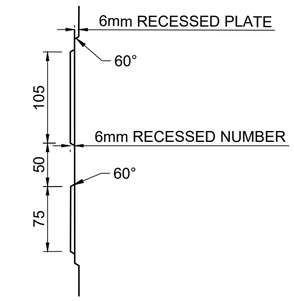

SECTION A-A

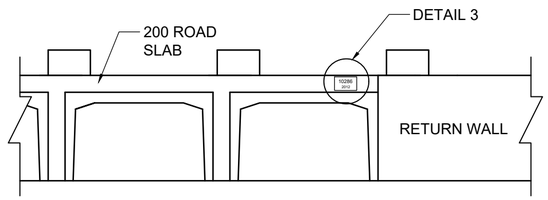

CAUSEWAY ELEVATION

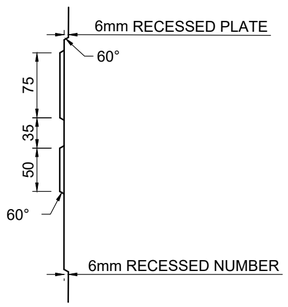

SECTION B-B

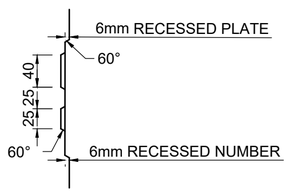

SECTION C-C

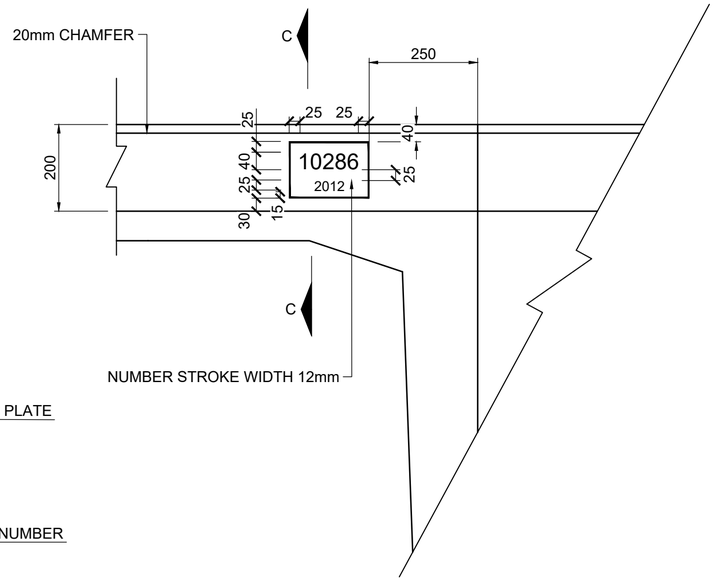

DETAIL 3

NOTES :

1. BRIDGES

ON APPROACHING THE BRIDGE FROM EITHER END, THE SPECIFIC BRIDGE NUMBER AND YEAR OF CONSTRUCTION SHALL BE INSCRIBED ON THE INSIDE (AND OUTSIDE FOR ROAD OVER ROAD BRIDGES) OF THE LEFT HAND SIDE END PANEL OF THE BALUSTRADE/PARAPET.

IF THERE IS NO BALUSTRADE/PARAPET THEN THEY ARE TO BE INSCRIBED ON THE OUTSIDE OF THE DECK ON THE LEFT HAND APPROACH SIDES.

THE STRUCTURE NUMBERS SHALL BE POSITIONED 100mm FROM THE TOP OF THE BALUSTRADE/ PARAPET (OR IN THE CENTRE OF THE DECK IF IT IS LESS THAN 500mm HIGH) AND 1000mm FROM THE END. THE YEAR SHALL BE POSITIONED CENTRALLY WITH RESPECT TO THE BRIDGE NUMBER

THE FIGURES OF THE STRUCTURE NUMBER SHALL BE 105mm HIGH AND THE FIGURES FOR THE YEAR OF CONSTRUCTION THE SHALL BE 75mm AND IN ACCORDANCE WITH SARTSM - VOL 4, DIN 1451 "B", NEATLY SPACED IN A STRAIGHT LINE AND LET 6mm INTO THE CONCRETE BY USING SUITABLY RAISED BLOCK FIGURES FIXED ON A 6mm THICK RECESSED PLATE ON THE FORMWORK. AFTER CURING OF THE CONCRETE, THE FIGURE RECESSES COMPRISING THE TWO NUMBERS ONLY, SHALL BE PICKED OUT WITH BLACK ENAMEL PAINT.

2. CULVERTS

LOOKING AT THE HEADWALLS FROM THE OUTSIDE, THE CULVERT NUMBER AND YEAR OF CONSTRUCTION SHALL BE INSCRIBED ON THE RIGHT HAND SIDE OF EACH HEADWALL, 250mm AWAY FROM THE START OF THE WINGWALL/RETURNWALL AND PLACED IN THE CENTRE IF THE HEIGHT IS LESS THAN 500mm. IF THE HEIGHT IS GREATER THAN 500mm THEN IT SHALL BE PLACED 350mm FROM THE BOTTOM OF THE HEADWALL. THE YEAR SHALL BE POSITIONED CENTRALLY WITH RESPECT TO THE CULVERT NUMBER.

THE FIGURES SHALL BE 75mm HIGH AND THE FIGURES FOR THE YEAR OF CONSTRUCTION SHALL BE 50mm IN ACCORDANCE WITH SARTSM - VOLUME 4, DIN 1451 "B", NEATLY SPACED IN A STRAIGHT LINE AND LET 6mm INTO THE CONCRETE BY USING SUITABLY RAISED BLOCK FIGURES FIXED ON A 6mm THICK RECESSED PLATE ON THE FORMWORK. AFTER CURING OF THE CONCRETE, THE FIGURE RECESSES COMPRISING THE TWO NUMBERS ONLY, SHALL BE PICKED OUT WITH BLACK ENAMEL PAINT.

3. CAUSEWAYS

LOOKING AT THE 200mm ROAD SLAB FROM THE OUTSIDE, THE CAUSEWAY NUMBER SHALL BE INSCRIBED ON THE RIGHT HAND SIDE OF EACH SIDE OF THE 200mm ROAD SLAB, 250mm AWAY FROM THE START OF THE RETURNWALL AND PLACED IN THE CENTRE OF THE ROAD SLAB.

THE FIGURES SHALL BE 40mm HIGH AND THE FIGURES FOR THE YEAR OF CONSTRUCTION SHALL BE 25mm IN ACCORDANCE WITH SARTSM - VOLUME 4 TABLE 11.15, DIN 1451 "B", NEATLY SPACED IN A STRAIGHT LINE AND LET 6mm INTO THE CONCRETE BY USING SUITABLY RAISED BLOCK FIGURES FIXED ON A 6mm THICK RECESSED PLATE ON THE FORMWORK. AFTER CURING OF THE CONCRETE, THE FIGURE RECESSES COMPRISING THE TWO NUMBERS ONLY, SHALL BE PICKED OUT WITH BLACK ENAMEL PAINT.

IN EXCEPTIONAL CASES NUMBER TO BE PROVIDED ON LEFT AND RIGHT GUIDE BLOCKS OUTER FACES AT EACH END (FOUR NUMBERS IN TOTAL).

FOR CAUSEWAYS CAST IN-SITU AS PER WCS/60/7/D1 TO D4, DETAIL 2 - CULVERTS MAY BE USED FOR THE STRUCTURE NUMBER.

No.	DATE	ADDITIONS AND AMENDMENTS
0	OCT - 2023	ORIGINAL VERSION

STANDARD PLANS

WESTERN CAPE GOVERNMENT
DEPARTMENT OF INFRASTRUCTURE
TRANSPORT INFRASTRUCTURE BRANCH

STRUCTURE NUMBERING

STRUCTURE NUMBER FOR BRIDGES, CULVERTS AND CAUSEWAYS

SCALE : N.T.S.

A2 ORIGINAL

INDEX NO. WCS/60/8/D1

PLAN NO. SHEET 1 OF 4

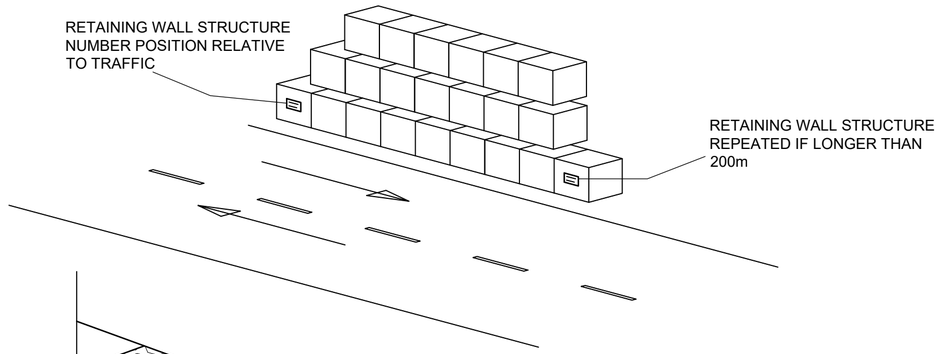

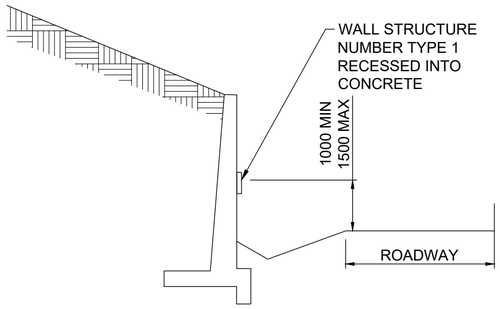

POSITIONING ON CONCRETE RETAINING WALLS

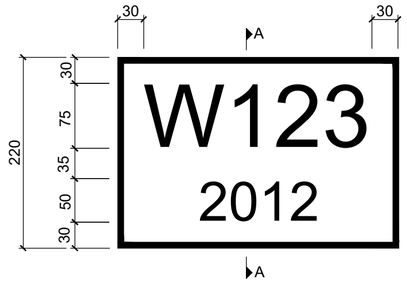

WALL STRUCTURE NUMBER DIMENSIONS

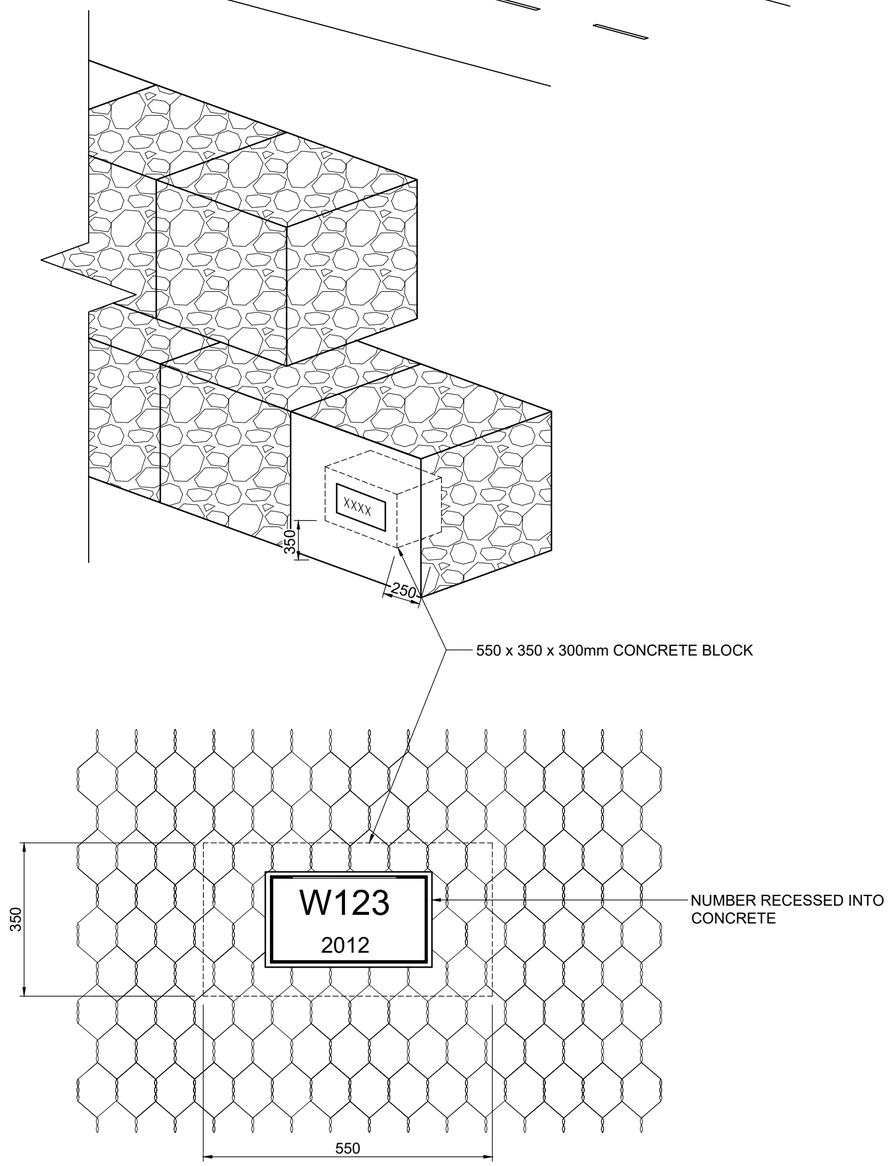

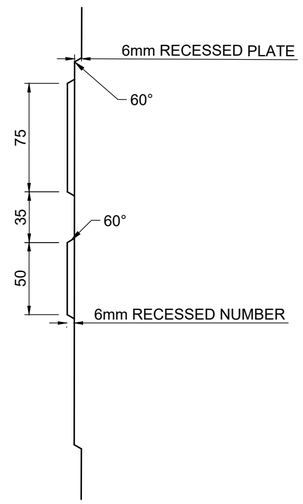

SECTION A-A

NOTES:

LOOKING AT THE WALLS FROM THE OUTSIDE, THE WALL NUMBER AND YEAR OF CONSTRUCTION SHALL BE INSCRIBED AT THE START OF THE WALL (AND REPEATED AT THE END IF WALL IS LONGER THAN 200m) OF EACH WALL, 250mm AWAY FROM THE START OF THE WALL. FOR GABION WALLS IT SHALL BE 350mm FROM THE BOTTOM OF THE WALL. FOR CONCRETE RETAINING WALL IT SHALL BE A HEIGHT BETWEEN A MINIMUM OF 1000mm AND A MAXIMUM OF 1500mm FROM THE EDGE OF THE ROADWAY. THE YEAR SHALL BE POSITIONED CENTRALLY WITH RESPECT TO THE WALL NUMBER.

THE FIGURES SHALL BE 75mm HIGH AND THE FIGURES FOR THE YEAR OF CONSTRUCTION SHALL BE 50mm IN ACCORDANCE WITH SARTSM - VOLUME 4, DIN 1451 "B", NEATLY SPACED IN A STRAIGHT LINE AND LET 6mm INTO THE CONCRETE BY USING SUITABLY RAISED BLOCK FIGURES FIXED ON A 6mm THICK RECESSED PLATE ON THE FORMWORK. AFTER CURING OF THE CONCRETE, THE FIGURE RECESSES COMPRISING THE TWO NUMBERS ONLY, SHALL BE PICKED OUT WITH BLACK ENAMEL PAINT.

1. (r/R) = WIDTH OF NUMERALS
2. (t/T) = SPACING BETWEEN NUMERALS
3. THE LETTER HEIGHT DIVIDED BY 7 GIVES THE LETTER STROKE WIDTH FOR EACH LETTER SIZE.
4. NUMBER SPACING - SEE TABLE BELOW:

WIDTH (r/R) AND SPACING (t/T) OF NUMERALS											
NUMERALS	r / R	(t/T) SPACING BETWEEN NUMERALS									
		0	1	2	3	4	5	6	7	8	9
0	28 / 44	38 / 59	38 / 59	38 / 59	36 / 56	36 / 56	37 / 58	36 / 56	37 / 58	37 / 58	36 / 56
1	14 / 22	25 / 40	26 / 41	25 / 40	25 / 40	25 / 39	25 / 40	25 / 40	25 / 40	25 / 40	25 / 40
2	28 / 44	37 / 58	38 / 59	37 / 58	37 / 56	37 / 58	37 / 58	36 / 56	37 / 58	36 / 56	37 / 58
3	29 / 45	37 / 58	37 / 58	37 / 58	36 / 56	36 / 56	37 / 58	36 / 56	37 / 58	36 / 56	36 / 56
4	32 / 50	39 / 62	40 / 63	40 / 63	39 / 62	39 / 61	40 / 63	39 / 62	39 / 61	39 / 62	39 / 62
5	28 / 44	37 / 58	39 / 61	37 / 58	36 / 56	36 / 56	38 / 59	37 / 58	37 / 58	37 / 58	36 / 56
6	28 / 44	37 / 58	36 / 56	37 / 58	35 / 55	36 / 56	37 / 58	37 / 58	36 / 56	37 / 58	36 / 56
7	28 / 44	36 / 56	38 / 59	35 / 55	34 / 54	32 / 50	37 / 58	32 / 51	36 / 56	34 / 54	35 / 55
8	30 / 47	39 / 61	39 / 61	39 / 61	37 / 58	38 / 59	39 / 61	38 / 59	38 / 59	38 / 59	38 / 59
9	28 / 44	36 / 56	37 / 58	37 / 58	35 / 55	32 / 51	36 / 56	34 / 54	36 / 56	35 / 55	36 / 56

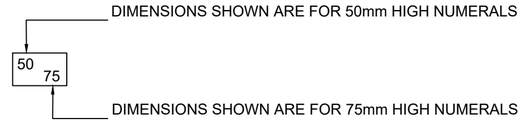

No.	DATE	ADDITIONS AND AMENDMENTS
0	OCT - 2023	ORIGINAL VERSION

STANDARD PLANS

WESTERN CAPE GOVERNMENT
DEPARTMENT OF INFRASTRUCTURE
TRANSPORT INFRASTRUCTURE BRANCH

STRUCTURE NUMBERING

STRUCTURE NUMBER FOR WALLS - GABIONS AND CONCRETE

SCALE : N.T.S.

A2 ORIGINAL

INDEX NO.
WCS/60/8/D2

PLAN NO.
SHEET 2 OF 4

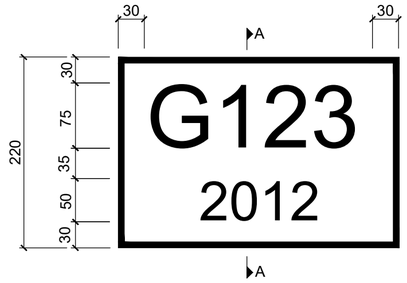

RECESSED NUMBER

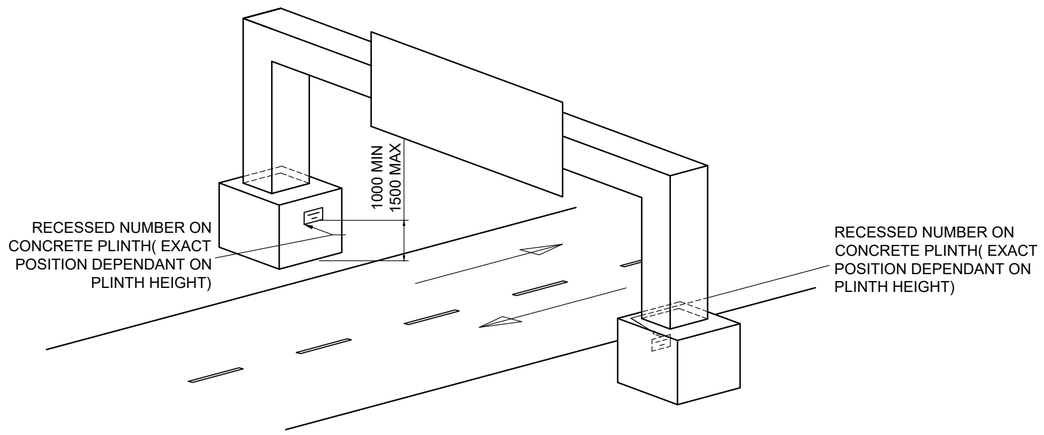

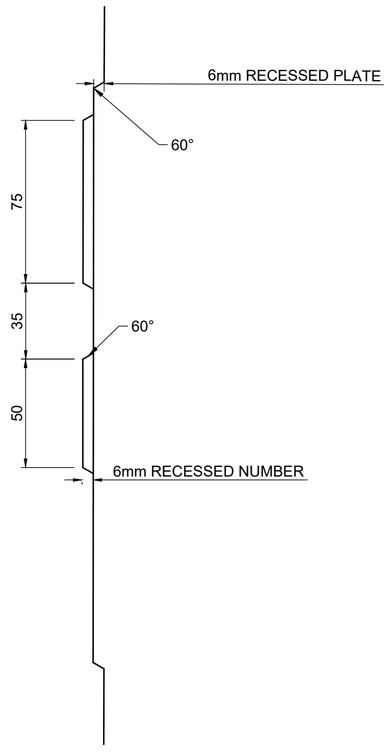

SECTION A-A

NOTES:

REFER TO WCS-60-8-D4 FOR POSITIONING OF GANTRY STRUCTURE NUMBERS

THE FIGURES SHALL BE 75mm HIGH AND THE FIGURES FOR THE YEAR OF CONSTRUCTION SHALL BE 50mm IN ACCORDANCE WITH SARTSM - VOLUME 4, DIN 1451 "B", NEATLY SPACED IN A STRAIGHT LINE AND LET 6mm INTO THE CONCRETE BY USING SUITABLY RAISED BLOCK FIGURES FIXED ON A 6mm THICK RECESSED PLATE ON THE FORMWORK. AFTER CURING OF THE CONCRETE, THE FIGURE RECESSES COMPRISING THE TWO NUMBERS ONLY, SHALL BE PICKED OUT WITH BLACK ENAMEL PAINT.

1. (r/R) = WIDTH OF NUMERALS
2. (t/T) = SPACING BETWEEN NUMERALS
3. THE LETTER HEIGHT DIVIDED BY 7 GIVES THE LETTER STROKE WIDTH FOR EACH LETTER SIZE.
4. NUMBER SPACING - SEE TABLE BELOW:

WIDTH (r/R) AND SPACING (t/T) OF NUMERALS											
NUMERALS	r / R	(t/T) SPACING BETWEEN NUMERALS									
		0	1	2	3	4	5	6	7	8	9
0	28 44	38 59	38 59	38 59	36 56	36 56	37 58	36 56	37 58	37 58	36 56
1	14 22	25 40	26 41	25 40	25 40	25 39	25 40	25 40	25 40	25 40	25 40
2	28 44	37 58	38 59	37 58	37 56	37 58	37 58	36 56	37 58	36 56	37 58
3	29 45	37 58	37 58	37 58	36 56	36 56	37 58	36 56	37 58	36 56	36 56
4	32 50	39 62	40 63	40 63	39 62	39 61	40 63	39 62	39 61	39 62	39 62
5	28 44	37 58	39 61	37 58	36 56	36 56	38 59	37 58	37 58	37 58	36 56
6	28 44	37 58	36 56	37 58	35 55	36 56	37 58	37 58	36 56	37 58	36 56
7	28 44	36 56	38 59	35 55	34 54	32 50	37 58	32 51	36 56	34 54	35 55
8	30 47	39 61	39 61	39 61	37 58	38 59	39 61	38 59	38 59	38 59	38 59
9	28 44	36 56	37 58	37 58	35 55	32 51	36 56	34 54	36 56	35 55	36 56

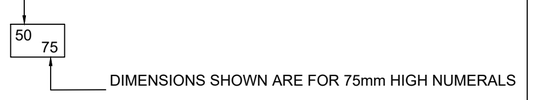

No.	DATE	ADDITIONS AND AMENDMENTS
0	OCT - 2023	ORIGINAL VERSION

STANDARD PLANS

WESTERN CAPE GOVERNMENT
DEPARTMENT OF INFRASTRUCTURE
TRANSPORT INFRASTRUCTURE BRANCH

STRUCTURE NUMBERING

STRUCTURE NUMBER FOR GANTRIES

SCALE : N.T.S.

A2 ORIGINAL

INDEX NO. WCS/60/8/D3

PLAN NO. SHEET 5 OF 9

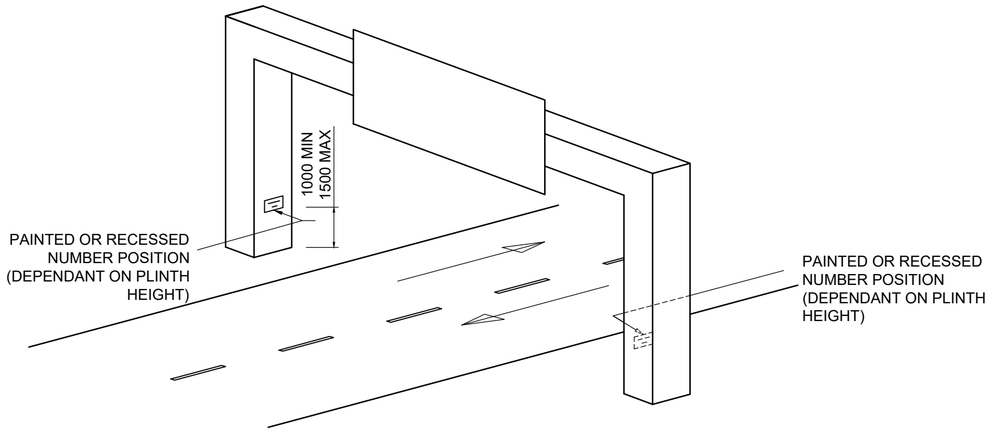

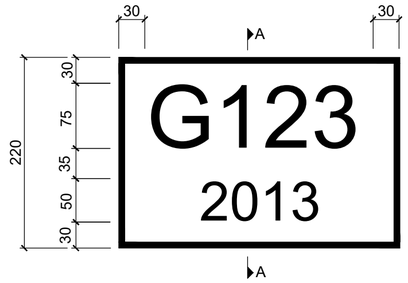

PAINTED NUMBER

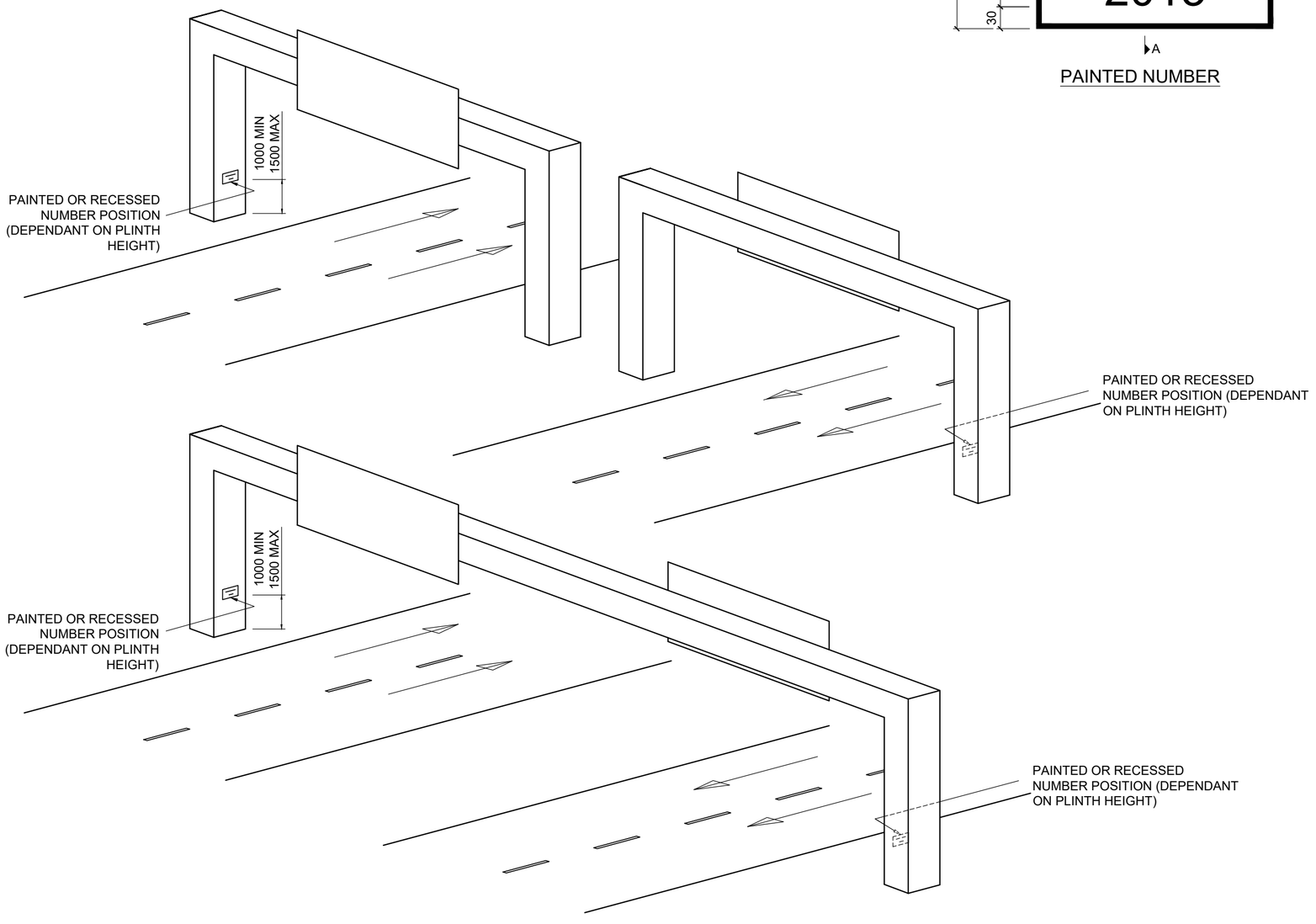

NOTES:

1. DRILLING OF HOLES, ETCHING OF TEXT, WELDING PRIOR TO GALVANIZING.
2. NUMBER PLATE TO BE HOT DIPPED GALVANIZED.
3. THE ETCHED FIGURES AND BORDER TO BE PICKED OUT WITH UV RESISTANT BLACK ENAMEL PAINT ON A WHITE BACKGROUND.
4. ONLY FOR RETROFITTING ON EXISTING STRUCTURES
5. (r/R) = WIDTH OF NUMERALS
6. (t/T) = SPACING BETWEEN NUMERALS
7. THE LETTER HEIGHT DIVIDED BY 7 GIVES THE LETTER STROKE WIDTH FOR EACH LETTER SIZE.
8. NUMBER SPACING - SEE TABLE BELOW:

WIDTH (r/R) AND SPACING (t/T) OF NUMERALS											
NUMERALS	r / R	(t/T) SPACING BETWEEN NUMERALS									
		0	1	2	3	4	5	6	7	8	9
0	28 / 44	38 / 59	38 / 59	38 / 59	36 / 56	36 / 56	37 / 58	36 / 56	37 / 58	37 / 58	36 / 56
1	14 / 22	25 / 40	26 / 41	25 / 40	25 / 40	25 / 39	25 / 40	25 / 40	25 / 40	25 / 40	25 / 40
2	28 / 44	37 / 58	38 / 59	37 / 58	37 / 56	37 / 58	37 / 58	36 / 56	37 / 58	36 / 56	37 / 58
3	29 / 45	37 / 58	37 / 58	37 / 58	36 / 56	36 / 56	37 / 58	36 / 56	37 / 58	36 / 56	36 / 56
4	32 / 50	39 / 62	40 / 63	40 / 63	39 / 62	39 / 61	40 / 63	39 / 62	39 / 61	39 / 62	39 / 62
5	28 / 44	37 / 58	39 / 61	37 / 58	36 / 56	36 / 56	38 / 59	37 / 58	37 / 58	37 / 58	36 / 56
6	28 / 44	37 / 58	36 / 56	37 / 58	35 / 55	36 / 56	37 / 58	37 / 58	36 / 56	37 / 58	36 / 56
7	28 / 44	36 / 56	38 / 59	35 / 55	34 / 54	32 / 50	37 / 58	32 / 51	36 / 56	34 / 54	35 / 55
8	30 / 47	39 / 61	39 / 61	39 / 61	37 / 58	38 / 59	39 / 61	38 / 59	38 / 59	38 / 59	38 / 59
9	28 / 44	36 / 56	37 / 58	37 / 58	35 / 55	32 / 51	36 / 56	34 / 54	36 / 56	35 / 55	36 / 56

DIMENSIONS SHOWN ARE FOR 50mm HIGH NUMERALS

50 / 75

DIMENSIONS SHOWN ARE FOR 75mm HIGH NUMERALS

No.	DATE	ADDITIONS AND AMENDMENTS
0	OCT - 2023	ORIGINAL VERSION

STANDARD PLANS

WESTERN CAPE GOVERNMENT
DEPARTMENT OF INFRASTRUCTURE
TRANSPORT INFRASTRUCTURE BRANCH

STRUCTURE NUMBERING

STRUCTURE NUMBER FOR GANTRIES PAINTED

SCALE : N.T.S.

A2 ORIGINAL

INDEX NO.
WCS/60/8/D4

PLAN NO.
SHEET 4 OF 4

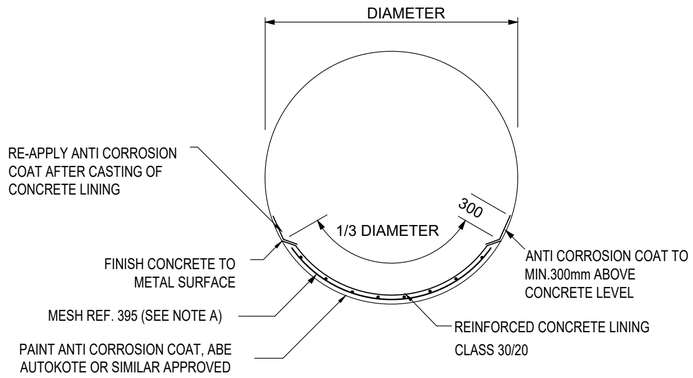

TYPICAL REINFORCED CONCRETE LINING FOR CIRCULAR ARMCO PIPE

FIGURE 1

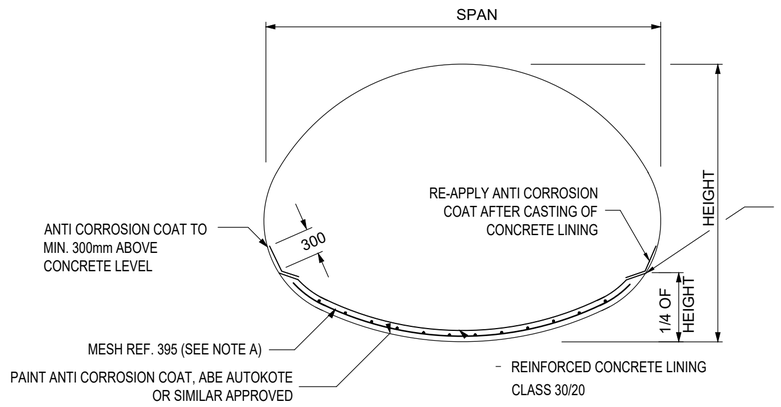

TYPICAL REINFORCED CONCRETE LINING FOR OVAL ARMCO PIPE

FIGURE 2

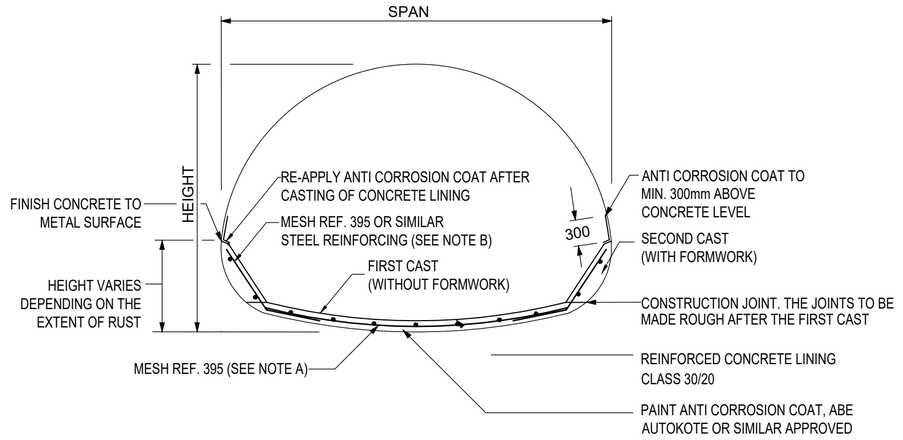

TYPICAL REINFORCED CONCRETE INVERT LINING FOR FOR ARMCO PIPES WHERE RUST OCCURS HIGHER UP ON THE ARMCO WALLS OR WHERE THE ARMCO WALLS BECOME TOO STEEP FOR CASTING IN ONE STAGE.

FIGURE 3

APPLY REPAIRS IN MAX. LENGTH 1/3 OF THE STRUCTURE LENGTH AT A TIME, ALTERNATIVELY PROPS MAY BE REQUIRED WITH APPROVAL FROM ENGINEER.

NOTES :

A. THE STEEL MESH TO BE BENT ON SITE TO SUIT THE ARMCO DIMENSIONS. IN CASES WHERE THE STEEL MESH CANNOT BE BENT TO THE ARMCO DIMENSIONS, THEN NORMAL STEEL REINFORCEMENT BARS TO BE USED EQUIVALENT TO THAT OF THE PRESCRIBED STEEL MESH.

B. THE REINFORCEMENT STEEL TO BE ANCHORED TO THE ARMCO BY MEANS OF WELDING ANCHOR STEEL TO THE EXISTING ARMCO BOLTS (SEE FIGURE 5). IN THE TRANSVERSE DIRECTION THE REINFORCEMENT MUST BE ANCHORED INTO THE FLOOR SECTION (FIRST CAST) BY 500mm MINIMUM.

C. THE FLOOR SLAB TO BE CAST IN SECTIONS WHERE BEDDING MATERIAL IS REPLACED WITH CONCRETE (FIGURE 4).

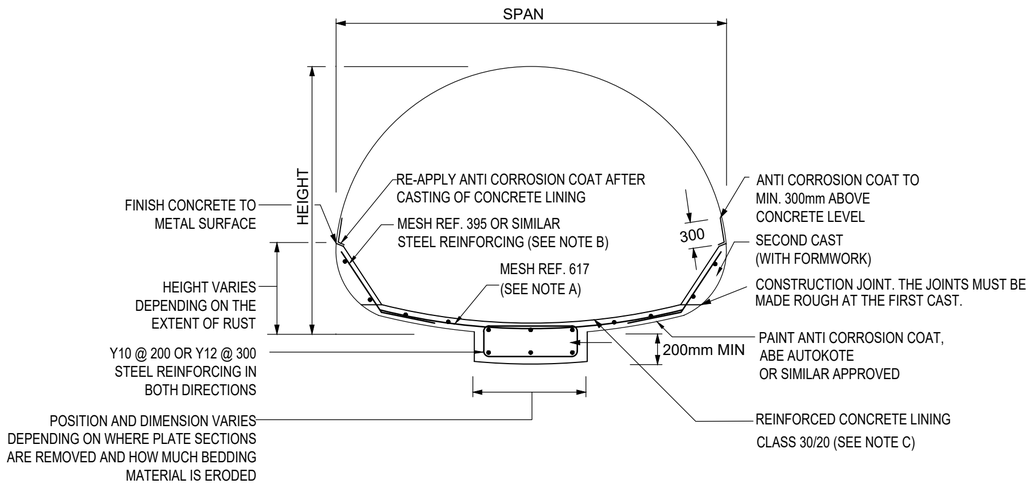

TYPICAL REINFORCED CONCRETE INVERT LINING FOR CASES WITH EXTREME CORROSION WHERE SECTIONS OF THE INVERT STEEL PLATE IS REMOVED AND BEDDING MATERIAL IS ERODED.

FIGURE 4

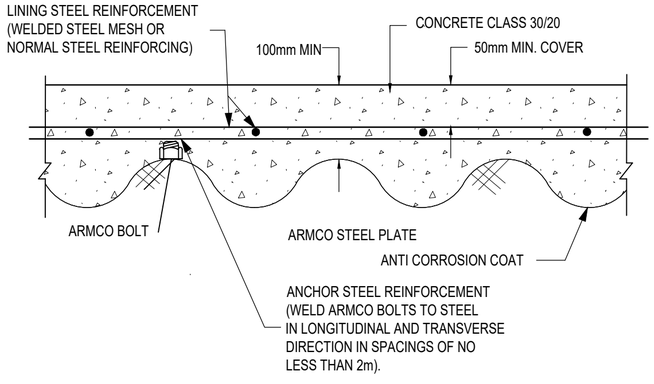

LONGITUDINAL SECTION THROUGH CONCRETE INVERT LINING

FIGURE 5

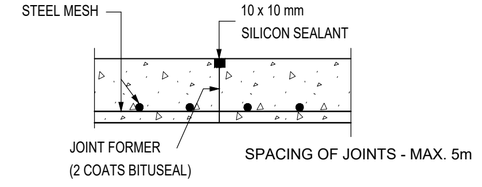

BUTT JOINT

FIGURE 6

No.	DATE	ADDITIONS AND AMENDMENTS
0	OCT - 2023	ORIGINAL VERSION

STANDARD PLANS

WESTERN CAPE GOVERNMENT
DEPARTMENT OF INFRASTRUCTURE
TRANSPORT INFRASTRUCTURE BRANCH

STRUCTURE REHABILITATION

CORRUGATED METAL CULVERT INVERT LINING

SCALE : N.T.S.

A2 ORIGINAL

INDEX NO.
WCS/60/9/D1

PLAN NO.
SHEET 1 OF 7

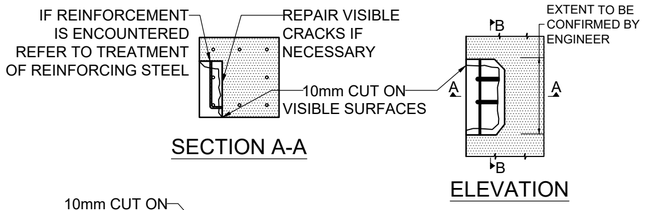

DETAIL 1A: STANDARD SPALL REPAIR - TYPICAL MEMBER

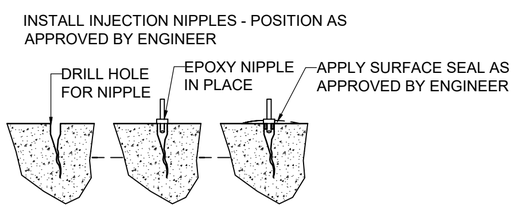

PREPARATION OF REPAIR SURFACE

NOTE:

1) START AT ONE END OF CRACK WITH INJECTION.
2) START INJECTING AT LOWEST POINT.
3) INJECT UNTIL CONSTANT FLOW OF EPOXY IS VISIBLE AT THE NEXT NIPPLE.
4) CLOSE CURRENT NIPPLE AND PROCEED TO NEXT NIPPLE.
5) WHEN COMPLETE, GRIND OFF NIPPLES AND SURFACE EPOXY SEAL.
6) ALL ADDITIONAL INSTRUCTIONS FROM ENGINEER TO FOLLOWED AND ANY FURTHER REQUIREMENTS AS PER SUPPLIERS PRODUCT MANUAL INSTRUCTIONS.

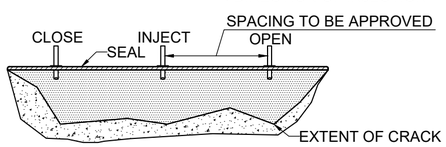

INJECTION

DETAIL 2: TYPICAL CRACK REPAIR (FOR CRACKS < 2.5mm)

STEP 1

REMOVE LOOSE OR DELAMINATED CONCRETE AND/OR CONCRETE AREAS IDENTIFIED BY ENGINEER.

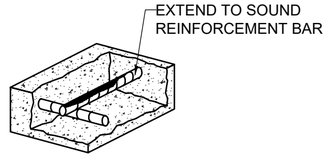

STEP 2

SAW CUT REPAIR PERIMETER TO 10mm DEEP AT RIGHT ANGLES & REMOVE CONCRETE AREAS IDENTIFIED BY ENGINEER.

EXTENT OF EXPOSURE OF REINFORCEMENT
-SAW CUT 50mm BEYOND RUSTED AREAS
-EXPOSE FULL PERIMETER OF REINFORCING BARS

STEP 3

ALL HEAVY CORROSION AND SCALE TO BE REMOVED USING HYDROJETTING (WITH GRIT) OR OTHER APPROVED METHOD TO EXPOSE SOUND METAL.

NOTE
IF SECONDARY REINFORCEMENT STEEL HAS LOST MORE THAN 15% OF DIAMETER OR IF MAIN REINFORCEMENT STEEL HAS LOST MORE THAN 5% OF DIAMETER THEN A STRUCTURAL ENGINEER SHOULD BE CONSULTED TO ADVISE ON THE ADDITION OF SUPPLEMENTAL REINFORCEMENT.

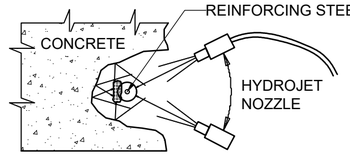

STEP 4

APPLY ANTI-CORROSIVE COATING (SIKATOP-ARMATEC 110 EPOCEM OR APPROVED EQUIVALENT) TO THE SATISFACTION OF THE ENGINEER TO CLEANED AND DERUSTED REINFORCING STEEL.

DETAIL 1B: TREATMENT OF REINFORCING STEEL

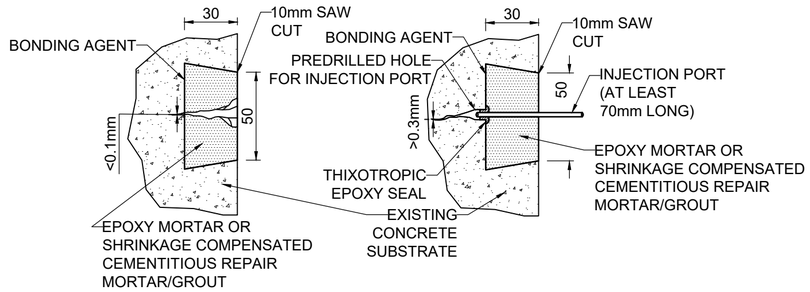

3.1 SURFACE CRACK

3.2 PENETRATING CRACK

DETAIL 3: CRACK REPAIR DETAIL (LARGE STABLE CRACKS > 2.5mm)

GENERAL NOTES (EXAMPLE)

1. ALL CONCRETE SURFACE TO BE INSPECTED IN CONJUNCTION WITH THE ENGINEERS REPRESENTATIVE TO IDENTIFY AND MARK-OUT ALL CRACKS EXCEEDING 0.3mm IN WIDTH.

2. THE EXISTING BRIDGES ARE IN FAIR TO GOOD CONDITION. EXCEPT FOR LOCAL EFFECTS AND ACCIDENT DAMAGES. THE BRIDGES IN STRUCTURAL SOUND CONDITION.

3. MATERIALS:
   3.1. PROPRIETARY REPAIR MATERIAL TO BE USED ACCORDING TO THE MANUFACTURER'S REQUIREMENTS.

   3.2. METHOD STATEMENT FOR OLD TO NEW CONCRETE TO BE APPROVED BY ENGINEER.

4. TYPICAL REPAIR WORKS:
   4.1. CONCRETE CRACKS IN SUBSTRUCTURE TO BE REPAIRED WITH APPROVED REPAIR SYSTEM.

   4.2. ASPHALT ON BRIDGE DECKS TO BE REMOVED BY MEANS OF MILLING MACHINE AND REPLACED WITH 50mm ASPHALT.

   4.3. BRIDGE APPROACH ASPHALT TO BE REMOVED BY MEANS OF MILLING MACHINE AND REPLACED WITH 50mm ASPHALT.

   4.4. BALUSTRADES:
   RETAIN EXISTING BALUSTRADES. EXTENSIVE CONCRETE REPAIRS REQUIRED FOR SOME BALUSTRADES. FOR REPLACEMENT OF SOME ELEMENTS AS REQUIRED REFER TO WCS-60-9-D4. CLEAN BALUSTRADES BY MEANS OF HIGH PRESSURE WATER JETTING. PROTECTIVE COATING TO BE APPLIED ONTO COMPLETED BALUSTRADE AFTER CONCRETE REPAIRS. THE COLOUR OF THE PROTECTIVE COATING TO BE GREY.

   4.5. NEW BRIDGE EXPANSION JOINTS TO BE INSTALLED AFTER REPLACING OF ASPHALT. TYPE OF JOINT TO BE ACCORDING TO REPAIR SCHEDULE. EXPANSION JOINTS IN SIDEWALKS TO BE WITH POLYSULPHIDE SEALANT.

RECOMMENDED PRODUCT TABLE

TYPICAL APPLICATION	DESCRIPTION	SUGGESTED PRODUCT*
ANTI-CORROSIVE COATING FOR STEEL	TO 2mm THICK	SIKATOP-ARMATEC 110 EC
BONDING AGENT (WET TO DRY)	TO 2mm THICK	SIKAMINOTOP 1010
PORE SEALER AND LEVELING COMPOUND	1.5mm TO 5.0mm THICK	SIKAMONOTOP 3020
POURABLE GROUT MIX	UP TO 100mm THICK	SIKA GROUT 212
	UP TO 200mm THICK	SIKACRETE 214
CEMENTITIOUS REPAIR MORTAR	GENERAL USE (PARTICULARY VERTICAL & OVERHEAD SURFACES) 10 T0 50mm THICK	SIKA REP LW
POLYMER MODIFIED REPAIR MORTAR	VERTICAL AND OVERHEAD SURFACES IN LAYERS 5-70mm	SIKAMONOTOP 4012
	HORIZONTAL SURFACES IN LAYERS 5-30mm THICK	SIKAMONOTOP 412 NFG
MICRO CONCRETE REPAIR MIX	HORIZONTAL SURFACES IN LAYERS 30-200mm THICK	SIKACRETE 214
CAULKING MIX	GENERAL USE , UP TO 100mm THICK	SIKA GROUT 212
	BRIDGE BEARINGS	SIKADUR 43 ZA
GROUTING OF DOWEL BARS AND ANCHORS	HORIZONTAL HOLES & OVERHEAD SURFACES	SIKA ANCHORFIX 2+
	VERTICAL HOLES	SIKADUR 23N, SIKADUR 42 ZA
PROTECTIVE COATING	WATER REPELLANT FOR ASR-AFFECTED STRUCTURES (1 COAT)	SIKAGARD 706W THIXO
	TO 2mm THICK. EXPOSURE ENVIROMENT MUST ALLOW AIR CURING OF THIS COATING	SIKA TOP-SEAL 107
	PLASTIC-ELASTIC PROTECTIVE COATING (2 COATS)	SIKAGARD 550W ELASTIC (+PRIMER)
CRACK INJECTION	LOW VISCOSITY EPOXY	SIKADUR 52 ZA
CURING COMPOUND	RESIN BASED COVERAGE OF 5m²	SIKA ANTISOL 15
SILICONE SEALANT	POLYSULPHIDE SEALANT	DOW COMING 888

*OR SIMILAR APPROVED

STRUCTURE DEFECTS & REPAIR TABLE EXAMPLE (ALWAYS TO BE INCLUDED WITH STRUCTURES THESE DETAILS ARE APPLICABLE TO)

FOR BRIDGE AND MAJOR CULVERT SEPARATE DETAILED DRAWINGS SHOWING THE LOCATION AND EXTENT OF VARIOUS DEFECTS WILL BE REQUIRED, REFER TO STANDARD PLANS WCS/60/9/D5 AND D6 RESPECTIVELY FOR EXAMPLE DRAWINGS FOR BRIDGE AND MAJOR CULVERTS.

BRIDGE DEFECTS	REPAIR ACTION	STRUCTURE NUMBER STRUCTURE NAME ROAD NUMBER KM DISTANCE	STRUCTURE NUMBER STRUCTURE NAME ROAD NUMBER KM DISTANCE	STRUCTURE NUMBER STRUCTURE NAME ROAD NUMBER KM DISTANCE	STRUCTURE NUMBER STRUCTURE NAME ROAD NUMBER KM DISTANCE	STRUCTURE NUMBER STRUCTURE NAME ROAD NUMBER KM DISTANCE
DAMAGED CONCRETE SPALLING AND EXPOSED REINFORCEMENT	REFER TO DETAIL 1	✓	✓	✓		✓
SMALL CRACKING (<2.5mm)	REFER TO DETAIL 2	✓	✓		✓	
LARGE CRACKING (>2.5mm)	REFER TO DETAIL 3	✓	✓		✓	
STRENGTHENING REQUIRED	REFER TO DRAWING 102686/815/B4677/01					
HONEYCOMBING	HONEYCOMBING TO BE WATER JETTED AND COATED WITH 3 LAYERS OF EPOXY	✓	✓			✓

No.	DATE	ADDITIONS AND AMENDMENTS
0	OCT - 2023	ORIGINAL VERSION

STANDARD PLANS

WESTERN CAPE GOVERNMENT
DEPARTMENT OF INFRASTRUCTURE
TRANSPORT INFRASTRUCTURE BRANCH

STRUCTURE REHABILITATION

TYPICAL REPAIR METHODS 1 - CONCRETE

SCALE : N.T.S.

A2 ORIGINAL

INDEX NO. WCS/60/9/D2

PLAN NO. SHEET 2 OF 7

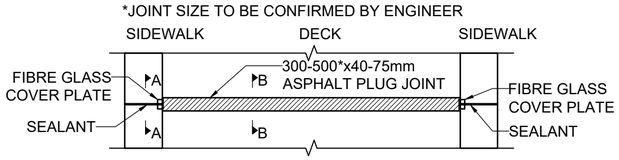

TYPICAL PLAN OF JOINT

PROCEDURE FOR REPLACEMENT OF THORMA JOINTS

1. REMOVE THE EXISTING EXPANSION JOINT AND COVER PLATES IF PROVIDED AND ESTABLISH THE PRESENCE AND DEPTH OF EXISTING REINFORCEMENT WITHIN THE CONFINES OF THE PROPOSED NEW THORMA JOINT.
2. SAW-CUT AND REMOVE A STRIP OF ASPHALT SURFACING AND/OR CONCRETE CENTRED OVER THE JOINT AND CORRESPONDING TO THE WIDTHS AND DEPTHS OF THE PROPOSED NEW THORMA JOINTS AS DETAILED ON THE DRAWINGS. THE NECESSARY PRECAUTION AND CARE SHALL BE EXERCISED NOT TO DAMAGE THE EXISTING REINFORCEMENT, STRUCTURAL MEMBERS, SERVICES AND SERVICE DUCTS DURING SAWI-CUTTING AND BREAKING OUT OF THE CONCRETE.
3. REMOVE AND REPAIR WEAK CONCRETE EXPOSED IN THE RECESSES FOR THE CONCRETE NOSING USING:
   I) PROPRIETARY GROUTS AND PATCHING COMPOUNDS
   II) CONCRETE CLASS 40/30
4. INSTALL THE THORMA JOINTS AS PER SUPPLIER INSTRUCTIONS. REFER TO DETAIL DRAWINGS.
5. FIT AND INSTALL COVER PLATES TO PARAPET. "LOCKTITE PRODUCT 242" OR SIMILAR APPROVED SHALL BE APPLIED TO ALL THE BOLD THREADS ON FINAL INSTALLATION OF THE COVER PLATES.

GENERAL NOTES (EXAMPLE)

1. ALL CONCRETE SURFACE TO BE INSPECTED IN CONJUNCTION WITH THE ENGINEERS REPRESENTATIVE TO IDENTIFY AND MARK-OUT ALL CRACKS EXCEEDING 0.3mm IN WIDTH.

2. THE EXISTING BRIDGES ARE IN FAIR TO GOOD CONDITION. EXCEPT FOR LOCAL EFFECTS AND ACCIDENT DAMAGES. THE BRIDGES IN STRUCTURAL SOUND CONDITION.

3. MATERIALS:
   3.1. PROPRIETARY REPAIR MATERIAL TO BE USED ACCORDING TO THE MANUFACTURER'S REQUIREMENTS.

   3.2. METHOD STATEMENT FOR OLD TO NEW CONCRETE TO BE APPROVED BY ENGINEER.

4. TYPICAL REPAIR WORKS:
   4.1. CONCRETE CRACKS IN SUBSTRUCTURE TO BE REPAIRED WITH APPROVED REPAIR SYSTEM.

   4.2. ASPHALT ON BRIDGE DECKS TO BE REMOVED BY MEANS OF MILLING MACHINE AND REPLACED WITH 50mm ASPHALT.

   4.3. BRIDGE APPROACH ASPHALT TO BE REMOVED BY MEANS OF MILLING MACHINE AND REPLACED WITH 50mm ASPHALT.

   4.4. BALUSTRADES:
   RETAIN EXISTING BALUSTRADES. EXTENSIVE CONCRETE REPAIRS REQUIRED FOR SOME BALUSTRADES. FOR REPLACEMENT OF SOME ELEMENTS AS REQUIRED REFER TO WCS-60-9-D4. CLEAN BALUSTRADES BY MEANS OF HIGH PRESSURE WATER JETTING. PROTECTIVE COATING TO BE APPLIED ONTO COMPLETED BALUSTRADE AFTER CONCRETE REPAIRS. THE COLOUR OF THE PROTECTIVE COATING TO BE GREY.

   4.5. NEW BRIDGE EXPANSION JOINTS TO BE INSTALLED AFTER REPLACING OF ASPHALT. TYPE OF JOINT TO BE ACCORDING TO REPAIR SCHEDULE. EXPANSION JOINTS IN SIDEWALKS TO BE WITH POLYSULPHIDE SEALANT.

SIDEWALK JOINT DATA				
JOINT SIZE	8	10	15	20
DEPTH 'D'	6	8	10	12
CHORD 'S' Ø	10	15	20	25

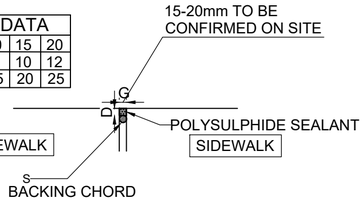

SECTION A-A SIDEWALK JOINT

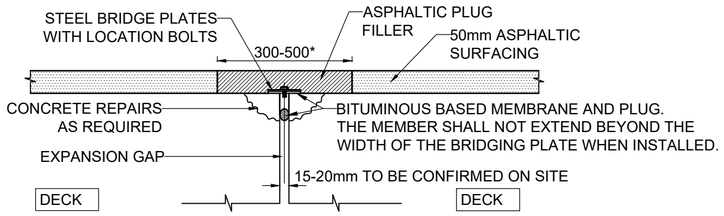

SECTION B-B DECK JOINT

*JOINT SIZE TO BE CONFIRMED BY ENGINEER

DETAIL 4: ASPHALTIC PLUG JOINT DETAILS

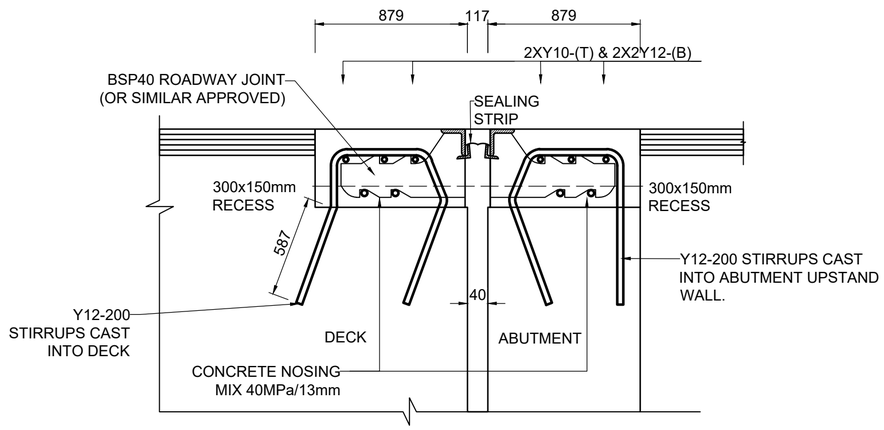

DETAIL 5: EXPANSION JOINT (BSP40 OR SIMILAR APPROVED)

INSTALL THE JOINTS AS PER SUPPLIER INSTRUCTIONS. REFER TO DETAIL DRAWINGS

STRUCTURE DEFECTS & REPAIR TABLE EXAMPLE (ALWAYS TO BE INCLUDED WITH STRUCTURES THESE DETAILS ARE APPLICABLE TO)

BRIDGE DEFECTS	REPAIR ACTION	STRUCTURE NUMBER STRUCTURE NAME ROAD NUMBER KM DISTANCE	STRUCTURE NUMBER STRUCTURE NAME ROAD NUMBER KM DISTANCE	STRUCTURE NUMBER STRUCTURE NAME ROAD NUMBER KM DISTANCE	STRUCTURE NUMBER STRUCTURE NAME ROAD NUMBER KM DISTANCE	STRUCTURE NUMBER STRUCTURE NAME ROAD NUMBER KM DISTANCE
DAMAGED EXPANSION JOINTS	CONSTRUCT NEW ASPHALTIC PLUG JOINT (THORMA OR SIMILAR APPROVED) REFER TO DETAIL 4					✓
DAMAGED EXPANSION JOINTS	REMOVE EXISTING EXPANSION JOINT AND CONSTRUCT NEW (GLACIER S40 OR SIMILAR APPROVED) REFER TO DETAIL 5	✓	✓			
DAMAGED GUARDRAIL	REPAIR OR REPLACE AS PER STANDARD DRAWING WCS/54/1/C4 AND WCS/45/1/C5 STANDARD	✓				✓
DANGER PLATES	ERECT DANGER PLATES AS PER STANDARD DRAWING WCS/56/1/C6				✓	
BRIDGE NUMBER	MOUNT BRIDGE NUMBER PLATE				✓	
SURFACE DEFECTS	MILL AND REPLACE ASPHALT SURFACING	✓	✓			✓
EROSION	PLACE GABION MATTRESSES AS EROSION PROTECTION (REFER TO STANDARD DRAWINGS WCS/52/1/C1 AND WCS/52/1/C2)			✓		✓

FOR BRIDGE AND MAJOR CULVERT SEPARATE DETAILED DRAWINGS SHOWING THE LOCATION AND EXTENT OF VARIOUS DEFECTS WILL BE REQUIRED, REFER TO STANDARD PLANS WCS/90/9/D5 AND D6 RESPECTIVELY FOR EXAMPLE DRAWINGS FOR BRIDGE AND MAJOR CULVERTS

No.	DATE	ADDITIONS AND AMENDMENTS
0	OCT - 2023	ORIGINAL VERSION

STANDARD PLANS

WESTERN CAPE GOVERNMENT
DEPARTMENT OF INFRASTRUCTURE
TRANSPORT INFRASTRUCTURE BRANCH

STRUCTURE REHABILITATION

TYPICAL REPAIR METHODS 2 - JOINTS

SCALE : N.T.S.

A2 ORIGINAL

INDEX NO. WCS/60/9/D3

PLAN NO. SHEET 3 OF 7

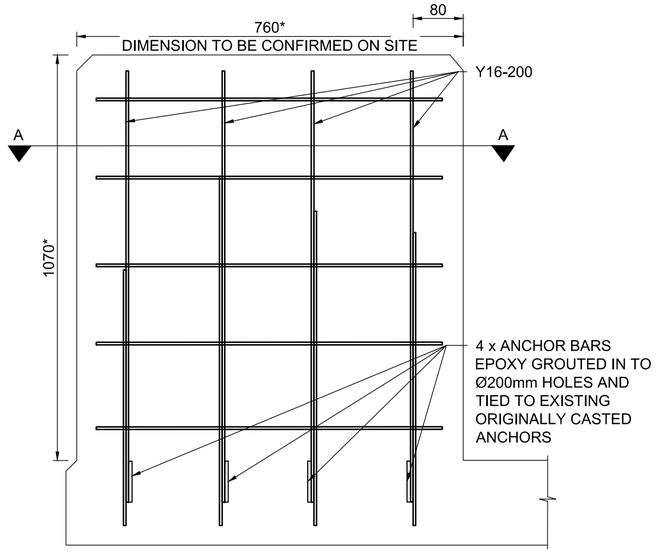

ELEVATION OF END PANEL

SCALE 1:20

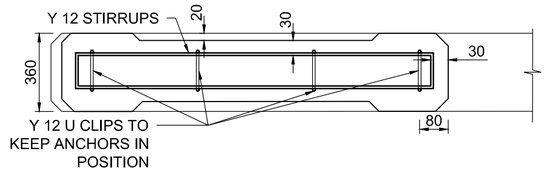

SECTION A-A

SCALE 1:20

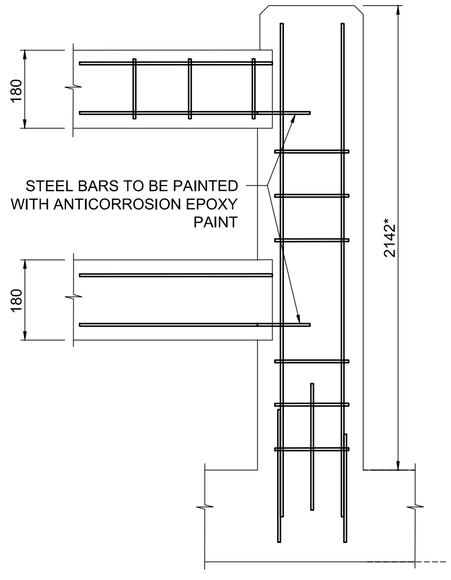

ELEVATION OF POST SECTION FIXED END POST

SCALE 1:20

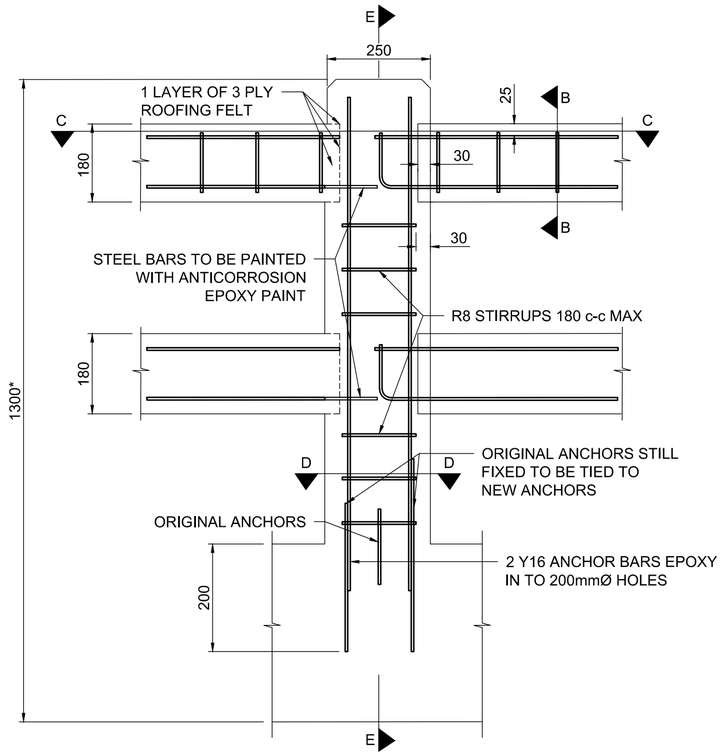

ELEVATION OF POST AND RAIL FIXED AND NON-FIXED POST

SCALE 1:20

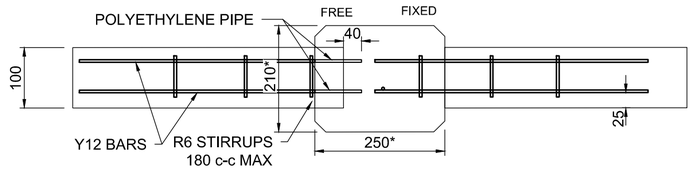

SECTION C-C

PLAN POST AND RAIL

SCALE 1:20

*DIMENSIONS ARE TO BE CONFIRMED IN SITE

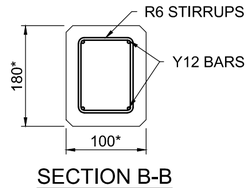

SECTION B-B

RAIL

*DIMENSIONS ARE TO BE CONFIRMED ON SITE

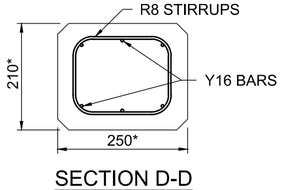

SECTION D-D

POST

*DIMENSIONS ARE TO BE CONFIRMED ON SITE

NOTES:

1. ALL EXPOSED SHARP EDGES TO HAVE 20 x 20mm CHAMFERS.
2. 30mm CLEAR COVER TO REINFORCEMENT UNLESS OTHERWISE STATED.
3. BALUSTRADE CONCRETE : CLASS 40/14.
4. ALL BALUSTRADE REINFORCEMENT SHALL BE HEAVY DUTY HOT-DIP GALVANIZED WITH AN 85 MICRON COATING IN ACCORDANCE WITH SANS 121:200.
5. IF BALUSTRADE RAILS ARE TO BE PRE-CAST, IT SHOULD BE CAST AT LEAST 14 DAYS PRIOR TO INSTALLATION.
6. PAINT THE BALUSTRADE WITH ONE COAT OF PRIMER AND TWO COATS OF WHITE SATIN ACRYLIC PAINT AFTER CONCRETE HAS SET FOR 28 DAYS.
7. FOR CAST IN-SITU BALUSTRADES TYPE A TO D, REFER TO WCS-60-2 SERIES FOR DETAILS.

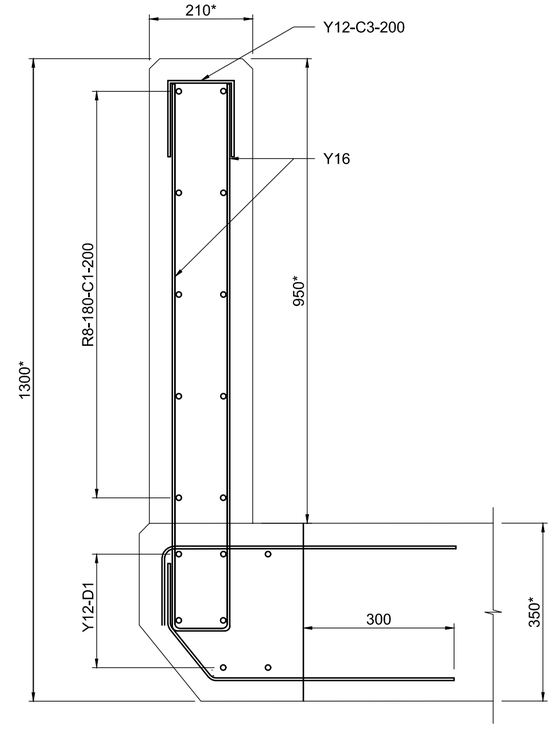

SECTION E-E

SCALE 1:20

*DIMENSIONS ARE TO BE CONFIRMED ON SITE

No.	DATE	ADDITIONS AND AMENDMENTS
0	OCT - 2023	ORIGINAL VERSION

STANDARD PLANS

WESTERN CAPE GOVERNMENT
DEPARTMENT OF INFRASTRUCTURE
TRANSPORT INFRASTRUCTURE BRANCH

STRUCTURE REHABILITATION

POST AND RAIL BALUSTRADE REPAIR DETAILS

SCALE : N.T.S.

A2 ORIGINAL

INDEX NO. WCS/60/9/D4

PLAN NO. SHEET 4 OF 7

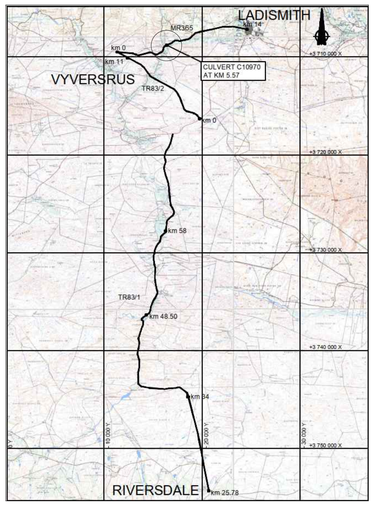

LOCALITY PLAN
SCALE 1:50 000

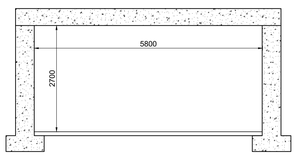

SECTON B-B
SCALE 1:50

PLAN SECTION TAKEN FROM RECORD DRAWINGS OR SKETCHED OUT DIAGRAMMATICALLY TO SHOW EXTENT AND LOCATION OF DEFECTS.

TYPICAL CROSS SECTION TAKEN FROM RECORD DRAWINGS OR SKETCHED OUT DIAGRAMMATICALLY TO SHOW EXTENT AND LOCATION OF DEFECTS.

NOTE:
ALL EXISTING STRUCTURE DIMENSIONS AND LEVELS TO BE VERIFIED ON SITE PRIOR TO COMMENCEMENT OF ANY WORKS. ANY DISCREPANCIES TO BE BROUGHT TO THE ATTENTION OF THE ENGINEER.

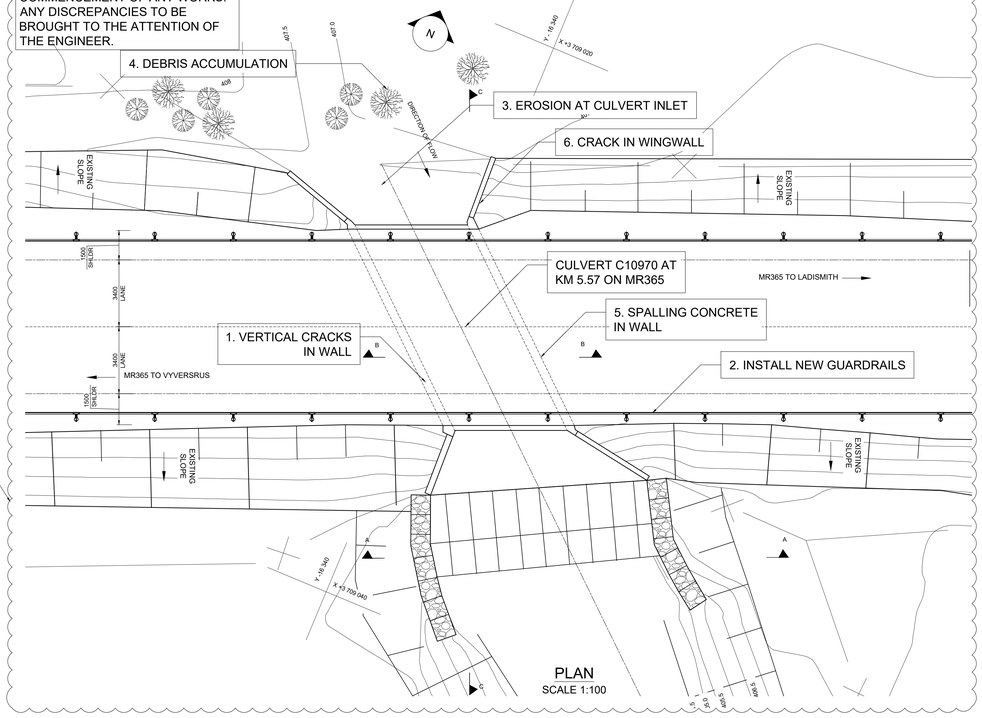

PLAN
SCALE 1:100

TYPICAL NOTES

REHABILITATION OF EXISTING STRUCTURE:
THE FOLLOWING REPAIRS ARE TO BE UNDERTAKEN ON SITE, WHERE DEEMED NECESSARY BY THE ENGINEER, IN ACCORDANCE WITH THE PROCEDURES AND MATERIALS OUTLINED IN SECTION F12000 AND DRAWING REFERENCE WCS/09/9/D2:

1. CRACK REPAIRS
   ALL CONCRETE SURFACES TO BE INSPECTED IN CONJUNCTION WITH THE ENGINEER'S REPRESENTATIVE TO IDENTIFY AND MARK-OUT ALL CRACKS EXCEEDING 0.3mm IN WIDTH.
2. FORMALIZING OF WINGWALL/ABUTMENT JOINT
   SAW CUT ALONG CRACK AT WINGWALL/ABUTMENT INTERFACE TO FORMALIZE THE JOINT.
   2.2 SEAL JOINT WITH APPROVED SILICONE SEALANT (REFER TO DETAIL1).
3. GUARDRAILS
   NEW GUARDRAILS TO BE INSTALLED IN ACCORDANCE WITH THE WESTERN CAPE GOVERNMENT (WCG) STANDARDS, PLAN NUMBERED WCS 54/1/C1-C7.

PROPOSED MAJOR CULVERT MAINTENANCE REPAIR MEASURES FOR CULVERT C10970 AT KM 5.57

#	ITEM	DEFECT	POSITION	REPAIR	QTY	UNITS
1	38.02(B) 42.09(A)	CRACKS	CULVERT WALL	REPAIR CRACKS AS PER STANDARD DRAWING WCS/60/9/D2 DETAIL 2 AND 3	10	m
2	54.09	INSTALL NEW GUARDRAILS	LADISMITH END (OUTLET SIDE)	INSTALL NEW GUARDRAILS AS PER STANDARD DRAWING WCS/60/9/D4	35	m
3	F126.01	EROSION	CULVERT OUTLET / APRON SLAB	INSTALL GABION MATTRESSES AS PER STANDARD DRAWING WCS/52/1/C2	125	m^3
4	F128.03	DEBRIS ACCUMULATION	CULVERT WATERWAY	REMOVE AND CLEAR	12	m
5	F123.01-F 123.05	DAMAGED CONCRETE, SPALLING AND EXPOSED REINFORCEMENT	CULVERT WALLS	REPAIR SPALLED CONCRETE AS PER STANDARD DRAWING WCS/60/9/D2 DETAIL 1	5	m
6	F124.05	CRACK IN JOINT	WINGWALL	FORMALISE WINGWALL JOINT AS PER DRAWING WCS/23/2/C1	3	m

EXAMPLE LIST OF MAJOR CULVERT REPAIRS

TYPICAL CROSS SECTION TAKEN FROM RECORD DRAWINGS OR SKETCHED OUT DIAGRAMMATICALLY TO SHOW EXTENT AND LOCATION OF DEFECTS.

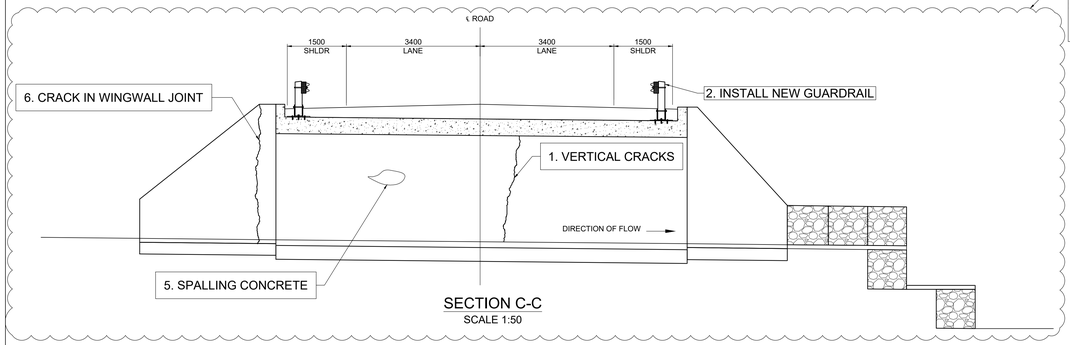

SECTION C-C
SCALE 1:50

PROVIDE INLET AND/OR OUTLET ELEVATION WHICH INDICATES EXTENT AND LOCATION OF REPAIRS.

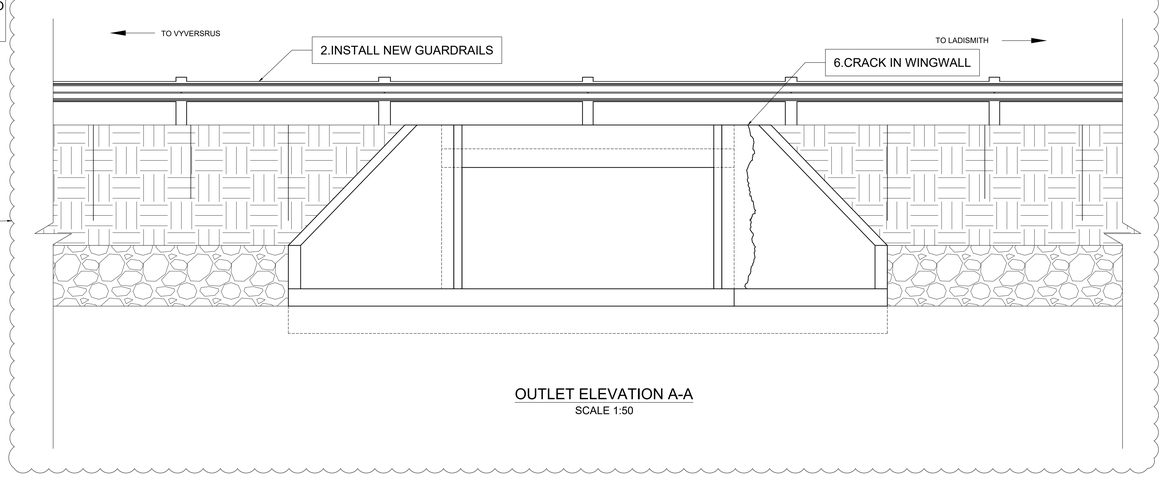

OUTLET ELEVATION A-A
SCALE 1:50

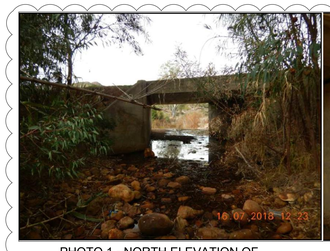

PHOTO 1 - NORTH ELEVATION OF CULVERT CLEAR TREES AND VEGETATION IN WATERWAY



PHOTO 2 - VERTICAL CRACK AT ABUTMENT/ WINGWALL INTERFACE ON ALL WINGWALLS REPAIR CRACKS AND FORMALIZE JOINT REFER TO REHABILIATION NOTE 1 AND DETAIL 1



PHOTO 3 - VERTICAL CRACK IN CULVERT WALLS REPAIR CRACKS TO REHABILITATION NOTE 1



PHOTO 4 - NO GUARDRAILS INSTALL GUARDRAILS TO WCG DETAILS REFER TO REHABILITATION NOTE 3

PHOTOS OF KEY DEFECTS

OPTIONAL, PHOTOS OF A FEW KEY DEFECTS WITH DESCRIPTIONS AND LOCATION CAN BE ADDED TO THE DRAWINGS. IMPORTANT: DO NOT FILL ENTIRE DRAWING WITH PHOTOS.

ADDITIONAL DETAILS TO BE ADDED TO THIS DRAWING THAT ARE NOT COVERED UNDER TYPICAL REPAIRS DRAWINGS WCS/60/9/D2.

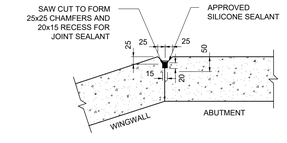

DETAIL 1
PLAN ON ABUTMENT WINGWALL INTERFACE REFER TO REHABILITATION

No.	DATE	ADDITIONS AND AMENDMENTS
0	OCT - 2023	ORIGINAL VERSION

STANDARD PLANS

WESTERN CAPE GOVERNMENT
DEPARTMENT OF INFRASTRUCTURE
TRANSPORT INFRASTRUCTURE BRANCH

STRUCTURE REHABILITATION

MAJOR CULVERT REPAIRS
EXAMPLE DRAWING

SCALE : N.T.S.

A0 ORIGINAL

INDEX NO.
WCS/60/9/D5

PLAN NO.
SHEET 5 OF 7

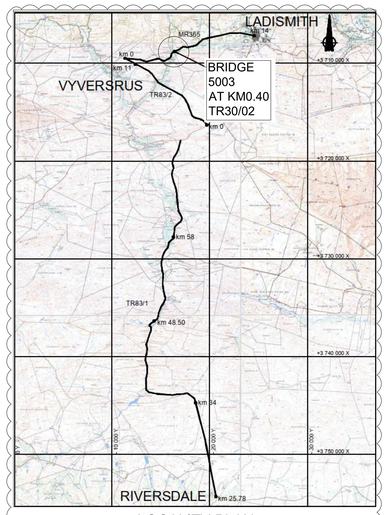

LOCALITY PLAN
SCALE 1:50 000

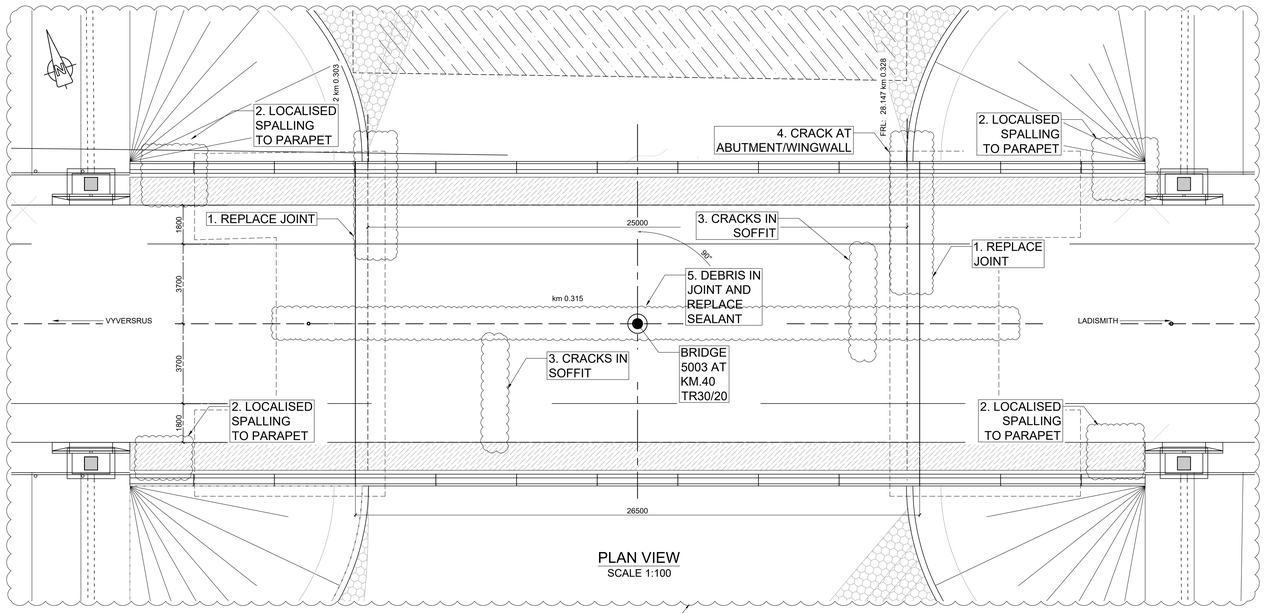

PLAN VIEW
SCALE 1:100

PLAN SECTION TAKEN FROM RECORD DRAWINGS OR SKETCHED OUT DIAGRAMMATICALLY TO SHOW EXTENT AND LOCATION OF DEFECTS.

TYPICAL NOTES.

GENERAL NOTES (EXAMPLE)
GENERAL NOTES TO BE PROVIDED THAT PROVIDE REFERENCE TO ALL RELEVANT DRAWINGS BASED ON THE SPECIFIED/REQUIRED REMEDIAL ACTIONS.
NOTE:
1. REPAIRS TO BE CARRIED OUT USING PROPRIETARY REPAIR SYSTEMS AND IN ACCORDANCE WITH MANUFACTURER'S RECOMMENDATIONS.
2. SIMILAR OR APPROVED PRODUCTS MAY BE USED SUBJECT TO APPROVAL BY ENGINEER.
3. REINFORCEMENT DOWELS/ANCHORS TO BE HOT DIP GALVANIZED.

PROPOSED BRIDGE MAINTENANCE REPAIR MEASURES FOR BRIDGE 5003 AT KM 0.40 TR30/02

#	ITEM	DEFECT	POSITION	REPAIR	QTY	UNITS
1	38.02(B) 42.09(A)	REPLACE BRIDGE JOINT	BRIDGE DECK	REPLACE EXISTING ASPHALTIC PLUG EXPANSION JOINT WITH NEW JOINT AS PER STANDARD DRAWING WCS/60/9/D3	12	m
2	54.09	LOCALISED SPALLING	PARAPETS	REPAIR SPALLED CONCRETE WITH PROPRIETARY REPAIR MORTAR AS PER STANDARD DRAWING WCS/60/9/D2 DETAIL 1	500	l
3	F126.01	CRACKS	DECK SOFFIT	REPAIR CRACKS AS PER STANDARD DRAWING WCS/60/9/D2 DETAIL 2 AND 3	10	m
4	F128.03	CRACK IN JOINT	WINGWALL / ABUTMENT	FORMALISE WINGWALL JOINT AS PER DRAWING WCS/23/2/C1	12	m
5	F123.01-F 123.05	DEBRIS	EXPANSION JOINT	CLEAR DEBRIS TO EXISTING LONGITUDINAL EXPANSION JOINT AND REPLACE SILICONE SEALANT AS PER DETAIL 1 IN THE DRAWING	30	m

EXAMPLE LIST OF BRIDGE REPAIRS

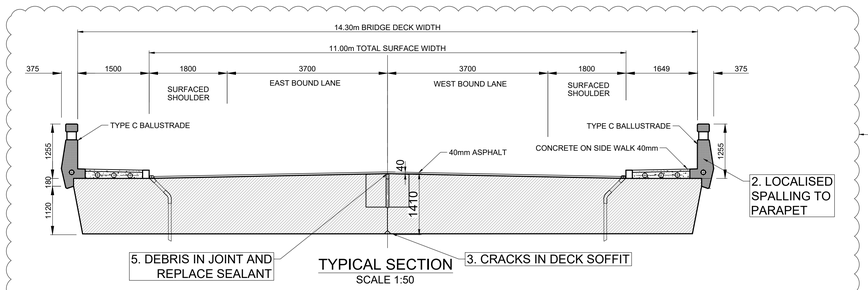

TYPICAL SECTION
SCALE 1:50

TYPICAL CROSS SECTION TAKEN FROM RECORD DRAWINGS OR SKETCHED OUT DIAGRAMMATICALLY TO SHOW EXTENT AND LOCATION OF DEFECTS.

ADDITIONAL DETAILS TO BE ADDED TO THIS DRAWING THAT ARE NOT COVERED UNDER TYPICAL REPAIRS DRAWINGS WCS/60/9/2.

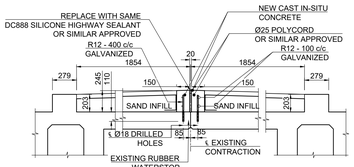

DETAIL 1: EXISTING LONGITUDINAL JOINT DETAIL ALONG MEDIAN
SCALE 1:5

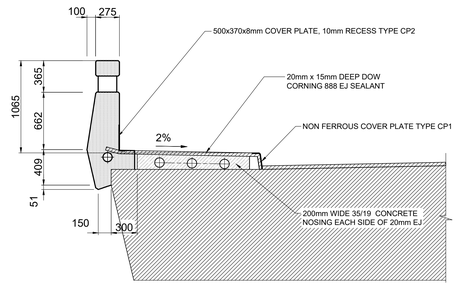

SECTION - EXPANSION JOINT DETAIL
SCALE 1:20

ADDITIONAL DETAILS

TYPICAL ELEVATION TO BE PROVIDED TAKEN FROM RECORD DRAWINGS OR SKETCHED OUT DIAGRAMMATICALLY TO SHOW EXTENT AND LOCATION OF DEFECTS.

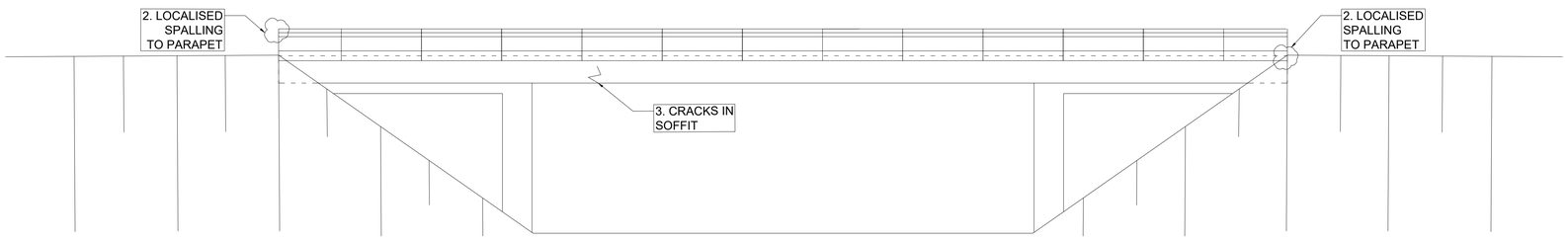

TYPICAL ELEVATION VIEW
SCALE 1:100

OPTIONAL, PHOTOS OF A FEW KEY DEFECTS WITH DESCRIPTIONS AND LOCATION CAN BE ADDED TO THE DRAWINGS. IMPORTANT DO NOT FILL ENTIRE DRAWING WITH PHOTOS.

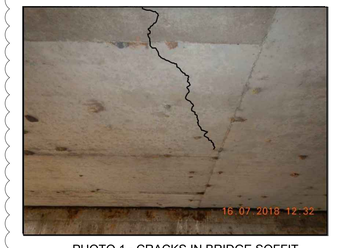

PHOTO 1 - CRACKS IN BRIDGE SOFFIT



PHOTO 2 - VERTICAL CRACK AT ABUTMENT/ WINGWALL INTERFACE ON ALL WINGWALLS REPAIR CRACKS AND FORMALIZE JOINT

PHOTOS OF KEY DEFECTS

No.	DATE	ADDITIONS AND AMENDMENTS
0	OCT - 2023	ORIGINAL VERSION

STANDARD PLANS

WESTERN CAPE GOVERNMENT
DEPARTMENT OF INFRASTRUCTURE
TRANSPORT INFRASTRUCTURE BRANCH

STRUCTURE REHABILITATION

BRIDGE REPAIRS EXAMPLE DRAWING

SCALE : N.T.S.

A0 ORIGINAL

INDEX NO.
WCS/60/9/D6

PLAN NO.
SHEET 6 OF 7

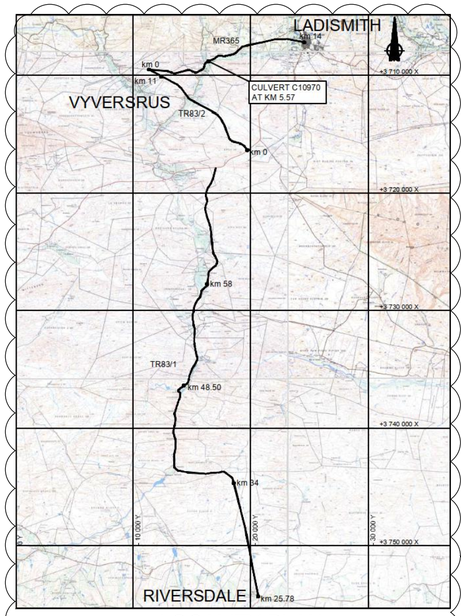

LOCALITY PLAN
SCALE 1:50 000

Locality plan required.

REPAIR ITEM	REPAIR ACTION	CULVERT NO. 10948 AT KM 33.33	CULVERT NO. 10949 AT KM 34.45	CULVERT NO. 10950 AT KM 34.64	CULVERT NO. 10941 AT KM 37.86	CULVERT NO. 10951 AT KM 38.74	CULVERT NO. 10952 AT KM 39.31	CULVERT NO. (number in process) AT KM 41.1	CULVERT NO. 10953 AT KM 43.17	CULVERT NO. 10954 AT KM 43.75	CULVERT NO. (number in process) AT KM 48.39	CULVERT NO. 10955 AT KM 51.50	CULVERT NO. 10956 AT KM 53.01	CULVERT NO. 10957 AT KM 53.70	CULVERT NO. 10958 AT KM 54.10	CULVERT NO. 10959 AT KM 55.03	CULVERT NO. 10940 AT KM 56.02	CULVERT NO. 10960 AT KM 62.32	CULVERT NO. 10961 AT KM 64.48	CULVERT NO. 10962 AT KM 64.73	CULVERT NO. 10382 AT KM 67.95	CULVERT NO. 10383 AT KM 69.25	CULVERT NO. 10964 AT KM 71.06	CULVERT NO. 10965 AT KM 71.71	CULVERT NO. 12264 AT KM 72.43	CULVERT NO. 10967 AT KM 73.15	CULVERT NO. 10968 AT KM 73.40	CULVERT NO. (number in process) AT KM 73.84
DAMAGED CONCRETE, SPALLING AND EXPOSED REINFORCEMENT	REFER TO DETAIL 1	✓											✓				✓	✓		✓	✓					✓	✓	
DANGER PLATES	ERECT DANGER PLATES AS PER STANDARD DRAWING WCS/56/1/C6							✓																				
MAJOR CULVERT NUMBER	MOUNT MAJOR CULVERT NUMBER PLATE REFER TO CULVERT NUMBER PLATE DETAILS							✓			✓																	
EROSION	PLACE GABION MATTRESSES AS EROSION PROTECTION REFER TO STANDARD DRAWINGS WCS/52/1/C1 AND WCS/52/1/C2						✓	✓		✓																		✓
DEBRIS IN WATERWAY	REMOVE AND CLEAR		✓		✓	✓	✓	✓	✓		✓	✓	✓	✓	✓	✓		✓		✓	✓	✓		✓		✓	✓	✓

LIST OF MAJOR CULVERT REPAIRS

For periodic maintenance project and type of repair work it is not necessary to provide separate drawings for each structure.

A list or table showing all the structures numbers with road numbers and km distances that are applicable to the drawing with the defects and repair actions, should be provided on the drawing.

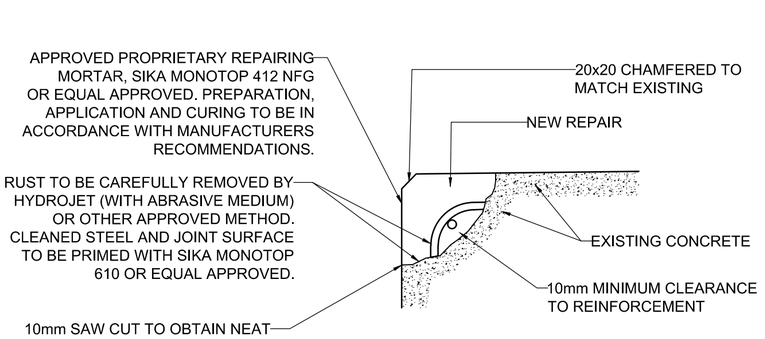

DETAIL 1 - TYPICAL CONCRETE SPALL REPAIR
NOTE:REPAIRS TO BE CARRIED OUT USING APPROVED PROPRIETARY REPAIR SYSTEM AND IN ACCORDANCE MANUFACTURER'S RECOMMENDATIONS.
SCALE 1:2

Includes sections or details of repair actions that are not standard or covered on other drawings. If standard repair items/details are used they should be referenced.

CONCRETE REPAIR PRODUCTS

APPLICATION:

CONCRETE REPAIRS:
- REINFORCEMENT AND CONCRETE SURFACE PRIMER
- STRUCTURAL REPAIR MORTAR

REINFORCEMENT DOWEL/ANCHORS:
- HORIZONTAL AND OVERHEAD
- VERTICAL

SUGGESTED PRODUCT

SIKA MONOTOP 610
SIKA MONOTOP 412 NFG

SIKA ANCHORED FIX-3+
SIKADUR 32N, SIKADUR 42ZA

NOTE:
1. REPAIRS TO BE CARRIED OUT USING PROPRIETARY REPAIR SYSTEMS AND IN ACCORDANCE WITH MANUFACTURER'S RECOMMENDATIONS.
2. THE USE OF ALTERNATIVE PRODUCTS SHALL BE SUBJECT TO APPROVAL OF THE EMPLOYER'S AGENT.
3. REINFORCEMENT DOWELS/ANCHORS TO BE HOT DIP GALVANISED.

Recommended product table, may have to leave suggested products blank or add a note that these are only examples and consultants to specify products or product specifications.

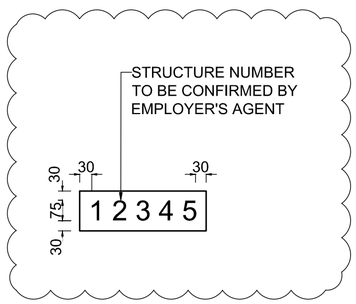

Reference WCS new standard plan for retrofitting structure numbers.

CULVERT NUMBER PLATE:

1. SUPPLY AND INSTALL 2 NUMBER PLATES PER STRUCTURE
2. LOCATION, LAYOUT AND DETAILS OF NUMBERING TO BE AS SPECIFIED ON STANDARD PLAN WCS/60/8/D1
3. NUMBERING TO BE BLACK ON WHITE BACKGROUND.
4. PLATES TO BE MANUFACTURED FROM APPROVED DURABLE MATERIAL (AS PER VEHICLE REGISTRATION ON PLATE) AND BONDED TO CONCRETE WITH SIKAFLEX 11FC.

No.	DATE	ADDITIONS AND AMENDMENTS
0	OCT - 2023	ORIGINAL VERSION

STANDARD PLANS

WESTERN CAPE GOVERNMENT
DEPARTMENT OF INFRASTRUCTURE
TRANSPORT INFRASTRUCTURE BRANCH

STRUCTURE REHABILITATION

MINOR REPAIRS AT MAJOR CULVERTS - EXAMPLE DRAWING

SCALE : N.T.S.

A2 ORIGINAL

INDEX NO.
WCS/60/9/D7

PLAN NO.
SHEET 7 OF 7

MEMBER	NO OF	NO BARS	DIA	CUT LENGTH	TOTAL	BAR MARK	SC	A	B	C	D	E/R	kg
SPANDREL WALL PANEL 3	16	7	Y12	1800	112	B101	55	200	200	1100	200	[200]	179
	16	21	Y12	1350	336	B102	38	150	1100	150			403
	5	9	Y12	2300	45	B201	55	200	250	1500	250	[200]	92
	5	27	Y12	1750	135	B202	38	150	1500	150			210
	4	7	Y12	1900	28	B301	55	200	250	1100	250	[200]	47
	4	21	Y12	1350	84	B302	38	150	1100	150			101
	4	4	Y16	900	16	B303	37	250	690				23
	4	3	Y10	1550	12	B304	60	350	350				11
	5	9	Y12	2300	45	B201	55	200	250	1500	250	[200]	92
	5	27	Y12	1750	135	B202	38	150	1500	150			210
	5	9	Y12	2400	45	B401	38	1100	250	1100			96
	5	9	Y12	2350	45	B402	38	1100	220	1100			94
	5	12	Y12	2250	60	B403	38	150	1990	150			120
	1	2	Y16	3000	2	R401	37	350	[illegible]				9
	1	2	Y16	5350	2	R402	37	350	[illegible]				17
	1	2	Y16	3650	2	R403	37	[illegible]	3350				12
	1	2	Y16	4750	2	R404	37	350	4450				15
	1	5	Y16	5450	5	R405	37	350	5150				43
	1	5	Y16	3050	5	R406	37	350	2750				24
	1	10	Y16	4150	10	R407	37	350	3850				66
	1	66	Y10	1150	66	R408	60	260	250				47
	1	66	Y10	1550	66	R409	60	510	190				63
	1	4	Y16	1400	4	C01	37	300	1150				9
	1	4	Y16	4150	4	C02	37	190	4010				26
	1	23	Y10	1050	23	C03	60	190	270				15
	1	4	Y20	1650	4	C11	37	300	1400				16
	1	2	Y12	1300	2	C12	37	300	1000				2
	1	4	Y20	4150	4	C13	37	200	4010				41
	1	2	Y12	4200	2	C14	37	190	4010				7
	1	24	Y10	1500	24	C15	60	140	550				22
	1	24	Y10	250	24	C16	85	70	140	40	[70]		4
	2	4	Y25	1900	8	C21	37	300	1640				59
	2	2	Y12	1300	4	C22	37	300	1000				5
	2	4	Y25	4200	8	C23	37	250	4010				129
	2	2	Y12	4200	4	C24	37	190	4010				15
	2	23	Y10	1350	46	C25	60	190	420				38
	2	23	Y10	300	46	C26	85	70	190	40	[70]		9
	1	4	Y20	1650	4	C31	37	300	1400				16

---		---			
Date	30/1/2023	Ref Dwg	-	Revision	REV0
Det. by	A.L.	Job No	-	Schedule No	01

MEMBER	NO OF	NO BARS	DIA	CUT LENGTH	TOTAL	BAR MARK	SC	A	B	C	D	E/R	kg
SPANDREL WALL PANEL 3	1	2	Y12	1300	2	C32	37	300	1000				2
	1	4	Y20	4150	4	C33	37	200	4010				41
	1	2	Y12	4200	2	C34	37	190	4010				7
	1	23	Y10	1350	23	C35	60	190	420				19
	1	23	Y10	300	23	C36	85	70	190	40	[70]		4
	4	4	Y25	1900	16	C41	37	300	1640				117
	4	2	Y12	1300	8	C42	37	300	1000				9
	4	4	Y25	4200	16	C43	37	250	4010				259
	4	2	Y12	4200	8	C44	37	190	4010				30
	4	23	Y10	1250	92	C45	60	140	420				71
SPANDREL WALL PANEL 4	3	4	Y20	1650	12	C51	37	300	1400				49
	3	2	Y12	1300	6	C52	37	300	1000				7
	3	4	Y20	4150	12	C53	37	200	4010				123
	3	2	Y12	4200	6	C54	37	190	4010				22
	3	23	Y10	1250	69	C55	60	[illegible]	420				53
	3	23	Y10	250	69	C56	85	70	140	40	[70]		11
	1	8	Y10	7100	8	F01	20	[illegible]					35
	1	8	Y10	1200	8	F02	20	1210					6
	1	8	Y10	1700	8	F03	20	1690					8
	1	8	Y10	2350	8	F04	20	2320					12
	1	8	Y10	7150	8	F05	20	7150					35
	1	18	Y10	5450	18	F06	20	5450					60
	1	24	Y10	4100	24	F07	20	4070					61
	1	48	Y10	1400	48	F08	20	1400					41
	1	24	Y10	5100	24	F09	20	5100					75
	1	16	Y10	8850	16	F10	20	8840					87
	1	8	Y10	4050	8	F11	20	4060					20
	1	8	Y10	11950	8	F12	20	11930					59
	1	8	Y10	4050	8	F13	20	4040					20
	1	8	Y10	2800	8	F14	20	2810					14
	1	8	Y10	2750	8	F15	20	2760					14
	1	10	Y10	3950	10	F16	20	3920					24
	1	8	Y10	3750	8	F17	20	3720					18
	1	10	Y10	7900	10	F18	20	7890					49
	1	8	Y10	3250	8	F19	20	3260					16
	1	8	Y10	6100	8	F20	20	6110					30
	1	8	Y10	2700	8	F21	20	2680					13

---		---			
Date	30/1/2023	Ref Dwg	-	Revision	REV0
Det. by	A.L.	Job No	-	Schedule No	02

MEMBER	NO OF	NO BARS	DIA	CUT LENGTH	TOTAL	BAR MARK	SC	A	B	C	D	E/R	kg
SPANDREL WALL PANEL 4	1	8	Y10	6650	8	F22	20	6660					33
	1	8	Y10	6850	8	F23	20	6840					34
	1	8	Y10	3900	8	F24	20	3900					19
	1	8	Y10	6900	8	F25	20	6890					34
	1	8	Y10	5550	8	F26	20	5530					27
	1	16	Y10	10750	16	F27	20	10720					106
	1	8	Y10	6900	8	F28	20	6870					34
	1	8	Y10	1700	8	F29	20	1680					8
	1	16	Y10	7350	16	F30	20	7350					73
	1	8	Y10	3500	8	F31	20	3480					17
	1	8	Y10	6000	8	F32	20	6010					30
	1	8	Y10	3400	8	F33	20	3380					17
	1	8	Y10	4550	8	F34	20	4560					22
	1	8	Y10	3700	8	F35	20	3670					18
	1	8	Y10	4600	8	F36	20	4590					23
	1	8	Y10	5450	8	F37	20	[illegible]					27
TIE BEAMS 400X300	1	8	Y10	3400	8	F39	20	[illegible]					17
	1	8	Y10	3450	8	F40	[illegible]	3430					17
600X300	1	8	Y10	11150	8	F42	20	11160					55
	1	16	Y10	7550	16	F43	20	7550					74

---		---			
Date	30/1/2023	Ref Dwg	-	Revision	REV0
Det. by	A.L.	Job No	-	Schedule No	03

MEMBER	NO OF	NO BARS	DIA	CUT LENGTH	TOTAL	BAR MARK	SC	A	B	C	D	E/R	kg
PARAPETS	1	122	Y10	6600	122	PR05	37	250	6350				496
	1	16	Y12	2000	16	PR06	20	2000					28
	1	47	Y16	2000	47	PR07	20	2000					148
	5	8	Y16	1150	40	P1	37	250	950				73
	5	8	Y16	800	40	P2	62	270	100	500			51
	5	4	Y10	1350	20	P3	81	540	[540]				17
	5	1	Y10	1050	5	P4	81	390	[390]				3
	1	4	Y16	1900	4	R301	38	160	1640	160			12
	1	4	Y16	7500	4	R302	38	160	7260	160			47
	1	4	Y16	1700	4	R303	38	160	1450	160			11
	1	45	Y10	1050	45	R304	60	190	260				29
	1	16	Y16	1450	16	R201	37	1060	400				37
	1	12	Y16	1200	12	R202	37	1060	160				23
	1	4	Y16	2500	4	R203	20	2480					16
	1	8	Y16	7000	8	R204	20	7000					88
	1	12	Y16	7350	12	R205	20	[illegible]					139
	1	4	Y16	4300	4	R206	37	[illegible]	160				27
	1	4	Y16	4700	4	R207	37	[illegible]	160				30
ENDBLOCKS	1	226	Y10	1150	226	R209	60	250	260				160
	1	80	Y16	1450	80	R101	37	1060	400				183
	1	4	Y16	8200	4	R102	37	160	8090				52
	1	4	Y16	4900	4	R103	38	160	4650	160			31
	1	4	Y16	3450	4	R104	37	160	3330				22
	1	4	Y16	8250	4	R105	37	160	8100				52
	1	4	Y16	4900	4	R106	38	160	4660	160			31
	1	4	Y16	3500	4	R107	37	160	3350				22
	1	4	Y16	5250	4	R108	38	160	4990	160			33

---		---			
Date	30/1/2023	Ref Dwg	-	Revision	REV0
Det. by	A.L.	Job No	-	Schedule No	04

MEMBER	NO OF	NO BARS	DIA	CUT LENGTH	TOTAL	BAR MARK	SC	A	B	C	D	E/R	kg
PARAPETS	1	8	Y10	3150	8	S29	20	3120					16
PIERS	1	12	Y10	4450	12	S31	20	4430					33
	1	3	Y10	5050	3	S32	20	5020					9
	1	4	Y10	4900	4	S33	20	4910					12
	1	3	Y10	5000	3	S34	20	5000					9
	1	4	Y10	4900	4	S35	20	4890					12
	1	505	Y10	1450	505	S36	43	150	240	660	170	[150]	451
ABUTMENT	1	11	Y10	1800	11	S38	43	150	240	1010	170	[150]	12
	1	4	Y10	750	4	S39	20	760					2
	1	4	Y10	2100	4	S40	20	2090					5
	1	188	Y10	1400	188	S41	73	150	360	[illegible]			162
	1	40	Y10	1300	40	S42	73	150	[illegible]	[illegible]			32
	12	8	Y10	1000	96	S43	20	990					59

	6	8	10	12	16	20	25	32	40	TOTAL
R										
Y			6452	2990	[illegible]	608	1453			13972
TOTAL			6452	2990	2469	608	1453			13972

---		---			
Date	30/1/2023	Ref Dwg	-	Revision	REV0
Det. by	A.L.	Job No	-	Schedule No	07

EXAMPLE

SHAPE CODES 20 - 86

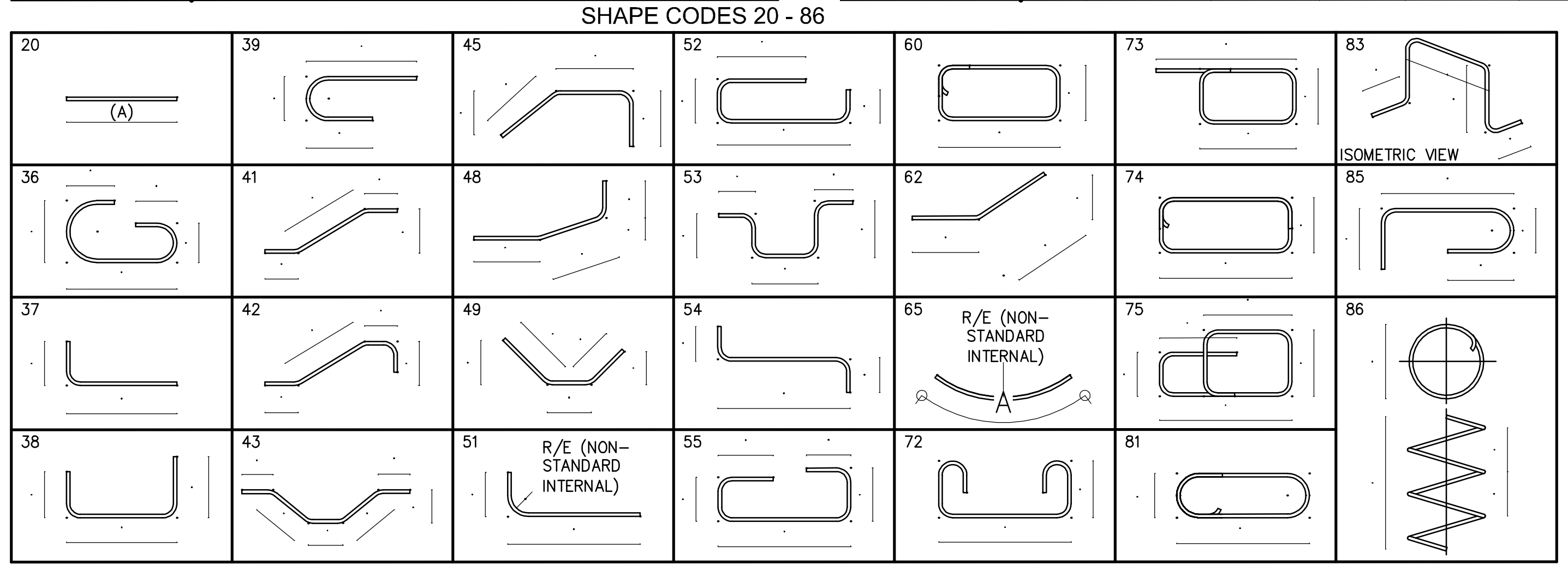

NOTES

1. BEND TO 2d RADIUS FOR MILD STEEL BARS AND 3d RADIUS OR 7,5d IF SHAPE CODE IS FOLLOWED BY SUFFIX 'S' FOR HIGH TENSILE STEEL BARS UNLESS LARGER RADII ARE INDICATED FOR THE PARTICULAR SHAPE CODE.
2. STEEL TO COMPLY WITH SANS 920. MILD STEEL BARS SHALL BE PLAIN AND HIGH TENSILE STEEL BARS DEFORMED.
3. MILD STEEL BARS ARE IDENTIFIED BY A CAPITAL 'R' AND HIGH TENSILE STEEL BARS BY A CAPITAL 'Y' PREFIXED TO THE DIAMETER IN mm.
4. BENDING DIMENSIONS SHALL BE IN ACCORDANCE WITH SANS 282, EXCEPT AS SHOWN OTHERWISE ON THIS SHEET. WELDING OF BARS IS INDICATED BY 'W' AND LAPPING BY 'LAPPED'.
5. ALL BARS SHALL BE BENT COLD. WELDING SHALL NOT BE PERMITTED FOR HIGH TENSILE STEEL BARS.
6. WELDING OF MILD STEEL BARS SHALL BE IN ACCORDANCE WITH SANS 10044 AND BS 1856 OR BS 693.
7. ALL DIMENSIONS GIVEN ON SHAPE CODES ARE EXTERNAL EXCEPT FOR OFFSETS OF FREE ENDS (SEE SKETCH).
8. THE CUTTING LENGTH TOLERANCE IS TAKEN UP IN THE BRACKETED DIMENSIONS OR IN HOOKS OR BENT ENDS WHERE PRESENT.
9. SUFFIX 'B' OR 'H' TO A STANDARD SHAPE CODE INDICATES THE ADDITION OF TWO BENT ENDS OR HOOKS TO THE FREE ENDS OF THE STANDARD SHAPE. THEY ARE BENT IN THE SAME DIRECTION AS THE ADJACENT BEND OR CURVE. THE DIMENSIONS IN BRACKETS ARE GIVEN IN THIS CASE.

REINFORCEMENT BENDING SCHEDULE
SUMMARY OF COMPONENTS

PROJECT No.: | SCHEDULE No. 01 TO
TITLE: | SCHEDULE No. 25

ELEMENT	CONCRETE CLASS	CONCRETE VOLUME	R-BAR TOTAL	R-BAR DENSITY	Y-BAR TOTAL	Y-BAR DENSITY
ARCHES	W30	195 m³	2.94 ton	15.08 kg/m³	26.9 ton	132,82 kg/m³
WALLS	W30	180 m³	0 ton	0,000 kg/m³	13.6 ton	75,556 kg/m³
PARAPETS	W40	79 m³	0.3 ton	4.180 kg/m³	9.35 ton	118.396 kg/m³
ABUTMENTS	W30	618 m³	0.25 ton	0.408 kg/m³	29.99 ton	48.54 kg/m³
PIERS	W30	267 m³	0,05 ton	0.199 kg/m³	10.88 ton	40.786 kg/m³

No.	DATE	ADDITIONS AND AMENDMENTS
0	OCT - 2023	ORIGINAL VERSION

STANDARD PLANS

WESTERN CAPE GOVERNMENT
DEPARTMENT OF INFRASTRUCTURE
TRANSPORT INFRASTRUCTURE BRANCH

TYPICAL DRAWING DETAILS

BENDING SCHEDULE EXAMPLE

SCALE : N.T.S.

A2 ORIGINAL

INDEX NO. WCS/60/10/D1

PLAN NO. SHEET 1 OF 1

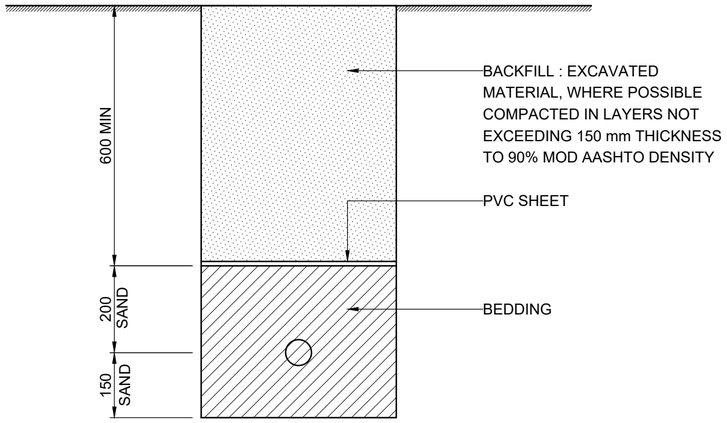

CABLE INSTALLATION

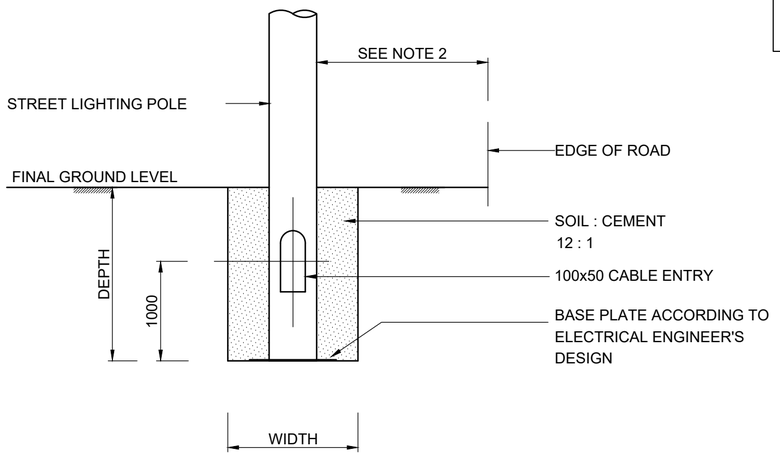

FOUNDATION			
ITEM	POLE HEIGHT		
	3,5m - 7,0m	7,0m - 10,5m	>10,5
DEPTH (mm)	1000	1800	2000
WIDTH (mm)	800	1000	1500

INSTALLATION OF STREET LIGHTING POLE

NOTES :

1. THE POLE TYPE AND LUMINARE TYPE TO BE SPECIFIED BY THE ELECTRICAL ENGINEER.
2. LATERAL DISTANCE FROM ROAD EDGE OR KERB TO BE SPECIFIED BY THE ENGINEER.
3. LIGHTING CLASS TO BE SPECIFIED BY THE ELECTRICAL ENGINEER.
4. AFTER MANUFACTURE, ALL MILD STEEL TO BE HOT-DIPPED GALVANISED TO SANS 121

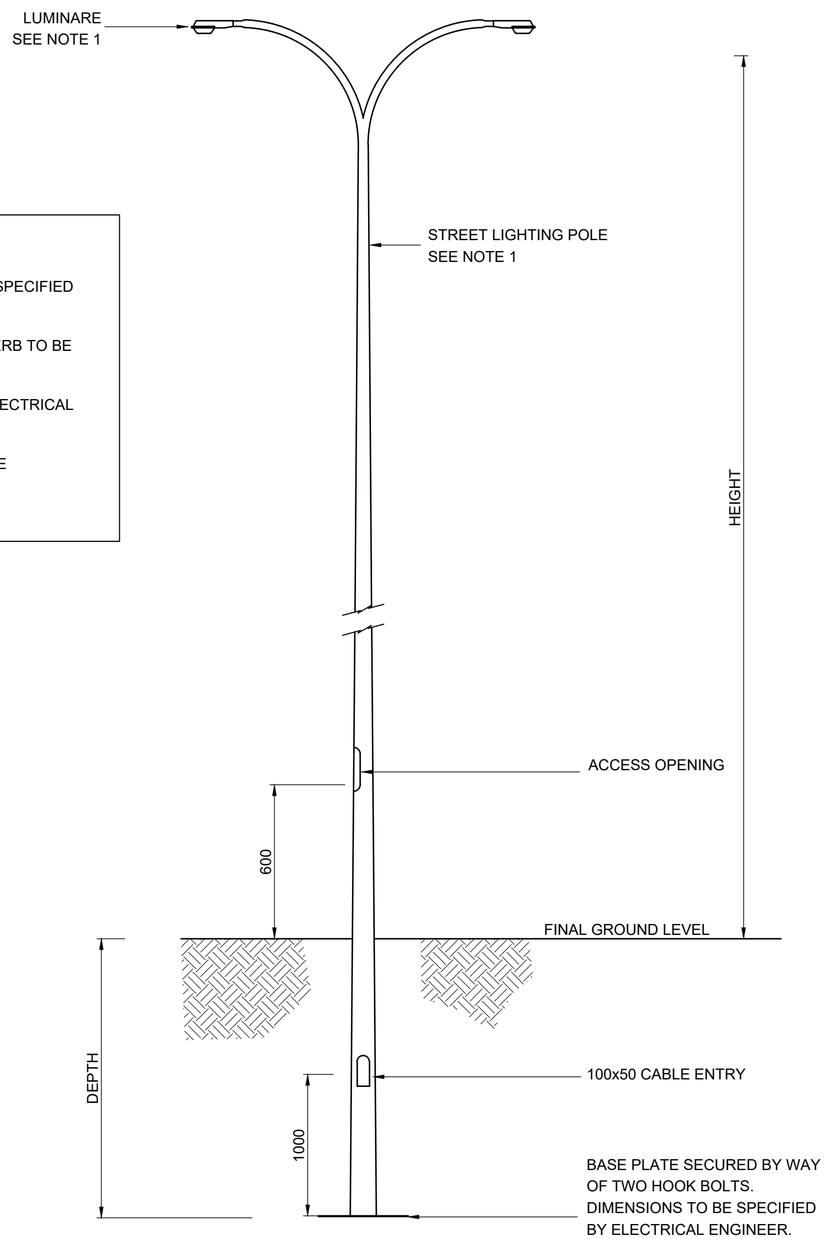

TYPICAL POLE

No.	DATE	ADDITIONS AND AMENDMENTS
0	OCT - 2023	ORIGINAL VERSION

STANDARD PLANS

WESTERN CAPE GOVERNMENT
DEPARTMENT OF INFRASTRUCTURE
TRANSPORT INFRASTRUCTURE BRANCH

LIGHTING

STREET LIGHTING - TYPICAL DETAILS

SCALE : N.T.S.

A2 ORIGINAL

INDEX NO.
WCS-90-1-D1

PLAN NO.
SHEET 1 OF 2

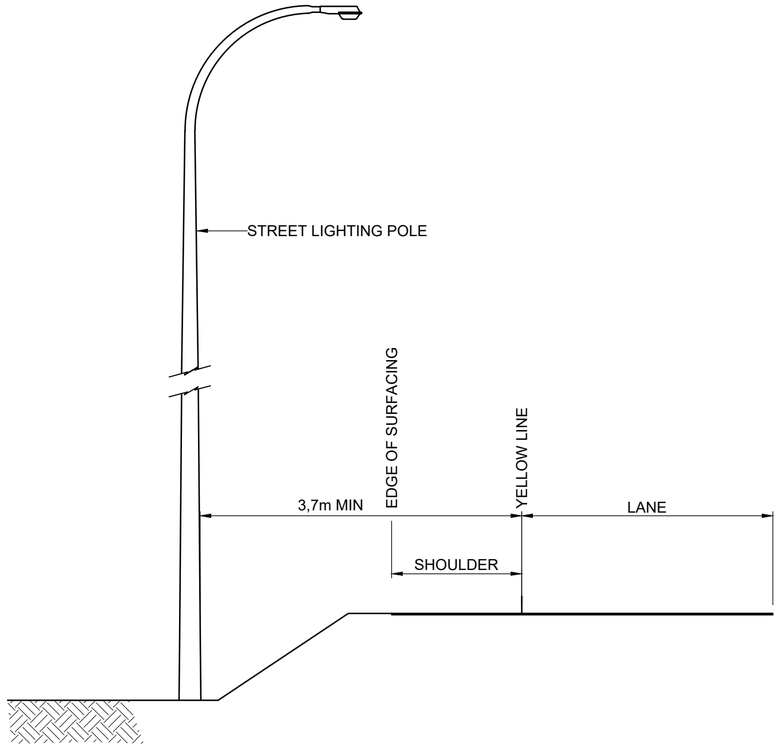

ROAD WITH SURFACED SHOULDER

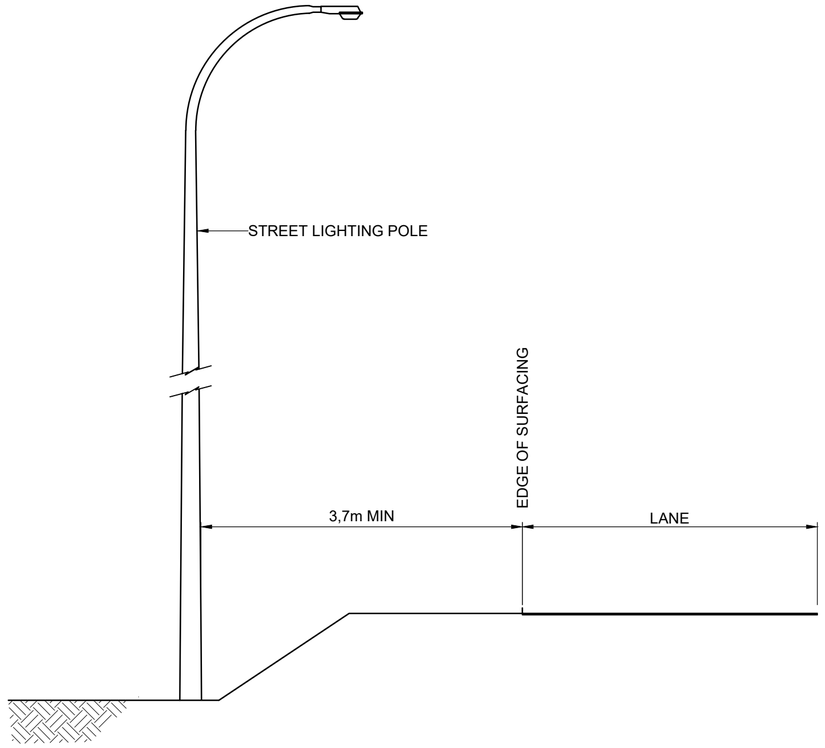

ROAD WITH GRAVEL SHOULDER

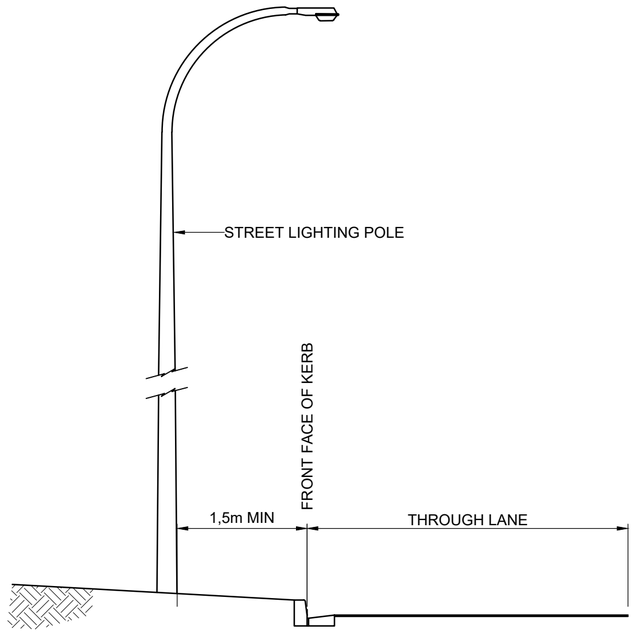

ROAD WITH KERB ADJACENT TO THROUGH LANE

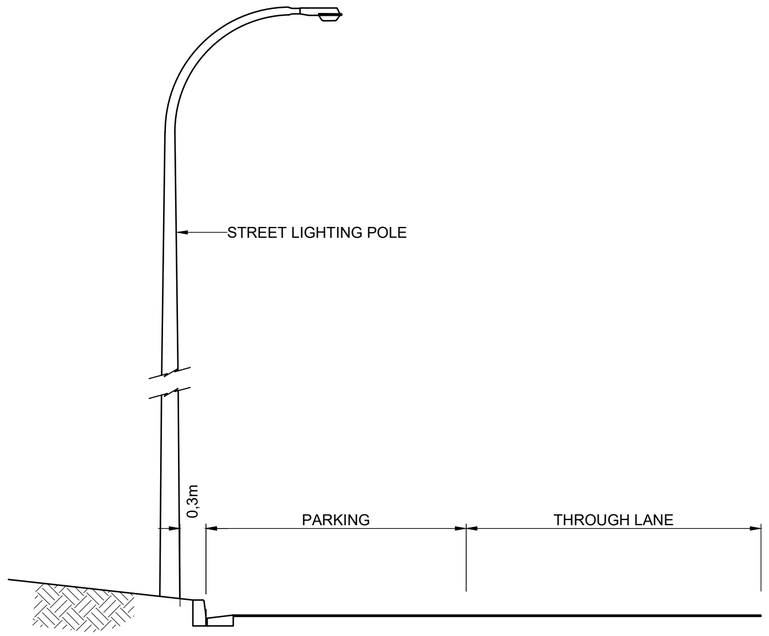

ROAD WITH PARKING LANE

No.	DATE	ADDITIONS AND AMENDMENTS
0	OCT - 2023	ORIGINAL VERSION

STANDARD PLANS

WESTERN CAPE GOVERNMENT
DEPARTMENT OF INFRASTRUCTURE
TRANSPORT INFRASTRUCTURE BRANCH

LIGHTING

STREET LIGHTING - POLE POSITIONS

SCALE : N.T.S.

A2 ORIGINAL

INDEX NO.
WCS/90/1/D2

PLAN NO.
SHEET 2 OF 2

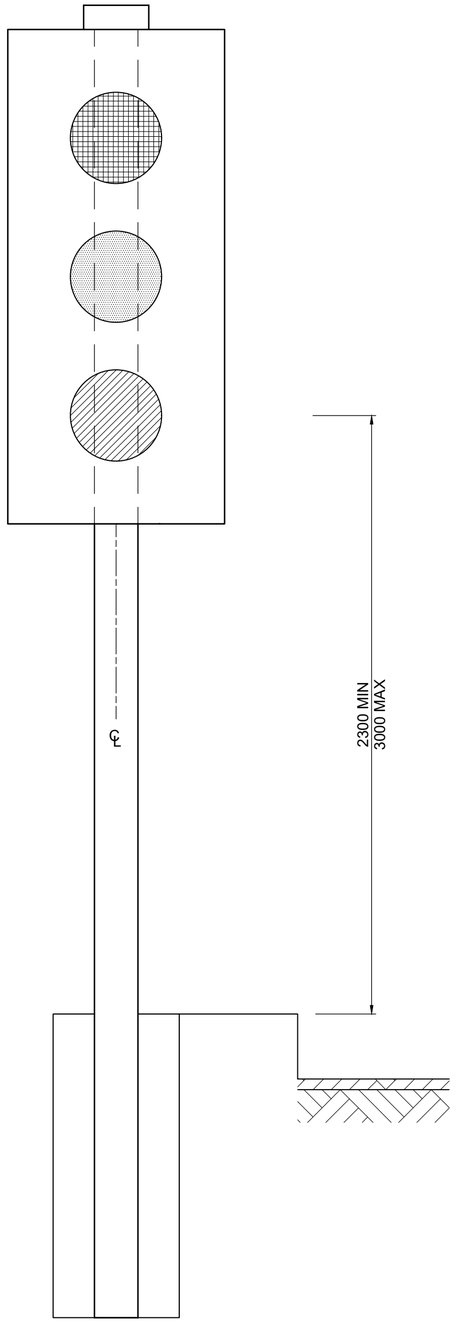

ELEVATION

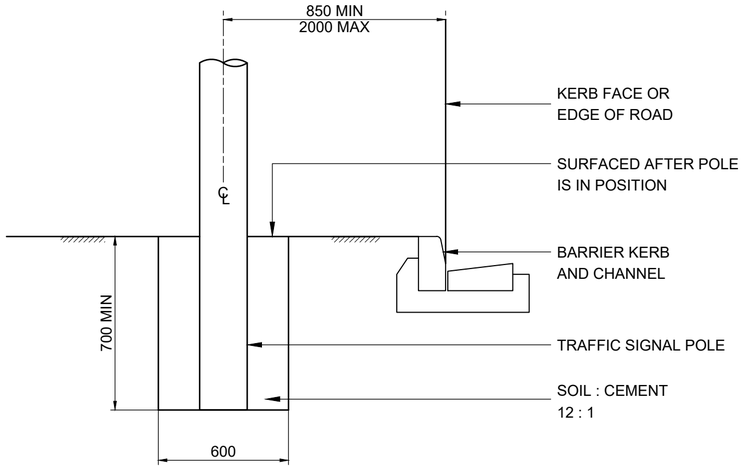

FOUNDATION

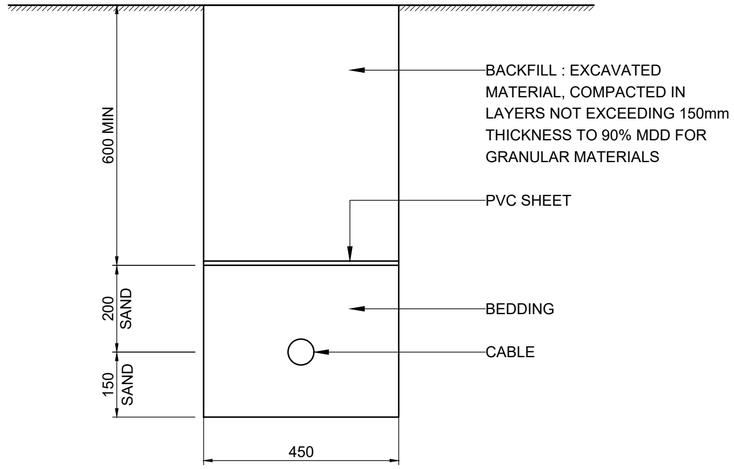

CABLE TRENCH INSTALLATION

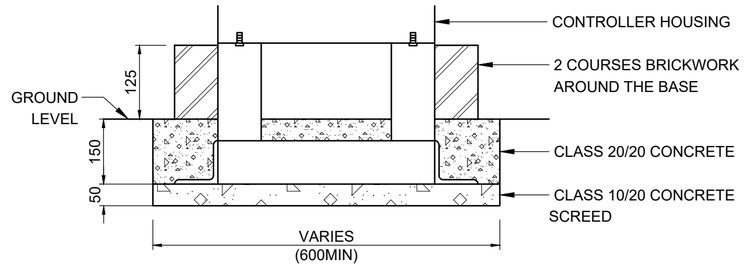

CONTROLLER BASE FOUNDATION

No.	DATE	ADDITIONS AND AMENDMENTS
0	OCT - 2023	ORIGINAL VERSION

STANDARD PLANS

WESTERN CAPE GOVERNMENT
DEPARTMENT OF INFRASTRUCTURE
TRANSPORT INFRASTRUCTURE BRANCH

TRAFFIC SIGNALS

ERECTION DETAILS

SCALE : N.T.S.

A2 ORIGINAL

INDEX NO.
WCS/90/2/D1

PLAN NO.
SHEET 1 OF 4

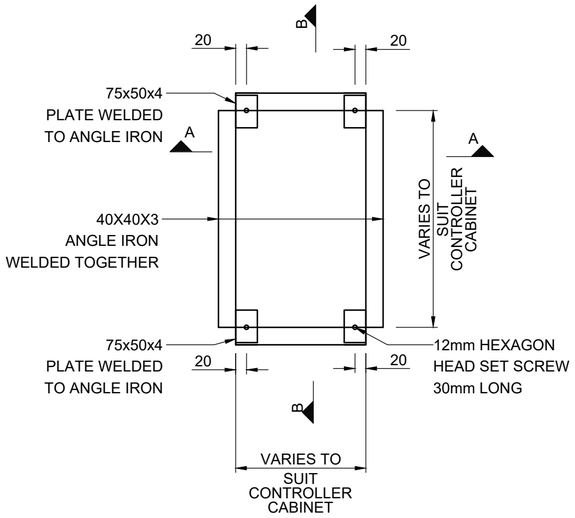

PLAN

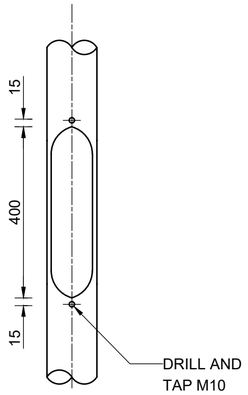

SLOT DETAIL

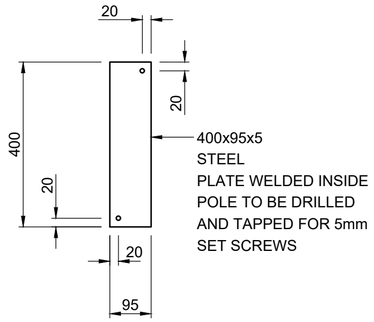

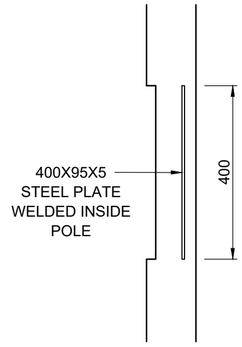

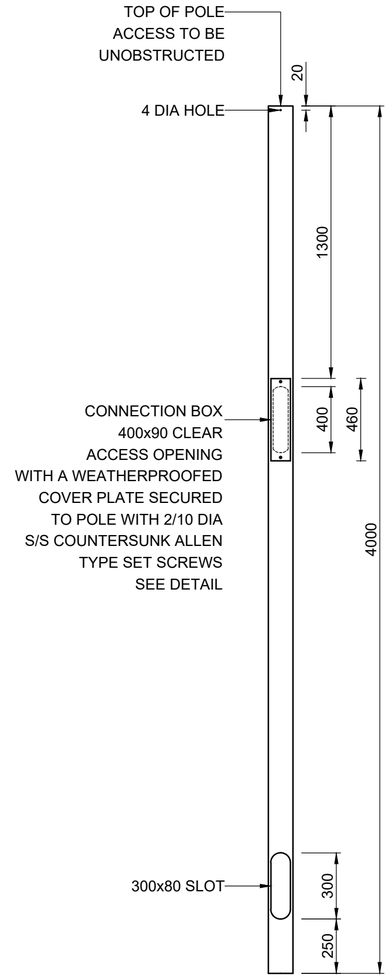

TRAFFIC SIGNAL POLE

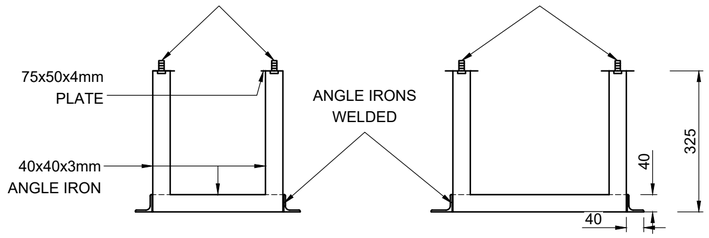

SECTION A-A SECTION B-B

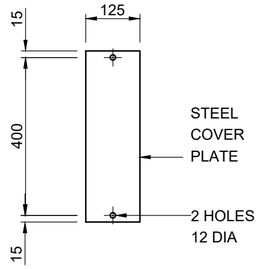

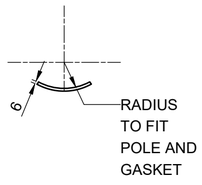

SLOT COVER PLATE

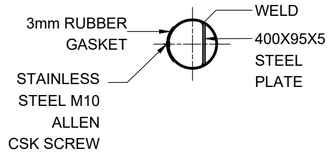

CONNECTION SUPPORT PLATE

DETAIL OF CONTROLLER BASE

CONNECTION BOX DETAIL

NOTE :
1. AFTER MANUFACTURE, ALL MILD STEEL TO BE HOT-DIPPED GALVANISED TO SABS 121

No.	DATE	ADDITIONS AND AMENDMENTS
0	OCT - 2023	ORIGINAL VERSION

STANDARD PLANS

WESTERN CAPE GOVERNMENT
DEPARTMENT OF INFRASTRUCTURE
TRANSPORT INFRASTRUCTURE BRANCH

TRAFFIC SIGNALS

STANDARD POLE AND CONTROLLER BASE DETAILS

SCALE : N.T.S.

A2 ORIGINAL

INDEX NO.
WCS/90/2/D2

PLAN NO.
SHEET 2 OF 4

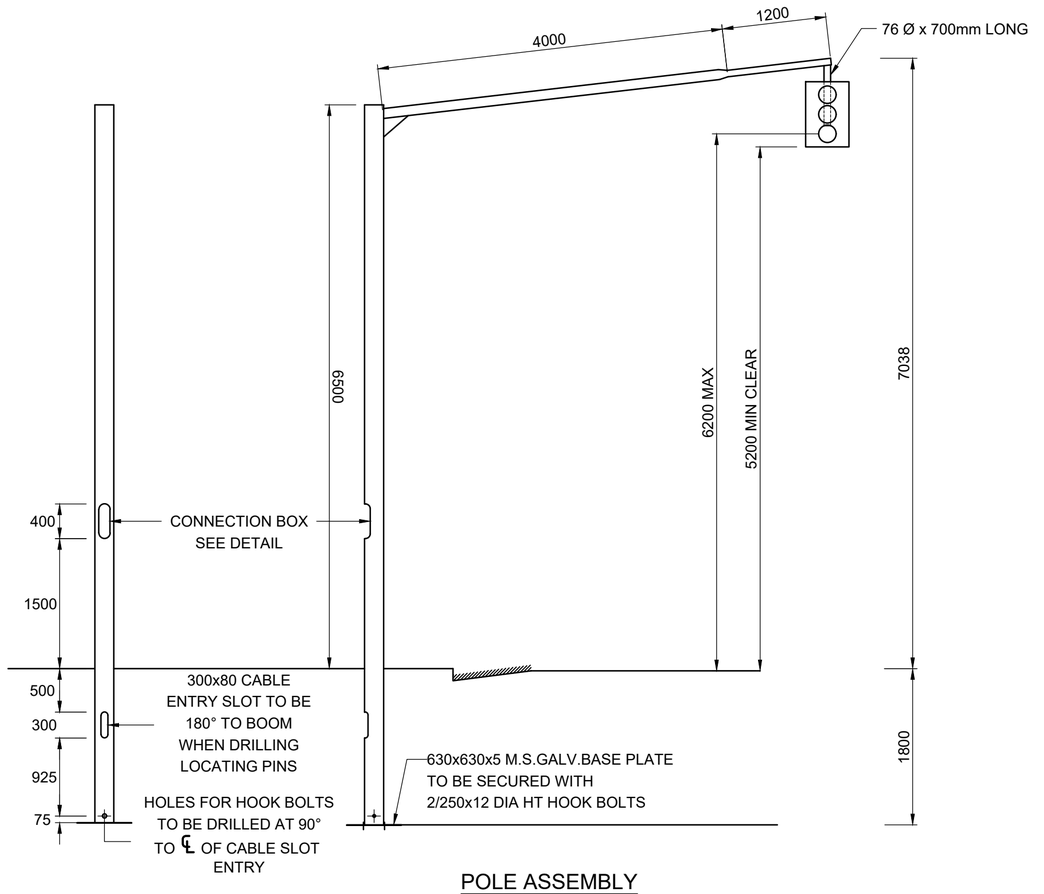

POLE ASSEMBLY

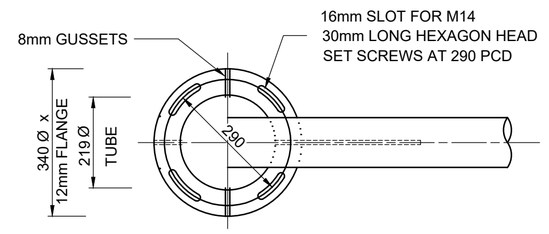

FLANGE SECTION

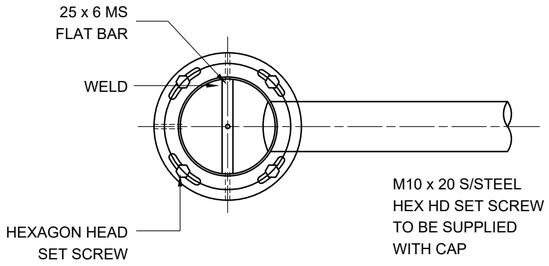

PLAN VIEW

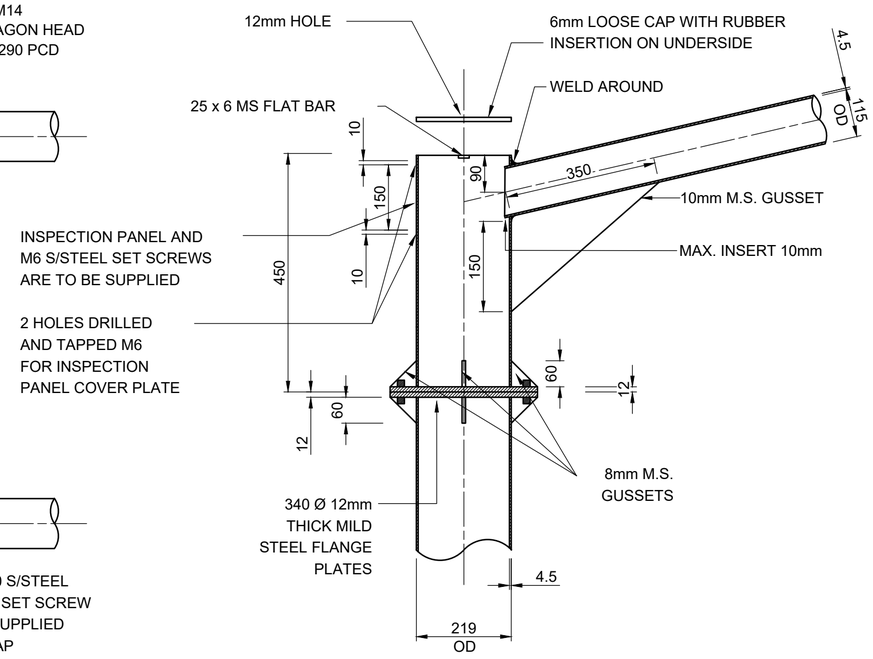

OUTREACH CONNECTION DETAIL

NOTES:

1. AFTER MANUFACTURE, ALL MILD STEEL IS TO BE HOT-DIP GALVANISED TO SABS 121

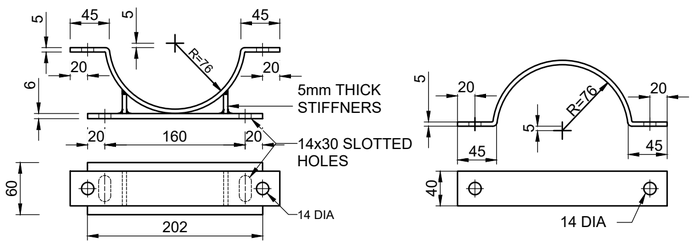

TRAFFIC SIGNAL MOUNTING BRACKET

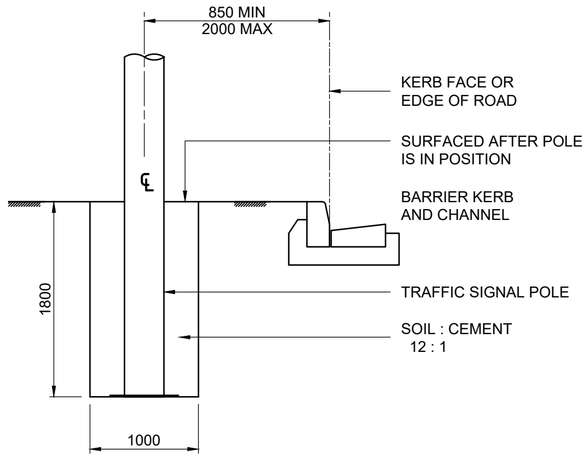

FOUNDATION

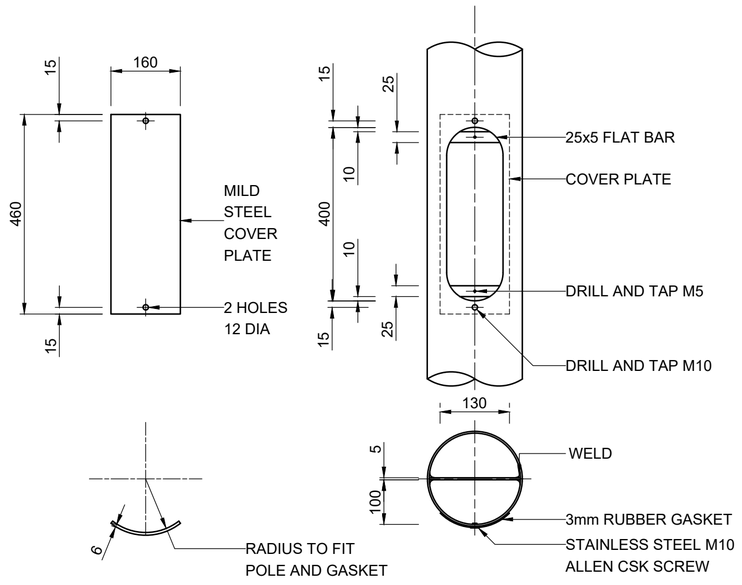

CONNECTION BOX AND COVER PLATE

No.	DATE	ADDITIONS AND AMENDMENTS
0	OCT - 2023	ORIGINAL VERSION

STANDARD PLANS

WESTERN CAPE GOVERNMENT
DEPARTMENT OF INFRASTRUCTURE
TRANSPORT INFRASTRUCTURE BRANCH

TRAFFIC SIGNALS

CANTILEVER POLE DETAILS

SCALE : N.T.S.

A2 ORIGINAL

INDEX NO.
WCS/90/2/D3

PLAN NO.
SHEET 3 OF 4

TYPICAL INTERSECTION LAYOUT

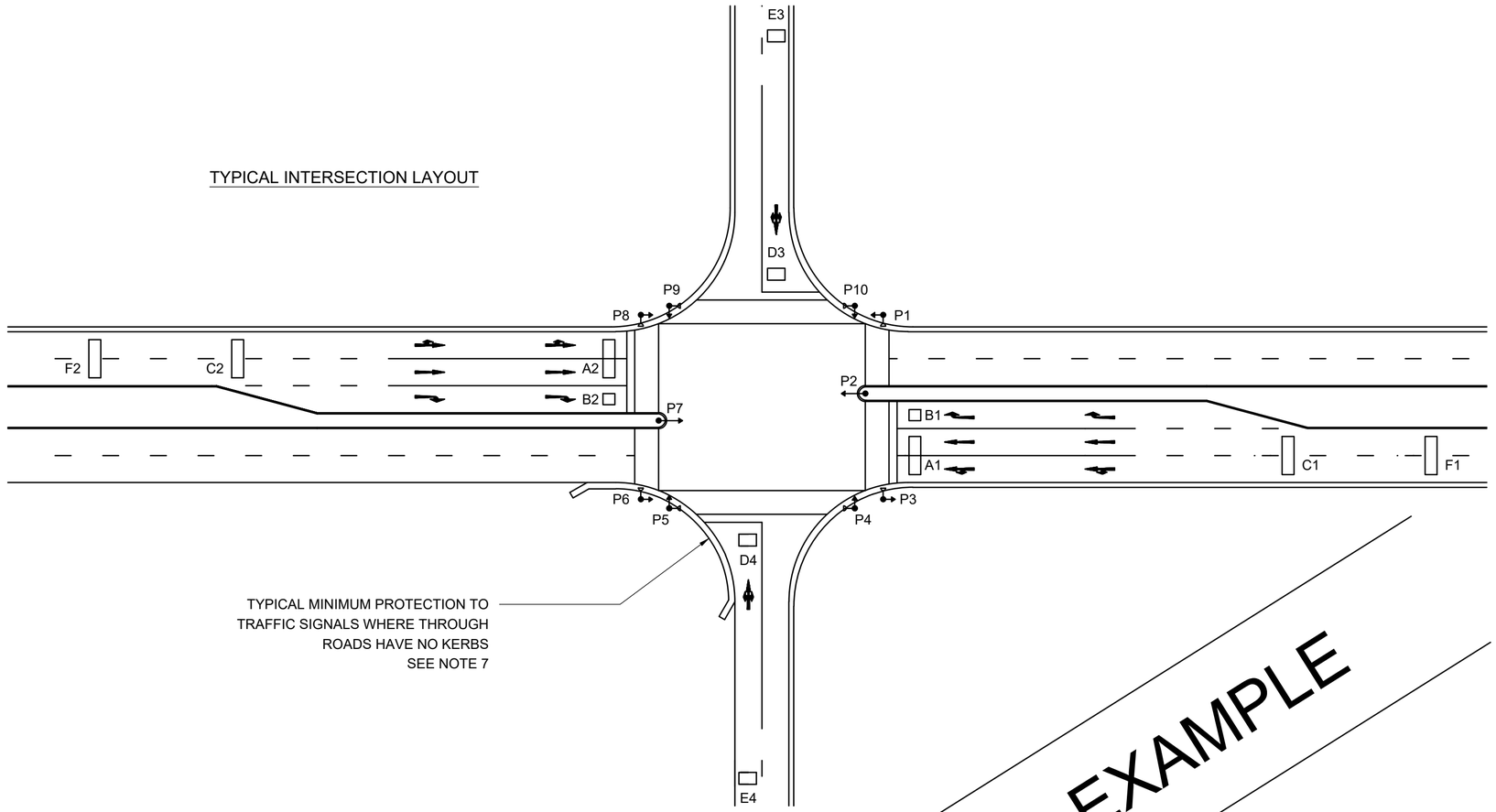

EXAMPLE

KEY TO SYMBOLS	
•P3	SIGNAL POLE WITH POLE NUMBER
▬	SIGNAL CONTROLLER
□B1	DETECTOR

SIGNAL FACE LEGEND		
	S1	S11
SIGNAL FACE		
SYMBOL		

NOTES :

1. PRECISE LOCATIONS OF POLES AND CONTROLLER TO BE VERIFIED BY THE ENGINEER ON SITE, AND TO BE IN ACCORDANCE WITH THE SOUTH AFRICAN ROAD TRAFFIC SIGNS MANUAL.
2. ALL SYMBOLS TO BE USED SHALL BE DESCRIBED.
3. ONLY SIGNAL FACE TYPES, TO BE USED AND THEIR SYMBOLS TO BE INDICATED IN THE LEGEND.
4. STOP LINE DETECTORS ARE TO BE SET BACK NOT LESS THAN 1m FROM STOP LINE.
5. SUBJECT TO LOCATION THE ENGINEER SHALL SPECIFY ONE OF THE FOLLOWING TYPES OF CONTROLLERS :
   (a) FULLY EQUIPPED AND A.T.C COMPATABLE
   (b) FULLY WIRED FOR A.T.C COMPATABILITY SUBJECT TO INSERTION OF MODULES WHEN REQUIRED
   (c) UPGRADABLE TO A.T.C COMPATABILITY WHEN REQUIRED.
6. WHERE THE WCG ASSISTS A LOCAL AUTHORITY WITH THE SUPPLY AND INSTALLATION OF TRAFFIC SIGNALS, A MAINTENANCE AGREEMENT BETWEEN PARTIES SHALL BE SIGNED PRIOR TO THE COMMISSIONING OF THE SIGNALS.
7. TRAFFIC SIGNALS TO BE PROTECTED BY INSTALLATION OF BARRIER KERBS.
8. THIS DRAWING MUST BE DETAILED FOR EACH SPECIFIC CONTRACT.

PHASE PLAN AND INTERVAL TIMING

STAGE	PHASE	TIME PERIOD	GREEN MIN	GREEN MAX	GREEN EXT	YELLOW MIN	YELLOW MAX	ALL RED	FLASHING RED
1	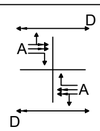	AM PEAK	16	30	2	3	5	2	
		PM PEAK	16	30	2	3	5	2	
		OFF PEAK	20	30	2	3	5	2	
		PEDESTRIAN	8	8	-	-	-	38-60	8

DETECTOR FUNCTION

STAGE	PHASE	CALL	EXTEND	MEASURES SPEED
1	A	B1 D3 E3 B2 D4 E4	A1 C1 A2 C2	F1 C1 F2 C2

TIMING PLAN

TIMING PLAN	ACTIVE CYCLE	PHASE A	MIN GREEN	MAX GREEN	YELLOW	YELLOW EXT.	RED							
	TIME	AM PEAK	16	30	33	35	37	47	50	52	65	71	74	76
		PM PEAK	-	-	-	-	-	-	-	-	-	-	-	-
		OFF PEAK	-	-	-	-	-	-	-	-	-	-	-	-

No.	DATE	ADDITIONS AND AMENDMENTS
0	OCT - 2023	ORIGINAL VERSION

STANDARD PLANS

WESTERN CAPE GOVERNMENT
DEPARTMENT OF INFRASTRUCTURE
TRANSPORT INFRASTRUCTURE BRANCH

TRAFFIC SIGNALS

TYPICAL TIMING PLAN

SCALE : N.T.S.

A2 ORIGINAL

INDEX NO. WCS/90/2/D4

PLAN NO. SHEET 4 OF 4

TYPICAL DRAWING FILING STRUCTURE



EXAMPLE 1: DIRECTORY TO BE SUBMITTED TO WCG FOR ISSUE OF INDEX NUMBERS

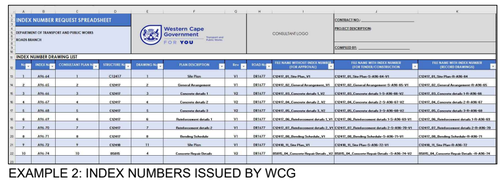

EXAMPLE 2: INDEX NUMBERS ISSUED BY WCG



EXAMPLE 3: SIGNED COPY OF DRAWINGS

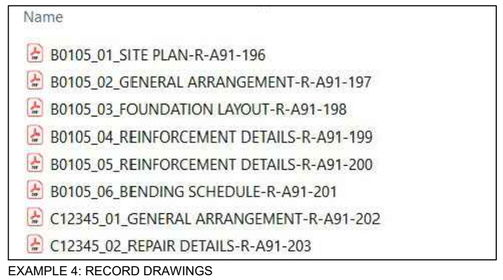

EXAMPLE 4: RECORD DRAWINGS

SCANNING OF RECORD DRAWINGS FOR WCG ARCHIVING:

1. SCANNING OF ORIGINAL SIGNED RECORD DRAWINGS FOR WCG ARCHIVING IS NOT REQUIRED. ALL DRAWING SUBMITTED, SIGNED AND STORED ELECTRONICALLY OR DIGITALLY IN PDF FORMAT.
2. PDF'S TO BE CLEANED OF ALL COMMENTS ADDED BY CAD SOFTWARE AND FILE SIZE TO BE REASONABLE (LESS THAN 1MB) EXCEPT FOR SITE PLANS, GENERAL ARRANGEMENTS AND ROADS GEOMETRY DRAWINGS.
3. DRAWINGS ARE TO BE CROPPED WHERE NECESSARY AND ROTATED FOR EASY VIEWING.

APPROVED				
THIS APPROVAL IS FOR PROCEDURAL AND ADMINISTRATIVE REVIEW PURPOSES ONLY AND DOES NOT ATTRACT LEGAL LIABILITY OF ANY KIND FROM WHATSOEVER CAUSE OR HOWEVER ARISING	UPGRADING OF DIVISIONAL ROAD 1234 KM 0.0 TO KM 50.0 NEAR BOT RIVER	P.R.E.'s FILE No. TPW 16/6/4/1/4-DR0123/C1100	SCALE 1 : 1000 SHEET 05 OF 13	PAPER SIZE A0
		CONTRACT No. C1100	WCG STRUCTURES PLAN No. N/A	
PROVINCIAL ROADS ENGINEER DATE	LAYOUT PLAN or LONGITUDINAL SECTION	CONSULTANT'S PLAN No. 200.101/C1100/01/RMRS/01	WCG INDEX No. GD49/524	VER V1

FOR ROADS

APPROVED				
THIS APPROVAL IS FOR PROCEDURAL AND ADMINISTRATIVE REVIEW PURPOSES ONLY AND DOES NOT ATTRACT LEGAL LIABILITY OF ANY KIND FROM WHATSOEVER CAUSE OR HOWEVER ARISING	PROPOSED BRIDGE No. 6123 ON DIVISIONAL ROAD 2173 AT KM 17.41 OVER THE DIEP RIVER	P.R.E.'s FILE No. TPW 16/6/4/1/5-DR0123/C1100	SCALE 1 : 1000 SHEET 01 OF 03	PAPER SIZE A0
		CONTRACT No. C1100	WCG STRUCTURES PLAN No. B5126/01	
PROVINCIAL ROADS ENGINEER DATE	SITE PLAN or CONCRETE LAYOUT or BALUSTRADE DETAILS	CONSULTANT'S PLAN No. 200.101/C1100/01/RMRS/01	WCG INDEX No. A79/20	VER V1

FOR STRUCTURES

DRAWING TITLE EXAMPLES: FOR DETAILS REFER TO WCS/90/D3

DRAWING CONTROL PROCEDURE:

1. ENSURE THAT ELECTRONIC DRAWING FILE NAMES ARE IDENTICAL TO THE DRAWING DESCRIPTION (EXCLUDING STRUCTURE NAME, E.G. C11935_01_SITE PLAN.PDF). SEE POINT 4 FOR MORE DETAILS ON FILE NAMING. PLACE ALL DRAWINGS OF THE STRUCTURE INSIDE THIS SPECIFIC STRUCTURE DIRECTORY (REFER TO EXAMPLE 1). THE MAXIMUM CHARACTER LENGTH IS 256 (INCLUDING PATH, SPACES, FILE EXTENSION, ETC).
2. THE CONSULTANT IS REQUIRED TO PROVIDE A FULL SET OF DRAWINGS IN .PDF FORMAT TO THE PROJECT COORDINATOR FOR THE ISSUING OF INDEX NUMBERS (REFER TO EXAMPLE 2). AN EXCEL DRAWING REGISTER TITLED "INDEX NUMBER REQUEST SPREADSHEET" MUST BE SUBMITTED WITH THE SET OF DRAWINGS AND MUST BE UPDATED AS AND WHEN REQUIRED. SUB-DIRECTORATE ROAD SYSTEMS WILL ISSUE WCG INDEX NUMBERS.
3. THE WCG INDEX NUMBERS WILL BE SENT TO THE CONSULTANT. THE CONSULTANT INSERTS THE WCG INDEX NUMBER ONTO THE DRAWINGS. THE WCG INDEX NUMBER WILL NOW FORM PART OF THE PDF FILE NAMES:
   - SIGNED COPY: C12417_01_SITE PLAN-S-A96-64-V1 (REFER TO EXAMPLE 3).
   - RECORD DRAWING: C12417_01_SITE PLAN-R-A96-64 (REFER TO EXAMPLE 4).
4. FILE NAMING CONVENTION TO BE APPLIED WHEN SUBMITTING ELECTRONIC DRAWINGS, WHICH MUST CORRESPOND TO THE DRAWING DESCRIPTION:

   STRUCTURE NO. _ DRAWING NO. _ DRAWING DESCRIPTION - (S) or (R) - INDEX No. _ REVISION NO.
   - C12417_02_GENERAL ARRANGEMENT-S-A96-35-V1
   - C12417_02_GENERAL ARRANGEMENT-R-A96-35 (NO REVISION NUMBER REQUIRED FOR RECORD DRAWINGS)

   FILE NAMING CONVENTION FOR MULTIPLE STRUCTURES ON A SINGLE DRAWING:

   A) NO MORE THAN TWO STRUCTURE NUMBERS SHOULD BE INCLUDED IN THE FILENAME;
      E.G., B6068-B6080_02_GENERAL ARRANGEMENT-S-A94-48-V2

   B) IN THE CASE OF MULTIPLE STRUCTURE NUMBERS ON ONE SPECIFIC ROAD, THE ROAD NUMBER SHOULD BE USED INSTEAD OF THE STRUCTURE NUMBERS.
      E.G., TR03104_01_REPAIR DETAILS-S-A93-46-V1

   C) IN THE CASE OF MULTIPLE STRUCTURE NUMBERS ACROSS MORE THAN ONE ROAD, THE WORD MULTIPLE SHOULD BE USED INSTEAD OF THE STRUCTURE NUMBERS.
      E.G., MULTIPLE_01_TYPICAL REPAIR DETAILS-R-A94-24

   IN THE CASE OF MULTIPLE STRUCTURES, A LIST OR TABLE SHOWING ALL THE STRUCTURE NUMBERS WITH ROAD NUMBER AND KM DISTANCES THAT ARE APPLICABLE TO THE DRAWING SHOULD BE PROVIDED ON THE DRAWING.
5. AN ECSA REGISTERED PROFESSIONAL WITH REQUIRED COMPETENCY AND AUTHORIZED BY THE CONSULTANT, DIGITALLY SIGNS (A CERTIFIED DIGITAL SIGNATURE IS PREFERRED) THE DRAWINGS AFTER THE DESIGNER AND CHECKER HAVE APPROVED AND ADDED THEIR INITIAL AND SURNAME TO THE DRAWING, AND THEN SUBMITS IT TO THE PROJECT COORDINATOR FOR SIGNATURE BY THE RELEVANT DESIGN CHIEF ENGINEER/S. THE CONSULTING ENGINEER'S FULL NAME AND ECSA PR ENG REGISTRATION NUMBER MUST BE SPECIFIED WITH THE SIGNATURE.
6. WCG SIGNS AND RETURNS THE PDF DRAWINGS TO THE CONSULTANT. THE SIGNED DRAWINGS ARE TO BE RETAINED BY THE CONSULTING ENGINEER UNTIL SEVEN YEARS AFTER THE EXPIRY OF THE MAINTENANCE PERIOD AND AFTER SUBMISSION OF THE CONSTRUCTION RECORD DRAWINGS IN PDF FORMAT.
7. AMENDMENTS TO DRAWINGS ARE TO BE HANDLED AS FOLLOWS: AMENDMENTS TO DRAWINGS THAT HAVE BEEN APPROVED SHALL BE CONFIRMED WITH WCG. WCG WILL CONFIRM IF THE AMENDED DRAWINGS WILL REQUIRE TO BE RESUBMITTED FOR SIGNATURE.

   DESIGN CHIEF ENGINEER TO CONFIRM IF MINOR REVISIONS REQUIRE SIGNATURE BEFORE THE DRAWINGS ARE ISSUED, INTERNAL CONSULTANT REVISIONS THAT ARE NOT ISSUED SHOULD NOT RECEIVE NEW REVISIONS. IF THE CHIEF ENGINEER CONFIRMS NO SIGNATURE IS REQUIRED FOR THE NEW REVISION (INCLUDING TENDER TO CONSTRUCTION), THE CONSULTANT MUST ADD A STAMP TO THE DRAWING TO INDICATE WHEN THE PREVIOUS REVISION WAS SIGNED AND THAT THE CHIEF ENGINEER HAS AGREED TO THE NEW REVISION IN WRITING. RESTART THE REVISION NUMBERS UNDER EACH PROJECT PHASE (TENDER, CONSTRUCTION AND RECORD). IT IS IMPORTANT TO NOTE THE DESCRIPTIONS LISTED BELOW (EXCLUDING VA, V1 & R) ARE NOT TO BE USED DIRECTLY ON THE TITLE BLOCKS UNDER ADDITIONS AND AMENDMENTS, RATHER A SHORT DESCRIPTION OF THE REVISION SHOULD BE PROVIDED. REVISION CLOUDS TO BE ADDED TO THE DRAWING WITH REVISION NUMBERS TO INDICATE WHERE CHANGES HAVE BEEN MADE.

   TENDER DRAWING REVISIONS:
   - VA - ISSUED FOR TENDER;
   - VB - FIRST MAJOR REVISION (E.G., INCREASED SPAN LENGTH);
   - VB.1 - FIRST MINOR REVISION (E.G., MINOR TITLE BLOCK CORRECTIONS);
   - VB.2 - SECOND MINOR REVISION;
   - VC - SECOND MAJOR REVISION

   CONSTRUCTION DRAWING REVISIONS:
   - V1 - ISSUED FOR CONSTRUCTION;
   - V2 - FIRST MAJOR REVISION;
   - V2.1 - FIRST MINOR REVISION;
   - V2.2 - SECOND MINOR REVISION;
   - V3 - SECOND MAJOR REVISION;
   - V3.1 - FURTHER MINOR REVISION;
   - V3.2 - FURTHER MINOR REVISION

   RECORD DRAWINGS (NO REVISION PERMITTED):
   - R - RECORD DRAWING (AS-BUILT)

   THE REVISION LIST GIVEN ABOVE IS NOT EXHAUSTIVE AND AS MANY REVISIONS AS ARE REQUIRED SHOULD BE USED.
8. SUBMISSION OF FINAL CONSTRUCTION RECORD DRAWINGS (AS-BUILT), IN ELECTRONIC PDF FORMAT:
   ONCE THE PROJECT IS COMPLETED, THE CONSULTANT MUST UPDATE EACH DRAWING WITH THE AS-BUILT INFORMATION AND THE DRAWING VERSION NUMBER TO "R" IN THE TITLE BLOCK. REVISION R SHOULD BE THE ONLY ENTRY ON THE REVISION TABLE.

   RECORD DRAWINGS (AS-BUILT) SIGNED BY CONSULTANT TO BE SUBMITTED TO THE CONTRACT COORDINATOR AS PER THE REQUIREMENTS OF THE CLOSE-OUT REPORT PRO-FORMA, AVAILABLE ON THE ROADS BRANCH WEBSITE (RNIS):

   DOCUMENTS - PRO-FORMA CONTRACT DOCUMENTS - CLOSE OUT

   THE DESIGN CHIEF ENGINEERS WILL SIGN THE RECORD DRAWINGS ONCE THE REVIEW HAS BEEN COMPLETED AND ALL THE NECESSARY CLOSE-OUT DOCUMENTATION HAS BEEN PROVIDED. THE SIGNED RECORD DRAWINGS WILL THEN BE UPLOADED ONTO RELEVANT WCG SYSTEMS.

NOTES:

1. FOR WCG STRUCTURE AND STRUCTURE INDEX NUMBERS (A..../....)
   MRS N ADAMS..... najma.adams@westerncape.gov.za
2. FOR WCG ROAD DESIGN NUMBERS (GD..../....)
   MR R KOEBERG..... ryan.koeberg@westerncape.gov.za
3. REQUEST CAD TEMPLATE OF TITLE BLOCK FROM WCG DESIGN SUPPORT OFFICE.

No.	DATE	ADDITIONS AND AMENDMENTS
0	OCT - 2023	ORIGINAL VERSION

STANDARD PLANS

WESTERN CAPE GOVERNMENT
DEPARTMENT OF INFRASTRUCTURE
TRANSPORT INFRASTRUCTURE BRANCH

DRAWING TITLE BLOCKS AND DRAWING CONTROL PROCEDURE

DRAWING FILING STRUCTURE

SCALE : N.T.S.

A2 ORIGINAL

INDEX NO.
WCS/90/3/D1

PLAN NO.
SHEET 1 0F 3

25

25

TITLE BLOCK EDGE

A0 SHEET EDGE

OPTIONAL PLAN AREA

25

DESIGN SPEED=
XX km/h



OR

100
98
96
94
92
90
88
86
84
82
80
78
76
74
72
70
68
66
64

Datum 62

STAKE VALUE	
GROUND C/L LEVELS	
VERTICAL ALIGNMENT / DESIGNED ROAD LEVELS / LEFT EDGE (-3.4)	
VERTICAL ALIGNMENT / DESIGNED ROAD LEVELS / CENTRE LINE	
VERTICAL ALIGNMENT / DESIGNED ROAD LEVELS / RIGHT EDGE (3.4)	
VERTICAL ALIGNMENT / GRADES	
VERTICAL ALIGNMENT / VERTICAL CURVES	
SUPERELEVATION + 0% -	
HORIZONTAL CURVES	

NOTES:

1. FOR WCG ROAD DESIGN NUMBERS (GD..../....) MR. KOEBERG.....ryan.koeberg@westerncape.gov.za
2. REQUEST CAD TEMPLATE OF TITLE BLOCK FROM WCG DESIGN SUPPORT OFFICE.

NO.	DATE	ADDITIONS, AMENDMENTS AND REVISIONS	PROVINCIAL CHIEF ENG.	CONSULT. ENG.

DESIGNED BY: | DETAILED BY:

CHECKED BY: | CHECKED BY:

CONSULTANT'S LOGO INCLUDING PHYSICAL ADDRESS AND CONTACT DETAILS

CONSULTANT'S APPROVAL

SIGN: _____

NAME: _____

ECSA Pr No. _____

DATE: _____

Western Cape Government FOR YOU Infrastructure

APPROVED

THIS APPROVAL IS FOR PROCEDURAL AND ADMINISTRATIVE REVIEW PURPOSES ONLY AND DOES NOT ATTRACT LEGAL LIABILITY OF ANY KIND FROM WHATSOEVER CAUSE OR HOWSEVER ARISING

PROVINCIAL ROADS ENGINEER

DATE _____

UPGRADING OF DIVISIONAL ROAD 1234 KM 0.0 TO KM 50.0
NEAR BOT RIVER

LONGITUDINAL SECTION

P.R.E.'s FILE No.

CONTRACT No.

CONSULTANT'S PLAN No.

SCALE 1: 1000

SHEET XX OF XX

PAPER SIZE A0

WCG STRUCTURES PLAN No.

WCG INDEX No. GD..../.....

25

No.	DATE	ADDITIONS AND AMENDMENTS
0	OCT - 2023	ORIGINAL VERSION

STANDARD PLANS

WESTERN CAPE GOVERNMENT
DEPARTMENT OF INFRASTRUCTURE
TRANSPORT INFRASTRUCTURE BRANCH

DRAWING TITLE BLOCKS AND DRAWING CONTROL PROCEDURE

LONGITUDINAL SECTION TITLE BLOCK

SCALE : N.T.S.

A2 ORIGINAL

INDEX NO. WCS/90/3/D2

PLAN NO. SHEET 2 0F 3

A0 PAPER EDGE

25mm

25mm

LAYOUT FOR A0 PAPER SIZE

WCG BLUE: PANTONE REFLEX BLUE
CMYK: C100; M89; Y0; K10

WCG BLUE: CAD COLOURS
R0 ; G20 ; B137
HEX # 001489.

ORIGINAL TO BE SIGNED BY AN ECSA REGISTERED PROFESSIONAL AUTHORIZED BY THE COMPANY (DIRECTOR OR PARTNER)

CONSULTANT'S APPROVAL		ACCEPTANCE
SIGN: JPublic	Western Cape Government FOR YOU Infrastructure	THIS APPROVAL IS FOR PROCEDURAL AND ADMINISTRATIVE REVIEW PURPOSES ONLY AND DOES NOT ATTRACT LEGAL LIABILITY OF ANY KIND FROM WHATSOEVER OR HOWEVER ARISING
NAME: JOANNE PUBLIC		
ECSA Pr No. 201500000		PROVINCIAL ROADS ENGINEER
DATE: 2020/03/26		DATE:

WHO MAY SIGN : FOR BRIDGES : CHIEF ENGINEER - STRUCTURES
FOR MAJOR CULVERTS : CHIEF ENGINEER - STRUCTURES
ROAD DESIGN : CHIEF ENGINEER - GEOMETRICS
TRAFFIC ENGINEERING: CHIEF ENGINEER - TRAFFIC
PAVEMENT DESIGN : CHIEF ENGINEER - MATERIALS
ALL OTHER DRAWINGS : CHIEF ENGINEER - GEOMETRICS

WESTERN CAPE GOVERNMENT LOGO
(FOR DETAILS ALWAYS REFER TO THE WCG BRANDING MANUAL TO ENSURE BRANDING IS APPLIED CORRECTLY)

DRAWING TITLE BLOCK EDGE

IF APPLICABLE, ADD COMPANY LOGO OF SUB-CONSULTANT THAT HAS DEVELOPED DRAWING OR SIGNED OFF THE DESIGN.

TITLE BLOCK OUTER BORDER LINE WEIGHT = 1.4mm

CONSULT. ENG.	DESIGNED BY:	DETAILED BY:	CONSULTANTS LOGO INCLUDING PHYSICAL ADDRESS AND CONTACT DETAILS	SUB-CONSULTANT LOGO INCLUDING ADDRESS AND CONTACT DETAILS	CONSULTANT'S APPROVAL
					SIGN:
	CHECKED BY:	CHECKED BY:			NAME:
					ECSA Pr No.
					DATE:

THIS IS THE WCG DRAWING INDEX ("GD") NUMBER THAT IS THE OFFICIAL RECORD NUMBER TO BE OBTAINED FROM THE DESIGN SUPPORT SERVICES OFFICE OR VIA THE PROJECT COORDINATOR (THIS IS A UNIQUE NUMBER AND SHALL NOT BE DUPLICATED) SEE DRAWING CONTROL PROCEDURE DWG WCS/90/3/D1

THIS CONTRACT NUMBER SHALL BE THE REGISTERED PROJECT NUMBER TO BE OBTAINED FROM THE PROJECT OFFICE OR PROJECT COORDINATOR

THIS DESCRIPTION SHALL BE THE REGISTERED PROJECT DESCRIPTION TO BE OBTAINED FROM THE PROJECT OFFICE OR PROJECT COORDINATOR

THIS THE UNIFORM FILE NUMBER OBTAINED FROM FILE REGISRTY - RECORD MANAGEMENT OR PROJECT OFFICE

2) ROADWORKS DRAWINGS: TPW16/6/4/1/5-ROAD NUMBER/CONTRACT NUMBER (ROAD NUMBER MAY BE OMITTED FOR FLOOD DAMAGE CONTRACTS)

PROJECT TITLE 1 (ROAD No. AND PROJECT DESCRIPTION) PROJECT TITLE 2 (SUBSECTION IF APPLICABLE AND LOCATION)	P.R.E's FILE NO. DO\14\6\4\1\4-DR01234/C1100	SCALE 1:1000 SHEETS 05 OF 13	ORIGINAL PAPER SIZE A0
	CONTRACT NO. C1100	WCG STRUCTURE PLAN NO. N/A	
DRAWING TITLE (DRAWING/DETAIL/DESIGN DESCRIPTION) FROM SV/KM xx.xxx TO SV/KM xx.xxx	CONSULTANTS DWG NO. 200.101/C1100/01/RMRS/01	WCG INDEX NO. GD49/524	VER V1

DRAWING/DETAIL/DESIGN DESCRIPTION
DESCRIPTION TO BE CONCISE
(WHERE APPLICABLE, INCLUDE KM DISTANCES)

ROAD DESIGN: PROJECT AND DRAWING DESCRIPTIONS

CONSULTING ENGINEER'S DRAWING NUMBER HERE
(DO NOT USE THIS NUMBER IN DRAWING FILE NAMES WHEN SUBMITTING TO WCG)

FOR VERSION NUMBERING
SEE DRAWING CONTROL PROCEDURE
DWG WSC/90/3/D1

THIS IS THE WCG STRUCTURE NUMBER/DRAWING NUMBER. ONLY MAJOR STRUCTURES RECEIVE STRUCTURE NUMBERS

THIS CONTRACT NUMBER SHALL BE THE REGISTERED PROJECT NUMBER TO BE OBTAINED FROM THE PROJECT OFFICE OR PROJECT COORDINATOR

THIS DESCRIPTION SHALL BE THE REGISTERED PROJECT DESCRIPTION TO BE OBTAINED FROM THE PROJECT OFFICE OR PROJECT COORDINATOR

THIS THE UNIFORM FILE NUMBER OBTAINED FROM FILE REGISRTY - RECORD MANAGEMENT OR PROJECT OFFICE

1) STRUCTURE DRAWINGS: DO\14\6\4\1\4-ROAD NUMBER/CONTRACT NUMBER (ROAD NUMBER MAY BE OMITTED FOR FLOOD DAMAGE CONTRACTS)

PROJECT TITLE 1 (STRUCTURE No. AND ROAD No.) PROJECT TITLE 2 (KM POSITION AND LOCATION/PLACE)	P.R.E's FILE NO. DO\14\6\4\1\5-DR01234/C1100	SCALE 1:1000 SHEETS 01 OF 03	ORIGINAL PAPER SIZE A0
	CONTRACT NO. C1100	WCG STRUCTURE PLAN NO. B5126/01	
DRAWING TITLE (DRAWING/DETAIL/DESIGN DESCRIPTION)	CONSULTANTS DWG NO. 200.101/C1100/01/RMRS/01	WCG INDEX NO. A79/20	VER V1

DRAWING/DETAIL/DESIGN DESCRIPTION
DESCRIPTION TO BE CONCISE
(WHERE APPLICABLE, INCLUDE KM DISTANCES)

STRUCTURE DESIGN: PROJECT AND DRAWING DESCRIPTIONS

CONSULTING ENGINEER'S DRAWING NUMBER HERE
(DO NOT USE THIS NUMBER IN DRAWING FILE NAMES WHEN SUBMITTING TO WCG)

STRUCTURE DRAWING INDEX ("A") NUMBER
(MAJOR STRUCTURE ONLY) INCLUDE HERE.
TO BE OBTAINED FROM THE SD ROAD SYSTEMS OFFICE
SEE DRAWING CONTROL PROCEDURE DWG WCS/90/3/D1

FOR VERSION NUMBERING
SEE DRAWING CONTROL PROCEDURE
DWG WCS/90/3/D1

REVISION/VERSION NUMBER :
V1 = ISSUED FOR CONSTRUCTION
V2 = FIRST MAJOR REVISION
V2.1 = FIRST MINOR REVISION
(SEE DRAWING CONTROL PROCEDURES FOR FURTHER INFORMATION)

SHORT DESCRIPTION OF REVISION OR VERSION

INITIALS OF CONSULTING ENGINEER WHO SIGNED THE CURRENT OR PREVIOUS REVISIONS

INITIALS OF PROVINCIAL CHIEF ENGINEER WHO SIGNED THE CURRENT OR PREVIOUS REVISIONS

CONSULTING ENG'S DESIGNER AND DESIGNER CHECKER (INCLUDE ECSA Pr No. IF APPLICABLE)

DRAUGHTING/DETAILING BY AND CHECKED BY (INCLUDE ECSA Pr No. IF APPLICABLE)

NO.	DATE	ADDITIONS, AMENDMENTS AND REVISIONS	PROVINCIAL CHIEF ENG.	CONSULT. ENG.	DESIGNED BY:	DETAILED BY:
V1	02/11/2021	ISSUED FOR CONSTRUCTION			I.N. SURNAME 20120001	A.B. LASTNAME
					CHECKED BY:	CHECKED BY:
					C.D. CHECKERS 19810110	E.X. CELLENT 20110062

THE CONSULTANT CERTIFIES THAT THE DESIGNER, DETAILER AND CHECKER HAVE CONSENTED TO HAVE THEIR NAMES BEING INSERTED ON THE DRAWING AND THAT THEY HAVE SEEN AND APPROVED THE DRAWING

CONTACT THE PROJECT COORDINATOR TO OBTAIN THE LATEST IMAGE OF THE WESTERN CAPE GOVERNMENT LOGO

IF THE CHIEF ENGINEER CONFIRMS NO SIGNATURE IS REQUIRED FOR THE NEW REVISION (INCLUDING TENDER TO CONSTRUCTION), THE CONSULTANT MUST ADD A STAMP TO THE DRAWING TO INDICATE WHEN THE PREVIOUS REVISION WAS SIGNED AND THAT THE CHIEF ENGINEER HAS AGREED TO THE NEW REVISION IN WRITING.

EXAMPLE STAMP

APPROVED
THE MASTER PDF IS HELD AT THE
"ENTER CONSULTANT NAME"
OFFICE

THE MASTER WAS APPROVED BY
"ENTER CHIEF ENGINEER INITIALS AND SURNAME"
ON THE FOLLOWING DATE:
YYYY/MM/DD

TITLE BLOCK INFO BORDER LINE WEIGHT = 1.4mm

TITLE BLOCK INFO DIVIDING LINES LINE WEIGHT = 0.7mm

LEAVE THIS SPACE FOR PROJECT STATUS

"STAMP"
e.g
TENDER

TITLE BLOCK ROW LINES LINE WEIGHT = 0.25mm

NO.	DATE	ADDITIONS, AMENDMENTS AND REVISIONS	PROVINCIAL CHIEF ENG.	CONSULT. ENG.	DESIGNED BY:	DETAILED BY:	CONSULTANTS LOGO INCLUDING PHYSICAL ADDRESS AND CONTACT DETAILS	CONSULTANT'S APPROVAL	ACCEPTANCE
								SIGN:	THIS APPROVAL IS FOR PROCEDURAL AND ADMINISTRATIVE REVIEW PURPOSES ONLY AND DOES NOT ATTRACT LEGAL LIABILITY OF ANY KIND FROM WHATSOEVER OR HOWEVER ARISING
								NAME:	
					CHECKED BY:	CHECKED BY:		ECSA Pr No.	PROVINCIAL ROADS ENGINEER
								DATE:	DATE:

Western Cape Government FOR YOU Infrastructure

P.R.E's FILE NO.	SCALE	ORIGINAL PAPER SIZE
	SHEETS OF	A0
CONTRACT NO.	WCG STRUCTURE PLAN NO.	
CONSULTANTS DWG NO.	WCG INDEX NO.	VER

25mm

A0 PAPER EDGE

No.	DATE	ADDITIONS AND AMENDMENTS
0	OCT - 2023	ORIGINAL VERSION

STANDARD PLANS

WESTERN CAPE GOVERNMENT
DEPARTMENT OF INFRASTRUCTURE
TRANSPORT INFRASTRUCTURE BRANCH

DRAWING TITLE BLOCKS

WCG TITLE BLOCK DETAILS AND LAYOUT

SCALE : N.T.S.

A2 ORIGINAL

INDEX NO.
WCS/90/3/D3

PLAN NO.
SHEET 3 0F 3

NOTES :
- ALL TEXT TO BE ARIAL (BOLD)
- ALL MEASUREMENTS IN MILLIMETERS
- THESE MEASUREMENTS ARE FOR A2 PAPER SIZE

Reference: TPW16/6/4/1/2-DRxxxx/Cxxxx

EDGE OF A2 ORIGINAL

Western Cape Government
FOR YOU
Infrastructure

EDGE OF BRANDING LINE
STARTS AT "W"

TENDER DOCUMENT

VOLUME 4

BOOK 1 OF 4

CONTRACT No. C863.1

FLOOD DAMAGE REPAIR TO STRUCTURES IN THE CITRUSDAL AND PIKETBERG AREA

DRAWINGS FOR STRUCTURES AND ROAD WORKS

SEPTEMBER 2010

ISSUED BY:

EXECUTIVE MANAGER : ROADS BRANCH
DEPARTMENT OF INFRASTRUCTURE
WESTERN CAPE GOVERMENT
PO BOX 2603
CAPE TOWN
8000

PREPARED BY:

CONSULTING ENGINEERS (PTY) LTD
P.O. BOX 1347
CAPE TOWN
8000
TEL : (021) 481 2400
FAX : (021) 424 5588

EMBLEM

NAME OF TENDERER:.....

No.	DATE	ADDITIONS AND AMENDMENTS
0	OCT - 2023	ORIGINAL VERSION

STANDARD PLANS

WESTERN CAPE GOVERNMENT
DEPARTMENT OF INFRASTRUCTURE
TRANSPORT INFRASTRUCTURE BRANCH

TENDER DOCUMENTS

A2 DRAWING BOOK FRONT COVER

SCALE : N.T.S.

A2 ORIGINAL

INDEX NO. WCS-90-4-D1

PLAN NO. SHEET 1 OF 2

NOTES :
- ALL TEXT TO BE ARIAL (BOLD)
- ALL MEASUREMENTS IN MILLIMETERS
- THESE MEASUREMENTS ARE FOR A2 PAPER SIZE

Reference: TPW16/6/4/1/2-DRxxxx/Cxxxx

EDGE OF A2 ORIGINAL

Western Cape Government
FOR YOU
Infrastructure

EDGE OF BRANDING LINE
STARTS AT "W"

TENDER DOCUMENT

VOLUME 5

BOOK 1 OF 4

CONTRACT No. C863.1

FLOOD DAMAGE REPAIR TO STRUCTURES IN THE CITRUSDAL AND PIKETBERG AREA

MATERIALS REPORT

SEPTEMBER 2010

ISSUED BY:

EXECUTIVE MANAGER : ROADS BRANCH
DEPARTMENT OF INFRASTRUCTURE
WESTERN CAPE GOVERMENT
PO BOX 2603
CAPE TOWN
8000

PREPARED BY:

CONSULTING ENGINEERS (PTY) LTD
P.O. BOX 1347
CAPE TOWN
8000
TEL : (021) 481 2400
FAX : (021) 424 5588

EMBLEM

NAME OF TENDERER:.....

No.	DATE	ADDITIONS AND AMENDMENTS
0	OCT - 2023	ORIGINAL VERSION

STANDARD PLANS

WESTERN CAPE GOVERNMENT
DEPARTMENT OF INFRASTRUCTURE
TRANSPORT INFRASTRUCTURE BRANCH

TENDER DOCUMENTS

A3 MATERIALS INVESTIGATION REPORT COVER

SCALE : N.T.S.

A2 ORIGINAL

INDEX NO. WCS-90-4-D2

PLAN NO. SHEET 2 OF 2

Thursday, 11 July 2024 14:14:27

ADAM TAS ROAD

LIMIT OF CONSTRUCTION

Ex. STW Ø375mm

94.75

95.00

NEW ELECTRICAL SLEEVES

NEW SLIP LANE

ATP7

Ex. WM Ø150mm

95.25

95.50

NEW ELECTRICAL SLEEVES

RV05

STRAND ROAD

Ex. STW Ø425mm

Ex. BOX CULVERT (1.02W x 0.75H)

95.75

Ex. STW Ø900mm

NEW TELECOMMUNICATION AND ELECTRICAL SLEEVES

Ex. STW Ø300mm

96.00

Ex. WM Ø200mm

Ex. FS Ø160mm

NEW ACCESS ROAD

RV06

NEW ELECTRICAL SLEEVES

Ex. STW Ø300mm

NEW TELECOMMUNICATION AND ELECTRICAL SLEEVES

EXISTING INTERSECTION TO BE CLOSED OFF

NEW ELECTRICAL SLEEVES

HEROLD STREET

EXISTING STORMWATER CHANNEL TO BE FORMALIZED VIA UNDERGROUND PIPE SYSTEM

NEW Ø110mm FS CONNECTION

PROPOSED POSITION AND LAYOUT OF NEW ELECTRICAL SUB-STATION

NEW Ø25mm W CONNECTION

EXISTING BUILDING TO BE DEMOLISHED AND REBUILD

Ex. FS Ø160mm

EDGE OF PROPOSED SIDEWALK

NEW ELECTRICAL SLEEVES

Ex. STW Ø900mm

STASIE STREET

RIGHT OF WAY SERVITUDE

FURROW SERVITUDE

NEW EMBAYMENT FOR ACCESS TO EXISTING PROPERTIES

NEW TELECOMMUNICATION AND ELECTRICAL SLEEVES

Ex. FS Ø160mm

NEW CARRIAGEWAY CROSSING FOR ACCESS TO NEW ELECTRICAL SUB-STATION

DU TOIT STREET

NEW ELECTRICAL SLEEVES

LIMIT OF CONSTRUCTION

EXISTING PRASA RAILWAY LINES

Ex. ELECT. HV CABLE

STELLENBOSCH STATION

EXISTING PEDESTRIAN SIDEWALK TO REMAIN AS IS

REVISED MEDIAN

Ex. 66kV A/CABLE

Ex. 66kV OIL FILLED CABLE

ADAM TAS ROAD

LIMIT OF CONSTRUCTION

LD1

NOTES / LEGEND

- EXISTING STORMWATER PIPE
- EXISTING SEWER PIPE
- EXISTING WATER PIPE
- EXISTING TELECOMMUNICATION
- EXISTING POWER CABLE
- EXISTING ROBOT
- EXISTING STREET LIGHT
- BENCHMARK
- NEW STORMWATER PIPE
- NEW FOUL SEWER PIPE
- NEW WATER PIPE
- NEW FIRE WATER PIPE
- NEW IRRIGATION PIPE
- NEW SUBSOIL DRAINAGE PIPE
- NEW TELECOMMUNICATION SLEEVE
- NEW ELECTRICAL SLEEVE
- NEW STORMWATER MANHOLE
- NEW FOUL SEWER MANHOLE
- NEW TELECOMMUNICATION MANHOLE
- NEW ELECTRICAL MANHOLE
- NEW STORMWATER CATCHPIT
- FIRE HYDRANT
- BULK WATER METER
- BULK IRRIGATION METER
- WATER VALVE
- IRRIGATION VALVE
- NEW TREES

NOTE:
- ALL SERVICES ARE INDICATIVE ONLY AND SHOULD BE VERIFIED ON SITE BY THE CONTRACTOR
- CONTOURS REPRESENT NATURAL GROUND LEVELS

APPROVED BY COUNCIL / CLIENT

CITY ENGINEER / CLIENT | REG. NO. | DATE

AMENDMENTS CODE

A,B,C... = BEFORE TENDER
T0 = TENDER DRAWING
1,1,2,3... = AFTER TENDER
2 = AS-BUILT

A: BY CLIENT
B: BY ARCHITECT
C: BY MECHANICAL OR ELECTRICAL
D: BY BVI
E: BY OTHER ( )

DATE	INITIAL	No./CODE	REVISION DESCRIPTION
20/07/2024	FMG	T0/D	ISSUED FOR TENDER

CLIENT

STELLENBOSCH
INTELLIGENTE STAD MET KARAKTER
MUNICIPALITY • UMASIPALA • MUNISIPALITEIT

bvi 50 YEAR CELEBRATION EST 1967-2017
• ENGINEERING • PROCUREMENT • MANAGEMENT
Registration No. 1998/003115/07

PROVINCE	OFFICE		E-MAIL
Gauteng	Pretoria	(012) 940-7777	pta@bvi.co.za
	Polokwane	(015) 291-5400	plk@bvi.co.za
Free State	Bloemfontein	(051) 447-2727	bfn@bvi.co.za
	Welkom	(057) 353-0400	wel@bvi.co.za
Northern Cape	Upington	(054) 331-6600	upt@bvi.co.za
	Springbok	(027) 712-8014	spb@bvi.co.za
KwaZulu-Natal	Durban	(031) 266-8302	dbn@bvi.co.za
	Empangeni	(035) 772-6112	emp@bvi.co.za
Eastern Cape	Port Elizabeth	(041) 373-4243	hse@bvi.co.za
	East London	(043) 735-3080	bg@bvi.co.za
Western Cape	Cape Town	(021) 527-7000	cpt@bvi.co.za

Visit or contact us online at www.bvigroup.co.za

PROJECT

REALIGNMENT OF THE R44/R310 AND ALEXANDER STREET JUNCTION

DRAWING TITLE

GENERAL SERVICES LAYOUT - PHASE 1

APPROVED BY BVI

ENGINEER/TECHNOLOGIST | REG. NO. | DATE

SCALE	1:300 @ A0	DRAWN	JAS
DESIGNED	FMG	CHECKED	LP
PLAN NUMBER		REVISION NO.	DATE SAVED
34092.00-101-01		T0	11 July 2024

34092.00-101-01 REVT0_(SERVICES LAYOUT).DWG

O:\PROJECTS DRAWINGS\34000 - 34999\34092.00\CIVIL\TENDER DRAWINGS\34092.00-101-01 REVT0_(SERVICES LAYOUT).DWG

0 10 50 100

Wednesday, 17 July 2024 11:51:35

ADAM TAS ROAD
LIMIT OF CONSTRUCTION
Ex. STW Ø375mm
84.70
95.00
NEW ELECTRICAL SLEEVES
ATP7
NEW SLIP LANE
Ex. WM Ø150mm
95.25
RP25
NEW ELECTRICAL SLEEVES
STRAND ROAD
Ex. STW Ø425mm
95.50
Ex. BOX CULVERT (1.02W x 0.79H)
95.50
95.50
NEW TELECOMMUNICATION AND ELECTRICAL SLEEVES
95.50
Ex. STW Ø300mm
Ex. WM Ø200mm
95.50
Ex. FS Ø160mm
NEW ACCESS ROAD
94.50
94.50
94.50
NEW ELECTRICAL SLEEVES
HEROLD STREET
EXISTING STORMWATER CHANNEL TO BE FORMALIZED VIA UNDERGROUND PIPE SYSTEM
EXISTING BUILDING TO BE DEMOLISHED AND REBUILD
95.75
EDGE OF PROPOSED SIDEWALK
95.50
Ex. STW Ø900mm
95.75
95.75
RIGHT OF WAY SERVITUDE
FURROW SERVITUDE
NEW EMBAYMENT FOR ACCESS TO EXISTING PROPERTIES
STASIE STREET
95.50
95.50
95.50
NEW TELECOMMUNICATION AND ELECTRICAL SLEEVES
Ex. FS Ø160mm
95.50
95.50
LIMIT OF CONSTRUCTION
EXISTING PRASA RAILWAY LINES
Ex. ELECT. HV CABLE
STELLENBOSCH STATION
EXISTING PEDESTRIAN SIDEWALK TO REMAIN AS IS
96.00
96.00
REVISED MEDIAN
Ex. 66kV A CABLE
Ex. FS Ø160mm
NEW ACCESS ROAD
RP26
NEW ELECTRICAL SLEEVES
96.25
Ex. STW Ø300mm
NEW TELECOMMUNICATION AND ELECTRICAL SLEEVES
EXISTING INTERSECTION TO BE CLOSED OFF
96.00
Ex. 66kV OIL FILLED CABLE
NEW ELECTRICAL SLEEVES
PROPOSED POSITION AND LAYOUT OF NEW ELECTRICAL SUB-STATION
NEW Ø160mm FS CONNECTION
NEW Ø225mm W CONNECTION
96.00
ADAM TAS ROAD
95.75
LIMIT OF CONSTRUCTION
Ex. FS Ø160mm
96.00
NEW ELECTRICAL SLEEVES
95.75
Ex. STW Ø900mm
95.75
95.75
NEW TELECOMMUNICATION AND ELECTRICAL SLEEVES
Ex. FS Ø160mm
95.75
95.75
NEW CARRIAGEWAY CROSSING FOR ACCESS TO NEW ELECTRICAL SUB-STATION
DU TOIT STREET
NEW ELECTRICAL SLEEVES
LD1
LIMIT OF CONSTRUCTION

NOTES / LEGEND

- EXISTING STORMWATER PIPE
- EXISTING SEWER PIPE
- EXISTING WATER PIPE
- EXISTING TELECOMMUNICATION
- EXISTING POWER CABLE
- EXISTING ROBOT
- EXISTING STREET LIGHT
- BENCHMARK
- NEW STORMWATER PIPE
- NEW FOUL SEWER PIPE
- NEW WATER PIPE
- NEW FIRE WATER PIPE
- NEW IRRIGATION PIPE
- NEW SUBSOIL DRAINAGE PIPE
- NEW TELECOMMUNICATION SLEEVE
- NEW ELECTRICAL SLEEVE
- NEW STORMWATER MANHOLE
- NEW FOUL SEWER MANHOLE
- NEW TELECOMMUNICATION MANHOLE
- NEW ELECTRICAL MANHOLE
- NEW STORMWATER CATCHPIT
- FIRE HYDRANT
- BULK WATER METER
- BULK IRRIGATION METER
- WATER VALVE
- IRRIGATION VALVE
- NEW TREES

NOTE:
- ALL SERVICES ARE INDICATIVE ONLY AND SHOULD BE VERIFIED ON SITE BY THE CONTRACTOR
- CONTOURS REPRESENT NATURAL GROUND LEVELS

APPROVED BY COUNCIL / CLIENT

CITY ENGINEER / CLIENT | REG. NO. | DATE

AMENDMENTS CODE

A,B,C... / : BEFORE TENDER
TI : TENDER DRAWING
E1,E2,E... / : AFTER TENDER
Z : AS BUILT
A: BY CLIENT
B: BY ARCHITECT
C: BY MECHANICAL OR ELECTRICAL
D: BY EM
E: BY OTHER ( )

DATE	INITIAL	No./CODE	REVISION DESCRIPTION
20/07/2024	FMG	T0/D	ISSUED FOR TENDER

CLIENT

STELLENBOSCH MUNICIPALITY • UMASIPALA • MUNISPALITEIT

bvi 50 YEAR CELEBRATION EST 1967-2017
• ENGINEERING • PROCUREMENT • MANAGEMENT

CESA

PROVINCE	OFFICE	TEL	E-MAIL
Gauteng	Pretoria	(012) 940-1111	pta@vvi.co.za
	Polokwane	(015) 291-0400	ply@vvi.co.za
Free State	Bloemfontein	(051) 447-2727	bfn@vvi.co.za
Northern Cape	Welkom	(057) 352-0456	wkp@vvi.co.za
	Upington	(054) 337-8850	upt@vvi.co.za
KwaZulu-Natal	Springbok	(027) 712-8014	spk@vvi.co.za
	Durban	(031) 266-8282	dbn@vvi.co.za
Eastern Cape	Empangeni	(035) 772-6172	emp@vvi.co.za
	Port Elizabeth	(041) 372-4400	hms@vvi.co.za
	East London	(043) 726-5885	bfn@vvi.co.za
Western Cape	Cape Town	(021) 527-7000	cpt@vvi.co.za

Visit or contact us online at www.bvigroup.co.za

Registration No. 1998/003151/07

PROJECT

REALIGNMENT OF THE R44/R310 AND ALEXANDER STREET JUNCTION

DRAWING TITLE

GENERAL SERVICES LAYOUT - PHASE 1

APPROVED BY BVI

ENGINEER/TECHNOLOGIST | REG. NO. | DATE

SCALE	1:300 @ A0	DRAWN	JAS
DESIGNED	FMG	CHECKED	LP
PLAN NUMBER		REVISION NO.	DATE SAVED
34092.00-101-01		T0	17 July 2024

O:\PROJECTS DRAWINGS\34000 - 34999\34092.00\CIVIL\TENDER DRAWING\34092.00-101-01 REVT0_(SERVICES LAYOUT).DWG

34092.00-101-01 REVT0_(SERVICES LAYOUT).DWG

0 10 50 100

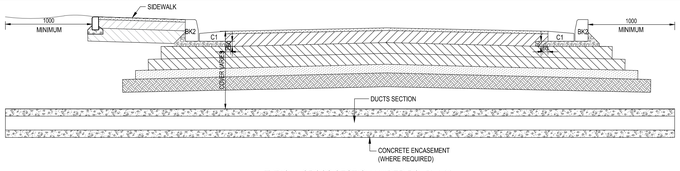

TYPICAL CROSS SECTION UNDER ROADWAY

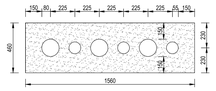

INSTALLATION OF ELECTRICAL DUCT BANK: TYPE E
(3 x 110 ; 3 x 160)
SCALE 1 : 20

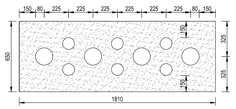

INSTALLATION OF ELECTRICAL DUCT BANK: TYPE G
(6 x 110 ; 4 x 160)
SCALE 1 : 20

NOTES:
- MINIMUM COVER OF DUCTS BELOW FINISHED ROAD LEVEL TO BE 1.2m.
- REFER TO TABLE FOR DUCT PIPE MATERIALS AND SIZES.
- DUCTS SHALL EXTEND PAST THE ROAD AS PER DETAIL SHOWN.
- A 2.5mmØ GALVANISED DRAW WIRE WITH A 2m FREE LENGTH AT EACH END SHALL BE LEFT IN EACH DUCT.
- DUCTS SHALL BE SEALED AFTER INSTALLATION WITH END CAPS TO PREVENT THE INGRESS OF MOISTURE AND OBSTRUCTIONS.
- THE POSITION OF THE INSTALLED DUCTS TO BE PERMANENTLY MARKED ON THE KERB FACE AS PER COCT STANDARDS WITHIN BERKSHIRE AND BIG BAY BOULEVARD OR AS DIRECTED BY THE ENGINEER. THE POSITION OF THE INSTALLED DUCTS WITHIN THE R27 ROAD RESERVE TO BE PERMANENTLY MARKED AS PER THE DUCT BLOCK MARKER DETAIL.
- ELECTRICAL DUCTS TO HAVE DANGER TAPE INSTALLED AS PER THE STANDARDS

ELECTRICAL	LOW VOLTAGE	110mm	uPVC CLASS 400 KPa COMPLYING WITH WITH SANS 1601
	MEDIUM VOLTAGE	160mm	USING SPIGOT AND SOCKET RUBBER RING JOINTS.
IRRIGATION		110mm	uPVC CLASS 34 HEAVY DUTY COMPLYING WITH SANS 791 USING SPIGOT AND SOCKET RUBBER RING JOINTS.
TELECOMMUNICATION		110mm	HDPE DOUBLE-WALL CORRUGATED PIPE, COMPRESSION RESISTANCE OF TYPE 450N, COMPLYING WITH SANS 61386-24 AND USING SEALING RINGS.
TRAFFIC SIGNALS		110mm	HDPE DOUBLE-WALL CORRUGATED PIPE, COMPRESSION RESISTANCE OF TYPE 450N, COMPLYING WITH SANS 61386-24 AND USING SEALING RINGS.

TYPICAL DUCT INSTALLATION DETAILS
SCALE 1:25

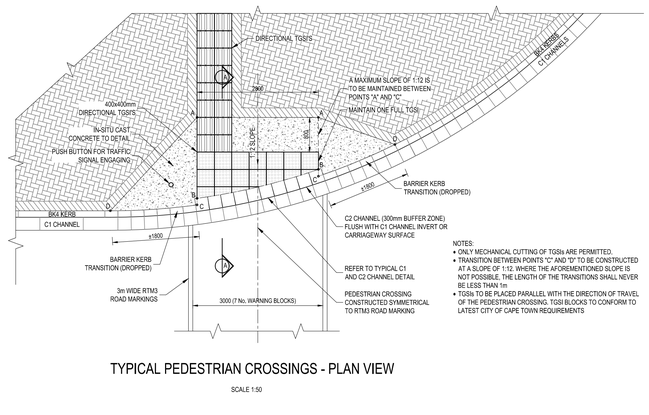

NOTES:
- ONLY MECHANICAL CUTTING OF TGSIs ARE PERMITTED.
- TRANSITION BETWEEN POINTS "C" AND "D" TO BE CONSTRUCTED AT A SLOPE OF 1:12. WHERE THE AFOREMENTIONED SLOPE IS NOT POSSIBLE, THE LENGTH OF THE TRANSITIONS SHALL NEVER BE LESS THAN 1m
- TGSIs TO BE PLACED PARALLEL WITH THE DIRECTION OF TRAVEL OF THE PEDESTRIAN CROSSING. TGSI BLOCKS TO CONFORM TO LATEST CITY OF CAPE TOWN REQUIREMENTS

TYPICAL PEDESTRIAN CROSSINGS - PLAN VIEW
SCALE 1:50

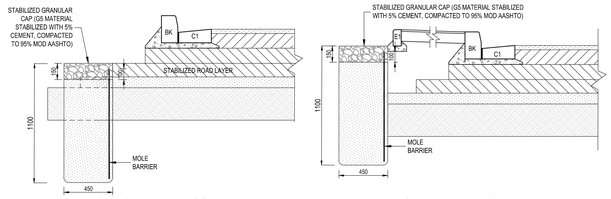

TYPICAL MOLE BARRIER (NO SIDEWALK)

TYPICAL MOLE BARRIER (WITH SIDEWALK)

NOTES:
- MOLE BARRIER SHEETS TO BE HDPE SHEETING, 2mm THICK, 1m IN HEIGHT (MINIMUM).
- SHEET ENDS TO OVERLAP BY 200mm MINIMUM AND SECURED WITH A 50mm x 8mm GALVANIZED COVER STRIP ON EITHER SIDE, JOINED WITH GALVANIZED SCREWS OR SIMILAR APPROVED JOINTING METHODS
- AT SERVICE CROSSINGS, SHEETS TO BE CUT TO ACCOMMODATE THE CROSSING SERVICES AS PER SERVICES JOINTING DETAIL
- AT SHEETING JOINTS CUSTOM CUT STRIPS SHALL BE USED TO JOIN SHEETS (200mm MINIMUM OVERLAP). COVER STRIPS TO BE PROVIDED ON EITHER SIDE, JOINED WITH SCREWS OR SIMILAR APPROVED JOINTING METHODS
- WHEN THE SOFFIT OF THE SERVICE IS LESS THAN 1m DEEP, GAPS LARGER THAN 25mm DIAMETER TO BE PATCHED AND MORTARED OVER
- TRENCH WIDTH SHALL BE MINIMUM 450mm WIDE
- EXCAVATION TO BE BACKFILLED WITH SUITABLE GRANULAR MATERIAL, COMPACTED IN 150mm LAYER TO 93% MOD AASHTO (100% FOR SAND)
- A 150mm THICK STABILIZED GRANULAR CAP SHALL BE PROVIDED AT THE UPPER PORTION OF THE TRENCH, COVERING AT LEAST THE UPPER 100mm OF THE MOLE BARRIER SHEETING.

TYPICAL MOLE BARRIER DETAILS
SCALE 1:20

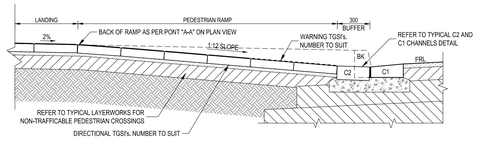

PEDESTRIAN CROSSING RAMP: SECTION A-A
SCALE 1:20

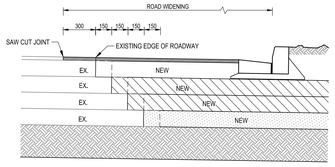

ROAD LAYERWORKS TIE-IN DETAIL
SCALE 1:20

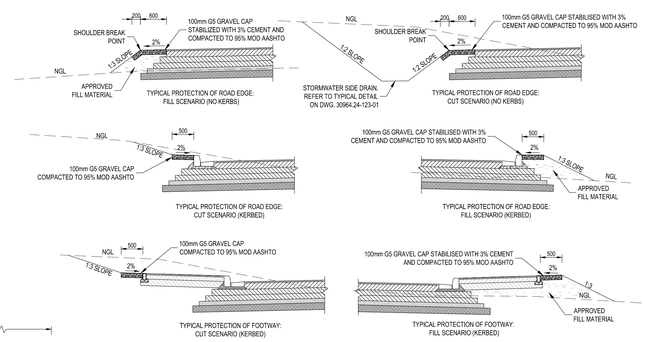

TYPICAL ROAD EDGE PROTECTION DETAILS
SCALE 1:50

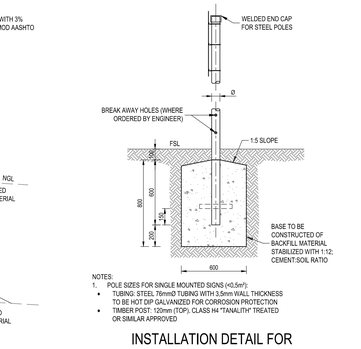

NOTES:
1. POLE SIZES FOR SINGLE MOUNTED SIGNS (<0.5m²):
   - TUBING: STEEL 76mmØ TUBING WITH 3.5mm WALL THICKNESS TO BE HOT DIP GALVANIZED FOR CORROSION PROTECTION
   - TIMBER POST: 120mm (TOP), CLASS H4 "TANALITH" TREATED OR SIMILAR APPROVED

INSTALLATION DETAIL FOR GROUND MOUNTED SIGNS
SCALE 1:20

SHEETING JOINTING DETAIL

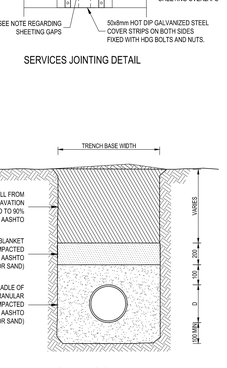

SERVICES JOINTING DETAIL

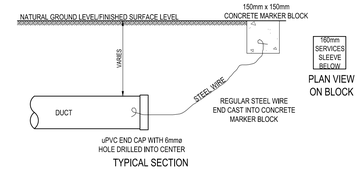

TYPICAL SECTION

DUCT BLOCK MARKER DETAIL
SCALE 1 : 10

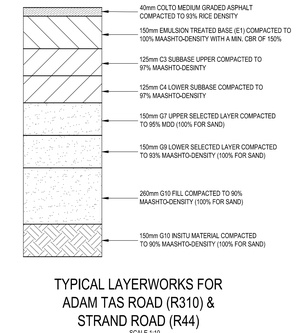

TYPICAL LAYERWORKS FOR ADAM TAS ROAD (R310) & STRAND ROAD (R44)
SCALE 1:10

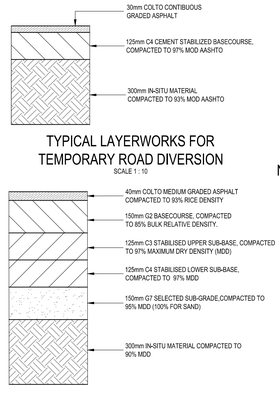

TYPICAL LAYERWORKS FOR TEMPORARY ROAD DIVERSION
SCALE 1 : 10

TYPICAL LAYERWORKS FOR ALEXANDER STREET

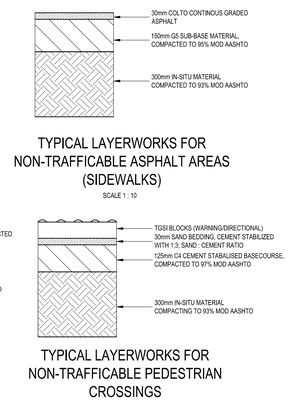

TYPICAL LAYERWORKS FOR NON-TRAFFICABLE ASPHALT AREAS (SIDEWALKS)
SCALE 1 : 10

TYPICAL LAYERWORKS FOR NON-TRAFFICABLE PEDESTRIAN CROSSINGS
SCALE 1 : 10

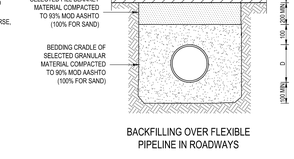

BACKFILLING OVER FLEXIBLE PIPELINE IN ROADWAYS

BACKFILLING OVER FLEXIBLE PIPELINE IN NON-TRAFFICABLE AREAS

FLEXIBLE PIPELINE BACKFILL DETAILS
SCALE 1:20

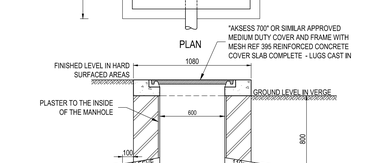

SECTION A - A

SERVICE DUCT DRAW BOX DETAIL
SCALE 1:20

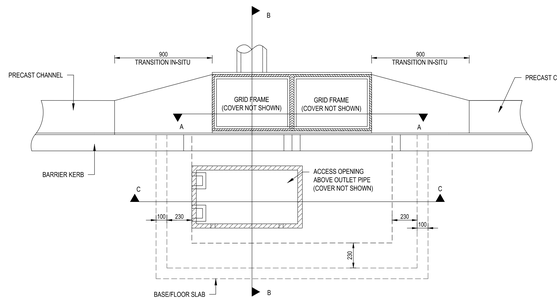

DOUBLE GRID CATCHPIT FOR BK2/C1 CHANNEL
PLAN VIEW
SCALE 1:20

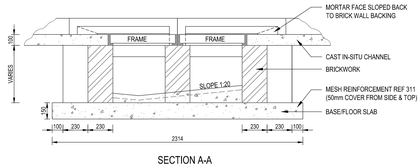

SECTION A-A
SCALE 1:20

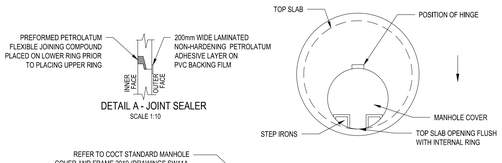

DETAIL A - JOINT SEALER
SCALE 1:10

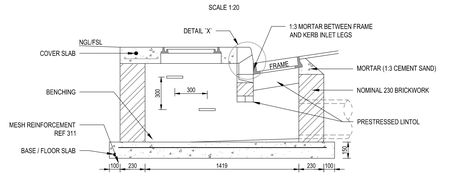

SECTION B-B
SCALE 1:20

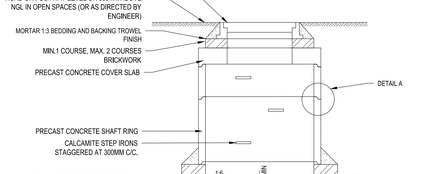

STORMWATER MANHOLE
(PRECAST CONCRETE RING TYPE)
SCALE 1:20

NOTE:
1. REFER TO SABS 1200 LE FOR SPECIFICATIONS AND ITEMS NOT INDICATED
2. MIN. C/L RADIUS OF BENCHING 2.5 X PIPE DIAMETER
3. CHIMNEY OPENING TO BE PLACED AS CLOSE TO CENTRE LINE OF THE MAIN INCOMING AND OUTGOING PIPE AS POSSIBLE
4. BRICKWORK- SEE SPECIFICATIONS FOR MASONRY UNITS. MIN. STANDARD DOCUMENT P.10.4.10
5. MORTAR FOR BRICKWORK TO BE 1:3

MANHOLE DIAMETER TABLE	
PIPE DIAMETER	CHAMBER DIAMETER
375	1000
450	1000
525	1250
600	1250

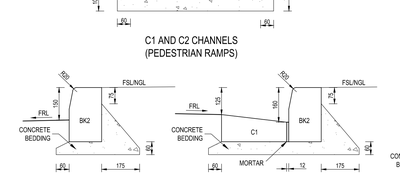

C1 AND C2 CHANNELS
(PEDESTRIAN RAMPS)

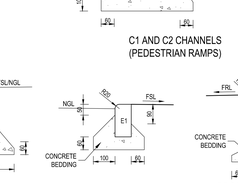

C1 AND C2 CHANNELS
(PEDESTRIAN RAMPS)

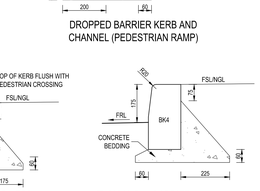

DROPPED BARRIER KERB AND CHANNEL (PEDESTRIAN RAMP)

TYPICAL BK2 BARRIER KERB

TYPICAL BK2 BARRIER KERB AND C1 CHANNEL

TYPICAL E1 EDGING

DROPPED BARRIER KERB (PEDESTRIAN RAMP)

TYPICAL BK4 BARRIER KERB AND C1 CHANNEL

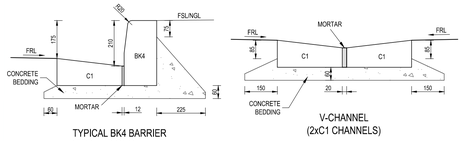

TYPICAL BK4 BARRIER KERB AND C1 CHANNEL

V-CHANNEL (2xC1 CHANNELS)

DROPPED BARRIER KERB AND CHANNEL (OVERLAND STORMWATER)

KERB AND CHANNEL INSTALLATION NOTES:
- ALL UNITS TO BE LAID ON 20 MPa CONCRETE BEDDING ON SUBBASE/SUBBASE COMPACTED AS SPECIFIED
- ALL KERBS/CHANNELS TO RADII LESS THAN 20m TO BE BUILT WITH 300/330mm LONG SECTIONS
- ALL UNITS LAID LONGITUDINALLY NEXT TO ANOTHER MUST BE STAGGERED
- ALL KERB JOINTS TO BE WATER SPRAYED BEFORE MORTAR FILL BE TO CONSTRUCTED
- MORTAR TO HAVE A CEMENT:SAND RATIO OF 1:3
- EXPANSION JOINTS SHALL BE 12mm, SPACED AT 10m C/C FILLED WITH FOAMED POLYSTYRENE.
- FRL = FINISHED ROAD LEVEL
- FSL - FINISHED HARD SURFACE LEVEL
- NGL= NATURAL/NEW GROUND SURFACE LEVEL
- BK - BARRIER KERB

TYPICAL KERB AND CHANNEL INSTALLATION DETAILS
SCALE 1:10

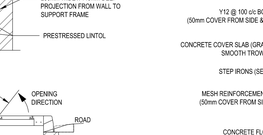

DETAIL 'X'
SCALE 1:15

NOTE: CONCRETE GRADES	
BASE/FLOOR	25/19
BENCHING	20/13
IN-SITU CAST CHANNEL	30/19

GENERAL NOTES:
1. HINGED COVER TO OPEN AWAY FROM ROADWAY. SEE DETAIL 1.
2. CATCHPIT DEPTH (RELATIVE TO ROAD EDGE LEVEL)
   MINIMUM = 0.75m
   MAXIMUM = 1.20m
3. BRICKWORK SEE SECTION 10.4.10 `SPECIFICATION FOR MASONRY UNITS`.
4. ALL INTERNAL BRICKWORK TO HAVE SMOOTH FINISH.
5. REFER TO DRAWING SW4 FOR INLET KERB DETAILS.

DETAIL 1: COVER OPENING DIRECTION
SCALE 1:20

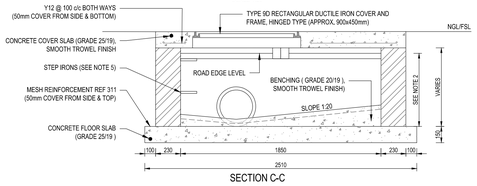

SECTION C-C
SCALE 1:20

NOTES / LEGEND

LEGEND:
NGL : NATURAL GROUND LEVEL
FRL : FINISHED ROAD LEVEL
FSL : FINISHED SURFACE LEVEL

NOTE:
- TO BE READ IN CONJUNCTION WITH 100 AND 113 SERIES DRAWING

APPROVED BY COUNCIL / CLIENT

CITY ENGINEER / CLIENT | REG. NO. | DATE

AMENDMENTS CODE

A.B.C... / BEFORE TENDER
T1 / TENDER DRAWING
C1,C2,... / AFTER TENDER
Z / AS BUILT

A: BY CLIENT
B: BY ARCHITECT
C: BY MECHANICAL OR ELECTRICAL
D: BY SV
E: BY OTHER ( )

DATE	INITIAL	No./CODE	REVISION DESCRIPTION
20/07/2024	FMG	T0/D	ISSUED FOR TENDER

CLIENT

STELLENBOSCH
MUNICIPALITY • UMASIPALA • MUNISIPALITEIT

• ENGINEERING • PROCUREMENT • MANAGEMENT

PROVINCE | OFFICE | TEL | E-MAIL
Gauteng | Pretoria | (012) 940-1111 | pta@vbi.co.za
| Pakkiaria | (015) 291-0400 | pk@vbi.co.za
Free State | Bloemfontein | (051) 447-2121 | bfn@vbi.co.za
| Welkom | (057) 353-4368 | wel@vbi.co.za
Northern Cape | Upington | (054) 337-8800 | upt@vbi.co.za
| Springbok | (027) 712-8014 | spb@vbi.co.za
KwaZulu Natal | Durban | (031) 266-8352 | dbn@vbi.co.za
| Empangeni | (035) 772-4112 | emp@vbi.co.za
Eastern Cape | Port Elizabeth | (041) 373-4043 | bse@vbi.co.za
| East London | (043) 703-0800 | bl@vbi.co.za
Western Cape | Cape Town | (021) 527-7000 | cpt@vbi.co.za
Visit or contact an online at www.bvigroup.co.za

PROJECT

REALIGNMENT OF THE R44/R310 AND ALEXANDER STREET INTERSECTION

DRAWING TITLE

STANDARD DETAILS

APPROVED BY BVI

ENGINEER/TECHNOLOGIST | REG. NO. | DATE

SCALE	AS SHOWN	DRAWN	NF
DESIGNED	FMG	CHECKED	LP
PLAN NUMBER		REVISION NO.	DATE SAVED
34092.00-104-01		T0	11 July 2024

34092.00-104-01-REVT0_(STANDARD DETAILS LAYOUT).DWG

0 10 50 100

Thursday, 12 February 2026 14:46:40

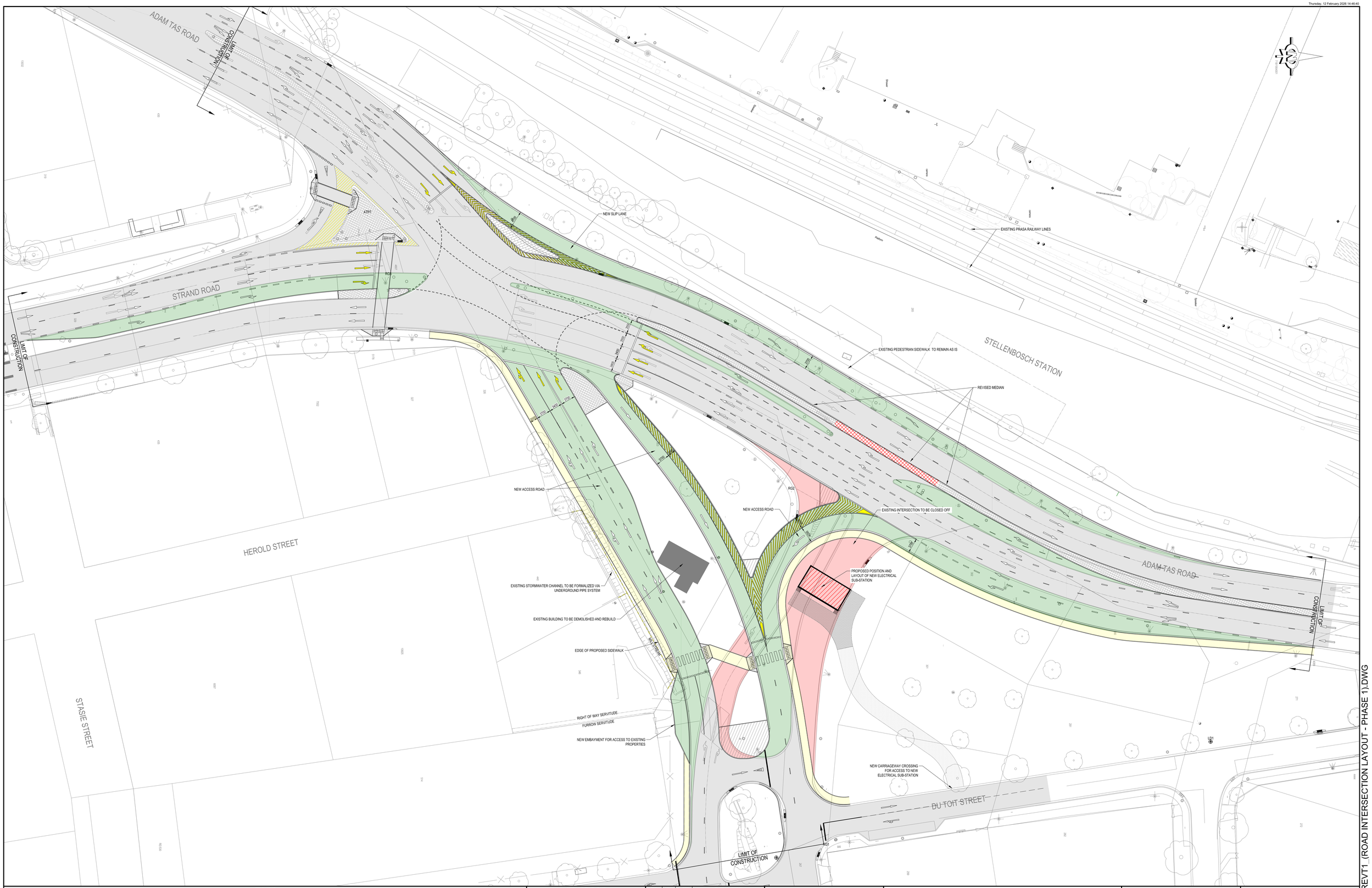

NOTES / LEGEND

- EX. ROADWAY / EX. ROAD MARKINGS
- NEW PROPOSED ROAD MARKINGS
- NEW PROPOSED ROADWAY
- EX. RAILWAY RESERVE BOUNDARY FENCE
- NEW PROPOSED MSE (MECHANICALLY STABILIZED EARTH) WALL
- NEW PROPOSED BRIDGE STRUCTURE LIMITS
- NEW TRAFFIC ISLAND / LANDSCAPING
- NEW PROPOSED MEDIAN CLOSURES (INTERSECTION CHANGE TO LEFT-IN & LEFT-OUT OPERATION)
- NEW PROPOSED SUSPENDED BRIDGE (BRIDGE-OVER-ROAD & BRIDGE-OVER-RAIL)
- EXISTING ROAD SECTIONS TO BE REMOVED.
- EXISTING ROADWAY TO REMAIN IN PLACE.
- NEW ROAD SECTIONS TO BE ADDED TO EXISTING ROADWAY.
- NEW SIDEWALK SECTIONS TO BE ADDED TO EXISTING SIDEWALKS.

0 10 50 100

APPROVED BY COUNCIL / CLIENT

CITY ENGINEER / CLIENT	REG. NO.	DATE

AMENDMENTS CODE

A.B.C. / : BEFORE TENDER
TD / : TENDER DRAWING
E.1,2,3,4 / : AFTER TENDER
Z / : AS BUILT

A: BY CLIENT
B: BY ARCHITECT
C: BY MECHANICAL OR ELECTRICAL
D: BY EIA
E: BY OTHER ( )

DATE	INITIAL	No./CODE	REVISION DESCRIPTION
20/07/2024	FMG	T0/D	ISSUED FOR TENDER
12/02/2026	FMG	T1/D	ISSUED FOR TENDER

CLIENT

STELLENBOSCH
STELLENBOSCH • SPAZA • PRASA • SANSA
MUNICIPALITY • UMASIPALA • MUNISIPALITEIT

ISO 9001 REGISTERED
CESA
Vbvi 50 YEAR CELEBRATION EST 1967-2017
• ENGINEERING • PROCUREMENT • MANAGEMENT

PROVINCE	OFFICE		E-MAIL
Gauteng	Pretoria	(012) 940-1111	pta@vbvi.co.za
	Pokwane	(012) 261-0400	jo@vbvi.co.za
Free State	Bloemfontein	(051) 447-2127	bfn@vbvi.co.za
	Welkom	(057) 353-0400	wel@vbvi.co.za
Northern Cape	Upington	(054) 337-6800	up@vbvi.co.za
	Springbok	(027) 712-3814	sp@vbvi.co.za
KwaZulu Natal	Durban	(031) 266-6302	dbn@vbvi.co.za
	Empangeni	(035) 772-4112	emp@vbvi.co.za
Eastern Cape	Port Elizabeth	(041) 373-4400	bwa@vbvi.co.za
	East London	(043) 735-3000	ibo@vbvi.co.za
Western Cape	Cape Town	(021) 527-7000	ctp@vbvi.co.za

Visit or contact us online at www.bvigroup.co.za

Registration no. 1998/003127/07

PROJECT

REALIGNMENT OF THE R44/R310 AND ALEXANDER STREET JUNCTION

DRAWING TITLE

ROAD INTERSECTION LAYOUT - PHASE 1

APPROVED BY BVI

ENGINEER/TECHNOLOGIST	REG. NO.	DATE

SCALE	1:300 @ A0	DRAWN	JAS
DESIGNED	FMG	CHECKED	LP

PLAN NUMBER	REVISION NO.	DATE SAVED
34092.00-110-02	T1	12 February 2026

O:\PROJECTS DRAWINGS\34000 - 34999\34092.00\CIVIL\TENDER DRAWINGS\REVT1\34092.00-110-02-REVT1_(ROAD INTERSECTION LAYOUT - PHASE 1).DWG

34092.00-110-02-REVT1_(ROAD INTERSECTION LAYOUT - PHASE 1).DWG

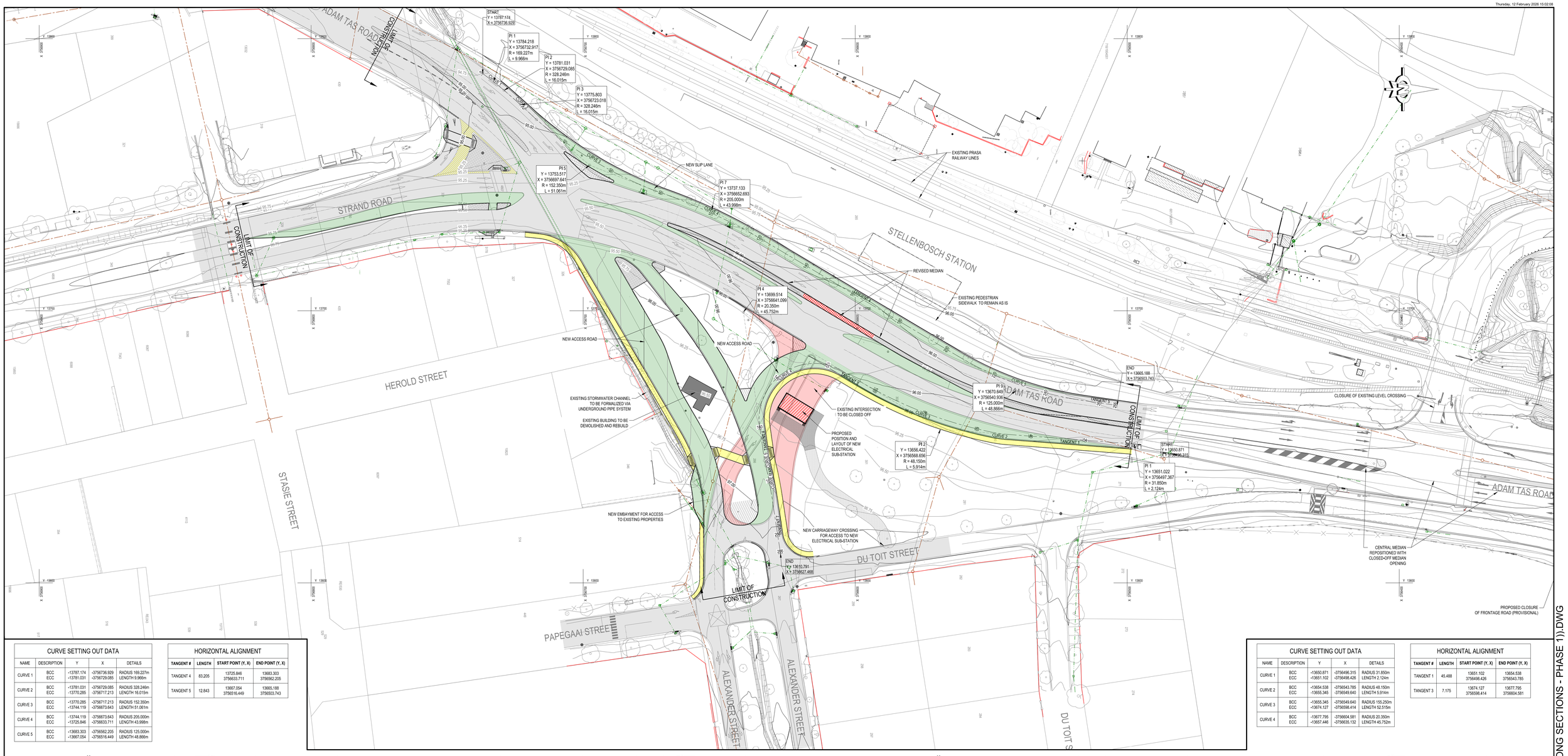

CURVE SETTING OUT DATA

NAME	DESCRIPTION	Y	X	DETAILS
CURVE 1	BCC ECC	-13787.174 -13781.031	-3756736.929 -3756729.085	RADIUS 169.227m LENGTH 9.966m
CURVE 2	BCC ECC	-13781.031 -13770.285	-3756729.085 -3756717.213	RADIUS 328.246m LENGTH 16.015m
CURVE 3	BCC ECC	-13770.285 -13744.119	-3756717.213 -3756673.643	RADIUS 152.350m LENGTH 51.061m
CURVE 4	BCC ECC	-13744.119 -13725.846	-3756673.643 -3756633.711	RADIUS 205.000m LENGTH 43.998m
CURVE 5	BCC ECC	-13683.303 -13667.054	-3756562.205 -3756516.449	RADIUS 125.000m LENGTH 48.866m

HORIZONTAL ALIGNMENT

TANGENT #	LENGTH	START POINT (Y, X)	END POINT (Y, X)
TANGENT 4	83.205	13725.846 3756633.711	13683.303 3756562.205
TANGENT 5	12.843	13667.054 3756516.449	13665.188 3756503.743

CURVE SETTING OUT DATA

NAME	DESCRIPTION	Y	X	DETAILS
CURVE 1	BCC ECC	+13650.871 +13651.102	-3756496.315 -3756498.428	RADIUS 31.850m LENGTH 2.124m
CURVE 2	BCC ECC	+13654.538 +13655.345	-3756543.785 -3756549.640	RADIUS 48.150m LENGTH 5.914m
CURVE 3	BCC ECC	+13655.345 +13674.127	-3756549.640 -3756598.414	RADIUS 155.250m LENGTH 52.515m
CURVE 4	BCC ECC	+13677.795 +13657.446	-3756604.581 -3756635.132	RADIUS 20.350m LENGTH 45.752m

HORIZONTAL ALIGNMENT

TANGENT #	LENGTH	START POINT (Y, X)	END POINT (Y, X)
TANGENT 1	45.488	13651.102 3756498.426	13654.538 3756543.785
TANGENT 3	7.175	13674.127 3756598.414	13677.795 3756604.581

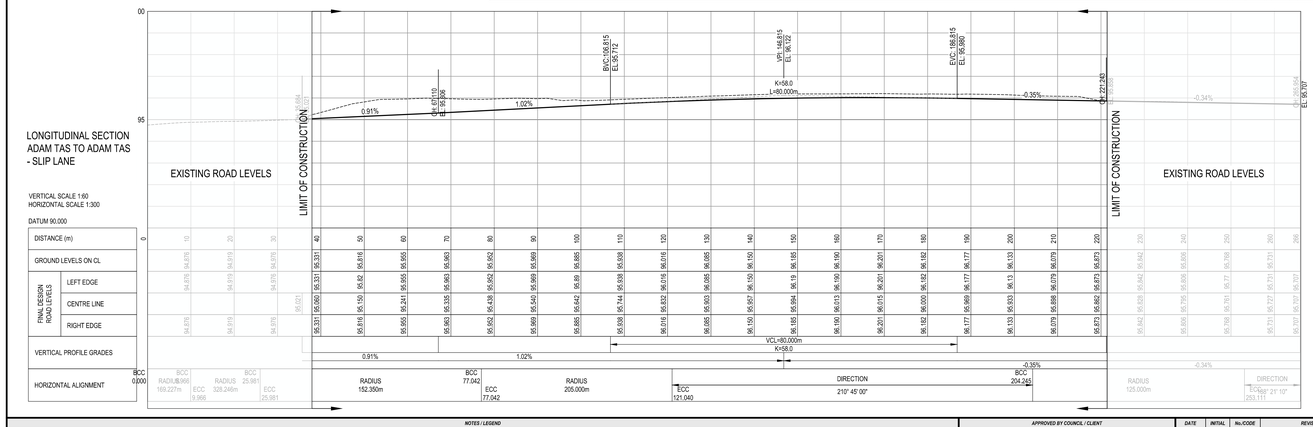

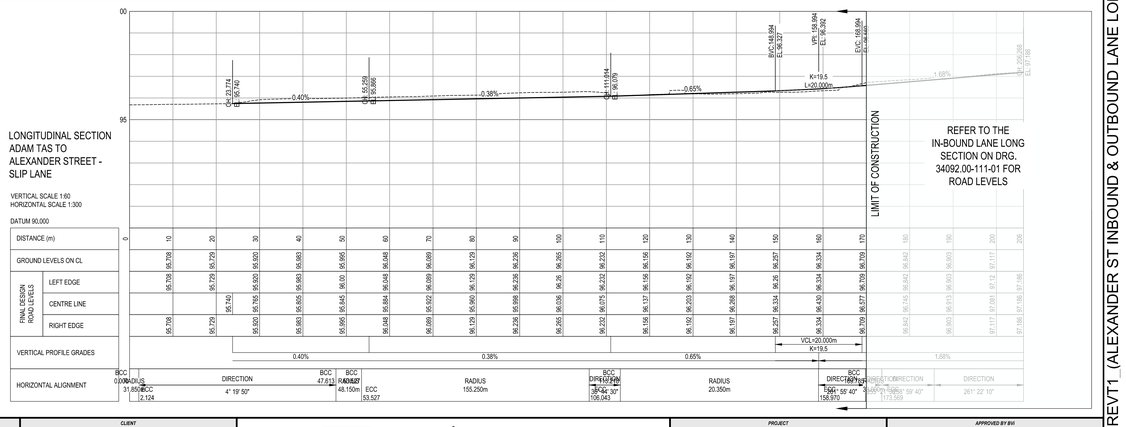

NOTES / LEGEND

- NEW TRAFFIC ISLAND / LANDSCAPING
- NEW PROPOSED MEDIAN CLOSURES (INTERSECTION CHANGE TO LEFT-IN & LEFT-OUT OPERATION)
- NEW PROPOSED SUSPENDED BRIDGE (BRIDGE-OVER-ROAD & BRIDGE-OVER-RAIL)
- EXISTING ROAD SECTIONS TO BE REMOVED.
- EXISTING ROADWAY TO REMAIN IN PLACE.
- NEW ROAD SECTIONS TO BE ADDED TO EXISTING ROADWAY.
- NEW SIDEWALK SECTIONS TO BE ADDED TO EXISTING SIDEWALKS.
- EX. ROADWAY / EX. ROAD MARKINGS
- NEW PROPOSED ROAD MARKINGS
- EXISTING BUILDING LINES

NOTE:
- CONTOURS REPRESENT DESIGN LEVELS
- THE LONG SECTIONS DISPLAYED ON THIS DRAWING ARE ONLY FOR ILLUSTRATION PURPOSES ONLY. REFER TO THE SETTING-OUT DRAWING ON DWG 34092.00-11S-01 FOR SETTING-OUT INFORMATION.

APPROVED BY COUNCIL / CLIENT

CITY ENGINEER / CLIENT — REG. NO. — DATE

AMENDMENTS CODE

A.B.C... = BEFORE TENDER
T0 = TENDER DRAWING
E.1.2.3... = AFTER TENDER
Z = AS BUILT

A: BY CLIENT
B: BY ARCHITECT
C: BY MECHANICAL OR ELECTRICAL
D: BY EIA
E: BY OTHER( )

DATE	INITIAL	No./CODE	REVISION DESCRIPTION
20/07/2024	FMG	T0D	ISSUE FOR TENDER
12/02/2026	FMG	T1D	ISSUED FOR TENDER

CLIENT

STELLENBOSCH
MUNICIPALITY • UMASIPALA • MUNISIPALITEIT

ISO 9001:2015 BUREAU VERITAS CERTIFIED
CESA
VERA CELEBRATION EST 1967-2017
• ENGINEERING • PROCUREMENT • MANAGEMENT

PROVINCE	OFFICE	☎	E-MAIL
Gauteng	Pretoria	(012) 940-1111	pta@vgrp.co.za
	Polokwane	(015) 291-0400	plk@vbi.co.za
Free State	Bloemfontein	(051) 447-2121	bfn@vbi.co.za
	Welkom	(057) 352-0456	wel@vbi.co.za
Northern Cape	Upington	(054) 331-6600	upt@vbi.co.za
	Springbok	(027) 712-8114	spb@vbi.co.za
KwaZulu-Natal	Durban	(031) 566-8362	dbn@vbi.co.za
	Empangeni	(035) 772-6112	emp@vbi.co.za
Eastern Cape	Port Elizabeth	(041) 373-4000	hms@vbi.co.za
	East London	(043) 726-3680	bla@vbi.co.za
Western Cape	Cape Town	(021) 527-1000	cpt@vbi.co.za

Registration no. 1998/003172/07
Visit or contact an office at www.bvigroup.co.za

PROJECT

REALIGNMENT OF THE R44/R310 AND ALEXANDER STREET JUNCTION

DRAWING TITLE

ADAM TAS SLIP LANE
LONG SECTIONS - PHASE 1

APPROVED BY BVI

ENGINEER/TECHNOLOGIST — REG. NO. — DATE

SCALE	1:500 @ A0	DRAWN	JAS
DESIGNED	FMG	CHECKED	LP

PLAN NUMBER	REVISION NO.	DATE SAVED
34092.00-111-02	T1	12 February 2026

34092.00-111-01 REVT1_(ALEXANDER ST INBOUND & OUTBOUND LANE LONG SECTIONS - PHASE 1)).DWG

O:\PROJECTS DRAWINGS\34000 - 34999\34092.00\CIVIL\TENDER DRAWINGS\REVT1\34092.00-111-01 REVT1_(ALEXANDER ST INBOUND & OUTBOUND LANE LONG SECTIONS - PHASE 1)).DWG

0 10 50 100

Thursday, 12 February 2026 15:38:27

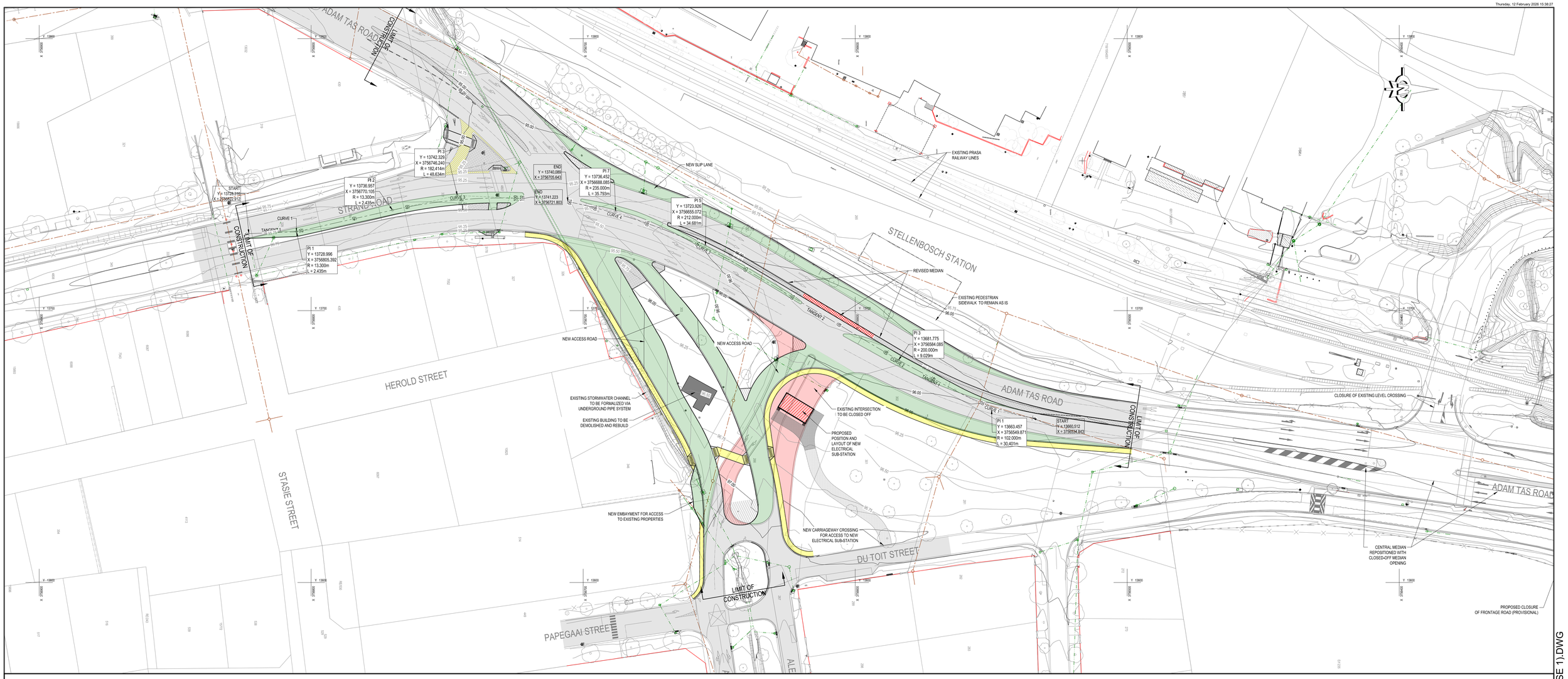

LONGITUDINAL SECTION
STRAND ROAD TO ALEXANDER STREET - TURNING LANE

VERTICAL SCALE 1:60
HORIZONTAL SCALE 1:300

DATUM 90,000

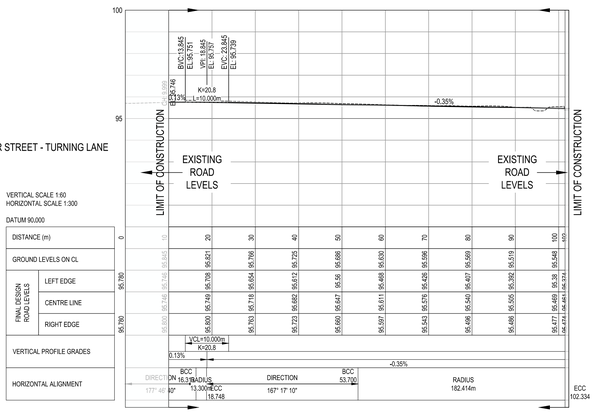

CURVE SETTING OUT DATA				
NAME	DESCRIPTION	Y	X	DETAILS
CURVE 1	BCC ECC	-13660.512 -13670.686	-3756534.843 -3756563.372	RADIUS 102.000m LENGTH 30.401m
CURVE 2	BCC ECC	-13679.644 -13684.084	-3756580.104 -3756587.965	RADIUS 200.000m LENGTH 9.029m
CURVE 3	BCC ECC	-13715.102 -13730.194	-3756640.099 -3756671.281	RADIUS 212.000m LENGTH 34.681m
CURVE 4	BCC ECC	-13730.194 -13740.089	-3756671.281 -3756705.643	RADIUS 235.000m LENGTH 35.793m

HORIZONTAL ALIGNMENT			
TANGENT #	LENGTH	START POINT (Y, X)	END POINT (Y, X)
TANGENT 1	18.979	13670.686 3756563.372	13679.644 3756580.104
TANGENT 2	60.663	13684.084 3756587.965	13715.102 3756640.099

LONGITUDINAL SECTION
ADAM TAS TO ADAM TAS - TURNING LANE

VERTICAL SCALE 1:60
HORIZONTAL SCALE 1:300

DATUM 90,000

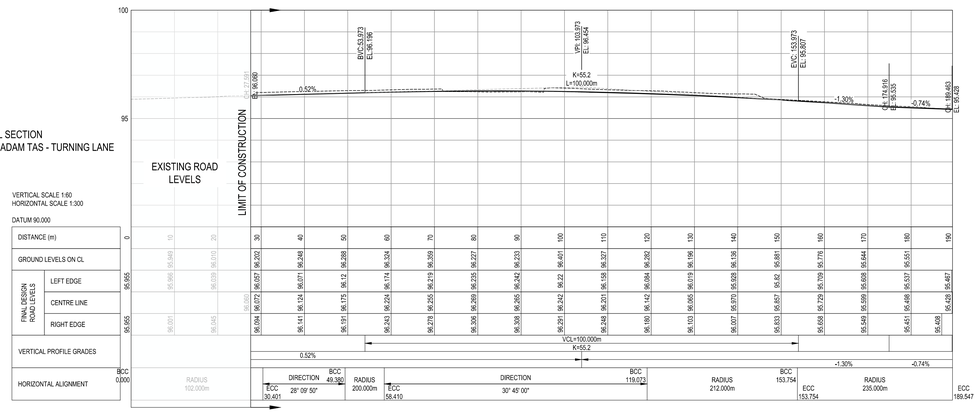

CURVE SETTING OUT DATA				
NAME	DESCRIPTION	Y	X	DETAILS
CURVE 1	BCC ECC	-13728.949 -13729.265	-3756806.612 -3756804.201	RADIUS 13.300m LENGTH 2.435m
CURVE 3	BCC ECC	-13736.957 -13741.223	-3756770.105 -3756721.803	RADIUS 182.414m LENGTH 48.634m

HORIZONTAL ALIGNMENT			
TANGENT #	LENGTH	START POINT (Y, X)	END POINT (Y, X)
TANGENT 1	16.313	13728.316 3756822.912	13728.949 3756806.612

NOTES / LEGEND

EX. ROADWAY / EX. ROAD MARKINGS
NEW PROPOSED ROAD MARKINGS
EXISTING BUILDING LINES
NEW TRAFFIC ISLAND / LANDSCAPING
NEW PROPOSED MEDIAN CLOSURES (INTERSECTION CHANGE TO LEFT-IN & LEFT-OUT OPERATION)

NOTE:
- CONTOURS REPRESENT DESIGN LEVELS
- THE LONG SECTIONS DISPLAYED ON THIS DRAWING ARE ONLY FOR ILLUSTRATION PURPOSES ONLY, REFER TO THE SETTING-OUT DRAWING ON DWG 34092.00-113-02 FOR SETTING-OUT INFORMATION.

APPROVED BY COUNCIL / CLIENT

CITY ENGINEER / CLIENT | REG. NO. | DATE

AMENDMENTS CODE

A,B,C... / : BEFORE TENDER
T0 / T : TENDER DRAWING
E1,E2,E... / : AFTER TENDER
2 / : AS BUILT

A: BY CLIENT
B: BY ARCHITECT
C: BY MECHANICAL OR ELECTRICAL
D: BY EIA
E: BY OTHER( )

DATE	INITIAL	No./CODE	REVISION DESCRIPTION
20/07/2024	FMG	T0D	ISSUED FOR TENDER
12/02/2026	FMG	T1D	ISSUED FOR TENDER

CLIENT

STELLENBOSCH
MUNICIPALITY • UMASIPALA • MUNISIPALITEIT

bvi 50 YEARS CELEBRATION EST 1967-2017
• ENGINEERING • PROCUREMENT • MANAGEMENT
ISO 9001:2015 ISO 14001:2015 CESA
Registration no. 1988/003150/07

PROVINCE	OFFICE	TEL	E-MAIL
Gauteng	Pretoria	(012) 940-1111	pta@bvi.co.za
	Polokwane	(015) 291-0400	plk@bvi.co.za
Free State	Bloemfontein	(051) 447-2127	bfn@bvi.co.za
	Welkom	(057) 353-2456	wel@bvi.co.za
Northern Cape	Upington	(054) 337-8000	upt@bvi.co.za
	Springbok	(027) 712-8114	spb@bvi.co.za
KwaZulu-Natal	Durban	(031) 566-8282	dbn@bvi.co.za
	Empangeni	(035) 772-0112	emp@bvi.co.za
Eastern Cape	Port Elizabeth	(041) 373-4243	pelz@bvi.co.za
	East London	(043) 726-3680	bla@bvi.co.za
Western Cape	Cape Town	(021) 527-7000	cpt@bvi.co.za

Visit or contact us online at www.bvigroup.co.za

PROJECT

REALIGNMENT OF THE R44/R310 AND ALEXANDER STREET JUNCTION

DRAWING TITLE

STRAND Rd & ADAM TAS TURNING LANE LONG SECTIONS - PHASE 1

APPROVED BY BVI

ENGINEER/TECHNOLOGIST | REG. NO. | DATE

SCALE	1:500 @ A0	DRAWN	JAS
DESIGNED	FMG	CHECKED	LP
PLAN NUMBER		REVISION NO.	DATE SAVED
34092.00-111-03		T1	12 February 2026

34092.00-111-03 REVT1_(STRAND RD & ADAM TAS TURNING LANE LONG SECTIONS - PHASE 1).DWG

O:\PROJECTS DRAWING\34000 - 34999\34092.00\CIVIL\TENDER DRAWINGS\REVT1\34092.00-111-03 REVT1_(STRAND RD & ADAM TAS TURNING LANE LONG SECTIONS - PHASE 1).DWG

0 10 50 100

Monday, February 16, 2026 5:50:24 AM

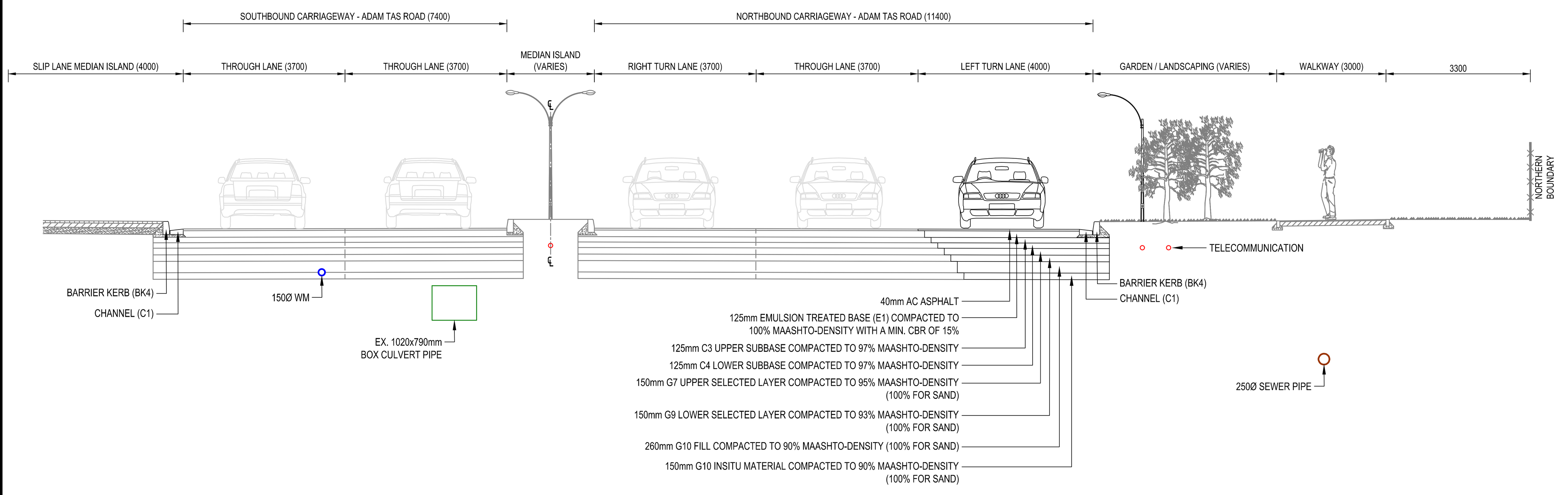

SECTION A - A
SCALE 1:75

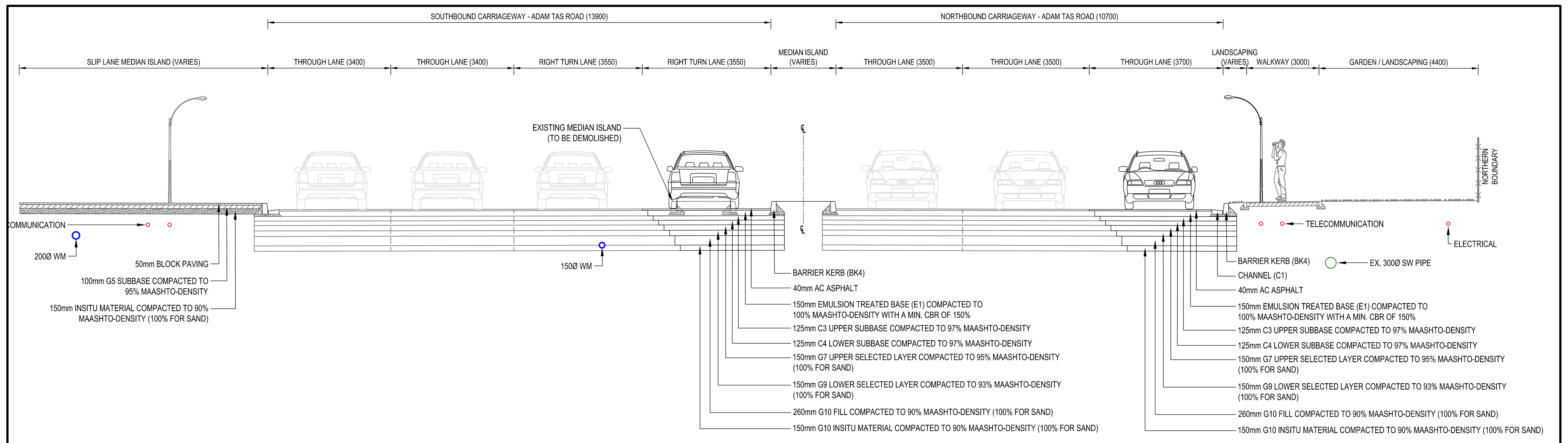

SECTION D - D
SCALE 1:75

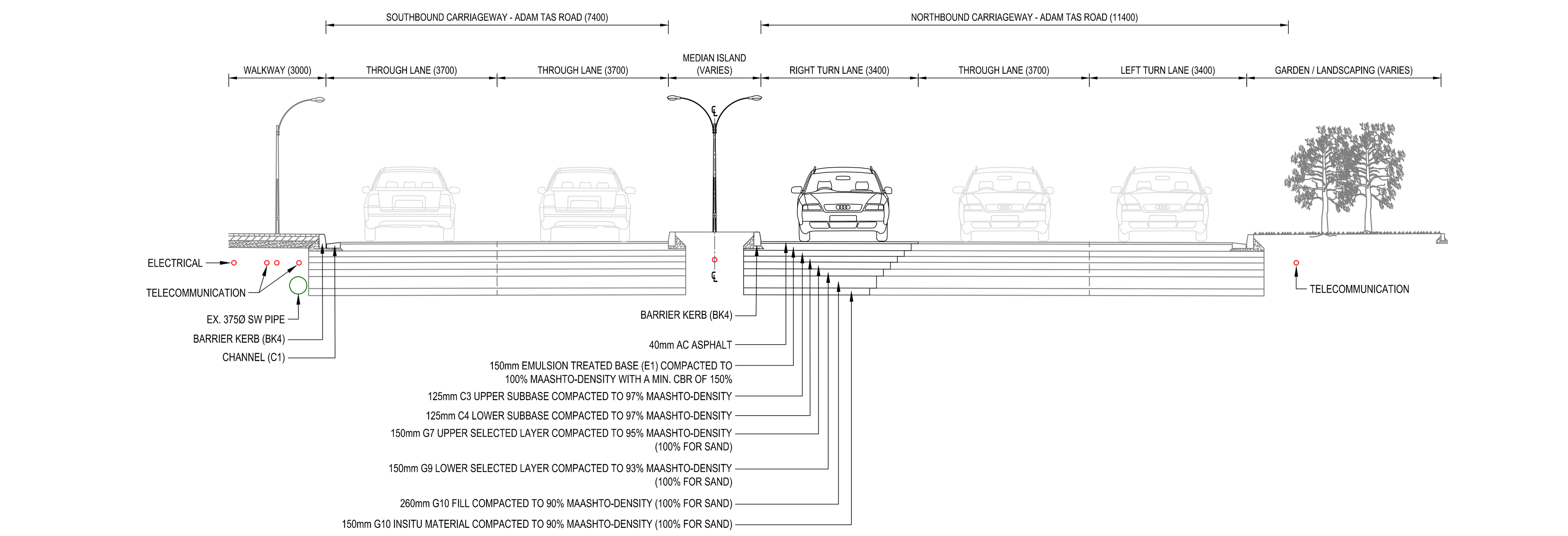

SECTION B - B
SCALE 1:75

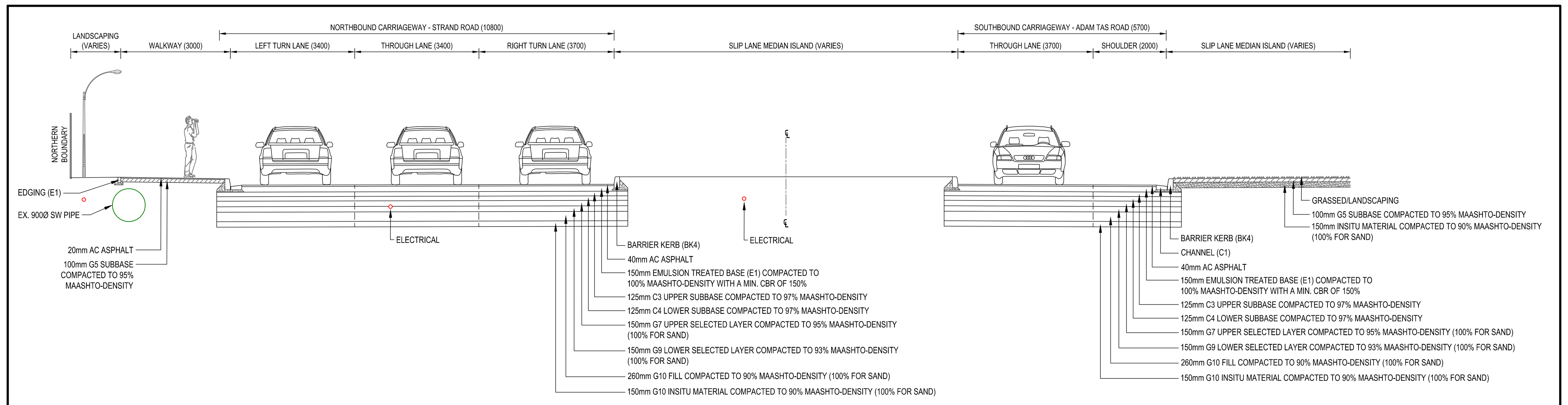

SECTION E - E
SCALE 1:75

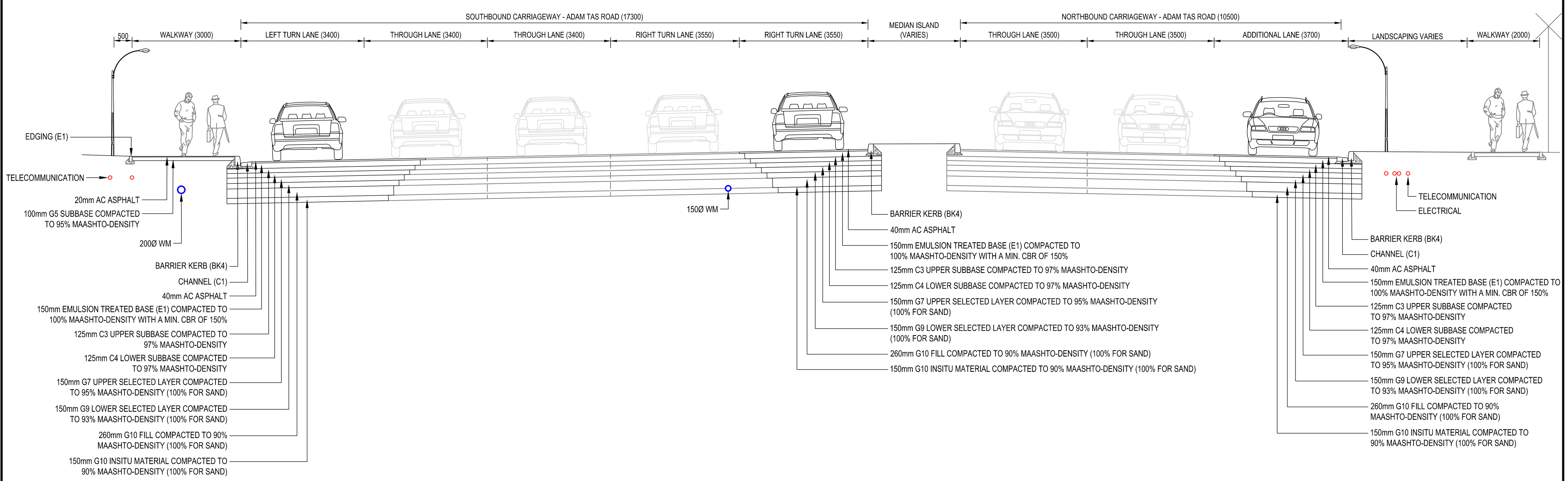

SECTION C - C
SCALE 1:75

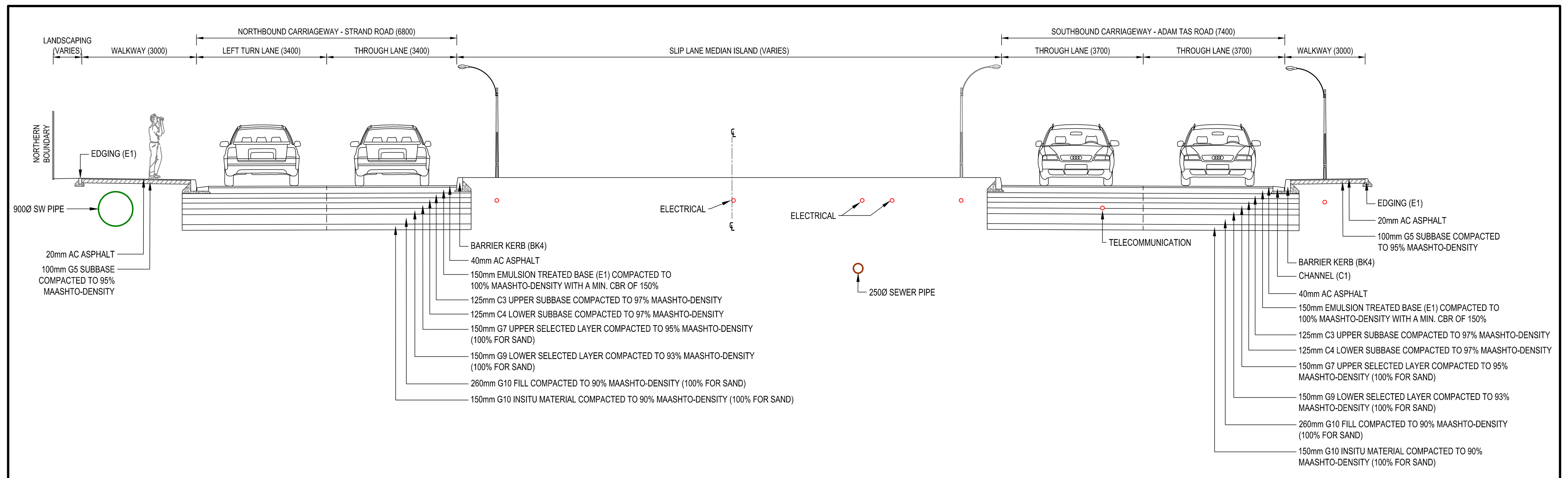

SECTION F - F
SCALE 1:75

NOTES / LEGEND

APPROVED BY COUNCIL / CLIENT

CITY ENGINEER / CLIENT | REG. NO. | DATE

AMENDMENTS CODE

A,B,C... / : BEFORE TENDER
T0 / : TENDER DRAWING
0,1,2,3.../ : AFTER TENDER
Z / : AS BUILT

/A : BY CLIENT
/B : BY ARCHITECT
/C : BY MECHANICAL OR ELECTRICAL
/D : BY BVi
/E : BY OTHER ( )

DATE	INITIAL	No./CODE	REVISION DESCRIPTION
20/07/2024	FMG	T0/D	ISSUED FOR TENDER
12/02/2026	FMG	T1/D	ISSUED FOR TENDER

CLIENT

STELLENBOSCH
MUNICIPALITY • UMASIPALA • MUNISIPALITEIT

bvi • ENGINEERING • PROCUREMENT • MANAGEMENT
50 YEAR CELEBRATION EST 1967-2017
CESA
Registration no. 1998/000157/07

PROVINCE	OFFICE	☎	E-MAIL
Gauteng	Pretoria	(012) 940-1111	pta@bvigp.co.za
	Polokwane	(015) 291-5400	js@bvilp.co.za
Free State	Bloemfontein	(051) 447-2137	bfn@bvifs.co.za
	Welkom	(057) 353-2499	wel@bvifs.co.za
Northern Cape	Upington	(054) 337-6600	upt@bvinc.co.za
	Springbok	(027) 712-3614	spk@bvinc.co.za
KwaZulu Natal	Durban	(031) 266-8382	dbn@bvikn.co.za
	Empangeni	(035) 772-6112	emp@bvikn.co.za
Eastern Cape	Port Elizabeth	(041) 373-4343	bviec@mweb.co.za
	East London	(043) 735-3889	Bk@bviec.co.za
Western Cape	Cape Town	(021) 527-7000	cpt@bviwc.co.za

Visit or contact us online at www.bvigroup.co.za

PROJECT
REALIGNMENT OF THE R44/R310 AND ALEXANDER STREET JUNCTION

DRAWING TITLE
ROAD CROSS SECTIONS LAYOUT (SHEET 1 OF 2) - PHASE 1

APPROVED BY BVi

ENGINEER/TECHNOLOGIST | REG. NO. | DATE

SCALE	1:75 @ A0	DRAWN	NF
DESIGNED	FMG	CHECKED	LP
PLAN NUMBER		REVISION NO.	DATE SAVED
34092.00-112-01		T1	8 January 2026

O:\PROJECTS DRAWINGS\34000 - 34999\34092.00\CIVIL\TENDER DRAWINGS\34092.00-112-01-REVT0_(TYPICAL CROSS SECTIONS - PHASE 1).DWG

34092.00-112-01-REVT0_(TYPICAL CROSS SECTIONS - PHASE 1).DWG

0 10 50 100

Thursday, 12 February 2026 15:53:27

ADAM TAS ROAD

LIMIT OF CONSTRUCTION

STRAND ROAD

LIMIT OF CONSTRUCTION

HEROLD STREET

STASIE STREET

STELLENBOSCH STATION

ADAM TAS ROAD

LIMIT OF CONSTRUCTION

DU TOIT STREET

LIMIT OF CONSTRUCTION

A

A

B

B

C

C

D

D

E

E

F

F

OS1C

RG2

LG1

Y 13800 X 3756000

Y 13700 X 3756000

Y 13600 X 3756000

0 10 50 100

NOTES / LEGEND

APPROVED BY COUNCIL / CLIENT

CITY ENGINEER / CLIENT — REG. NO. — DATE

AMENDMENTS CODE

A,B,C... / : BEFORE TENDER
TI / : TENDER DRAWING
T.1,T.2... / : AFTER TENDER
Z / : AS BUILT

A : BY CLIENT
B : BY ARCHITECT
C : BY MECHANICAL OR ELECTRICAL
D : BY BM
E : BY OTHER ( )

DATE	INITIAL	No./CODE	REVISION DESCRIPTION
20/07/2024	FMG	T0/D	ISSUED FOR TENDER
12/02/2026	FMG	T1/D	ISSUED FOR TENDER

CLIENT

STELLENBOSCH
MUNICIPALITY • UMASIPALA • MUNISIPALITEIT

bvi 50 YEAR CELEBRATION EST 1967-2017
• ENGINEERING • PROCUREMENT • MANAGEMENT

CESA

PROVINCE	OFFICE		E-MAIL
Gauteng	Pretoria	(012) 940-1111	pta@vgrp.co.za
	Rylaawa	(015) 291-5400	jb@vbi.co.za
Free State	Bloemfontein	(051) 447-2121	bfn@vbi.co.za
	Welkom	(057) 352-0400	wel@vbi.co.za
Northern Cape	Upington	(054) 337-6800	upt@vbi.co.za
	Springbok	(027) 712-8014	spb@vbi.co.za
KwaZulu Natal	Durban	(031) 266-6352	dbn@vbi.co.za
	Empangeni	(035) 772-6712	emp@vbi.co.za
Eastern Cape	Port Elizabeth	(041) 373-4000	hbw@vbi.co.za
	East London	(043) 726-3885	bl@vbi.co.za
Western Cape	Cape Town	(021) 527-1500	cpt@vbi.co.za

Visit or contact us online at www.bvigroup.co.za

Reproduction Act, 1998(63)1/2/247

PROJECT

REALIGNMENT OF THE R44/R310 AND ALEXANDER STREET JUNCTION

DRAWING TITLE

ROAD CROSS SECTION LAYOUT (SHEET 2 OF 2) - PHASE 1

APPROVED BY BVI

ENGINEER/TECHNOLOGIST — REG. NO. — DATE

SCALE	1:300 @ A0	DRAWN	JAS
DESIGNED	FMG	CHECKED	LP

PLAN NUMBER	REVISION NO.	DATE SAVED
34092.00-112-02	T1	12 February 2026

O:\PROJECTS DRAWINGS\34000 - 34999\34092.00\CIVIL\TENDER DRAWINGS\REVIT\34092.00-112-02 REVIT1_(ROAD CROSS SECTION LAYOUT (SHEET 2 OF 2) - PHASE 1).DWG

34092.00-112-02 REVIT1_(ROAD CROSS SECTION LAYOUT (SHEET 2 OF 2) - PHASE 1).DWG

Thursday, 12 February 2026 16:02:55

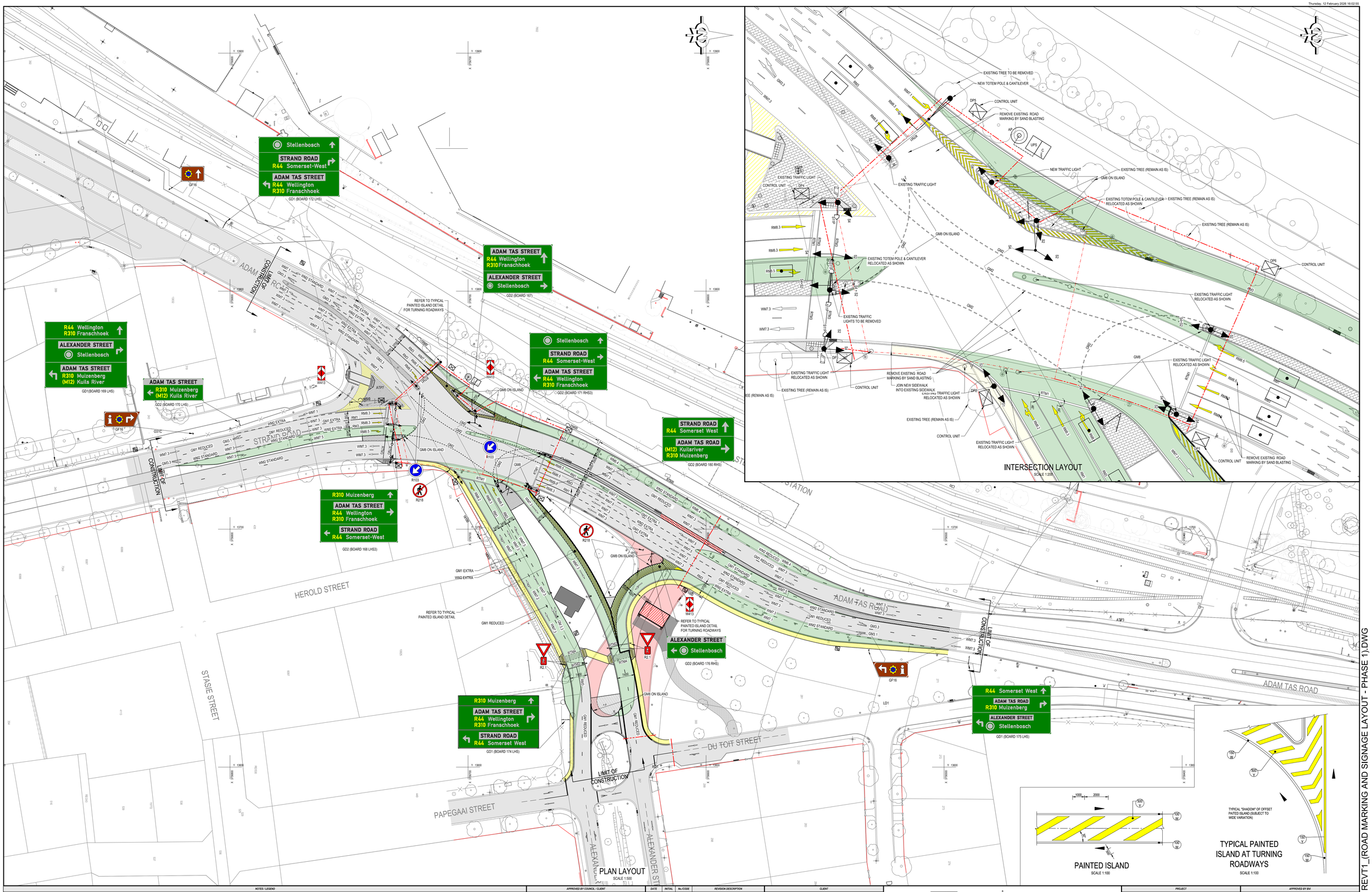

NOTES / LEGEND

- NEW TRAFFIC ISLAND / LANDSCAPING
- NEW PROPOSED MEDIAN CLOSURES (INTERSECTION CHANGE TO LEFT-IN & LEFT-OUT OPERATION)
- NEW PROPOSED SUSPENDED BRIDGE (BRIDGE-OVER-ROAD & BRIDGE-OVER-RAIL)
- EXISTING ROAD SECTIONS TO BE REMOVED.
- EXISTING ROADWAY TO REMAIN IN PLACE.
- NEW ROAD SECTIONS TO BE ADDED TO EXISTING ROADWAY.
- NEW SIDEWALK SECTIONS TO BE ADDED TO EXISTING SIDEWALKS.
- EX. ROADWAY / EX. ROAD MARKINGS
- NEW PROPOSED ROAD MARKINGS
- EXISTING BUILDING LINES

ROAD MARKING LINE WIDTHS:
RM1, GM1 & RTM3 = 100mm
RM3, WM2 & RTM2 = 200mm
RTM1 = 300mm

0 10 50 100

APPROVED BY COUNCIL / CLIENT

CITY ENGINEER / CLIENT — REG. NO. — DATE

AMENDMENTS CODE

A,B,C... / BEFORE TENDER
T0 / T1 / T2 ... / TENDER DRAWING
E1,E2,E3... / AFTER TENDER
Z / AS BUILT

A: BY CLIENT
B: BY ARCHITECT
C: BY MECHANICAL OR ELECTRICAL
D: BY EN
E: BY OTHER ( )

DATE	INITIAL	No./CODE	REVISION DESCRIPTION
20/07/2024	FMG	T0/D	ISSUED FOR TENDER
12/02/2026	FMG	T1/D	ISSUED FOR TENDER

CLIENT

STELLENBOSCH MUNICIPALITY • UMASIPALA • MUNISIPALITEIT

bvi 50 YEAR CELEBRATION EST 1967-2017
• ENGINEERING • PROCUREMENT • MANAGEMENT
CESA
Registration No. 1966/007/07/07

PROVINCE	OFFICE	TEL	E-MAIL
Gauteng	Pretoria	(012) 998-7777	pta@bvi.co.za
	Polokwane	(015) 291-0400	plk@bvi.co.za
Free State	Bloemfontein	(051) 447-2727	bfn@bvi.co.za
	Welkom	(057) 353-2486	wel@bvi.co.za
Northern Cape	Upington	(054) 337-6855	upt@bvi.co.za
	Springbok	(027) 712-8014	spb@bvi.co.za
KwaZulu-Natal	Durban	(031) 266-4262	dbn@bvi.co.za
	Empangeni	(035) 772-4112	emp@bvi.co.za
Eastern Cape	Port Elizabeth	(041) 373-4243	hms@bvi.co.za
	East London	(043) 726-0885	bfn@bvi.co.za
Western Cape	Cape Town	(021) 527-7000	cpt@bvi.net.za

Visit or contact us online at www.bvigroup.co.za

PROJECT

REALIGNMENT OF THE R44/R310 AND ALEXANDER STREET JUNCTION

DRAWING TITLE

ROAD MARKING AND SIGNAGE LAYOUT - PHASE 1

APPROVED BY BVI

ENGINEER/TECHNOLOGIST — REG. NO. — DATE

SCALE	1:500 @ A0	DRAWN	N.FALAL
DESIGNED	FM.GREEFF	CHECKED	CJ.de JAGER
PLAN NUMBER		REVISION NO.	DATE SAVED
34092.00-114-01		T1	12 February 2026

34092.00-114-01 REVT1_(ROAD MARKING AND SIGNAGE LAYOUT - PHASE 1).DWG

© PROJECTS DRAWINGS\34000 - 34999\34092.00\CIVIL\TENDER DRAWING\REVT1\34092.00-114-01 REVT1_(ROAD MARKING AND SIGNAGE LAYOUT - PHASE 1).DWG

SIGN No.	STAKE VALUE	ROAD	SIGN TYPE	LETTER HEIGHT CAPITAL	LETTER HEIGHT SMALL	RETRO-REFLECTIVITY	SIGNFACE DESIGN & DIMENSIONS OF ROADS SIGNS	POSITION OF ROAD SIGNS	DETAIL OF SUPPORT REFER TO WCS/56/1/D1 & WCS/56/1/D2 NUMBER POSTS	NUMBER STAYS	FOUNDATION WIDTH	FOUNDATION DEPTH	POLE LENGTH L (MIN)	REMARKS
No. 1	SEE POSITION ON DWG NO. 34092.00-114-01 REV F	TRUNK ROAD	GF2 (LHS)	210	150	BACKGROUND : BUFFALO BROWN, CLASS 2 AS PER WCG ROAD SIGN POLICY BORDER : WHITE, RETRO-REFLECTIVE, CLASS 1 LEGEND : WHITE, RETRO-REFLECTIVE, CLASS 3 ARROWS : WHITE, RETRO-REFLECTIVE, CLASS 3 LETTERS : WHITE, RETRO-REFLECTIVE, CLASS 3 SYMBOLS : WHITE/ LOGO COLOR, RETRO - REFLECTIVE, CLASS 3 (ADD GFS B1-2-RSA LOGO) (ADD GFS B5-8 LOGO)	 REF. 7	B = 750mm (OR C/L OF MEDIAN) D = 2100mm REFER WCS-56-1-C1 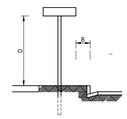	1 X 75Ø	NONE	600 SQ	800	3600	NEW SIGN
No. 1	SEE POSITION ON DWG NO. 34092.00-114-01 REV F	TRUNK ROAD	GF2 (RHS)	210	150	BACKGROUND POLICY : BUFFALO BROWN, CLASS 1 AS PER WCG ROAD SIGN BORDER : WHITE, RETRO-REFLECTIVE, CLASS 1 LEGEND : WHITE, RETRO-REFLECTIVE, CLASS 3 ARROWS : WHITE, RETRO-REFLECTIVE, CLASS 3 LETTERS : WHITE, RETRO-REFLECTIVE, CLASS 3 SYMBOLS : WHITE/ LOGO COLOR, RETRO - REFLECTIVE, CLASS 3 (ADD GFS B1-2-RSA LOGO) (ADD GFS B5-8 LOGO)	 REF. 7	B = 750mm (OR C/L OF MEDIAN) D = 2100mm REFER WCS-56-1-C1 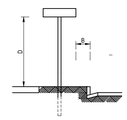	1 X 75Ø	NONE	600 SQ	800	3600	NEW SIGN
No. 1	SEE POSITION ON DWG NO. 34092.00-114-01 REV F	TRUNK ROAD	GF2	210	150	BACKGROUND POLICY : BUFFALO BROWN, CLASS 1 AS PER WCG ROAD SIGN BORDER : WHITE, RETRO-REFLECTIVE, CLASS 1 LEGEND : WHITE, RETRO-REFLECTIVE, CLASS 3 ARROWS : WHITE, RETRO-REFLECTIVE, CLASS 3 LETTERS : WHITE, RETRO-REFLECTIVE, CLASS 3 SYMBOLS : WHITE/ LOGO COLOR, RETRO - REFLECTIVE, CLASS 3 (ADD GFS B1-2-RSA LOGO)	 REF. 7	B = 750mm (OR C/L OF MEDIAN) D = 2100mm REFER WCS-56-1-C1 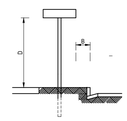	1 X 75Ø	NONE	600 SQ	800	3600	NEW SIGN
No. 3	SEE POSITION ON DWG NO. 34092.00-114-01 REV F	TRUNK ROAD	R218	210	150	BACKGROUND : BACKGROUND IS WHITE, CLASS 1 RETRO-REFLECTIVITY, SEMI-MATT BORDER : RED, RETRO-REFLECTIVE, CLASS 1 LINES : RED, RETRO-REFLECTIVE, CLASS 1 SYMBOLS : BLACK, RETRO - REFLECTIVE, SEMI-MATT AS PER WCG ROAD SIGN POLICY	 REF. 7	B = 750mm (OR C/L OF MEDIAN) D = 2100mm REFER WCS-56-1-C1 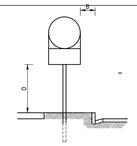	1 X 75Ø	NONE	600 SQ	800	3600	NEW SIGN
No. 3	SEE POSITION ON DWG NO. 34092.00-114-01 REV F	TRUNK ROAD	R103	210	150	BACKGROUND : BLUE, CLASS 1 AS PER WCG ROAD SIGN POLICY BORDER : WHITE, RETRO-REFLECTIVE, CLASS 1 SYMBOLS : WHITE, RETRO - REFLECTIVE, CLASS 3	 REF. 7	B = 750mm (OR C/L OF MEDIAN) D = 900mm REFER WCS-56-1-C1 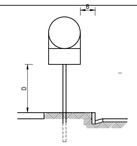	1 X 75Ø	NONE	600 SQ	800	1500	NEW SIGN
No. 4	SEE POSITION ON DWG NO. 34092.00-114-01 REV F	TRUNK ROAD	W413	210	150	BACKGROUND : WHITE, CLASS 3 AS PER WCG ROAD SIGN POLICY BORDER : NONE SYMBOLS : RED, RETRO - REFLECTIVE, CLASS 3	 REF. 7	B = 500mm (OR C/L OF MEDIAN) D = 750mm (* SPECIAL) REFER WCS-56-1-C1 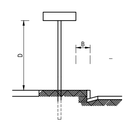	1 X 50 SQ	NONE	600 SQ	800	1500	NEW SIGN
No. 4	SEE POSITION ON DWG NO. 34092.00-114-01 REV F	TRUNK ROAD	R2.1	210	150	BACKGROUND : WHITE, RETRO-REFLECTIVE, CLASS 3 AS PER WCG ROAD SIGN POLICY OUTER BORDER : WHITE, RETRO-REFLECTIVE, CLASS 3 INNER BORDER : RED RETRO-REFLECTIVE, CLASS 3 SYMBOLS : WHITE, RETRO - REFLECTIVE, CLASS 3 SYMBOLS B/G : RED, RETRO - REFLECTIVE, CLASS 3	 REF. 7	A = 1500mm (OR C/L OF MEDIAN) D = 2100mm REFER WCS-56-1-C1 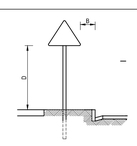	1 X 75Ø	NONE	600 SQ	800	3600	NEW SIGN

NOTE:
READ IN CONJUCTION WITH DRAWING 34092.00-114-01 FOR POSITION OF SIGNAGE BOARDS

NOTES / LEGEND

GENERAL NOTES:
- TYPEFACE: TRANSPORT ALPHABET (SARTSM SPEC.)
- BACKGROUND COLOUR (GREEN): SARTSM SPEC. (PANTONE 3425C / RAL 6029).
- SIGN SUBSTRATE: ALUMINIUM ALLOY, 2-3 MM THICK, ANTI-CORROSION TREATED.

APPROVED BY COUNCIL / CLIENT

CITY ENGINEER / CLIENT | REG. NO. | DATE

AMENDMENTS CODE

A,B,C... / : BEFORE TENDER
T0 : TENDER DRAWING
1/1,2,3... : AFTER TENDER
Z : AS BUILT

A: BY CLIENT
B: BY ARCHITECT
C: BY MECHANICAL OR ELECTRICAL
D: BY BV
E: BY OTHER ( )

DATE	INITIAL	No./CODE	REVISION DESCRIPTION
12/02/2026	FMG	T0/D	ISSUED FOR TENDER

CLIENT

STELLENBOSCH
STELLENBOSCH • IDAS VALLEI • FRANSCHHOEK
MUNICIPALITY • UMASIPALA • MUNISIPALITEIT

bvi 50 YEARS CELEBRATION EST 1967-2017
• ENGINEERING • PROCUREMENT • MANAGEMENT
CESA
Registration No. 1988/005150/07

PROVINCE | OFFICE | ☎ | E-MAIL
Gauteng | Pretoria | (012) 940-1111 | pta@vgs.co.za
Polokwane | (015) 291-5400 | plk@vds.co.za
Free State | Bloemfontein | (051) 481-2121 | bfn@vds.co.za
Welkom | (057) 353-0456 | wel@vds.co.za
Northern Cape | Upington | (054) 337-6800 | upt@vds.co.za
Springbok | (027) 712-8014 | spk@vds.co.za
KwaZulu-Natal | Durban | (031) 264-6302 | dbn@vds.co.za
Empangeni | (035) 772-4112 | emp@vds.co.za
Eastern Cape | Port Elizabeth | (041) 373-4242 | hms@vds.co.za
East London | (043) 726-9889 | tbs@vds.co.za
Western Cape | Cape Town | (021) 527-7000 | cpt@bvibvi.co.za
Visit or contact us online at www.bvigroup.co.za

PROJECT

REALIGNMENT OF THE R44/R310 AND ALEXANDER STREET JUNCTION

DRAWING TITLE

ROAD SIGN BOARD SCHEDULE SHEET 1

APPROVED BY BVI

ENGINEER/TECHNOLOGIST | REG. NO. | DATE

SCALE	1:50 @ A0	DRAWN	S. DLISANI
DESIGNED	FM.GREEF	CHECKED	CJ.de JAGER

PLAN NUMBER	REVISION NO.	DATE SAVED
34092.00-114-03	T0	12 February 2026

34092.00-114-03-REVT0_(ROAD SIGN BOARD SCHEDULE SHEET 1).DWG

0 10 50 100

O:\PROJECTS DRAWINGS\34000 - 34999\34092.00\CIVIL\TENDER DRAWINGS\REVT1\34092.00-114-03-REVT0_(ROAD SIGN BOARD SCHEDULE SHEET 1).DWG

SIGN No.	STAKE VALUE	ROAD	SIGN TYPE	LETTER HEIGHT		RETRO-REFLECTIVITY	SIGNFACE DESIGN & DIMENSIONS OF ROADS SIGNS	POSITION OF ROAD SIGNS	DETAIL OF SUPPORT REFER TO WCS/56/1/D1 & WCS/56/1/D2					REMARKS
				CAPITAL	SMALL				NUMBER		FOUNDATION		POLE LENGTH	
									POSTS	STAYS	WIDTH	DEPTH	L (MIN)	
No. 1	SEE POSITION ON DWG NO. 34092.00-114-01 REV F	TRUNK ROAD	GD2.01	210	150	BACKGROUND : GREEN, CLASS 1 AS PER WCG ROAD SIGN POLICY BORDER : WHITE, RETRO-REFLECTIVE, CLASS 1 STACK B/G : WHITE, RETRO-REFLECTIVE, CLASS 1 ARROWS : WHITE, RETRO-REFLECTIVE, CLASS 3 LETTERS : WHITE / BLACK / YELLOW, RETRO-REFLECTIVE, CLASS 3 SYMBOLS : WHITE, RETRO - REFLECTIVE, CLASS 3 ROUTE NUMBER : YELLOW, RETRO-REFLECTIVE, CLASS 3	 REF. 170 (TYPE: GD1)	REFER WCS-56-1-C1 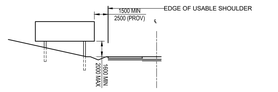	2 X 150Ø	2 X 100Ø	600	900	3600	NEW SIGN
No. 1	SEE POSITION ON DWG NO. 34092.00-114-01 REV F	TRUNK ROAD	GD2.01	210	150	BACKGROUND : GREEN, CLASS 1 AS PER WCG ROAD SIGN POLICY BORDER : WHITE, RETRO-REFLECTIVE, CLASS 1 STACK B/G : WHITE, RETRO-REFLECTIVE, CLASS 1 ARROWS : WHITE, RETRO-REFLECTIVE, CLASS 3 LETTERS : WHITE / BLACK / YELLOW, RETRO-REFLECTIVE, CLASS 3 SYMBOLS : WHITE, RETRO - REFLECTIVE, CLASS 3 ROUTE NUMBER : YELLOW, RETRO-REFLECTIVE, CLASS 3	 REF. 171 TYPE:GD2	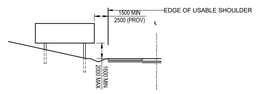	3 X 150Ø	3 X 100Ø	600	900	3600	NEW SIGN
No. 1	SEE POSITION ON DWG NO. 34092.00-114-01 REV F	TRUNK ROAD	GD2.01	210	150	BACKGROUND : GREEN, CLASS 1 BORDER : WHITE, RETRO-REFLECTIVE, CLASS 1 STACK B/G : WHITE, RETRO-REFLECTIVE, CLASS 1 ARROWS : WHITE, RETRO-REFLECTIVE, CLASS 3 LETTERS : WHITE / BLACK / YELLOW, RETRO-REFLECTIVE, CLASS 3 SYMBOLS : WHITE, RETRO - REFLECTIVE, CLASS 3 ROUTE NUMBER : YELLOW, RETRO-REFLECTIVE, CLASS 3	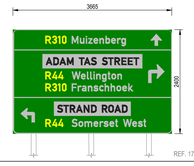 REF. 174 (Type: GD2)	REFER WCS-56-1-C1 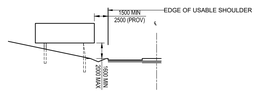	3 X 150Ø	3 X 100Ø	600	900	3600	NEW SIGN
No. 1	SEE POSITION ON DWG NO. 34092.00-114-01 REV F	TRUNK ROAD	GD2.01	210	150	BACKGROUND : GREEN, CLASS 1 AS PER WCG ROAD SIGN POLICY BORDER : WHITE, RETRO-REFLECTIVE, CLASS 1 STACK B/G : WHITE, RETRO-REFLECTIVE, CLASS 1 ARROWS : WHITE, RETRO-REFLECTIVE, CLASS 3 LETTERS : WHITE / BLACK / YELLOW, RETRO-REFLECTIVE, CLASS 3 SYMBOLS : WHITE, RETRO - REFLECTIVE, CLASS 3 ROUTE NUMBER : YELLOW, RETRO-REFLECTIVE, CLASS 3	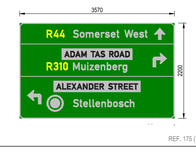 REF. 175 (TYPE: GD2)	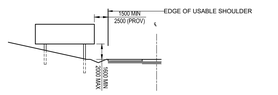	3 X 150Ø	3 X 100Ø	600	900	3600	NEW SIGN
No. 1	SEE POSITION ON DWG NO. 34092.00-114-01 REV F	TRUNK ROAD	GD1	210	150	BACKGROUND : GREEN, CLASS 1 BORDER : WHITE, RETRO-REFLECTIVE, CLASS 1 STACK B/G : WHITE, RETRO-REFLECTIVE, CLASS 1 ARROWS : WHITE, RETRO-REFLECTIVE, CLASS 3 LETTERS : WHITE / BLACK / YELLOW, RETRO-REFLECTIVE, CLASS 3 SYMBOLS : WHITE, RETRO - REFLECTIVE, CLASS 3 ROUTE NUMBER : YELLOW, RETRO-REFLECTIVE, CLASS 3	 REF. 176 (TYPE: GD1)	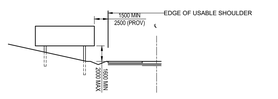	2 X 150Ø	2 X 100Ø	600	900	3600	NEW SIGN
No. 1	SEE POSITION ON DWG NO. 34092.00-114-01 REV F	TRUNK ROAD	GD2.01	210	150	BACKGROUND : GREEN, CLASS 1 BORDER : WHITE, RETRO-REFLECTIVE, CLASS 1 STACK B/G : WHITE, RETRO-REFLECTIVE, CLASS 1 ARROWS : WHITE, RETRO-REFLECTIVE, CLASS 3 LETTERS : WHITE / BLACK / YELLOW, RETRO-REFLECTIVE, CLASS 3 SYMBOLS : WHITE, RETRO - REFLECTIVE, CLASS 3 ROUTE NUMBER : YELLOW, RETRO-REFLECTIVE, CLASS 3	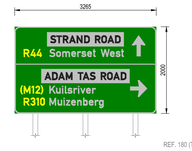 REF. 180 (TYPE: GD2)	REFER WCS-56-1-C1 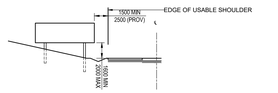	3 X 150Ø	3 X 100Ø	600	900	3600	NEW SIGN
No. 1	SEE POSITION ON DWG NO. 34092.00-114-01 REV F	TRUNK ROAD	GD2.01	210	150	BACKGROUND : GREEN, CLASS 1 AS PER WCG ROAD SIGN POLICY BORDER : WHITE, RETRO-REFLECTIVE, CLASS 1 STACK B/G : WHITE, RETRO-REFLECTIVE, CLASS 1 ARROWS : WHITE, RETRO-REFLECTIVE, CLASS 3 LETTERS : WHITE / BLACK / YELLOW, RETRO-REFLECTIVE, CLASS 3 SYMBOLS : WHITE, RETRO - REFLECTIVE, CLASS 3 ROUTE NUMBER : YELLOW, RETRO-REFLECTIVE, CLASS 3	 REF. 169 (TYPE: GD2)	REFER WCS-56-1-C1 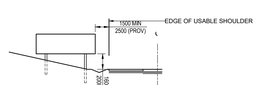	3 X 150Ø	3 X 100Ø	600	900	3600	NEW SIGN

NOTE:
READ IN CONJUCTION WITH DRAWING 34092.00-114-01 FOR POSITION OF SIGNAGE BOARDS

GENERAL NOTES:
- TYPEFACE: TRANSPORT ALPHABET (SARTSM SPEC.)
- BACKGROUND COLOUR (GREEN): SARTSM SPEC. (PANTONE 3425C / RAL 6029).
- SIGN SUBSTRATE: ALUMINIUM ALLOY, 2-3 MM THICK, ANTI-CORROSION TREATED.

CITY ENGINEER / CLIENT — REG. NO. — DATE

AMENDMENTS CODE

A,B,C... / BEFORE TENDER
T0 / TENDER DRAWING
T,T,T,1... / AFTER TENDER
Z / AS BUILT

A: BY CLIENT
B: BY ARCHITECT
C: BY MECHANICAL OR ELECTRICAL
D: BY BH
E: BY OTHER( )

12/02/2026	FMG	T0/D	ISSUED FOR TENDER

CLIENT

STELLENBOSCH
MUNICIPALITY • UMASIPALA • MUNISIPALITEIT

CESA
• ENGINEERING • PROCUREMENT • MANAGEMENT

PROVINCE	OFFICE		E-MAIL
Gauteng	Pretoria	(012) 940-1111	pta@vbvi.co.za
	Rabaane	(012) 241-0400	rab@vbvi.co.za
Free State	Bloemfontein	(051) 447-2127	bfn@vbvi.co.za
	Welkom	(057) 353-2488	wel@vbvi.co.za
Northern Cape	Upington	(054) 337-8800	upt@vbvi.co.za
	Springbok	(027) 712-8214	spg@vbvi.co.za
KwaZulu-Natal	Durban	(031) 266-6262	dbn@vbvi.co.za
	Empangeni	(035) 772-6712	emp@vbvi.co.za
Eastern Cape	Port Elizabeth	(041) 374-0420	hms@vbvi.co.za
	East London	(043) 726-3885	bl@vbvi.co.za
Western Cape	Cape Town	(021) 527-7300	cpt@vbvi.co.za

Visit or contact an online at www.bvigroup.co.za

Registration no. 1998/005167/07

REALIGNMENT OF THE R44/R310 AND ALEXANDER STREET JUNCTION

DRAWING TITLE

ROAD SIGN BOARD SCHEDULE SHEET 2

ENGINEER/TECHNOLOGIST		REG. NO.	DATE
SCALE	1:50 @ A0	DRAWN	S. DLISANI
DESIGNED	FM.GREEF	CHECKED	CJ.de JAGER
PLAN NUMBER		REVISION NO.	DATE SAVED
34092.00-114-04		T0	12 February 2026

34092.00-114-04 & 05-REVT0_(STANDARD DETAILS SIGNAGE BOARDS).DWG

O:\PROJECTS DRAWINGS\34000 - 34999\34092.00\CIVIL\TENDER DRAWINGS\REVT1\34092.00-114-04 & 05-REVT0_(STANDARD DETAILS SIGNAGE BOARDS).DWG

0 10 50 100

SIGN No.	STAKE VALUE	ROAD	SIGN TYPE	LETTER HEIGHT		RETRO-REFLECTIVITY	SIGNFACE DESIGN & DIMENSIONS OF ROADS SIGNS	POSITION OF ROAD SIGNS	DETAIL OF SUPPORT REFER TO WCS/56/1/D1 & WCS/56/1/D2					REMARKS
							REF. 777		NUMBER		FOUNDATION		POLE LENGTH	
				CAPITAL	SMALL				POSTS	STAYS	WIDTH	DEPTH	L (MIN)	
No. 1	SEE POSITION ON DWG NO. 34092.00-114-01 REV F	TRUNK ROAD	GD2.01	210	150	BACKGROUND : GREEN, CLASS 1 AS PER WCG ROAD SIGN POLICY BORDER : WHITE, RETRO-REFLECTIVE, CLASS 1 LEGEND : WHITE, RETRO-REFLECTIVE, CLASS 1 STACK B/G : WHITE, RETRO-REFLECTIVE, CLASS 1 ARROWS : WHITE, RETRO-REFLECTIVE, CLASS 3 LETTERS : WHITE / BLACK / YELLOW, RETRO-REFLECTIVE, CLASS 3 SYMBOLS : WHITE, RETRO - REFLECTIVE, CLASS 3 ROUTE NUMBER : YELLOW, RETRO-REFLECTIVE, CLASS 3	 REF. 167 (TYPE GD2.01)	REFER WCS-56-1-C1 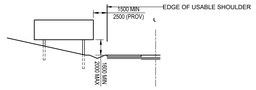	3 X 150Ø	3 X 100Ø	600	900	3600	NEW SIGN
No. 1	SEE POSITION ON DWG NO. 34092.00-114-01 REV F	TRUNK ROAD	GD2.01	210	150	BACKGROUND : GREEN, CLASS 1 AS PER WCG ROAD SIGN POLICY BORDER : WHITE, RETRO-REFLECTIVE, CLASS 1 LEGEND : WHITE, RETRO-REFLECTIVE, CLASS 1 STACK B/G : WHITE, RETRO-REFLECTIVE, CLASS 1 ARROWS : WHITE, RETRO-REFLECTIVE, CLASS 3 LETTERS : WHITE / BLACK / YELLOW, RETRO-REFLECTIVE, CLASS 3 SYMBOLS : WHITE, RETRO - REFLECTIVE, CLASS 3 ROUTE NUMBER : YELLOW, RETRO-REFLECTIVE, CLASS 3	 REF. 172 (TYPE GD2.01)	REFER WCS-56-1-C1 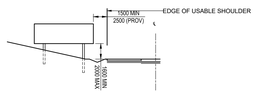	3 X 150Ø	3 X 100Ø	600	900	3600	NEW SIGN
No. 1	SEE POSITION ON DWG NO. 34092.00-114-01 REV F	TRUNK ROAD	GD2.01	210	150	BACKGROUND : GREEN, CLASS 1 AS PER WCG ROAD SIGN POLICY BORDER : WHITE, RETRO-REFLECTIVE, CLASS 1 LEGEND : WHITE, RETRO-REFLECTIVE, CLASS 1 STACK B/G : WHITE, RETRO-REFLECTIVE, CLASS 1 ARROWS : WHITE, RETRO-REFLECTIVE, CLASS 3 LETTERS : WHITE / BLACK / YELLOW, RETRO-REFLECTIVE, CLASS 3 SYMBOLS : WHITE, RETRO - REFLECTIVE, CLASS 3 ROUTE NUMBER : YELLOW, RETRO-REFLECTIVE, CLASS 3	 REF. 168 (TYPE GD2.01)	REFER WCS-56-1-C1 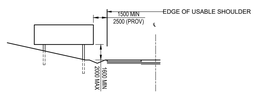	3 X 150Ø	3 X 100Ø	600	900	3600	NEW SIGN

NOTE:
READ IN CONJUCTION WITH DRAWING 34092.00-114-01 FOR POSITION OF SIGNAGE BOARDS

GENERAL NOTES:
- TYPEFACE: TRANSPORT ALPHABET (SARTSM SPEC.)
- BACKGROUND COLOUR (GREEN): SARTSM SPEC. (PANTONE 3425C / RAL 6029).
- SIGN SUBSTRATE: ALUMINIUM ALLOY, 2+3 MM THICK, ANTICORROSION TREATED.

CITY ENGINEER / CLIENT | REG. NO. | DATE

AMENDMENTS CODE

A,B,C... / : BEFORE TENDER
T0 / : TENDER DRAWING
1,1.2,../ : AFTER TENDER
Z / : AS BUILT

A: BY CLIENT
B: BY ARCHITECT
C: BY MECHANICAL OR ELECTRICAL
D: BY BH
E: BY OTHER ( )

12/02/2026	FMG	T0/D	ISSUED FOR TENDER

CLIENT

STELLENBOSCH
UMASIPALA • UMASIPALA • MUNISIPALITEIT

bvi 50 YEAR CELEBRATION EST 1967-2017
• ENGINEERING • PROCUREMENT • MANAGEMENT
Visit or contact us online at www.bvigroup.co.za
Registration no. 1998/020167

CESA

PROVINCE	OFFICE		E-MAIL
Gauteng	Pretoria	(012) 346-7111	pta@bvi.co.za
	Rietvlei	(012) 374-6400	rvl@bvi.co.za
Free State	Bloemfontein	(051) 447-2121	bfn@bvi.co.za
	Welkom	(057) 353-0499	wel@bvi.co.za
Northern Cape	Upington	(054) 337-8800	upt@bvi.co.za
	Springbok	(027) 712-8014	spg@bvi.co.za
KwaZulu Natal	Durban	(031) 266-6352	dbn@bvi.co.za
	Empangeni	(035) 772-4112	emp@bvi.co.za
Eastern Cape	Port Elizabeth	(041) 373-6400	bvie@mweb.co.za
	East London	(043) 726-3885	bl@bvi.co.za
Western Cape	Cape Town	(021) 527-7000	cpt@bvivac.co.za

REALIGNMENT OF THE R44/R310 AND ALEXANDER STREET JUNCTION

DRAWING TITLE

ROAD SIGN BOARD SCHEDULE SHEET 3

ENGINEER/TECHNOLOGIST | REG. NO. | DATE

SCALE	1:50 @ A0	DRAWN	S. DLISANI
DESIGNED	FM.GREEF	CHECKED	CJ.de JAGER
PLAN NUMBER		REVISION NO.	DATE SAVED
34092.00-114-05		T0	12 February 2026

0 10 50 100

34092.00-114-04 & 05-REVT0_(STANDARD DETAILS SIGNAGE BOARDS).DWG

O:\PROJECTS DRAWINGS\34000 - 34999\34092.00\CIVIL\TENDER DRAWINGS\REVT1\34092.00-114-04 & 05-REVT0_(STANDARD DETAILS SIGNAGE BOARDS).DWG

Thursday, 12 February 2026 16:38:50

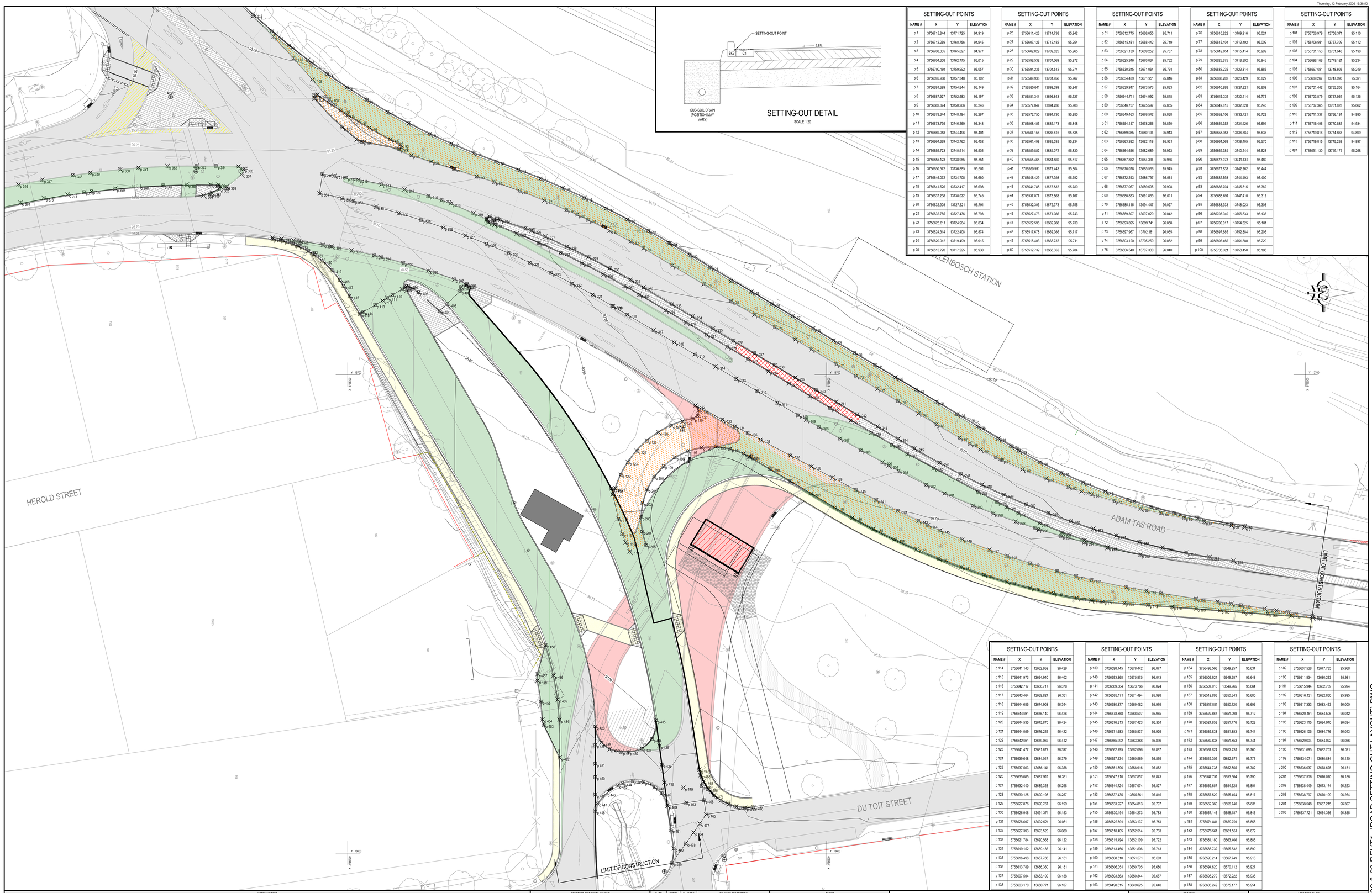

Thursday, 12 February 2026 16:40:14

SETTING-OUT POINTS

NAME #	X	Y	ELEVATION
p 210	3756705.269	13741.901	95.396
p 211	3756702.800	13741.507	95.408
p 212	3756700.331	13741.114	95.421
p 213	3756697.840	13740.717	95.433
p 214	3756692.969	13739.773	95.475
p 215	3756688.145	13738.666	95.518
p 216	3756683.206	13737.322	95.587
p 217	3756680.406	13736.476	95.617
p 218	3756678.465	13735.721	95.636
p 219	3756673.762	13733.735	95.683
p 220	3756671.001	13732.276	95.719
p 221	3756670.984	13732.456	95.711
p 222	3756670.972	13732.575	95.703
p 223	3756670.320	13733.000	95.689
p 224	3756668.135	13732.290	95.712
p 225	3756662.871	13730.578	95.747
p 226	3756661.633	13730.114	95.761
p 227	3756658.752	13728.860	95.779
p 228	3756654.210	13726.769	95.819
p 229	3756649.723	13724.564	95.865
p 230	3756645.294	13722.244	95.926
p 231	3756640.925	13719.812	95.989
p 232	3756638.236	13718.241	96.001
p 233	3756632.319	13714.720	96.044
p 234	3756628.022	13712.163	96.074

SETTING-OUT POINTS

NAME #	X	Y	ELEVATION
p 235	3756623.725	13709.607	96.104
p 236	3756619.428	13707.050	96.136
p 237	3756615.131	13704.494	96.166
p 238	3756610.834	13701.937	96.170
p 239	3756606.537	13699.381	96.176
p 240	3756602.240	13696.824	96.182
p 241	3756597.943	13694.268	96.186
p 242	3756593.646	13691.711	96.159
p 243	3756589.349	13689.155	96.146
p 244	3756585.052	13686.598	96.131
p 245	3756581.691	13684.599	96.126
p 246	3756576.406	13681.574	96.098
p 247	3756571.992	13679.226	96.088
p 248	3756567.515	13677.000	96.070
p 249	3756562.977	13674.901	96.067
p 250	3756558.383	13672.928	96.039
p 251	3756553.736	13671.083	96.018
p 252	3756549.040	13669.368	95.990
p 253	3756544.297	13667.784	95.969
p 254	3756539.513	13666.333	95.955
p 255	3756534.690	13665.015	95.937
p 256	3756529.832	13663.831	95.922
p 257	3756524.943	13662.783	95.908
p 258	3756520.027	13661.871	95.887
p 259	3756515.088	13661.096	95.880

SETTING-OUT POINTS

NAME #	X	Y	ELEVATION
p 260	3756670.676	13731.782	95.750
p 261	3756669.365	13731.289	95.781
p 262	3756664.715	13729.451	95.890
p 263	3756660.114	13727.495	95.968
p 264	3756655.565	13725.420	96.046
p 265	3756651.071	13723.228	96.084
p 266	3756646.635	13720.922	96.122
p 267	3756642.260	13718.501	96.160
p 268	3756639.157	13716.694	96.187
p 269	3756633.649	13713.417	96.236
p 270	3756629.352	13710.860	96.258
p 271	3756625.055	13708.304	96.279
p 272	3756620.758	13705.747	96.301
p 273	3756616.461	13703.191	96.305
p 274	3756612.164	13700.634	96.310
p 275	3756607.867	13698.078	96.314
p 276	3756603.570	13695.521	96.300
p 277	3756599.273	13692.965	96.286
p 278	3756594.976	13690.408	96.271
p 279	3756590.679	13687.852	96.257
p 280	3756586.382	13685.295	96.231
p 281	3756583.174	13683.387	96.211
p 282	3756577.649	13680.428	96.179
p 283	3756573.973	13678.460	96.157
p 284	3756568.419	13675.486	96.127

SETTING-OUT POINTS

NAME #	X	Y	ELEVATION
p 285	3756564.428	13673.344	96.106
p 286	3756562.498	13672.317	96.095
p 287	3756560.002	13671.024	96.082
p 288	3756555.476	13668.901	96.059
p 289	3756550.850	13667.006	96.035
p 290	3756546.135	13665.345	96.012
p 291	3756541.342	13663.921	95.988
p 292	3756534.488	13662.327	95.955
p 293	3756541.363	13663.757	95.954
p 294	3756546.202	13664.932	95.976
p 295	3756551.011	13666.242	96.021
p 296	3756555.783	13667.685	96.053
p 297	3756556.470	13667.905	96.061
p 298	3756560.520	13669.264	96.060
p 299	3756565.220	13670.975	96.054
p 300	3756569.447	13672.641	96.042
p 301	3756575.336	13675.176	96.097
p 302	3756579.213	13676.969	96.108
p 303	3756584.974	13679.853	96.126
p 304	3756587.061	13680.962	96.135
p 305	3756588.354	13681.681	96.157
p 306	3756592.848	13684.178	96.193
p 307	3756597.234	13686.616	96.213
p 308	3756601.607	13689.045	96.227
p 309	3756604.280	13690.531	96.222

SETTING-OUT POINTS

NAME #	X	Y	ELEVATION
p 310	3756605.955	13691.516	96.228
p 311	3756610.265	13694.051	96.244
p 312	3756614.575	13696.586	96.240
p 313	3756618.884	13699.121	96.245
p 314	3756623.194	13701.656	96.230
p 315	3756627.504	13704.191	96.208
p 316	3756631.814	13706.726	96.174
p 317	3756636.124	13709.260	96.139
p 318	3756641.648	13712.509	96.092
p 319	3756644.617	13714.256	96.062
p 320	3756644.776	13714.349	96.061
p 321	3756648.859	13716.687	96.038
p 322	3756653.174	13719.021	95.998
p 323	3756657.546	13721.249	95.954
p 324	3756661.973	13723.370	95.902
p 325	3756666.452	13725.382	95.846
p 326	3756670.980	13727.285	95.792
p 327	3756675.474	13729.045	95.736
p 328	3756680.056	13730.713	95.687
p 329	3756684.694	13732.274	95.639
p 330	3756689.362	13733.719	95.584
p 331	3756694.082	13735.055	95.550
p 332	3756698.794	13736.264	95.529
p 333	3756701.224	13736.841	95.514
p 334	3756705.912	13737.863	95.467

SETTING-OUT POINTS

NAME #	X	Y	ELEVATION
p 386	3756715.708	13728.592	95.235
p 387	3756713.812	13728.374	95.231
p 388	3756711.325	13728.055	95.237
p 389	3756710.193	13727.898	95.244
p 390	3756705.178	13727.103	95.304
p 391	3756703.337	13726.772	95.305
p 392	3756699.225	13725.955	95.331
p 393	3756694.521	13724.888	95.381
p 394	3756693.013	13724.516	95.395
p 395	3756688.423	13723.290	95.428
p 396	3756683.122	13721.698	95.481
p 397	3756677.779	13719.897	95.550
p 398	3756675.137	13718.931	95.580
p 399	3756675.240	13718.649	95.572
p 400	3756675.423	13718.698	95.573
p 401	3756676.392	13718.310	95.569
p 402	3756676.538	13717.395	95.645
p 403	3756679.318	13714.717	95.582
p 404	3756680.739	13713.337	95.553
p 405	3756685.229	13717.214	95.658
p 406	3756687.354	13718.526	95.679
p 407	3756687.777	13718.489	95.682
p 408	3756688.007	13718.192	95.685
p 409	3756688.645	13717.813	95.667
p 410	3756690.669	13716.633	95.608

SETTING-OUT POINTS

NAME #	X	Y	ELEVATION
p 411	3756691.741	13716.008	95.576
p 412	3756692.689	13715.455	95.549
p 413	3756694.270	13714.533	95.518
p 414	3756696.758	13713.083	95.446
p 415	3756697.466	13712.670	95.426
p 416	3756699.648	13716.413	95.378
p 417	3756700.873	13718.513	95.362
p 418	3756701.650	13719.742	95.351
p 419	3756703.326	13721.865	95.332
p 420	3756705.273	13723.742	95.312
p 421	3756707.174	13725.158	95.295
p 422	3756708.269	13725.828	95.285
p 423	3756710.337	13726.850	95.269
p 424	3756711.411	13727.270	95.260
p 425	3756713.482	13727.887	95.245
p 426	3756715.729	13728.293	95.228

SETTING-OUT POINTS

NAME #	X	Y	ELEVATION
p 427	3756648.317	13622.638	97.068
p 428	3756648.344	13626.471	97.053
p 429	3756647.016	13623.044	97.071
p 430	3756645.336	13621.726	97.081
p 431	3756642.849	13621.130	97.093
p 432	3756641.343	13621.129	97.059
p 433	3756638.596	13621.826	96.993
p 434	3756636.458	13623.841	96.925
p 435	3756635.655	13627.742	96.802
p 436	3756634.936	13622.403	96.873
p 437	3756634.409	13618.492	96.955
p 438	3756633.905	13614.755	97.034
p 439	3756633.252	13609.913	97.140
p 440	3756634.466	13612.546	97.150
p 441	3756635.919	13613.811	97.188
p 442	3756638.253	13614.847	97.240
p 443	3756640.505	13615.065	97.285
p 444	3756642.679	13614.618	97.189
p 445	3756643.630	13614.173	97.181
p 446	3756646.074	13612.480	97.159
p 447	3756647.847	13610.395	97.139
p 448	3756648.327	13608.770	97.127
p 449	3756648.325	13612.199	97.111
p 450	3756648.322	13615.929	97.095
p 451	3756648.320	13618.659	97.084

SETTING-OUT POINTS

NAME #	X	Y	ELEVATION
p 452	3756655.719	13619.953	0.000
p 453	3756659.026	13626.815	0.000
p 454	3756659.319	13627.939	96.924
p 455	3756659.665	13631.674	96.859
p 456	3756660.383	13636.047	96.782
p 457	3756660.340	13637.428	96.751
p 458	3756658.719	13643.441	96.597
p 459	3756632.286	13597.935	97.272
p 460	3756631.900	13600.981	97.315
p 461	3756632.493	13604.912	97.240
p 463	3756629.321	13610.509	97.186
p 464	3756627.806	13604.298	97.294
p 465	3756625.157	13608.060	97.155
p 466	3756625.618	13611.072	97.125
p 467	3756626.594	13617.459	97.104
p 468	3756626.279	13616.301	97.094
p 469	3756625.705	13614.936	97.084
p 470	3756624.753	13613.424	97.069
p 471	3756623.547	13612.106	97.055
p 472	3756622.125	13611.024	97.040
p 473	3756620.534	13610.212	97.024
p 474	3756618.823	13609.696	97.010
p 475	3756617.048	13609.493	96.995
p 476	3756615.265	13609.609	96.981
p 477	3756626.502	13606.151	97.231

SETTING-OUT POINTS

NAME #	X	Y	ELEVATION
p 478	3756629.399	13602.035	97.276
p 479	3756629.923	13613.686	97.120
p 480	3756626.073	13614.050	97.109
p 484	3756655.808	13627.841	96.843
p 485	3756656.192	13632.109	96.777
p 486	3756657.029	13637.105	96.698

NOTES / LEGEND

- EX. ROADWAY / EX. ROAD MARKINGS
- NEW PROPOSED ROAD MARKINGS
- EXISTING BUILDING LINES
- NEW TRAFFIC ISLAND / LANDSCAPING
- NEW PROPOSED MEDIAN CLOSURES (INTERSECTION CHANGE TO LEFT-IN & LEFT-OUT OPERATION)

0 10 50 100

NOTE:
- ALL 115 DRAWINGS TO BE READ IN-CONJUCTION WITH THE 111 DRAWINGS AND SHOULD BE VERIFIED ON SITE BY THE CONTRACTOR
- CONTOURS REPRESENT DESIGN LEVELS

APPROVED BY COUNCIL / CLIENT

CITY ENGINEER / CLIENT — REG. NO. — DATE

AMENDMENTS CODE

A,B,C... / : BEFORE TENDER
T0 / : TENDER DRAWING
0,1,2,3...! / : AFTER TENDER
Z / : AS BUILT

/A : BY CLIENT
/B : BY ARCHITECT
/C : BY MECHANICAL OR ELECTRICAL
/D : BY BVi
/E : BY OTHER ( )

DATE	INITIAL	No./CODE	REVISION DESCRIPTION
20/07/2024	FMG	T0/D	ISSUED FOR TENDER
12/02/2026	FMG	T0/D	ISSUED FOR TENDER

CLIENT

STELLENBOSCH
STELLENBOSCH • PNIEL • FRANSCHHOEK
MUNICIPALITY • UMASIPALA • MUNISIPALITEIT

bvi | 50 YEAR CELEBRATION EST 1967-2017
• ENGINEERING • PROCUREMENT • MANAGEMENT
ISO 9001 Registered — UKAS — CESA Consulting Engineers South Africa
Registration no. 1998/000157/07

PROVINCE	OFFICE	☎	E-MAIL
Gauteng	Pretoria	(012) 940-1111	pta@bvigp.co.za
	Polokwane	(015) 291-5400	js@bvilp.co.za
Free State	Bloemfontein	(051) 447-2137	bfn@bvifs.co.za
	Welkom	(057) 353-2499	wel@bvifs.co.za
Northern Cape	Upington	(054) 337-6600	upt@bvinc.co.za
	Springbok	(027) 712-3614	spk@bvinc.co.za
KwaZulu Natal	Durban	(031) 266-8382	dbn@bvikn.co.za
	Empangeni	(035) 772-6112	emp@bvikn.co.za
Eastern Cape	Port Elizabeth	(041) 373-4343	bviec@mweb.co.za
	East London	(043) 735-3889	Bk@bviec.co.za
Western Cape	Cape Town	(021) 527-7000	cpt@bviwc.co.za

Visit or contact us online at www.bvigroup.co.za

PROJECT

REALIGNMENT OF THE R44/R310 AND ALEXANDER STREET JUNCTION

DRAWING TITLE

ADAM TAS SETTING-OUT POINTS (SHEET 2 OF 3) - PHASE 1

APPROVED BY BVi

ENGINEER/TECHNOLOGIST — REG. NO. — DATE

SCALE	1:250 @ A0	DRAWN	JAS
DESIGNED	FMG	CHECKED	LP
PLAN NUMBER		REVISION NO.	DATE SAVED
34092.00-115-02		T1	12 February 2026

O:\PROJECTS DRAWINGS\34000 - 34999\34092.00\CIVIL\TENDER DRAWINGS\REVT1\34092.00-115-01, 02 & 03 REVT1_(ROAD SETTING-OUT LAYOUT).DWG

34092.00-115-01, 02 & 03 REVT1_(ROAD SETTING-OUT LAYOUT).DWG

Thursday, 12 February 2026 16:41:12

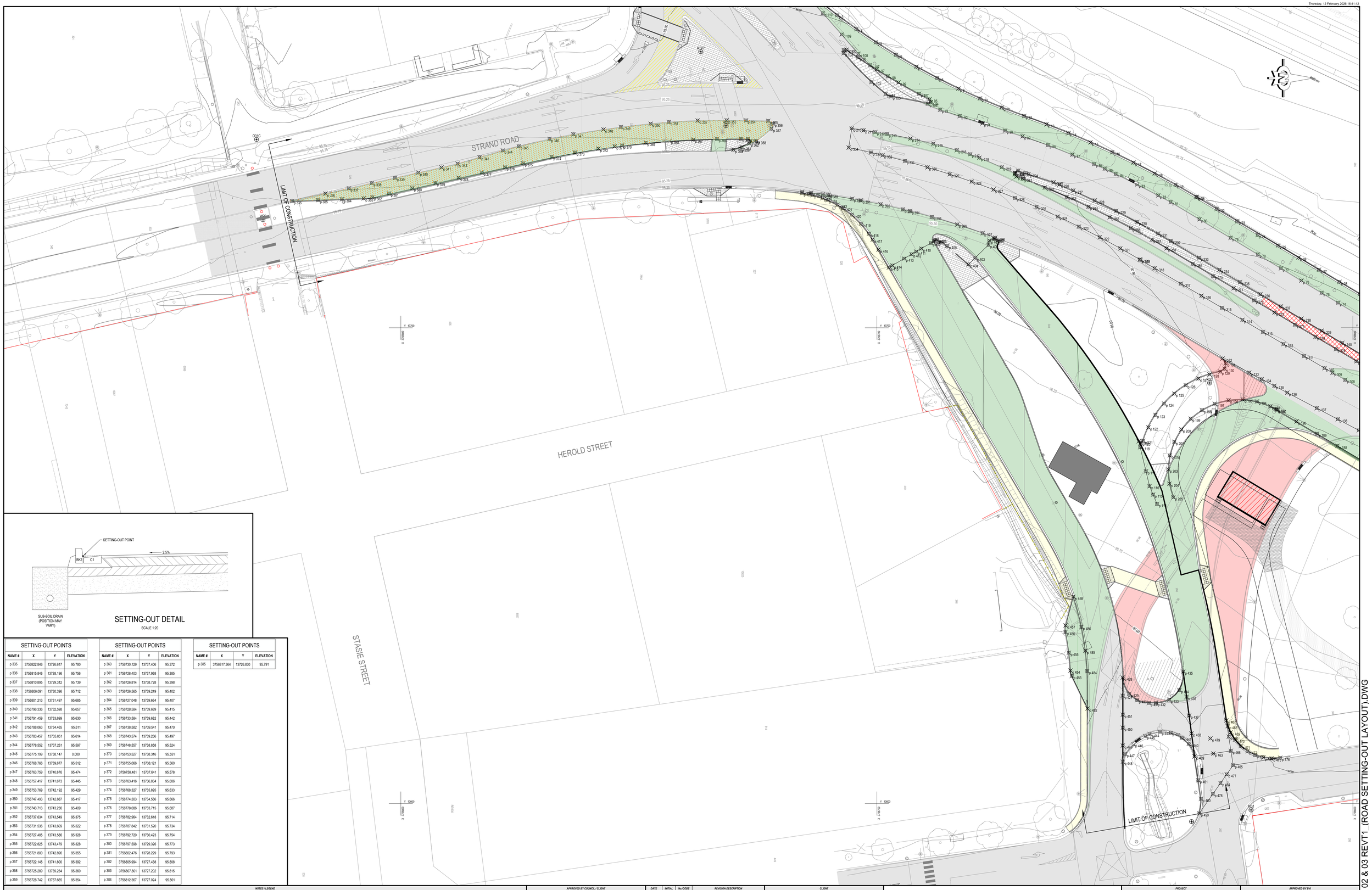

SETTING-OUT POINTS			
NAME #	X	Y	ELEVATION
p 335	3756822.846	13726.617	95.780
p 336	3756815.846	13728.196	95.756
p 337	3756810.895	13729.312	95.739
p 338	3756806.091	13730.396	95.712
p 339	3756801.213	13731.497	95.685
p 340	3756796.336	13732.598	95.657
p 341	3756791.459	13733.699	95.630
p 342	3756788.063	13734.465	95.611
p 343	3756783.457	13735.851	95.614
p 344	3756778.552	13737.261	95.597
p 345	3756775.199	13738.147	0.000
p 346	3756768.766	13739.677	95.512
p 347	3756763.759	13740.676	95.474
p 348	3756757.417	13741.673	95.445
p 349	3756753.769	13742.192	95.429
p 350	3756747.493	13742.887	95.417
p 351	3756743.713	13743.236	95.409
p 352	3756737.634	13743.549	95.375
p 353	3756731.536	13743.609	95.322
p 354	3756727.485	13743.586	95.328
p 355	3756722.825	13743.479	95.328
p 356	3756721.800	13742.896	95.355
p 357	3756722.145	13741.800	95.392
p 358	3756725.289	13739.234	95.360
p 359	3756728.742	13737.665	95.354

SETTING-OUT POINTS			
NAME #	X	Y	ELEVATION
p 360	3756730.129	13737.406	95.372
p 361	3756728.403	13737.968	95.385
p 362	3756726.814	13738.728	95.398
p 363	3756726.565	13739.249	95.402
p 364	3756727.048	13739.664	95.407
p 365	3756728.584	13739.689	95.415
p 366	3756733.584	13739.682	95.442
p 367	3756738.582	13739.541	95.470
p 368	3756743.574	13739.266	95.497
p 369	3756748.557	13738.858	95.524
p 370	3756753.527	13738.316	95.551
p 371	3756755.066	13738.121	95.560
p 372	3756758.481	13737.641	95.578
p 373	3756763.416	13736.834	95.606
p 374	3756768.327	13735.895	95.633
p 375	3756774.303	13734.566	95.666
p 376	3756778.086	13733.715	95.687
p 377	3756782.964	13732.618	95.714
p 378	3756787.842	13731.520	95.734
p 379	3756792.720	13730.423	95.754
p 380	3756797.598	13729.326	95.773
p 381	3756802.476	13728.229	95.793
p 382	3756805.994	13727.438	95.808
p 383	3756807.801	13727.202	95.815
p 384	3756812.367	13727.024	95.801

SETTING-OUT POINTS			
NAME #	X	Y	ELEVATION
p 385	3756817.364	13726.830	95.791

NOTES / LEGEND

- EX. ROADWAY / EX. ROAD MARKINGS
- NEW PROPOSED ROAD MARKINGS
- EXISTING BUILDING LINES
- NEW TRAFFIC ISLAND / LANDSCAPING
- NEW PROPOSED MEDIAN CLOSURES (INTERSECTION CHANGE TO LEFT-IN & LEFT-OUT OPERATION)

NOTE:
- ALL 115 DRAWINGS TO BE READ IN-CONJUCTION WITH THE 111 DRAWINGS AND SHOULD BE VERIFIED ON SITE BY THE CONTRACTOR
- CONTOURS REPRESENT DESIGN LEVELS

APPROVED BY COUNCIL / CLIENT

CITY ENGINEER / CLIENT | REG. NO. | DATE

AMENDMENTS CODE

A,B,C... / 1 BEFORE TENDER
T0 / T TENDER DRAWING
0,1,2,3... / 1 AFTER TENDER
2 / AS BUILT
A: BY CLIENT
B: BY ARCHITECT
C: BY MECHANICAL OR ELECTRICAL
D: BY BA
E: BY OTHERS ( )

DATE	INITIAL	No./CODE	REVISION DESCRIPTION
20/07/2024	FMG	T0/D	ISSUED FOR TENDER
12/02/2026	FMG	T0/D	ISSUED FOR TENDER

CLIENT

STELLENBOSCH
UNIVERSITY • SUN • iYUNIVESITHI
MUNICIPALITY • UMASIPALA • MUNISIPALITEIT

bvi 50 YEAR CELEBRATION EST 1967-2017
• ENGINEERING • PROCUREMENT • MANAGEMENT
Reputation no. 1998/001/0107

PROVINCE	OFFICE	TEL	E-MAIL
Gauteng	Pretoria	(012) 940-1111	pta@bvi.co.za
	Polokwane	(015) 291-0400	plk@bvi.co.za
Free State	Bloemfontein	(051) 447-2121	bfn@bvi.co.za
	Welkom	(057) 352-2436	wel@bvi.co.za
Northern Cape	Upington	(054) 331-0600	upt@bvi.co.za
	Springbok	(027) 712-8114	spb@bvi.co.za
KwaZulu-Natal	Durban	(031) 266-8262	dbn@bvi.co.za
	Empangeni	(035) 772-6112	emp@bvi.co.za
Eastern Cape	Port Elizabeth	(041) 373-0400	bee@bvi.co.za
	East London	(043) 726-2800	bl@bvi.co.za
Western Cape	Cape Town	(021) 527-7000	capt@bvi.co.za

Visit or contact us online at www.bvigroup.co.za

PROJECT

REALIGNMENT OF THE R44/R310 AND ALEXANDER STREET JUNCTION

DRAWING TITLE

ADAM TAS SETTING-OUT POINTS (SHEET 3 OF 3) - PHASE 1

APPROVED BY BVI

ENGINEER/TECHNOLOGIST | REG. NO. | DATE

SCALE	1:250 @ A0	DRAWN	JAS
DESIGNED	FMG	CHECKED	LP

PLAN NUMBER	REVISION NO.	DATE SAVED
34092.00-115-03	T1	12 February 2026

34092.00-115-01, 02 & 03 REVT1_(ROAD SETTING-OUT LAYOUT).DWG

O:\PROJECTS DRAWINGS\34000 - 34999\34092.00\CIVIL\TENDER DRAWINGS\REVT1\34092.00-115-01, 02 & 03 REVT1_(ROAD SETTING-OUT LAYOUT).DWG

0 10 50 100

Thursday, 12 February 2026 16:47:55

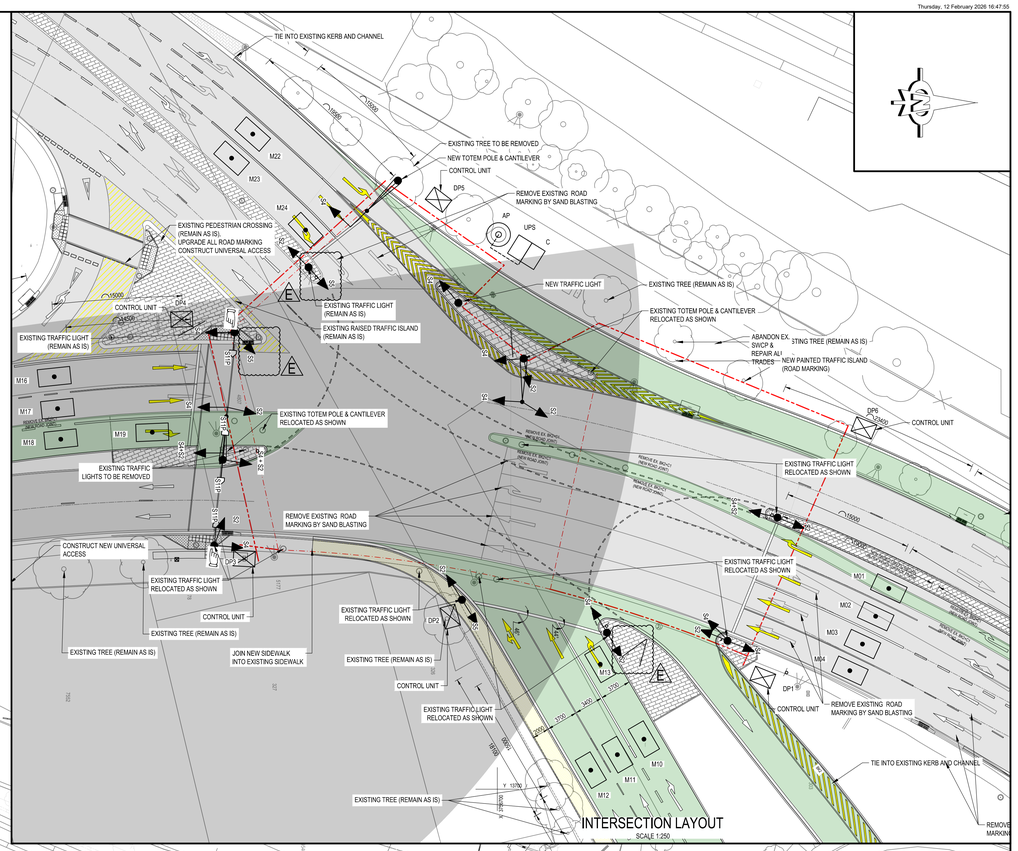

TRAFFIC VOLUMES

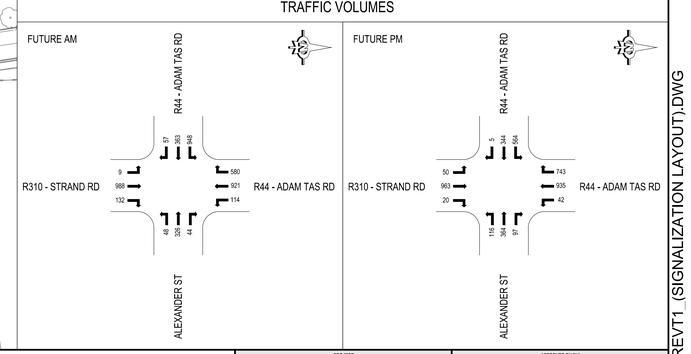

GENERAL NOTES:

1. ALL SIGNALS WILL BE MAINTAINED BY STELLENBOSCH MUNICIPALITY IN COLLABORATION WITH WCG, CONSULTANT PROVIDES ALL DESIGN DETAILS.
2. A MOVAC 4, 12 PHASE CONTROLLER MUST BE USED.
3. ALL CONTROLLERS MUST BE EQUIPPED WITH A GPRS MODEM AND PROVISION IN THE FORM OF A GLANDED PVC PIPE MUST BE FOR THE FUTURE INSTALLATION OF A FIXED ADSL LINE.
4. TIMING PLANS FOR INCLUSION IN A.T.C SYSTEM TO BE SUPPLIED BY CONSULTANT.
5. BPC ACCESSIBLE PEDESTRIAN SIGNAL PUSH BUTTONS MUST BE INSTALLED.
6. DIPPED KERBS WITH TACTILE PAVERS MUST BE INSTALLED FOR PEDESTRIAN PHASES.
7. A DUAT 811 AUDIO TACTILE CONTROLLER MUST BE INSTALLED FOR EACH PEDESTRIAN PHASE.
8. CONTRACTOR TO NOTIFY THE ENGINEER IF DRAINAGE STRUCTURES CONFLICT WITH THE PROPOSED POSITIONS OF PEDESTRIAN CROSSINGS, WHEEL CHAIR RAMPS AND DROPPED KERBS.
9. EXACT POSITIONS OF DUCTS AND SIGNAL POLES WILL BE DETERMINED ON SITE.
10. SEPARATE EARTH WIRE WITH ALL CABLES.
11. NO POLES CAN BE INSTALLED BEFORE KERBS ARE IN PLACE AND FINAL ROAD MARKING POSITIONS ARE INDICATED.
12. NO JOINTS ARE ALLOWED TO BE MADE ON CABLES.
13. CABLES UNDER ROAD SURFACES MUST BE HOUSED IN CONTINUOUS 110mm PVC DUCTS.
14. NEW CABLES MUST BE TERMINATED IN CONNECTION PILLARS.
15. ALL CABLES UNDER PAVED SURFACES MUST BE DUCTED.
16. T.S.A. 220 VOLT L.E.D. LANTERNS WITH RETRO-REFLECTIVE ROUNDED BACKING SCREENS MUST BE USED AS SPECIFIED IN THE METSPEC.
17. T.S.A. OR SYNTELL 220 VOLT L.E.D. ASPECTS MUST BE USED ON 210mm LANTERNS.
18. LANTERNS MUST BE MOUNTED WITH TRAFFIC SIGNAL CLAMP MOUNTING KITS.
19. LAWULA OR ROBOTECH POLYETHYLENE TRAFFIC SIGNAL STUBBIES MUST BE USED.
20. NO EXISTING OR USED MATERIALS MAY BE RE-USED WITHOUT CONSENT OF THE PROJECT CO-ORDINATOR.
21. ALL MATERIALS USED AND ALL CONSTRUCTION MUST COMPLY WITH THE METROPOLITAN SPECIFICATIONS, SARTSM AND SANS 10142 STANDARDS.
22. THE CONTRACTOR WILL BE RESPONSIBLE FOR SAFE TRAFFIC ACCOMMODATION DURING THE CONSTRUCTION PERIOD AND UNTIL THE SIGNALS ARE COMMISSIONED AND ACCEPTED BY WCG (Design Office and DRE).
23. ALL TRAFFIC SIGNAL FAULTS THAT OCCUR DURING THE CONSTRUCTION PERIOD MUST BE ATTENDED TO BY THE SIGNAL CONTRACTOR.
24. ALL DETECTOR LOOPS MUST BE WORKING DURING CONSTRUCTION PERIOD.
25. THE TRAFFIC SIGNALS WILL NOT BE COMMISSIONED UNLESS DETAILED AS BUILT DRAWINGS, INCLUDING CABLE RUNS AND CORE ALLOCATIONS, ELECTRICAL CERTIFICATES OF COMPLIANCE HAVE BEEN SUPPLIED/ISSUED AND A FINAL INSPECTION BY WCG (Design Office and DRE) HAS BEEN COMPLETED.
26. SIGHT LINES TO ALL TRAFFIC POLES TO BE CHECKED ON SITE. ALL VEGETATION WHICH OBSTRUCTS THE TRAFFIC POLES SHALL BE REMOVED.
27. THE REMOVAL OF EXISTING ROAD MARKINGS SHALL BE COMPLETED BY MEANS OF SANDBLASTING. REFER TO THE LAYOUT DRAWING FOR ROAD MARKINGS WHICH REQUIRE REMOVAL.
28. FINAL DETECTION POSITIONS SHALL BE DETERMINED ON SITE BY THE RESPONSIBLE ANALYST.
29. CHECK THAT ROAD SIGNS ARE CLEARLY VISIBLE TO ALL ROAD USERS.
30. TRAFFIC SIGNAL FACE MODULES:



DETECTION ITEM DETAILS:

1.	CONTROLLER - ULTRA SECURE TITANIC BOX WITH UPS AND 8 BATTERIES(LITHIUM IRON)	1
2.	DISTRIBUTION PILLARS	4
3.	CANTILEVER PILLARS	4
4.	ACCESS POINT WITH BOX	1
5.	REPEATERS	4
6.	MAGNETOMETERS - INCLUDING COVERS AND EPOXY RESIN AND TUBE	8
7.	3G ROUTER WITH ETHERNET	1

SIGNAL FACE MODULES
(LARGE UNIT SIZE, HIGH-INTENSITY, ROBUST LED LED SIGNAL HEADS, 300mm DIA.):

1.	S1 (LED OPTICS) WITH BACKGROUND SCREEN	7
2.	S2 (LED OPTICS) WITH BACKGROUND SCREEN	7
3.	S3 (LED OPTICS) WITH BACKGROUND SCREEN	2
4.	S4 (LED OPTICS) WITH BACKGROUND SCREEN	6
5.	S5 (LED OPTICS) WITH BACKGROUND SCREEN	3
6.	S8 (LED OPTICS) WITH BACKGROUND SCREEN	4
7.	S9 (LED OPTICS) WITH BACKGROUND SCREEN	0
8.	S10L (LED OPTICS) WITH BACKGROUND SCREEN	0
9.	S10R (LED OPTICS) WITH BACKGROUND SCREEN	1
10.	S11P (LED OPTICS) WITH BACKGROUND SCREEN	4
11.	S12 (LED OPTICS) WITH BACKGROUND SCREEN	0

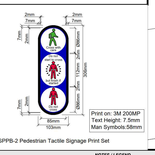

SPPB-2 Pedestrian Tactile Signage Print Set

NOTES / LEGEND

- NEW TRAFFIC ISLAND / LANDSCAPING
- NEW PROPOSED MEDIAN CLOSURES (INTERSECTION CHANGE TO LEFT-IN & LEFT-OUT OPERATION)
- NEW PROPOSED SUSPENDED BRIDGE (BRIDGE-OVER-ROAD & BRIDGE-OVER-RAIL)
- EXISTING ROAD SECTIONS TO BE REMOVED.
- EXISTING ROADWAY TO REMAIN IN PLACE.
- NEW ROAD SECTIONS TO BE ADDED TO EXISTING ROADWAY.
- NEW SIDEWALK SECTIONS TO BE ADDED TO EXISTING SIDEWALKS.
- EX. ROADWAY / EX. ROAD MARKINGS
- NEW PROPOSED ROAD MARKINGS
- EXISTING BUILDING LINES
- SIGNAL DETECTION EXTENT
- NEW REPEATER
- NEW SIGNAL DISTRIBUTION PILLAR
- NEW ACCESS POINT
- NEW CONTROLLER POSITION (C) WITH UPS
- VEHICLE ASPECT
- PEDESTRIAN ASPECT
- TRAFFIC SIGNAL POST WITH OVERHEAD MOUNTING
- TRAFFIC SIGNAL POST
- PEDESTRIAN PUSH BUTTON
- NEW PEDESTRIAN CROSSING
- NEW TRAFFIC SIGN BOARD
- NEW MAGNETOMETER
- NEW TRAFFIC SIGN
- EXISTING LAMP POST
- EXISTING TRAFFIC SIGN
- EXISTING TRAFFIC SIGN BOARD
- EXISTING TRAFFIC LIGHT
- EXISTING ELECTRICAL KIOSK

0 10 50 100

APPROVED BY COUNCIL / CLIENT

CITY ENGINEER / CLIENT | REG. NO. | DATE

AMENDMENTS CODE

A,B,C... / : BEFORE TENDER
T0 / : TENDER DRAWING
1,1.2,1... AFTER TENDER
2 / : AS BUILT

A: BY CLIENT
B: BY ARCHITECT
C: BY MECHANICAL OR ELECTRICAL
D: BY IM
E: BY OTHER ( )

DATE	INITIAL	No./CODE	REVISION DESCRIPTION
20/07/2024	FMG	T0/0	ISSUED FOR TENDER
12/02/2026	FMG	T1/D	ISSUED FOR TENDER

CLIENT

STELLENBOSCH
MUNICIPALITY • UMASIPALA • MUNISIPALITEIT

ISO 9001 ISO 14001 ISO 45001 CESA
bvi 50 YEARS CELEBRATION EST 1967-2017
• ENGINEERING • PROCUREMENT • MANAGEMENT
Registration No. 1968/003167/07

PROVINCE	OFFICE	TEL	E-MAIL
Gauteng	Pretoria	(012) 940-1111	pta@bvi.co.za
	Polokwane	(015) 291-5600	plk@bvi.co.za
Free State	Bloemfontein	(051) 447-2121	bfn@bvi.co.za
	Welkom	(057) 353-0456	wel@bvi.co.za
Northern Cape	Upington	(054) 331-6830	upt@bvi.co.za
	Springbok	(027) 712-8014	spb@bvi.co.za
KwaZulu-Natal	Durban	(031) 266-8362	drb@bvi.co.za
	Empangeni	(035) 772-6113	emp@bvi.co.za
Eastern Cape	Port Elizabeth	(041) 373-4243	hseo@bvi.co.za
	East London	(043) 726-3089	bp@bvi.co.za
Western Cape	Cape Town	(021) 527-7000	cpt@bvi.co.za

Visit our centers on-shore at www.bvigroup.co.za

PROJECT

REALIGNMENT OF THE R44/R310 AND ALEXANDER STREET JUNCTION

DRAWING TITLE

SIGNALIZATION LAYOUT - PHASE 1

APPROVED BY/ BVI

ENGINEER/TECHNOLOGIST | REG. NO. | DATE

SCALE	1:200 @ A0	DRAWN	JAS
DESIGNED	FMG	CHECKED	LP

PLAN NUMBER	REVISION NO.	DATE SAVED
34092.00-117-01	T1	12 February 2026

O:\PROJECTS DRAWINGS\34000 - 34999\34092.00\CIVIL\TENDER DRAWINGS\REVT1\34092.00-117-01 REVT1_(SIGNALIZATION LAYOUT).DWG

34092.00-117-01 REVT1_(SIGNALIZATION LAYOUT).DWG

Thursday, 12 February 2026 16:50:27

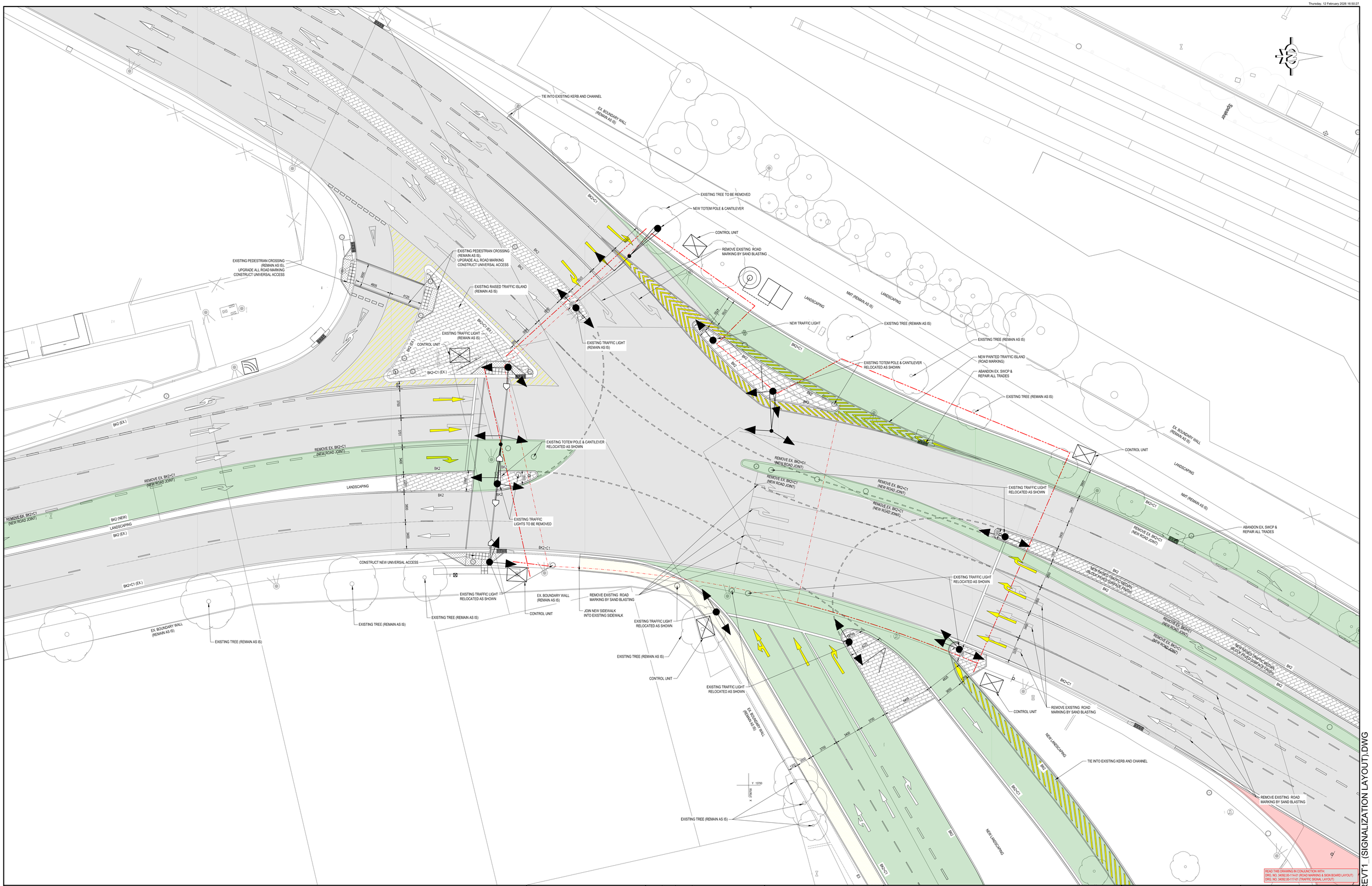

NOTES / LEGEND

- NEW TRAFFIC ISLAND / LANDSCAPING
- NEW PROPOSED MEDIAN CLOSURES (INTERSECTION CHANGE TO LEFT-IN & LEFT-OUT OPERATION)
- NEW PROPOSED SUSPENDED BRIDGE (BRIDGE-OVER-ROAD & BRIDGE-OVER-RAIL)
- EXISTING ROAD SECTIONS TO BE REMOVED.
- EXISTING ROADWAY TO REMAIN IN PLACE.
- NEW ROAD SECTIONS TO BE ADDED TO EXISTING ROADWAY.
- NEW SIDEWALK SECTIONS TO BE ADDED TO EXISTING SIDEWALKS.
- EX. ROADWAY / EX. ROAD MARKINGS
- NEW PROPOSED ROAD MARKINGS
- EXISTING BUILDING LINES
- SIGNAL DETECTION EXTENT
- NEW REPEATER
- NEW SIGNAL DISTRIBUTION PILLAR
- NEW ACCESS POINT
- NEW CONTROLLER POSITION (C) WITH UPS
- VEHICLE ASPECT
- PEDESTRIAN ASPECT
- TRAFFIC SIGNAL POST WITH OVERHEAD MOUNTING
- TRAFFIC SIGNAL POST
- PEDESTRIAN PUSH BUTTON
- NEW PEDESTRIAN CROSSING
- NEW TRAFFIC SIGN BOARD
- NEW MAGNETOMETER
- NEW TRAFFIC SIGN
- EXISTING LAMP POST
- EXISTING TRAFFIC SIGN
- EXISTING TRAFFIC SIGN BOARD
- EXISTING TRAFFIC LIGHT
- EXISTING ELECTRICAL KIOSK

0 10 50 100

APPROVED BY COUNCIL / CLIENT

CITY ENGINEER / CLIENT — REG. NO. — DATE

AMENDMENTS CODE

A,B,C... // BEFORE TENDER
T0 // TENDER DRAWING
1,1.2,3... AFTER TENDER
2 // AS BUILT

A- BY CLIENT
B- BY ARCHITECT
C- BY MECHANICAL OR ELECTRICAL
D- BY BH
E- BY OTHER ( )

DATE	INITIAL	No./CODE	REVISION DESCRIPTION
20/07/2024	FMG	T0/D	ISSUED FOR TENDER
12/02/2026	FMG	T1/D	ISSUED FOR TENDER

CLIENT

STELLENBOSCH MUNICIPALITY • UMASIPALA • MUNISIPALITEIT

bvi 50 YEARS CELEBRATION EST 1967-2017 | CESA
• ENGINEERING • PROCUREMENT • MANAGEMENT
Registration No. 1998/003150/07

PROVINCE	OFFICE		E-MAIL
Gauteng	Pretoria	(012) 940-1111	pta@bvi.co.za
	Polokwane	(015) 291-5400	plk@bvi.co.za
Free State	Bloemfontein	(051) 447-2121	bfn@bvi.co.za
	Welkom	(057) 353-0400	wel@bvi.co.za
Northern Cape	Upington	(054) 337-8000	upt@bvi.co.za
	Springbok	(027) 712-8014	spb@bvi.co.za
KwaZulu Natal	Durban	(031) 266-9352	dbn@bvi.co.za
	Empangeni	(035) 772-6112	emp@bvi.co.za
Eastern Cape	Port Elizabeth	(041) 373-6400	hws@hwtb.co.za
	East London	(043) 726-9000	bg@hwtb.co.za
Western Cape	Cape Town	(021) 527-7000	cpt@bvi.co.za

Visit us on-line at www.bvi.co.za

PROJECT

REALIGNMENT OF THE R44/R310 AND ALEXANDER STREET JUNCTION

DRAWING TITLE

DIMENSIONED INTERSECTION LAYOUT - PHASE 1

APPROVED BY BVI

ENGINEER/TECHNOLOGIST — REG. NO. — DATE

SCALE	1:150 @ A0	DRAWN	JAS
DESIGNED	FMG	CHECKED	LP

PLAN NUMBER	REVISION NO.	DATE SAVED
34092.00-117-02	T1	12 February 2026

O:\PROJECTS DRAWINGS\34000 - 34999\34092.00\CIVIL\TENDER DRAWINGS\REVT1\34092.00-117-01 REVT1_(SIGNALIZATION LAYOUT).DWG

34092.00-117-01 REVT1_(SIGNALIZATION LAYOUT).DWG

Thursday, February 12, 2026 5:57:32 PM

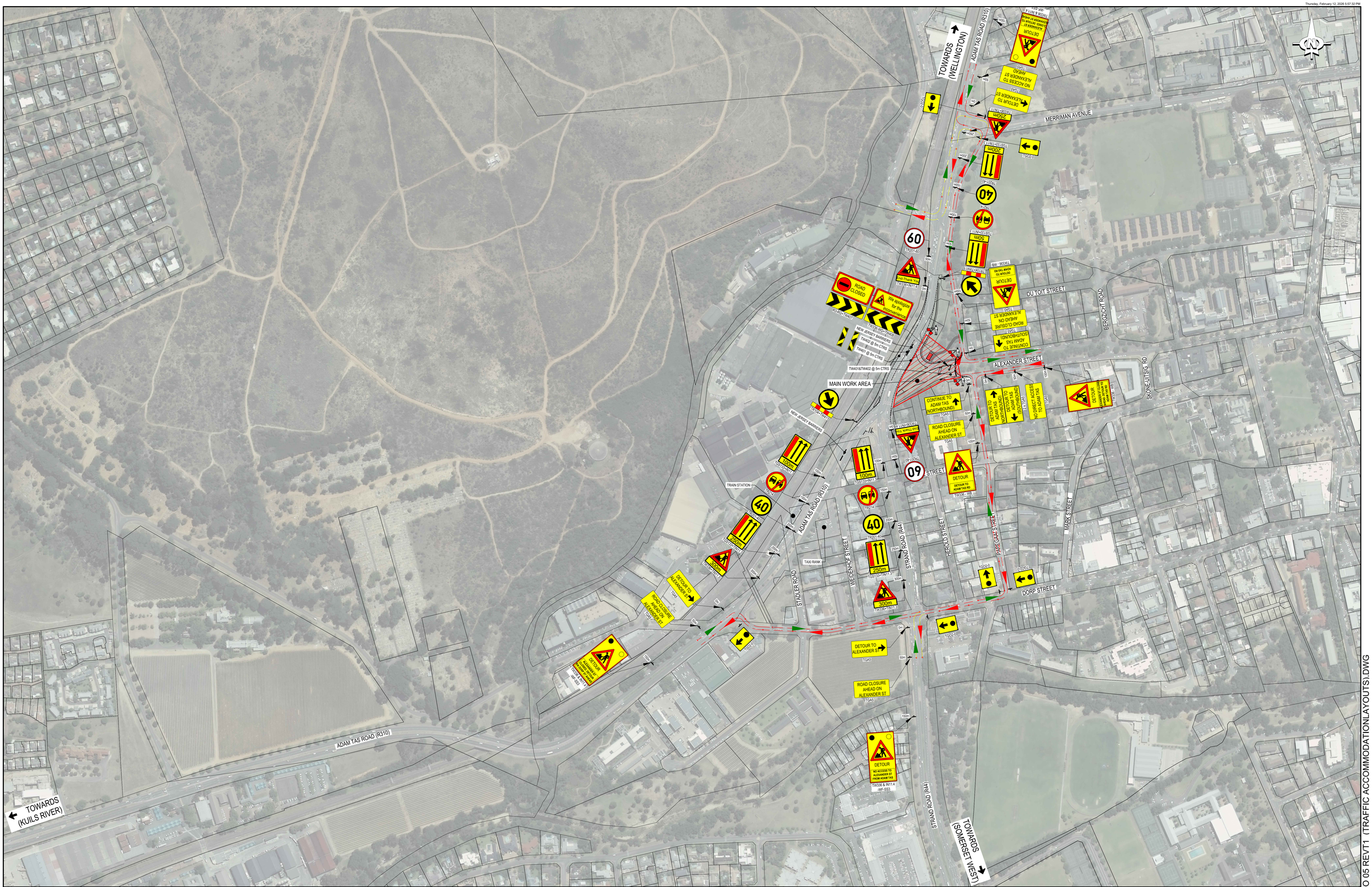

NOTES / LEGEND

THE TRAFFIC ACCOMMODATION IS BASED ON THE FOLLOWING METHODOLOGY:

1. ADAM TAS ROAD - CLASS 2 PEDI URBAN
   STRAND ROAD - CLASS 2 PEDI URBAN
   ALEXANDER STREET - CLASS 3 ACCESS COLLECTOR
2. DUE TO THE NATURE & FUNCTIONING OF THE CURRENT INTERSECTION THE METHODOLOGY SHALL BE CONSIDERED AS AN CLASS 4 ROAD NETWORK. THIS CLOSELY SPACED TEMPORARY ROAD SIGNAGE SPACING REQUIREMENTS WHICH ALLOWS FOR RANDOM CLOSELY SPACED LOCAL ACCESS DRIVEWAYS (INGRESS/EGRESS) TO RESIDENTIAL PROPERTIES AND/OR BUSINESS. WE THUS PROPOSE 50m c/c SPACING BETWEEN THE SIGNAGE BOARDS.
3. ALL ROAD CLOSURES SHALL BE WITH MOUNTABLE DELINEATORS TO CHANNEL TRAFFIC FLOW INTO SINGLE LANE CONFIGURATION.
4. ALL TEMPORARY LANE CLOSURE MECHANISMS & SIGNAGE SHALL BE ON HIGH VISIBLE BACKGROUND WITH AMBER FLICKERING LIGHTS FOR NIGHT TIME VISIBILITY.

APPROVED BY COUNCIL / CLIENT

CITY ENGINEER / CLIENT | REG. NO. | DATE

AMENDMENTS CODE

A,B,C... / REVISE TENDER
T0 / T1 / TENDER DRAWING
0,1,2,3... / AFTER TENDER
2 / AS BUILT

A: BY CLIENT
B: BY ARCHITECT
C: BY MECHANICAL OR ELECTRICAL
D: BY BH
E: BY OTHER ( )

DATE	INITIAL	No.-CODE	REVISION DESCRIPTION
12/02/2026	FMG	T1/D	ISSUED FOR TENDER

CLIENT

STELLENBOSCH
MUNICIPALITY • UMASIPALA • MUNISIPALITEIT

bvi 50 YEARS CELEBRATION EST 1967-2017
• ENGINEERING • PROCUREMENT • MANAGEMENT

CESA

PROVINCE	OFFICE	TEL	E-MAIL
Gauteng	Pretoria	(012) 940-1111	pta@bvi.co.za
	Polokwane	(015) 291-0400	plk@bvi.co.za
Free State	Bloemfontein	(051) 447-2121	bfn@bvi.co.za
	Welkom	(057) 352-0059	wel@bvi.co.za
Northern Cape	Upington	(054) 337-6830	upt@bvi.co.za
	Springbok	(027) 712-8114	spb@bvi.co.za
KwaZulu-Natal	Durban	(031) 266-6362	dbn@bvi.co.za
	Empangeni	(035) 772-6112	emp@bvi.co.za
Eastern Cape	Port Elizabeth	(041) 373-4042	hms@bvi.co.za
	East London	(043) 735-0650	lbl@bvi.co.za
Western Cape	Cape Town	(021) 527-7000	cpt@bvi.co.za

Visit or contact us online at www.bviprop.co.za

Registration no. 1998/003310/07

PROJECT

REALIGNMENT OF THE R44/R310 AND ALEXANDER STREET JUNCTION

DRAWING TITLE

TRAFFIC ACCOMMODATION LAYOUT - PHASE 1 (OVERVIEW)

APPROVED BY BVI

ENGINEER/TECHNOLOGIST | REG. NO. | DATE

SCALE	1:2000 @ A0	DRAWN	JAS
DESIGNED	FMG	CHECKED	LP

PLAN NUMBER	REVISION NO.	DATE SAVED
34092.00-119-01	T1	12 February 2026

34092.00-119-01 TO 05 REVT1 (TRAFFIC ACCOMMODATIONLAYOUTS).DWG

O:\PROJECTS DRAWINGS\34000 - 34999\34092.00\CIVIL\TENDER DRAWINGS\REVT1\34092.00-119-01 TO 05 REVT1_(TRAFFIC ACCOMMODATIONLAYOUTS).DWG

0 10 50 100

Thursday, February 12, 2026 6:00:03 PM



NOTES / LEGEND

THE TRAFFIC ACCOMMODATION IS BASED ON THE FOLLOWING METHODOLOGY:

1. ADAM TAS ROAD - CLASS 2 PEDI URBAN
   STRAND ROAD - CLASS 2 PEDI URBAN
   ALEXANDER STREET - CLASS 3 ACCESS COLLECTOR
2. DUE TO THE NATURE & FUNCTIONING OF THE CURRENT INTERSECTION THE METHODOLOGY SHALL BE CONSIDERED AS AN CLASS 4 ROAD NETWORK. THIS CLOSELY SPACED TEMPORARY ROAD SIGNAGE SPACING REQUIREMENTS WHICH ALLOWS FOR RANDOM CLOSELY SPACED LOCAL ACCESS DRIVEWAYS (INGRESS/EGRESS) TO RESIDENTIAL PROPERTIES AND/OR BUSINESS. WE THUS PROPOSE 50m c/c SPACING BETWEEN THE SIGNAGE BOARDS.
3. ALL ROAD CLOSURES SHALL BE WITH MOUNTABLE DELINEATORS TO CHANNEL TRAFFIC FLOW INTO SINGLE LANE CONFIGURATION.
4. ALL TEMPORARY LANE CLOSURE MECHANISMS & SIGNAGE SHALL BE ON HIGH VISIBLE BACKGROUND WITH AMBER FLICKERING LIGHTS FOR NIGHT TIME VISIBILITY.

0 10 50 100

APPROVED BY COUNCIL / CLIENT

CITY ENGINEER / CLIENT	REG. NO.	DATE

AMENDMENTS CODE

A.B.C... / : BEFORE TENDER
TD / : TENDER DRAWING
C.1.2.3... / AFTER TENDER
Z / : AS BUILT

A: BY CLIENT
B: BY ARCHITECT
C: BY MECHANICAL OR ELECTRICAL
D: BY BM
E: BY OTHER ( )

DATE	INITIAL	No./CODE	REVISION DESCRIPTION
12/02/2026	FMG	T1/D	ISSUED FOR TENDER

CLIENT

STELLENBOSCH
STELLENBOSCH • PNIEL • FRANSCHHOEK
MUNICIPALITY • UMASIPALA • MUNISIPALITEIT

Registration No. 1986/001017

CESA

bvi 50 YEAR CELEBRATION EST 1967-2017

• ENGINEERING • PROCUREMENT • MANAGEMENT

PROVINCE	OFFICE		E-MAIL
Gauteng	Pretoria	(012) 940-1111	pta@wsp.co.za
	Polokwane	(015) 291-0400	pk@wsp.co.za
Free State	Bloemfontein	(051) 447-1217	bf@wsp.co.za
	Welkom	(057) 353-2400	wel@wsp.co.za
Northern Cape	Upington	(054) 337-0600	up@wsp.co.za
	Springbok	(027) 712-3814	sp@wsp.co.za
KwaZulu Natal	Durban	(031) 384-6300	dbn@wsp.co.za
	Empangeni	(035) 772-0112	emp@wsp.co.za
Eastern Cape	Port Elizabeth	(041) 374-0400	bwa@wsp.co.za
	East London	(043) 735-3800	ibg@wsp.co.za
Western Cape	Cape Town	(021) 527-7000	cpt@wsp.co.za

Visit or contact us online at www.bvipnsp.co.za

PROJECT

REALIGNMENT OF THE R44/R310 AND ALEXANDER STREET JUNCTION

DRAWING TITLE

TRAFFIC ACCOMMODATION LAYOUT - PHASE 2 (OVERVIEW)

APPROVED BY BVI

ENGINEER/TECHNOLOGIST	REG. NO.	DATE

SCALE	1:2000 @ A0	DRAWN	JAS
DESIGNED	FMG	CHECKED	LP

PLAN NUMBER	REVISION NO.	DATE SAVED
34092.00-119-02	T1	12 February 2026

O:\PROJECTS DRAWINGS\34000 - 34999\34092.00\CIVIL\TENDER DRAWINGS\REVT1\34092.00-119-01 TO 05 REVT1_(TRAFFIC ACCOMMODATIONLAYOUTS).DWG

34092.00-119-01 TO 05 REVT1 (TRAFFIC ACCOMMODATIONLAYOUTS).DWG

Thursday, February 12, 2026 6:02:49 PM

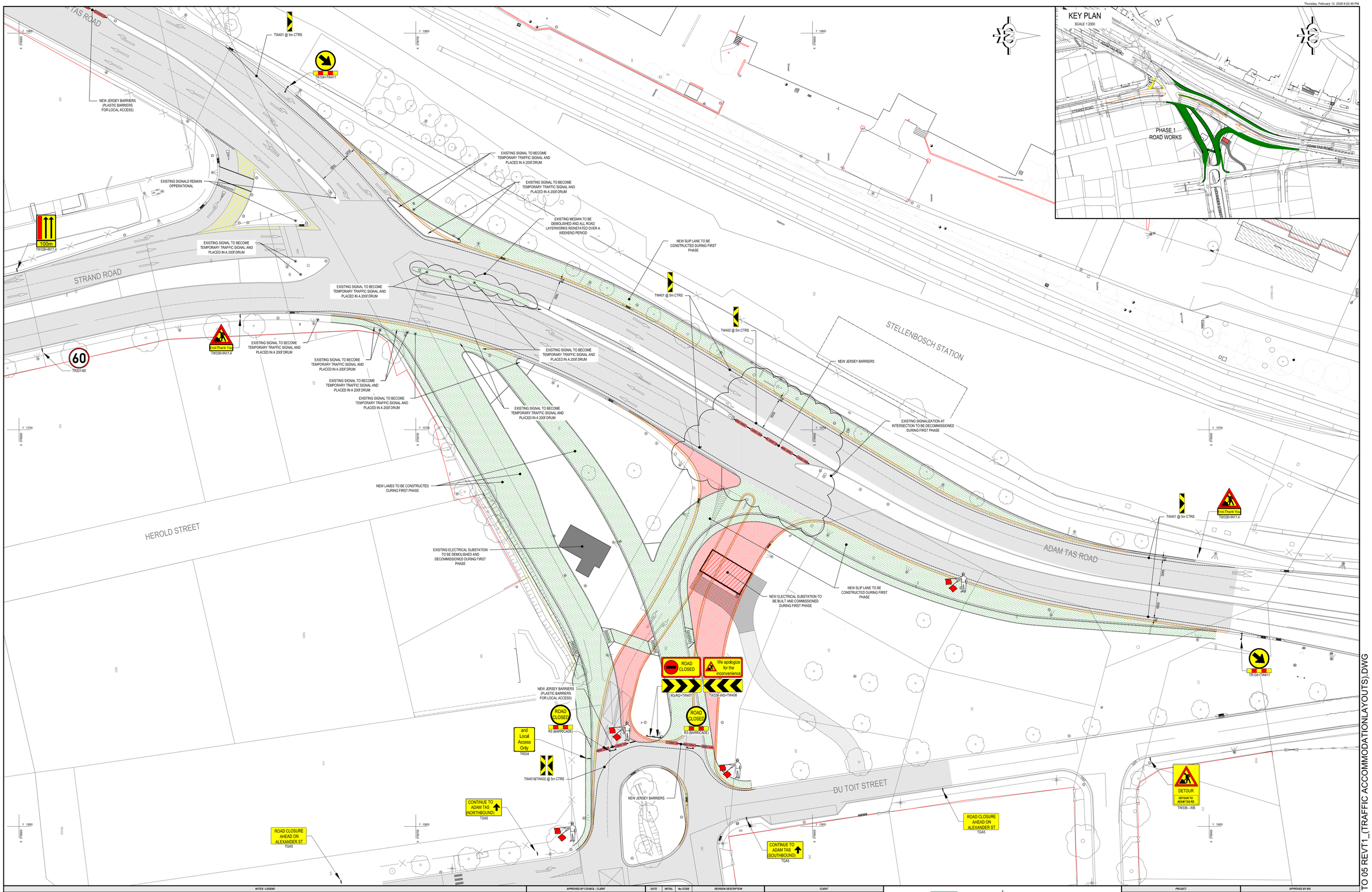

NOTES / LEGEND

- NEW TRAFFIC ISLAND / LANDSCAPING
- NEW PROPOSED MEDIAN CLOSURES (INTERSECTION CHANGE TO LEFT-IN & LEFT-OUT OPERATION)
- NEW PROPOSED SUSPENDED BRIDGE (BRIDGE-OVER-ROAD & BRIDGE-OVER-RAIL)
- EXISTING ROAD SECTIONS TO BE REMOVED.
- EXISTING ROADWAY TO REMAIN IN PLACE.
- NEW ROAD SECTIONS TO BE ADDED TO EXISTING ROADWAY.
- NEW SIDEWALK SECTIONS TO BE ADDED TO EXISTING SIDEWALKS.
- NEW KERBS TO BE INSTALLED
- EXISTING KERBS TO BE REMOVED

APPROVED BY COUNCIL / CLIENT

CITY ENGINEER / CLIENT | REG. NO. | DATE

AMENDMENTS CODE

A,B,C,... : BEFORE TENDER
TD : TENDER DRAWING
0,1,2,3,... : AFTER TENDER
2 : AS BUILT

A: BY CLIENT
B: BY ARCHITECT
C: BY MECHANICAL OR ELECTRICAL
D: BY BVI
E: BY OTHERS ( )

DATE	INITIAL	No./CODE	REVISION DESCRIPTION
12/02/2026	FMG	T1D	ISSUED FOR TENDER

CLIENT

STELLENBOSCH
UMLUNGISELO WOMLA WOMASIPALA
MUNICIPALITY • UMASIPALA • MUNISIPALITEIT

bvi 50 YEAR CELEBRATION EST 1967-2017
• ENGINEERING • PROCUREMENT • MANAGEMENT

PROVINCE	OFFICE	☎	E-MAIL
Gauteng	Pretoria	(012) 940-1111	pta@bvi.co.za
	Polokwane	(015) 291-0400	plk@bvi.co.za
Free State	Bloemfontein	(051) 401-2727	bfn@bvi.co.za
	Welkom	(057) 352-2456	wel@bvi.co.za
Northern Cape	Upington	(054) 337-8000	upt@bvi.co.za
	Springbok	(027) 712-8114	spb@bvi.co.za
KwaZulu-Natal	Durban	(031) 266-8262	dbn@bvi.co.za
	Empangeni	(035) 772-4112	emp@bvi.co.za
Eastern Cape	Port Elizabeth	(041) 373-6421	bviep@mweb.co.za
	East London	(043) 726-9900	bvi@bvi.co.za
Western Cape	Cape Town	(021) 527-1700	capt@bvi.co.za

Visit or contact us online at www.bvigroup.co.za

Registration No. 1998/003015/07

PROJECT

REALIGNMENT OF THE R44/R310 AND ALEXANDER STREET JUNCTION

DRAWING TITLE

TRAFFIC ACCOMMODATION FOR CONSTRUCTION OF PHASE 1

APPROVED BY BVI

ENGINEER/TECHNOLOGIST | REG. NO. | DATE

SCALE	1:300 @ A0	DRAWN	JAS
DESIGNED	FMG	CHECKED	LP
PLAN NUMBER		REVISION NO.	DATE SAVED
34092.00-119-03		T1	12 February 2026

0 10 50 100

O:\PROJECTS DRAWINGS\34000 - 34999\34092.00\CIVIL\TENDER DRAWINGS\REVT1\34092.00-119-01 TO 05 REVT1_(TRAFFIC ACCOMMODATIONLAYOUTS).DWG

34092.00-119-01 TO 05 REVT1_(TRAFFIC ACCOMMODATIONLAYOUTS).DWG

Friday, 13 February 2026 09:47:10

BENCHMARKS

DESCRIPTION	X	Y	ELEVATION
ATP1	3756221.040	13624.060	96.910
ATP2	3756315.010	13642.240	95.990
ATP3	3756425.980	13660.430	95.874
ATP4	3756239.250	13517.600	98.101
ATP7	3756736.980	13758.010	95.380
ATP9	3756136.318	13575.038	98.962
LD1	3756524.430	13625.425	96.770
O29D	3756204.120	13348.020	100.014
O31C	3756830.300	13739.590	94.830
RG1	3756621.390	13598.664	97.390
RG2	3756630.094	13688.400	96.250
RG5	3756731.683	13742.469	95.540
WP3	3756828.953	13722.723	95.830

STRUCTURE TABLE - STORMWATER

STRUCTURE NAME	Y	X	COVER LEVEL	INVERT LEVEL / DEPTH	PIPE INVERTS
EX. SWMW 2	13724.982	3756706.956	95.500	94.350 1.150	94.350 IN 94.802 IN 94.350 OUT
EX. SWMW 03	13638.153	3756658.496	96.755	95.500 1.255	95.500 IN 95.500 OUT
EX. SWMH 12	13767.101	3756699.121	95.461	93.840 1.621	93.840 IN 94.170 IN 93.840 OUT
EX. SWMH 13	13754.668	3756676.954	95.626	93.980 1.646	93.980 IN 94.280 IN 93.980 OUT
EX. SWMH 15	13737.442	3756645.359	95.847	94.090 1.757	94.090 IN 94.090 IN 94.090 OUT
EX. SWMH 16	13731.585	3756646.051	95.738	94.160 1.578	94.160 IN 94.160 OUT
EX. SWMH 18	13697.064	3756652.079	95.964	94.290 1.674	94.290 IN 94.290 IN 94.290 OUT
EX. SWMH 19	13681.874	3756629.368	96.291	94.610 1.681	94.610 IN 94.715 IN 94.610 OUT
EX. SWMH 20	13670.608	3756610.275	96.264	94.780 1.484	94.780 IN 94.780 IN 94.780 OUT
EX. SWMH 35	13668.363	3756477.011	95.906	94.490 1.416	94.490 IN 94.635 IN
SWCP 01	13760.988	3756702.972	95.047	94.311 0.736	94.311 OUT
SWCP 02	13747.464	3756677.522	95.317	94.402 0.915	94.402 OUT
SWCP 03	13728.004	3756633.713	95.796	94.846 0.950	94.846 OUT
SWCP 04	13724.102	3756705.810	95.803	95.070 0.733	95.070 OUT
SWCP 05	13690.998	3756660.747	95.927	94.900 1.027	94.900 OUT
SWCP 06	13684.726	3756626.453	96.047	95.039 1.008	95.039 OUT
SWCP 07	13681.652	3756679.382	96.033	95.400 0.633	95.400 OUT
SWCP 9	13660.915	3756614.786	96.274	95.374 0.900	95.374 OUT
SWCP 10	13670.524	3756595.353	95.936	95.036 0.900	95.036 OUT
SWCP 11	13672.230	3756531.704	95.807	95.100 0.707	95.100 OUT
SWCP 12	13667.589	3756507.361	95.791	94.790 1.001	94.790 IN 94.790 OUT
SWMH 01	13680.952	3756682.148	96.295	95.195 1.100	94.940 IN 95.351 IN 94.940 OUT

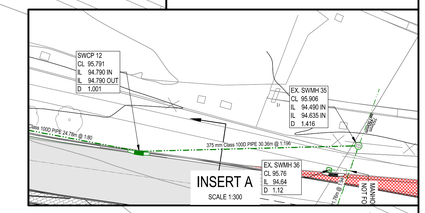

NOTES / LEGEND

SERVICES LEGEND:
- EXISTING STORMWATER LINE
- NEW STORMWATER LINE
- EXISTING STORMWATER MANHOLE
- NEW STORMWATER MANHOLE
- EXISTING STORMWATER CATCHPIT
- NEW STORMWATER CATCHPIT
- SUBSOIL LINE

NOTE:
- CONTOURS REPRESENT DESIGN LEVELS
- OFFSETS FROM CADASTRAL BOUNDARIES SHOULD BE AS PER DETAILED CROSS SECTION DIMENSIONS, NO SCALING OFF THIS DRAWING ALLOWED.
- CONCRETE PIPES TO BE CLASS 100D SPIGOT AND SOCKET.
- STORMWATER PIPES ON CLASS B BEDDING AS PER SABS1200LB.
- ALL MANHOLES TO BE BUILT WITH PRECAST CONCRETE RINGS.
- MANHOLES & CATCHPITS TO BE BUILT WITH R.O.K. BRICKS ONLY.
- SUB-SOIL PIPES TO BE 100mm "CORFLO" OR SIMILAR APPROVED.
- ALL EXISTING STORMWATER STRUCTURES TO BE ADJUSTED TO NEW DESIGN LEVELS WHERE REQUIRED.

APPROVED BY COUNCIL / CLIENT

CITY ENGINEER / CLIENT — REG. NO. — DATE

AMENDMENTS CODE

A,B,C... = BEFORE TENDER
TO ... = TENDER DRAWING
1,1,2,1... = AFTER TENDER
2 ... = AS BUILT

A: BY CLIENT
B: BY ARCHITECT
C: BY MECHANICAL OR ELECTRICAL
D: BY BH
E: BY OTHER ( )

DATE	INITIAL	No./CODE	REVISION DESCRIPTION
12/02/2026	FMG	TO/0	ISSUED FOR TENDER

CLIENT

STELLENBOSCH
UMASIPALA LA MBISPALATELI
MUNICIPALITY • UMASIPALA • MBISPALATELI

• ENGINEERING • PROCUREMENT • MANAGEMENT

Registration No. 1998/003115/07

PROVINCE — OFFICE — TEL — E-MAIL

PROVINCE	OFFICE	TEL	E-MAIL
Gauteng	Pretoria	(012) 940-1111	pta@vpuk.co.za
	Polokwane	(015) 291-5400	pla@vbi.co.za
Free State	Bloemfontein	(051) 447-2121	bfn@vbi.co.za
	Welkom	(057) 352-6000	wel@vbi.co.za
Northern Cape	Upington	(054) 331-6600	upt@vbi.co.za
	Springbok	(027) 712-8014	spb@vbi.co.za
KwaZulu-Natal	Durban	(031) 266-8282	dbn@vbi.co.za
	Empangeni	(035) 772-4112	emp@vbi.co.za
Eastern Cape	Port Elizabeth	(041) 373-4000	hse@vbi.co.za
	East London	(043) 726-3080	bg@vbi.co.za
Western Cape	Cape Town	(021) 527-7000	cpt@vbi.co.za

Visit or contact us online at www.vbigroup.co.za

PROJECT

REALIGNMENT OF THE R44/R310 AND ALEXANDER STREET JUNCTION

DRAWING TITLE

STORMWATER LAYOUT - PHASE 1

APPROVED BY BVI

ENGINEER/TECHNOLOGIST — REG. NO. — DATE

SCALE	1:300 @ A0	DRAWN	JAS
DESIGNED	FMG	CHECKED	LP
PLAN NUMBER		REVISION NO.	DATE SAVED
34092.00-120-01		T0	12 Febraury 2026

34092.00-120-01 REVT0_(STORMWATER LAYOUT - PHASE 1).DWG

O:\PROJECTS DRAWINGS\34000 - 34999\34092.00\CIVIL\TENDER DRAWINGS\REVT1\34092.00-120-01 REVT0_(STORMWATER LAYOUT - PHASE 1).DWG

0 10 50 100

GENERAL NOTES:

1. ALL WORK TO BE DONE IN ACCORDANCE WITH SABS/SANS1200 & THE PROJECT SPECIFICATIONS.
2. ALL LEVELS ARE IN METERS ABOVE MEAN SEA LEVEL UNLESS OTHERWISE STATED.
3. DO NOT SCALE. USE FIGURED DIMENSIONS ONLY. ALL LEVELS TO BE CHECKED BEFORE CONSTRUCTION COMMENCES AND DISCREPANCIES REPORTED TO THE ENGINEER.
4. THESE DRAWING SHALL BE READ IN CONJUNCTION WITH THE ARCHITECTS DRAWINGS (IF APPLICABLE).
5. ALL SETTING OUT COORDINATES AND DIMENSIONS SHOWN ON THIS DRAWING SHALL BE VERIFIED BY CONTRACTOR IN ORDER TO ENSURE THAT ON-SITE REQUIREMENTS ARE MET. ANY DISCREPANCIES MUST BE REPORTED TO THE ENGINEER PRIOR TO THE ORDERING OF ANY MATERIALS AND/OR THE COMMENCEMENT OF CONSTRUCTION.
6. THE POSITION AND DEPTH OF ALL EXISTING SERVICES ON AND OFF THE SITE WERE AFFECTED BY THE WORKS, SHALL BE CONFIRMED PRIOR TO THE COMMENCEMENT OF ANY CONSTRUCTION WORK ON THE INSTALLATION OF SERVICES. THE CONTRACTOR SHALL PROTECT ALL EXISTING SERVICES FROM DAMAGE THROUGHOUT CONSTRUCTION.
7. THE CONTRACTOR MUST IMMEDIATELY NOTIFY THE ENGINEER OF ANY EXISTING SERVICES FOUND WHICH ARE NOT INDICATED ON THE DRAWINGS.

DEMOLITION NOTES:

1. ALL DEMOLITION WORKS TO BE DONE IN ACCORDANCE WITH RELEVANT SECTIONS OF SANS 1200C.
2. THE CONTRACTOR WILL PRIOR TO THE START OF CONSTRUCTION AND/OR DEMOLITION WORKS CHECK AND EXPOSE TIE-IN POINTS AND VERIFY ALL EXISTING SERVICES INVERT LEVELS AND EXTENT OF EXISTING UNDERGROUND SERVICES.
3. ALL EXISTING MANHOLES AND VALVE CHAMBERS OR STRUCTURES SITUATED IN THE DEMOLITION AREA SHALL BE SAFEGUARDED DURING THE DEMOLITION WORKS.
4. ALL EXISTING FIXTURES (ROAD SIGNS, BENCHES, POSTS, ETC) SITUATED IN THE DEMOLITION WORKS AREA SHALL BE SAFELY REMOVED AND STORED FOR RE-USE, UNLESS OTHERWISE INSTRUCTED BY ENGINEER
5. DURING DEMOLITION WORK, ALL MECHANICAL SYSTEMS AND BUILDING SERVICES SERVING OCCUPIED AREAS SHALL BE MAINTAINED OPERATIONAL. WHERE SYSTEM OR SERVICE INTERRUPTIONS ARE REQUIRED, ALTERNATIVE ARRANGEMENTS MUST BE CONFIRMED WITH THE ENGINEER AND FACILITIES MANAGER PRIOR TO ANY DEMOLITION WORKS.
6. AREAS OF DEMOLITION ARE APPROXIMATE; IT IS THE CONTRACTOR'S RESPONSIBILITY TO COORDINATE DEMOLITION WITH EXISTING CONDITIONS & NEW CONSTRUCTION.
7. EXISTING SERVICES AND STRUCTURES TO REMAIN SHALL BE PROTECTED DURING DEMOLITION AND NEW WORK CONSTRUCTION ACTIVITIES. EXISTING FLOORING AND FINISHES TO REMAIN UNLESS OTHERWISE CONFIRMED BY THE ENGINEER.
8. THE EXTENT OF DEMOLITION INDICATED IS BASED ON AS BUILT DRAWINGS PROVIDED BY THE OWNER AND FIELD OBSERVATIONS. ANY DISCREPANCIES BETWEEN ACTUAL CONDITIONS AND THOSE INDICATED ARE TO BE BROUGHT TO THE ATTENTION OF THE ENGINEER AS SOON AS DISCREPANCIES ARE DISCOVERED, BEFORE DEMOLITION IS TO CONTINUE IN SUCH AREA.
9. DISPOSAL OF MATERIAL GENERATED FROM DEMOLITION WORKS SHALL BE SORTED AND DISPOSED OF AT A REGISTERED AND APPROVED DUMP FACILITY ACCORDING TO THE APPROVED DEMOLITION PLAN
10. ALL EXISTING PAVING BLOCKS AND PRECAST KERBS SHALL BE UPLIFTED AND TEMPORARILY STOCKPILED FOR RE-SUE, UNLESS OTHERWISE INSTRUCTED BY THE ENGINEER.
11. MATERIAL GENERATED FORM DEMOLITION WORKS TO STRUCTURAL ELEMENTS (SUCH AS BRICKS) SHALL BE STOCKPILED IN A SEPARATE TEMPORARY STOCKPILE FOR RE-USE. CRUSHING OF MATERIAL FOR RE-USE IN PERMANENT WORKS ONLY TO BE DONE ON APPROVAL OF THE ENGINEER AND APPROPRIATE TESTING.
12. NO TREES SHALL BE REMOVED OR TRIMMED UNLESS SO INSTRUCTED BY THE ENGINEER.
13. ALL TREE ROOTS BELOW NEW BUILDING FOOTPRINTS SHALL BE REMOVED TO A DEPTH OF 1.0M BELOW THE NEW FOUNDATION LEVELS. REINSTATEMENT OF THESE EXCAVATIONS SHALL BE DONE WITH MINIMUM G7 QUALITY MATERIAL COMPACTED TO 97% MDD (100% FOR SAND) TO ACHIEVE CBR OF 15% IN TOP 150mm.
14. ALL EXISTING UNDERGROUND SERVICES PROVIDING CONNECTIONS TO THE BUILDINGS WHICH SHALL BE DEMOLISHED WILL BE REMOVED. REINSTATEMENT OF THESE SERVICE TRENCHES SHALL BE DONE WITH MINIMUM G7 QUALITY MATERIAL COMPACTED TO 97% MDD (100% FOR SAND) TO ACHIEVE CBR OF 15% IN TOP 150mm.

STORMWATER NOTES:

1. THE CONTRACTOR WILL PRIOR TO THE START OF CONSTRUCTION SURVEY THE EXISTING TIE-IN POINT(S) AND SUBMIT THE INFORMATION TO THE ENGINEER FOR APPROVAL AND NOTIFY ANY DISCREPANCIES AFFECTING THE DESIGN.
2. ALL STORMWATER PIPES MUST BE SPIGOT AND SOCKET CLASS 100D, UNLESS OTHERWISE SPECIFIED (U.O.S).
3. ALL PVC-U PIPES SHALL BE HEAVY DUTY, CLASS 34, SPIGOT AND SOCKED TO SANS 966 (IF APPLICABLE), U.O.S.
4. MINIMUM DIAMETER 300mm FOR CATCHPIT CONNECTIONS
5. MINIMUM DIAMETER 375mm MAIN LINES
6. PIPE BEDDING TO BE CLASS B (SANS 1200LB), U.O.S.
7. PIPES TO CONNECT CROWN TO CROWN WHERE PIPE DIAMETER CHANGES.
8. CONTRACTOR TO REPORT ANY DISCREPANCY WITH INFORMATION OR ON-SITE CONDITIONS TO THE ENGINEER PRIOR TO EXCAVATION, ORDERING OF MATERIALS, CONDUCTION OF ELEMENTS/STRUCTURES.
9. ALL MANHOLES SHALL BE WATER TIGHT.
10. ALL BENCHING INSIDE MANHOLES/CHAMBERS FLOORS SHALL BE RENDERED IN 20mm THICK 1:3 CEMENT MORTAR AND FINISHED SMOOTH AND TRUE WITH A STEEL TROWEL AND ROUNDED AT CORNERS AND EDGES.
11. ALL EXCAVATIONS AND BEDDING MUST BE INSPECTED AND APPROVED BY THE ENGINEER BEFORE LAYING OF ANY PIPES.
12. THE CONTRACTOR SHALL SUBMIT AS-BUILT INFORMATION OF THE UNDERGROUND SERVICES TO THE ENGINEER FOR APPROVAL AT THE COMPLETION OF THE PROJECT, PRIOR TO FULL CERTIFICATION FOR PAYMENT.
13. ALL NEWLY INSTALLED PIPES SHALL BE SUBJECTED TO ACCEPTANCE TESTS TO SANS 1200 LD. THE STORMWATER MAINS SHALL BE TESTED IN SECTIONS BETWEEN MANHOLES/CHAMBERS AND OTHER PLUMBING FIXTURES. ALL TEST RESULTS SHALL BE RECORDED AND PRESENTED TO THE ENGINEER.
14. AFTER BACKFILLING AND COMPACTION OF FILL OVER PIPES, THE STORMWATER SHALL BE RETESTED TO CERTIFY THAT IT HAS NOT BEEN DISTURBED OR DAMAGED DURING BACKFILLING.
15. COVERS AND FRAMES SHALL BE GROUTED SOLIDLY ONTO THE SHAFTS. THE ENGINEERS WILL DIRECT HOW CONCRETE SURROUNDS ARE TO BE FINISHED OFF TO SUIT SURROUNDING SURFACES.
16. ALL FINAL SIDEWALK PAVING LEVELS AND RAMPS TO BE CLARIFIED WITH ENGINEER PRIOR TO PLACEMENT AND COMPLETION OF THE STORMWATER MANHOLE COVER FRAME AND ACCESS LID.
17. ALL FINAL LEVELS AND SLOPES FOR THE WALKWAYS / SIDEWALKS SHALL BE COORDINATED WITH THE DETAILS PROVIDED ON THE REFERENCE DRAWING (IF APPLICABLE).
18. ALL MASONRY USED IN CONSTRUCTION OF MANHOLES OR CATCHPITS SHALL BE R.O.K. BRICKS WITH MIN. 21MPa STRENGTH, SOLID CLAY BRICKS.
19. CONTRACTOR MUST SUBMIT AS BUILT SURVEY (FROM EXTERNAL REGISTERED SURVEYOR), DRAWING DATA OF ALL CONSTRUCTED SERVICES INCLUSIVE (INVERT LEVELS, COVER LEVELS AND PIPE SLOPES) WHERE APPLICABLE.

LEGEND:

(SWMH)	- STORMWATER MANHOLE
(SWHW)	- STORMWATER HEADWALL
(SWGG)	- STORMWATER GULLY GRID (DOWN PIPES)
(SWCP)	- STORMWATER CATCHPIT
(SWS)	- STORMWATER STUB
(SWRE)	- STORMWATER RODDING-EYE
(EX.)	- EXISTING
(CL)	- CULVERT LEVEL
(IL)	- INVERT LEVEL
(D)	- DEPTH

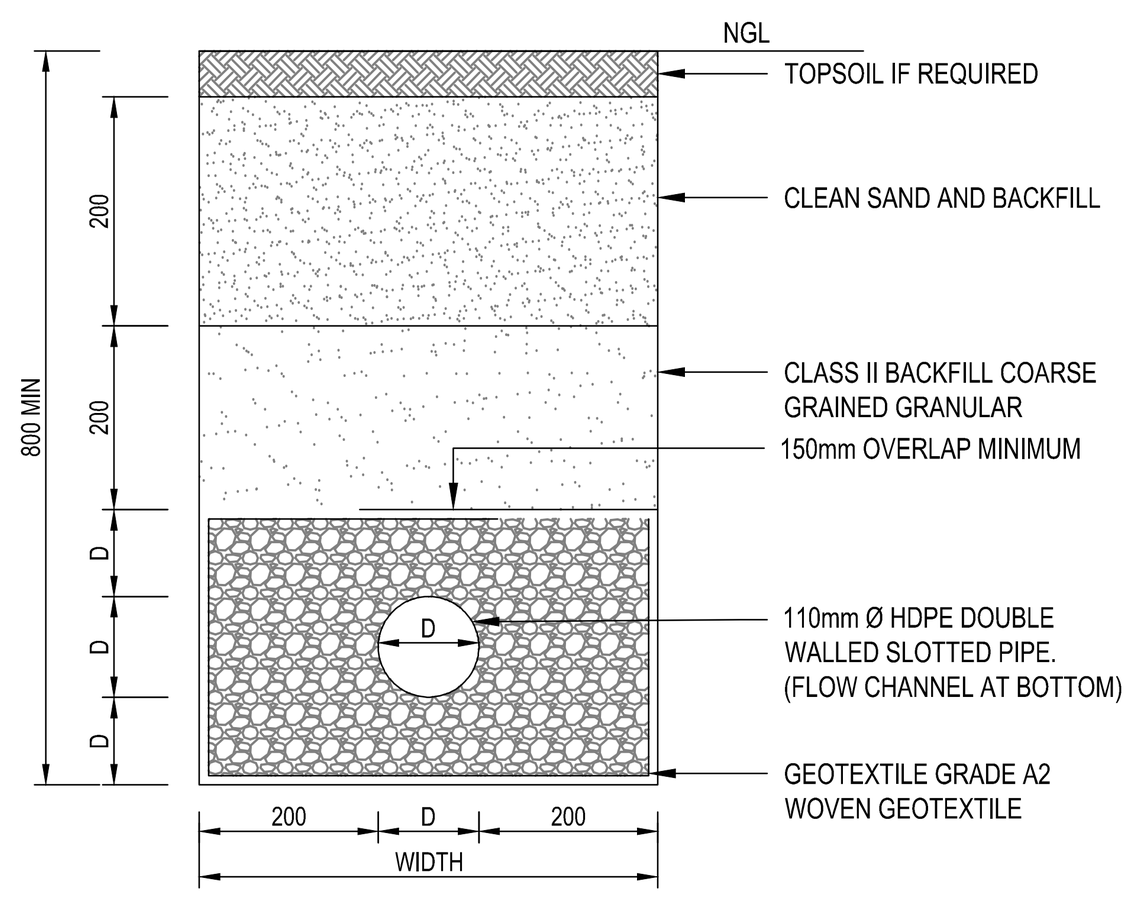

FOR GENERAL USE

NOTES: PIPE BACKFILL
1. CLASS i - CRUSHED ROCK STONE AGGREGATE WITH LITTLE OR NO FINES (9-38mm)
2. CLASS ii - COARSE GRAINED FREE DRAINING NON-COHESIVE GRANULAR SOILS (0.6 - 38mm, FINES< 5%)

TYPICAL SECTION OF SUBSURFACE DRAINS

SCALE 1:10

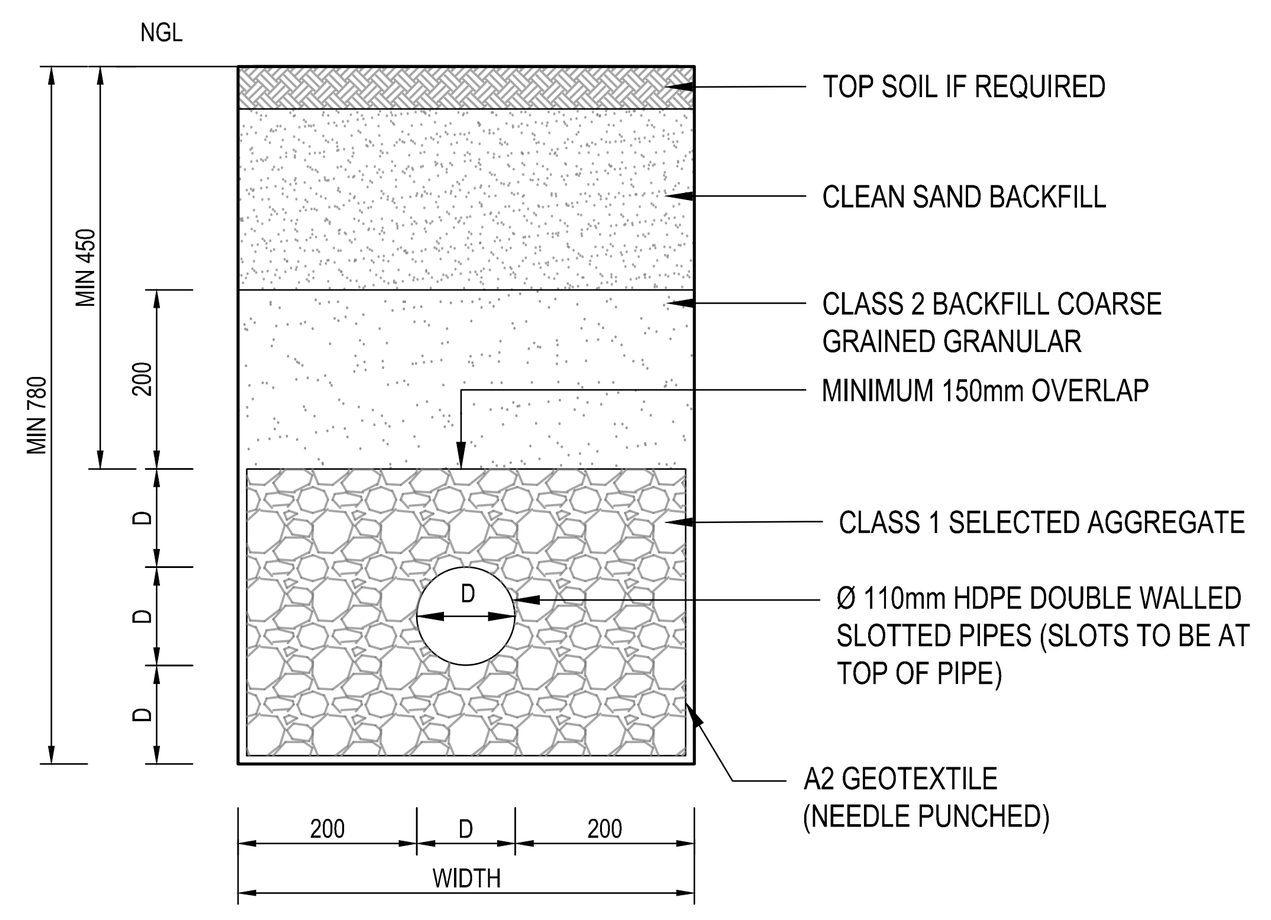

FOR GENERAL USE

NOTES: PIPE BACKFILL
1. CLASS i - CRUSHED ROCK STONE AGGREGATE WITH LITTLE OR NO FINES (9-38mm)
2. CLASS ii - COARSE GRAINED FREE DRAINING NON-COHESIVE GRANULAR SOILS (0.6 - 38mm, FINES< 5%)

TYPICAL SECTION OF SUBSURFACE DRAIN

SCALE 1:10

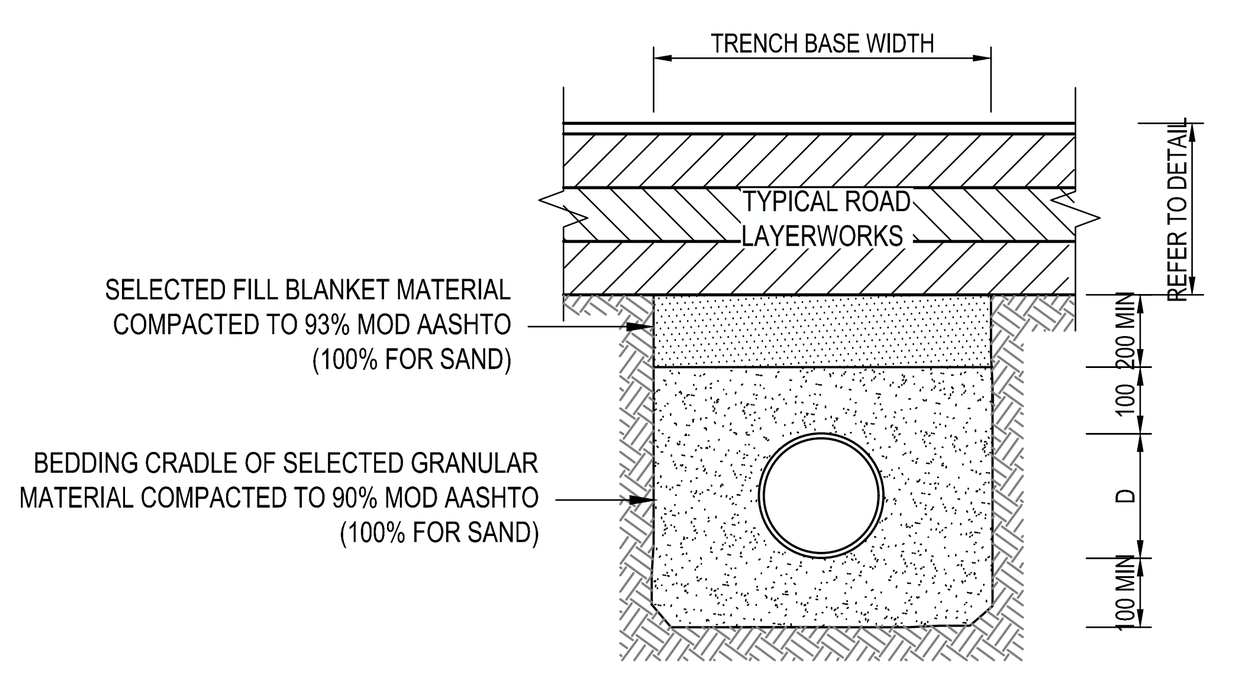

BACKFILLING OVER FLEXIBLE PIPELINE IN ROADWAYS

SCALE 1:25

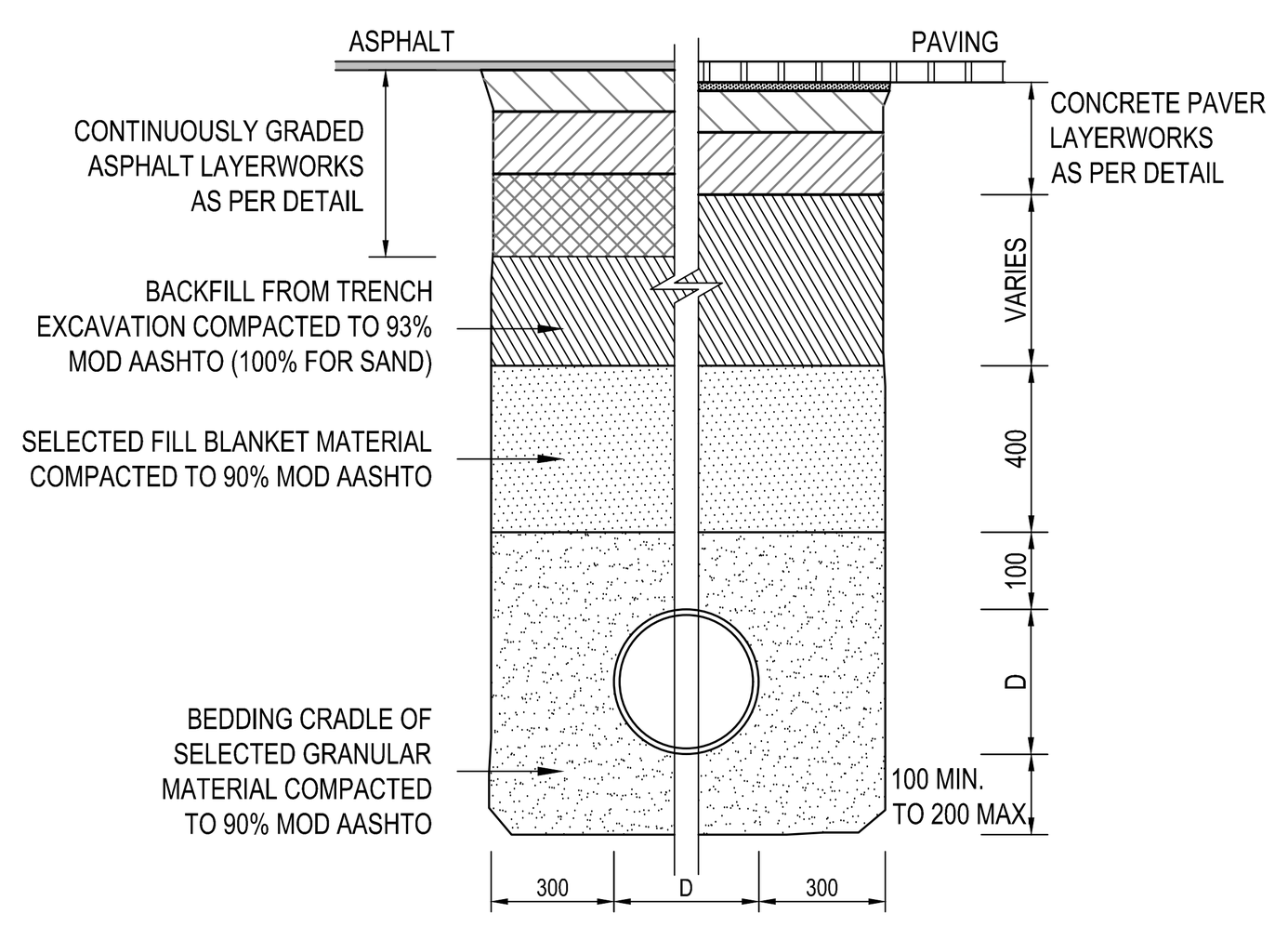

BACKFILLING OVER FLEXIBLE PIPELINE

SCALE 1:20

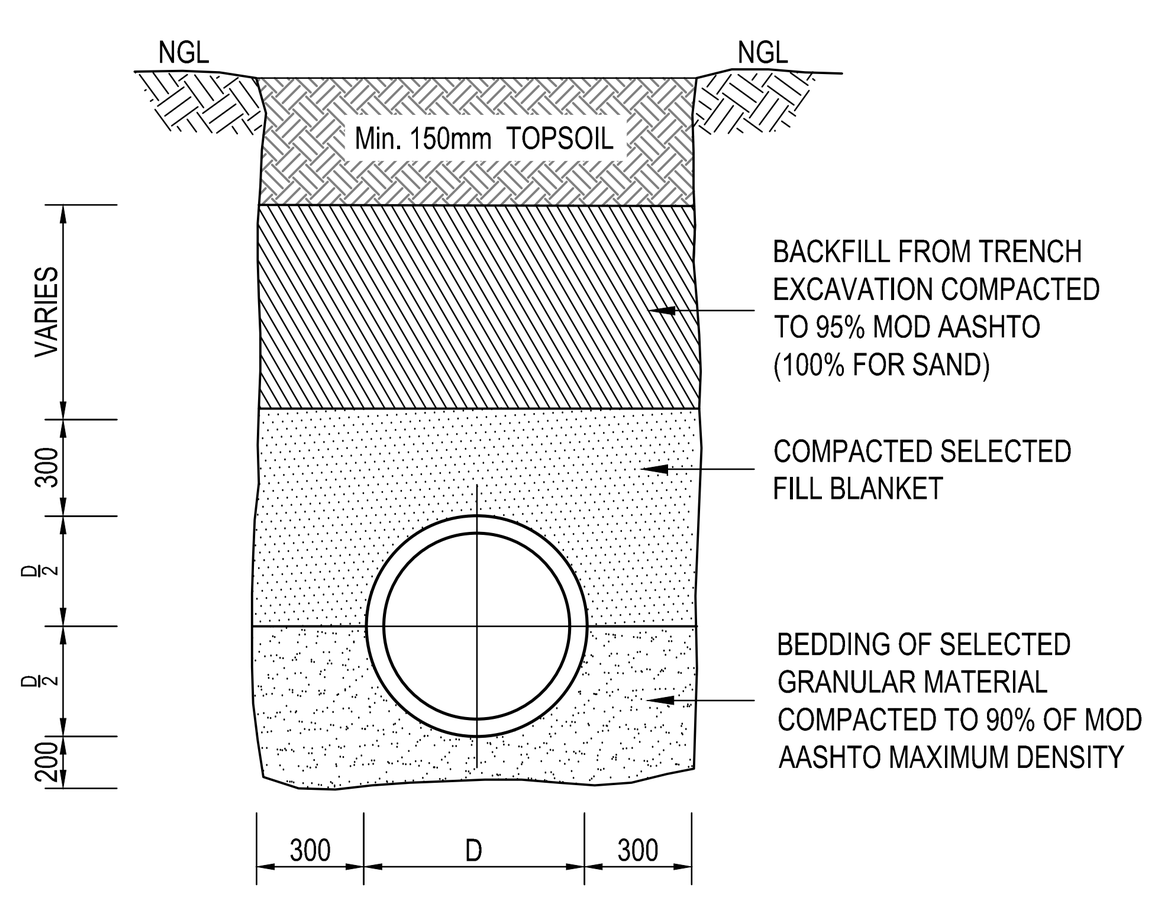

BACKFILLING OVER RIGID PIPELINE (SOFT LANDSCAPING)

SCALE 1:20

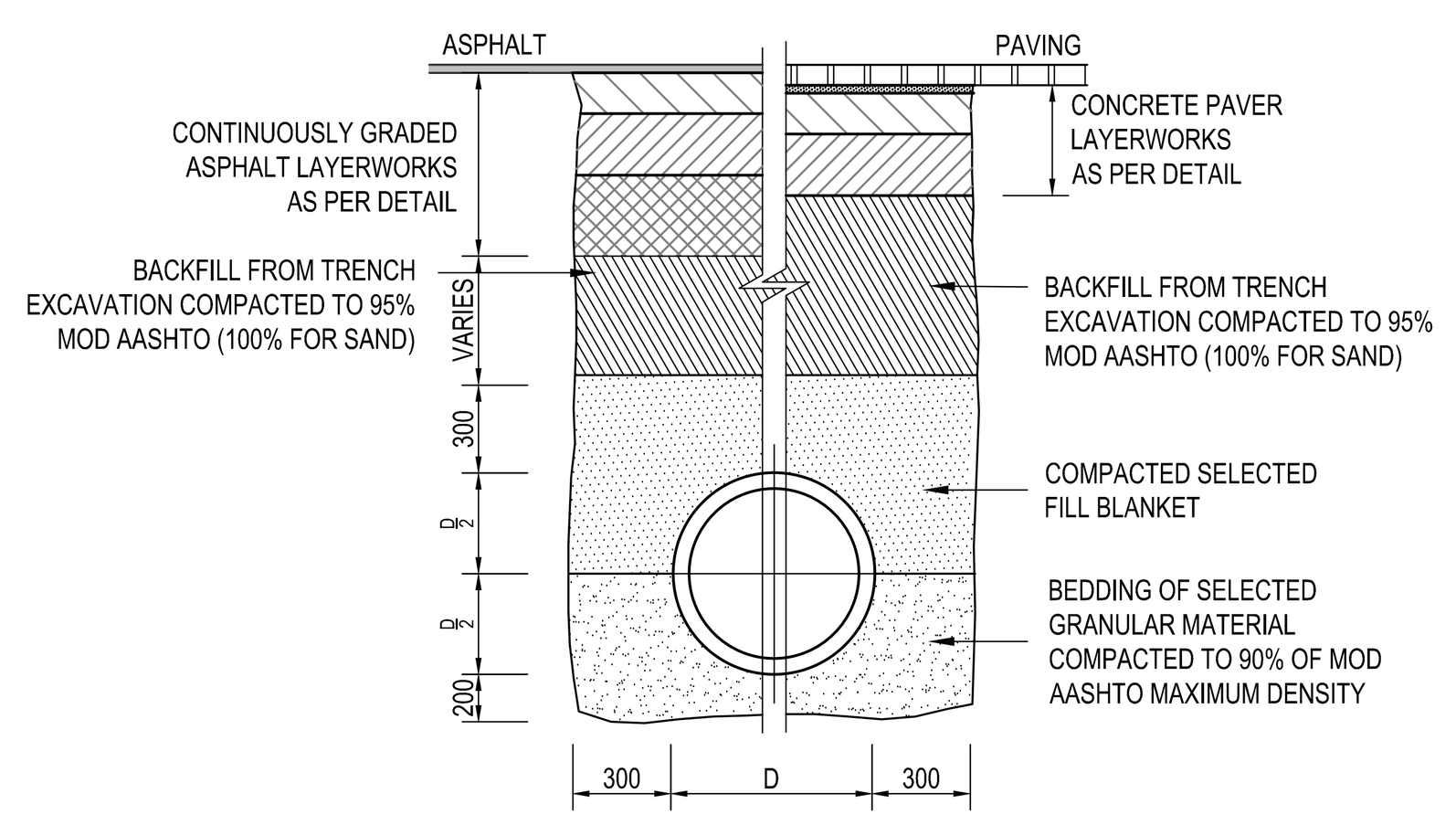

BACKFILLING OVER RIGID PIPELINE (HARD LANDSCAPING/ROADWAY)

SCALE 1:20

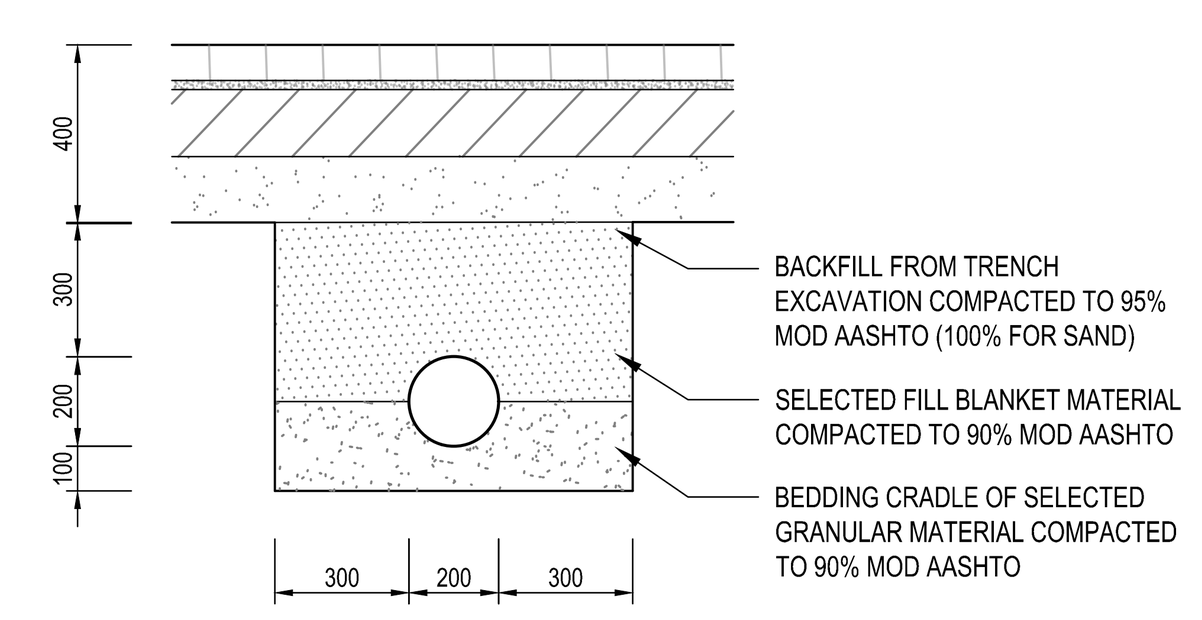

TYPICAL BACKFILLING OVER STORMWATER PIPES

SCALE 1:20

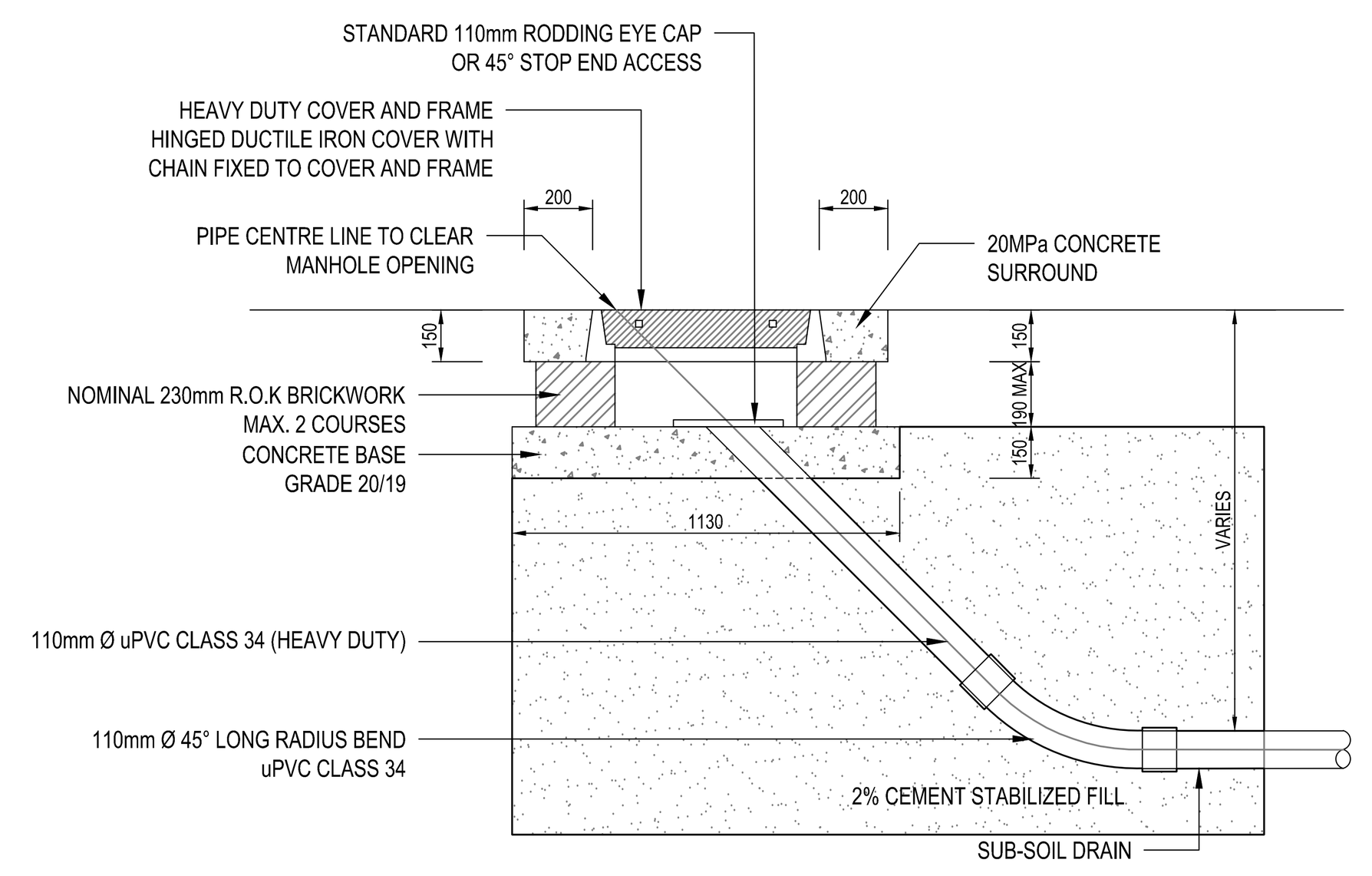

TYPICAL SECTION FOR SUBSOIL RODDING-EYE

SCALE 1:20

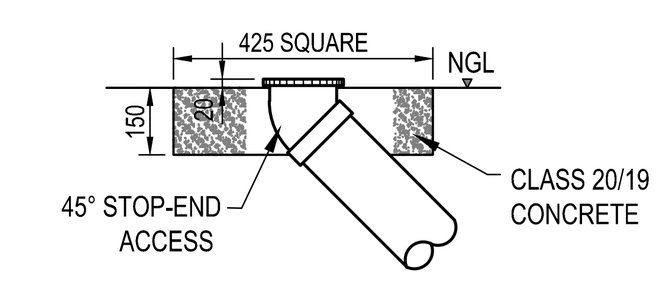

RODDING EYE DETAIL ON ERF

SCALE 1:20

NOTES / LEGEND

APPROVED BY COUNCIL / CLIENT

CITY ENGINEER / CLIENT | REG. NO. | DATE

AMENDMENTS CODE

A,B,C... / : BEFORE TENDER	/A : BY CLIENT
T0 / : TENDER DRAWING	/B : BY ARCHITECT
0,1,2,3... / : AFTER TENDER	/C : BY MECHANICAL OR ELECTRICAL
Z / : AS BUILT	/D : BY BVi
	/E : BY OTHER ( )

DATE	INITIAL	No./CODE	REVISION DESCRIPTION
12/02/2026	FMG	T0/D	ISSUE FOR TENDER

CLIENT

STELLENBOSCH MUNICIPALITY • UMASIPALA • MUNISIPALITEIT

bvi 50 YEAR CELEBRATION EST 1967-2017
• ENGINEERING • PROCUREMENT • MANAGEMENT

Registration no. 1998/000157/07

PROVINCE	OFFICE	☎	E-MAIL
Gauteng	Pretoria	(012) 940-1111	pta@bvigp.co.za
	Polokwane	(015) 291-5400	js@bvilp.co.za
Free State	Bloemfontein	(051) 447-2137	bfn@bvifs.co.za
	Welkom	(057) 353-2499	wel@bvifs.co.za
Northern Cape	Upington	(054) 337-6600	upt@bvinc.co.za
	Springbok	(027) 712-3614	spk@bvinc.co.za
KwaZulu Natal	Durban	(031) 266-8382	dbn@bvikn.co.za
	Empangeni	(035) 772-6112	emp@bvikn.co.za
Eastern Cape	Port Elizabeth	(041) 373-4343	bviec@mweb.co.za
	East London	(043) 735-3889	Bk@bviec.co.za
Western Cape	Cape Town	(021) 527-7000	cpt@bviwc.co.za

Visit or contact us online at www.bvigroup.co.za

PROJECT

REALIGNMENT OF THE R44/R310 AND ALEXANDER STREET INTERSECTION

DRAWING TITLE

STANDARD DETAILS STORMWATER

APPROVED BY BVi

ENGINEER/TECHNOLOGIST | REG. NO. | DATE

SCALE	AS SHOWN @A0	DRAWN	NADIR FALA
DESIGNED	FM GREEFF	CHECKED	FM GREEFF
PLAN NUMBER		REVISION NO.	DATE SAVED
34092.00-121-01		T0	15 August 2025

34092.00-121-01-REVT0_(STANDARD DETAILS STORMWATER).DWG

O:\PROJECTS DRAWINGS\34000 - 34999\34092.00\CIVIL\TENDER DRAWINGS\34092.00-121-01-REVT0_(STANDARD DETAILS STORMWATER).DWG

STORMWATER NOTES:

1. THE CONTRACTOR WILL PRIOR TO THE START OF CONSTRUCTION SURVEY THE EXISTING TIE-IN POINT(S) AND SUBMIT THE INFORMATION TO THE ENGINEER FOR APPROVAL AND NOTIFY ANY DISCREPANCIES AFFECTING THE DESIGN.
2. ALL STORMWATER PIPES MUST BE SPIGOT AND SOCKET CLASS 100D, UNLESS OTHERWISE SPECIFIED (U.O.S).
3. ALL PVC-U PIPES SHALL BE HEAVY DUTY, CLASS 34, SPIGOT AND SOCKED TO SANS 966 (IF APPLICABLE), U.O.S.
4. MINIMUM DIAMETER 300mm FOR CATCHPIT CONNECTIONS
5. MINIMUM DIAMETER 375mm MAIN LINES
6. PIPE BEDDING TO BE CLASS B (SANS 1200LB), U.O.S.
7. PIPES TO CONNECT CROWN TO CROWN WHERE PIPE DIAMETER CHANGES.
8. CONTRACTOR TO REPORT ANY DISCREPANCY WITH INFORMATION OR ON-SITE CONDITIONS TO THE ENGINEER PRIOR TO EXCAVATION, ORDERING OF MATERIALS, CONDUCTION OF ELEMENTS/STRUCTURES.
9. ALL MANHOLES SHALL BE WATER TIGHT.
10. ALL BENCHING INSIDE MANHOLES/CHAMBERS FLOORS SHALL BE RENDERED IN 20mm THICK 1:3 CEMENT MORTAR AND FINISHED SMOOTH AND TRUE WITH A STEEL TROWEL AND ROUNDED AT CORNERS AND EDGES.
11. ALL EXCAVATIONS AND BEDDING MUST BE INSPECTED AND APPROVED BY THE ENGINEER BEFORE LAYING OF ANY PIPES.
12. THE CONTRACTOR SHALL SUBMIT AS-BUILT INFORMATION OF THE UNDERGROUND SERVICES TO THE ENGINEER FOR APPROVAL AT THE COMPLETION OF THE PROJECT, PRIOR TO FULL CERTIFICATION FOR PAYMENT.
13. ALL NEWLY INSTALLED PIPES SHALL BE SUBJECTED TO ACCEPTANCE TESTS TO SANS 1200 LD. THE STORMWATER MAINS SHALL BE TESTED IN SECTIONS BETWEEN MANHOLES/CHAMBERS AND OTHER PLUMBING FIXTURES. ALL TEST RESULTS SHALL BE RECORDED AND PRESENTED TO THE ENGINEER.
14. AFTER BACKFILLING AND COMPACTION OF FILL OVER PIPES, THE STORMWATER SHALL BE RETESTED TO CERTIFY THAT IT HAS NOT BEEN DISTURBED OR DAMAGED DURING BACKFILLING.
15. COVERS AND FRAMES SHALL BE GROUTED SOLIDLY ONTO THE SHAFTS. THE ENGINEERS WILL DIRECT HOW CONCRETE SURROUNDS ARE TO BE FINISHED OFF TO SUIT SURROUNDING SURFACES.
16. ALL FINAL SIDEWALK PAVING LEVELS AND RAMPS TO BE CLARIFIED WITH ENGINEER PRIOR TO PLACEMENT AND COMPLETION OF THE STORMWATER MANHOLE COVER FRAME AND ACCESS LID.
17. ALL FINAL LEVELS AND SLOPES FOR THE WALKWAYS / SIDEWALKS SHALL BE COORDINATED WITH THE DETAILS PROVIDED ON THE REFERENCE DRAWING (IF APPLICABLE).
18. ALL MASONRY USED IN CONSTRUCTION OF MANHOLES OR CATCHPITS SHALL BE R.O.K. BRICKS WITH MIN. 21MPa STRENGTH, SOLID CLAY BRICKS.
19. CONTRACTOR MUST SUBMIT AS BUILT SURVEY (FROM EXTERNAL REGISTERED SURVEYOR), DRAWING DATA OF ALL CONSTRUCTED SERVICES INCLUSIVE (INVERT LEVELS, COVER LEVELS AND PIPE SLOPES) WHERE APPLICABLE.

LEGEND:

(SWMH)	- STORMWATER MANHOLE
(SWHW)	- STORMWATER HEADWALL
(SWGG)	- STORMWATER GULLY GRID (DOWN PIPES)
(SWCP)	- STORMWATER CATCHPIT
(SWS)	- STORMWATER STUB
(SWRE)	- STORMWATER RODDING-EYE
(EX.)	- EXISTING
(CL)	- CULVERT LEVEL
(IL)	- INVERT LEVEL
(D)	- DEPTH

DEMOLITION NOTES:

1. ALL DEMOLITION WORKS TO BE DONE IN ACCORDANCE WITH RELEVANT SECTIONS OF SANS 1200C.
2. THE CONTRACTOR WILL PRIOR TO THE START OF CONSTRUCTION AND/OR DEMOLITION WORKS CHECK AND EXPOSE TIE-IN POINTS AND VERIFY ALL EXISTING SERVICES INVERT LEVELS AND EXTENT OF EXISTING UNDERGROUND SERVICES.
3. ALL EXISTING MANHOLES AND VALVE CHAMBERS OR STRUCTURES SITUATED IN THE DEMOLITION AREA SHALL BE SAFEGUARDED DURING THE DEMOLITION WORKS.
4. ALL EXISTING FIXTURES (ROAD SIGNS, BENCHES, POSTS, ETC) SITUATED IN THE DEMOLITION WORKS AREA SHALL BE SAFELY REMOVED AND STORED FOR RE-USE, UNLESS OTHERWISE INSTRUCTED BY ENGINEER
5. DURING DEMOLITION WORK, ALL MECHANICAL SYSTEMS AND BUILDING SERVICES SERVING OCCUPIED AREAS SHALL BE MAINTAINED OPERATIONAL. WHERE SYSTEM OR SERVICE INTERRUPTIONS ARE REQUIRED, ALTERNATIVE ARRANGEMENTS MUST BE CONFIRMED WITH THE ENGINEER AND FACILITIES MANAGER PRIOR TO ANY DEMOLITION WORKS.
6. AREAS OF DEMOLITION ARE APPROXIMATE; IT IS THE CONTRACTOR'S RESPONSIBILITY TO COORDINATE DEMOLITION WITH EXISTING CONDITIONS & NEW CONSTRUCTION.
7. EXISTING SERVICES AND STRUCTURES TO REMAIN SHALL BE PROTECTED DURING DEMOLITION AND NEW WORK CONSTRUCTION ACTIVITIES. EXISTING FLOORING AND FINISHES TO REMAIN UNLESS OTHERWISE CONFIRMED BY THE ENGINEER.
8. THE EXTENT OF DEMOLITION INDICATED IS BASED ON AS BUILT DRAWINGS PROVIDED BY THE OWNER AND FIELD OBSERVATIONS. ANY DISCREPANCIES BETWEEN ACTUAL CONDITIONS AND THOSE INDICATED ARE TO BE BROUGHT TO THE ATTENTION OF THE ENGINEER AS SOON AS DISCREPANCIES ARE DISCOVERED, BEFORE DEMOLITION IS TO CONTINUE IN SUCH AREA.
9. DISPOSAL OF MATERIAL GENERATED FROM DEMOLITION WORKS SHALL BE SORTED AND DISPOSED OF AT A REGISTERED AND APPROVED DUMP FACILITY ACCORDING TO THE APPROVED DEMOLITION PLAN
10. ALL EXISTING PAVING BLOCKS AND PRECAST KERBS SHALL BE UPLIFTED AND TEMPORARILY STOCKPILED FOR RE-SUE, UNLESS OTHERWISE INSTRUCTED BY THE ENGINEER.
11. MATERIAL GENERATED FORM DEMOLITION WORKS TO STRUCTURAL ELEMENTS (SUCH AS BRICKS) SHALL BE STOCKPILED IN A SEPARATE TEMPORARY STOCKPILE FOR RE-USE. CRUSHING OF MATERIAL FOR RE-USE IN PERMANENT WORKS ONLY TO BE DONE ON APPROVAL OF THE ENGINEER AND APPROPRIATE TESTING.
12. NO TREES SHALL BE REMOVED OR TRIMMED UNLESS SO INSTRUCTED BY THE ENGINEER.
13. ALL TREE ROOTS BELOW NEW BUILDING FOOTPRINTS SHALL BE REMOVED TO A DEPTH OF 1.0M BELOW THE NEW FOUNDATION LEVELS. REINSTATEMENT OF THESE EXCAVATIONS SHALL BE DONE WITH MINIMUM G7 QUALITY MATERIAL COMPACTED TO 97% MDD (100% FOR SAND) TO ACHIEVE CBR OF 15% IN TOP 150mm.
14. ALL EXISTING UNDERGROUND SERVICES PROVIDING CONNECTIONS TO THE BUILDINGS WHICH SHALL BE DEMOLISHED WILL BE REMOVED. REINSTATEMENT OF THESE SERVICE TRENCHES SHALL BE DONE WITH MINIMUM G7 QUALITY MATERIAL COMPACTED TO 97% MDD (100% FOR SAND) TO ACHIEVE CBR OF 15% IN TOP 150mm.

GENERAL NOTES:

1. ALL WORK TO BE DONE IN ACCORDANCE WITH SABS/SANS1200 & THE PROJECT SPECIFICATIONS.
2. ALL LEVELS ARE IN METERS ABOVE MEAN SEA LEVEL UNLESS OTHERWISE STATED.
3. DO NOT SCALE. USE FIGURED DIMENSIONS ONLY. ALL LEVELS TO BE CHECKED BEFORE CONSTRUCTION COMMENCES AND DISCREPANCIES REPORTED TO THE ENGINEER.
4. THESE DRAWING SHALL BE READ IN CONJUNCTION WITH THE ARCHITECTS DRAWINGS (IF APPLICABLE).
5. ALL SETTING OUT COORDINATES AND DIMENSIONS SHOWN ON THIS DRAWING SHALL BE VERIFIED BY CONTRACTOR IN ORDER TO ENSURE THAT ON-SITE REQUIREMENTS ARE MET. ANY DISCREPANCIES MUST BE REPORTED TO THE ENGINEER PRIOR TO THE ORDERING OF ANY MATERIALS AND/OR THE COMMENCEMENT OF CONSTRUCTION.
6. THE POSITION AND DEPTH OF ALL EXISTING SERVICES ON AND OFF THE SITE WERE AFFECTED BY THE WORKS, SHALL BE CONFIRMED PRIOR TO THE COMMENCEMENT OF ANY CONSTRUCTION WORK ON THE INSTALLATION OF SERVICES. THE CONTRACTOR SHALL PROTECT ALL EXISTING SERVICES FROM DAMAGE THROUGHOUT CONSTRUCTION.
7. THE CONTRACTOR MUST IMMEDIATELY NOTIFY THE ENGINEER OF ANY EXISTING SERVICES FOUND WHICH ARE NOT INDICATED ON THE DRAWINGS.

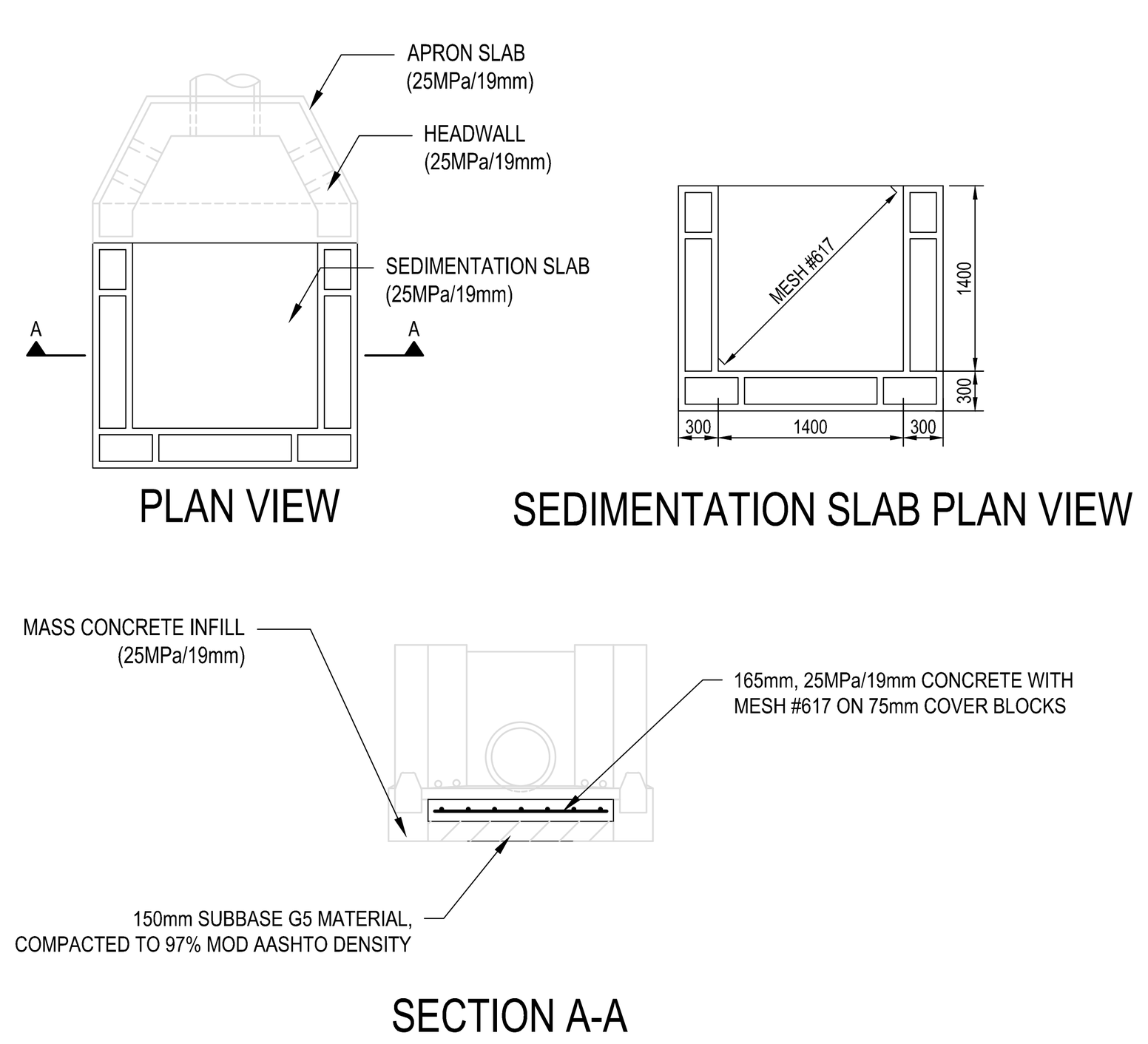

REINFORCING DETAILS 2:
APRON SLAB - Ø525mm PIPE INLET STRUCTURE
SCALE 1:50

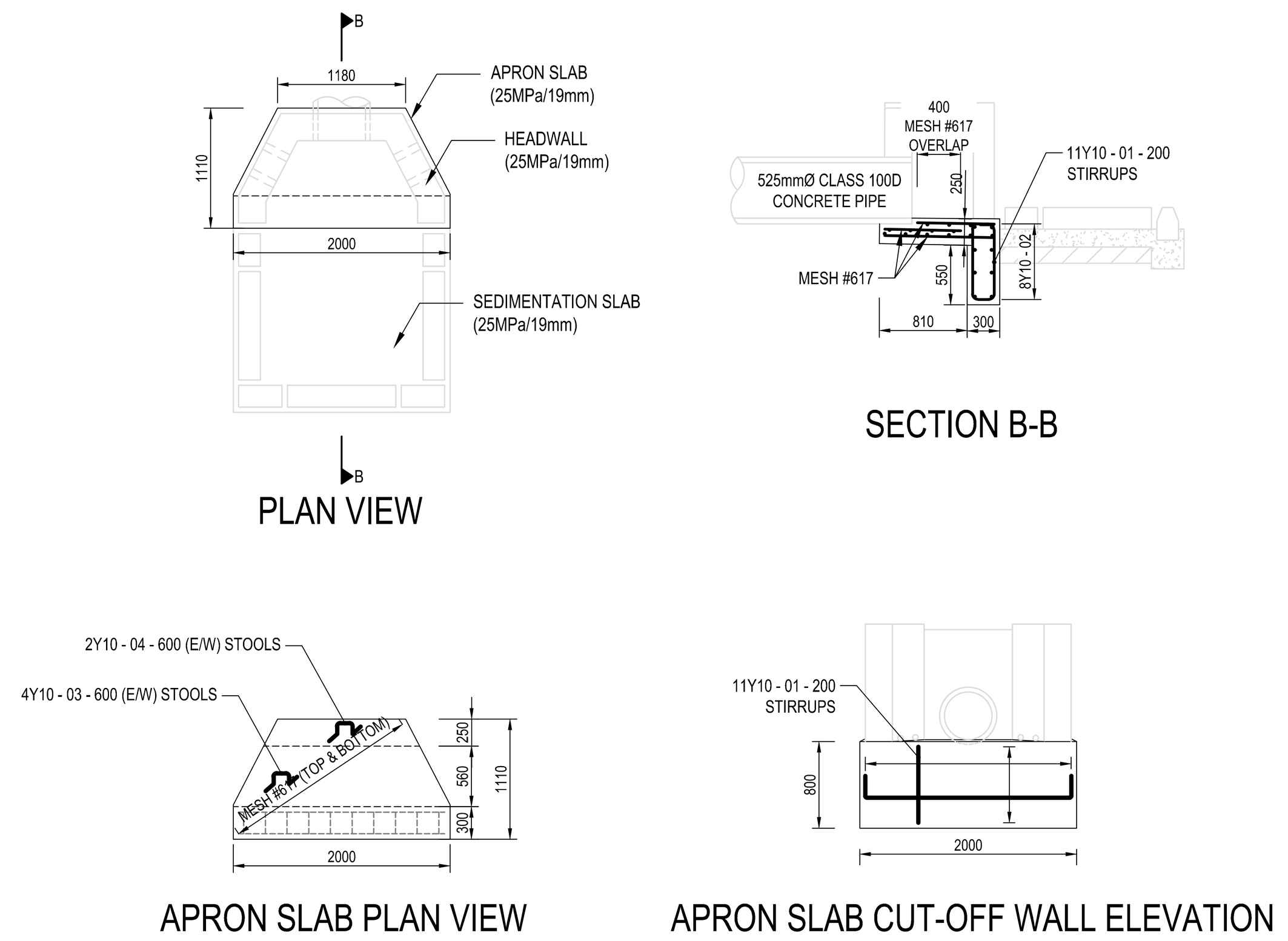

REINFORCING DETAILS 2:
SEDIMENTATION SLAB - Ø525mm PIPE INLET STRUCTURE
SCALE 1:50

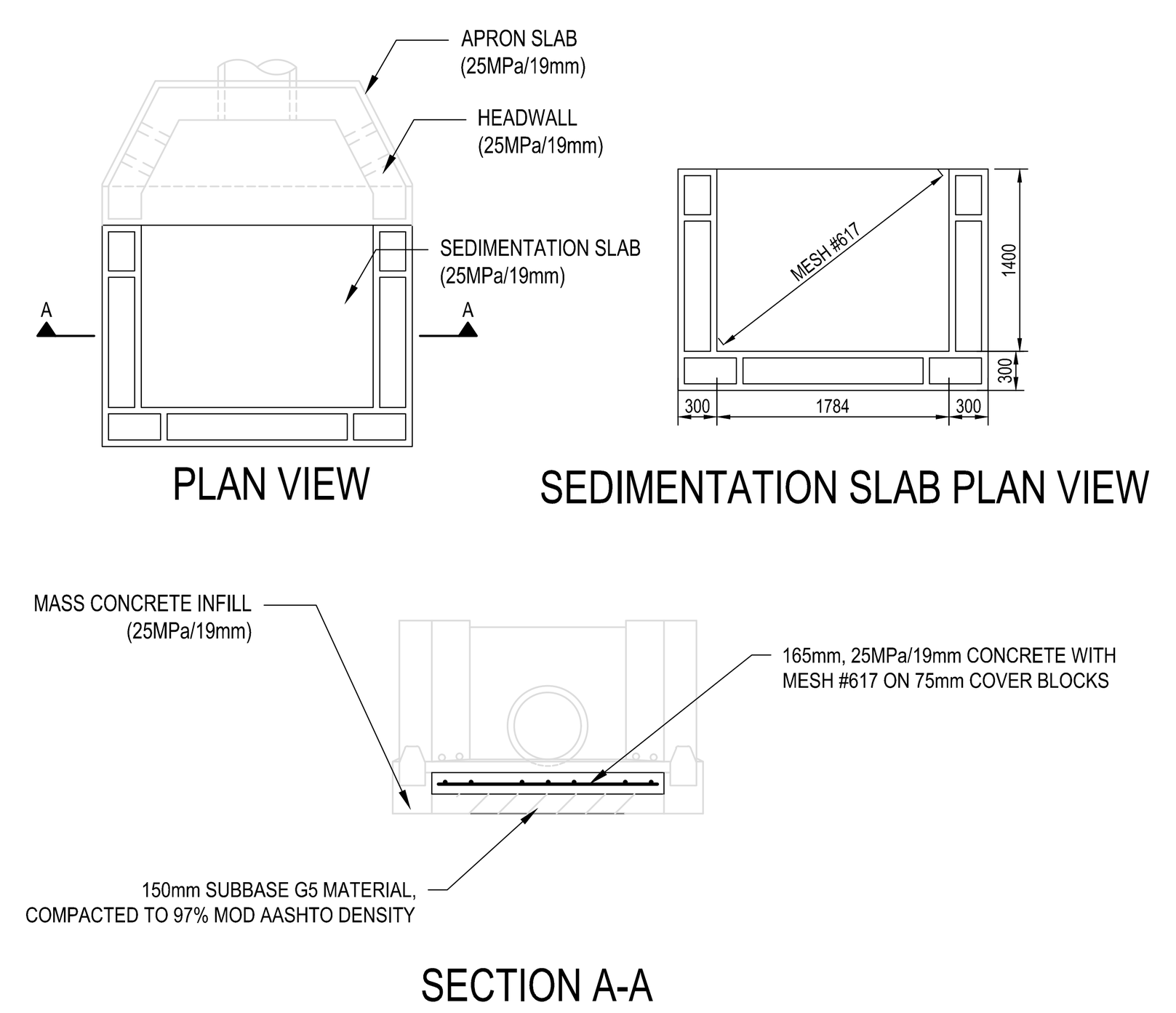

REINFORCING DETAILS 3:
APRON SLAB - Ø600mm PIPE INLET STRUCTURE
SCALE 1:50

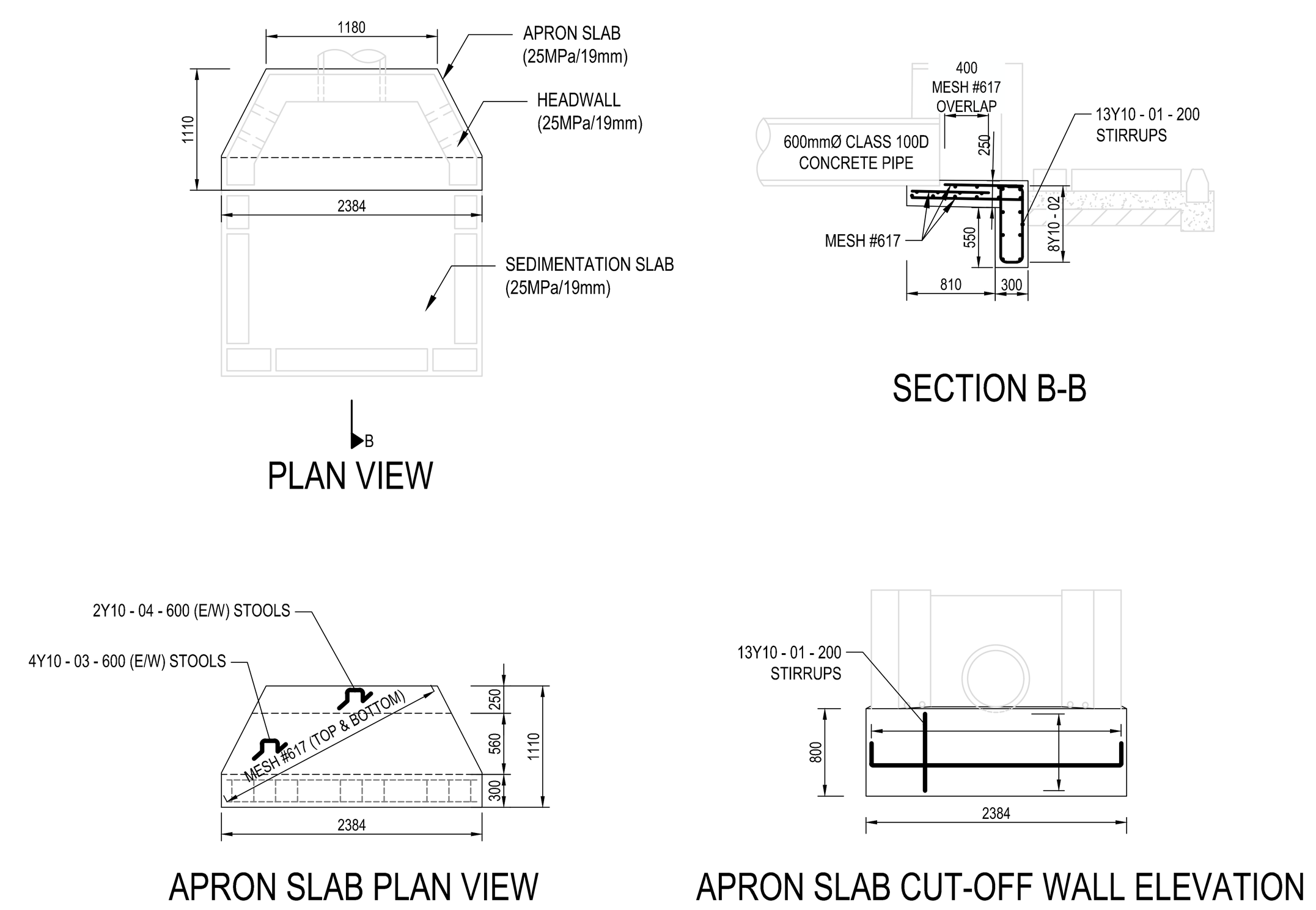

REINFORCING DETAILS 3:
SEDIMENTATION SLAB - Ø600mm PIPE INLET STRUCTURE
SCALE 1:50

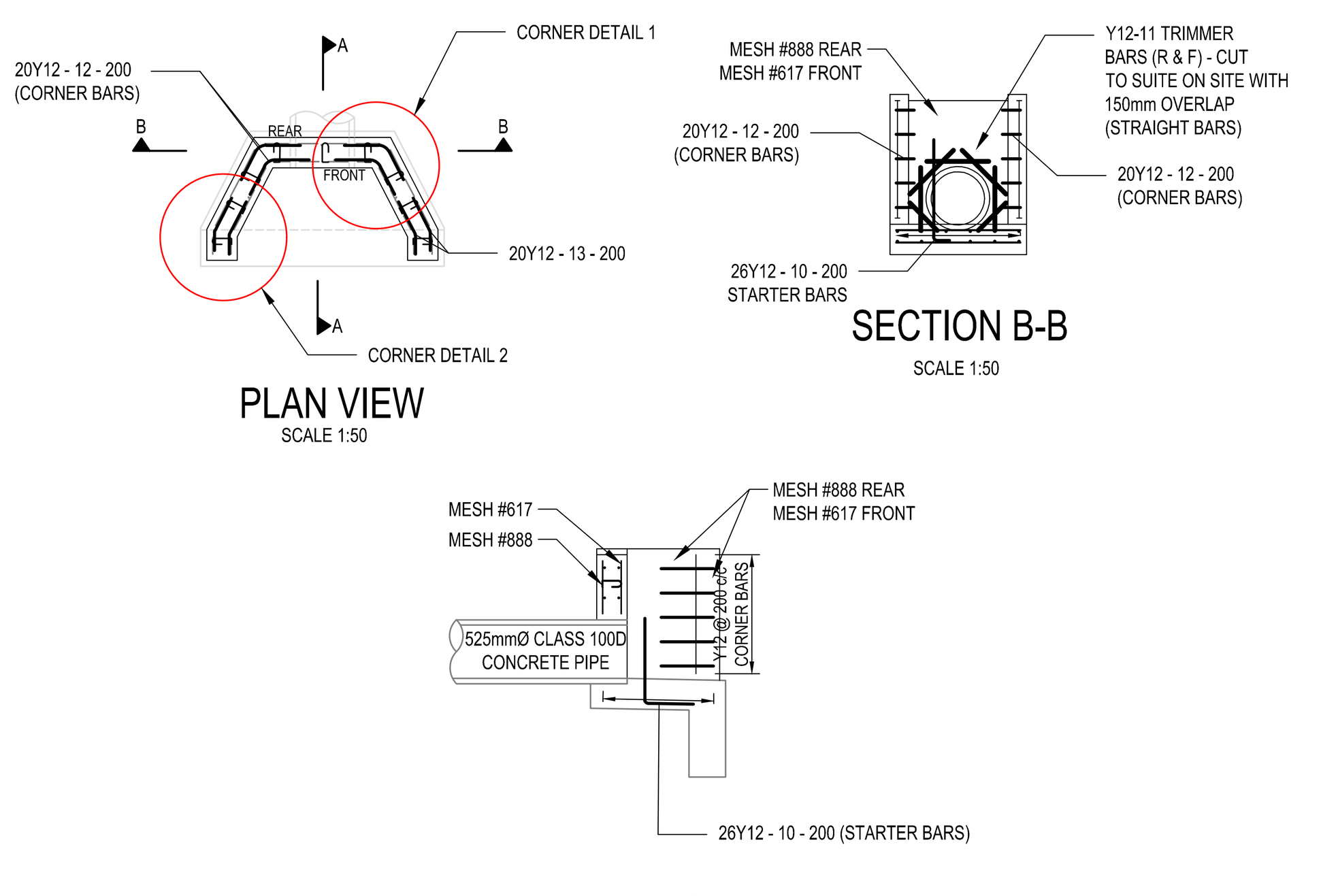

REINFORCING DETAILS 2:
HEADWALL & WINGWALL - Ø525mm PIPE INLET STRUCTURE
SCALE 1:50

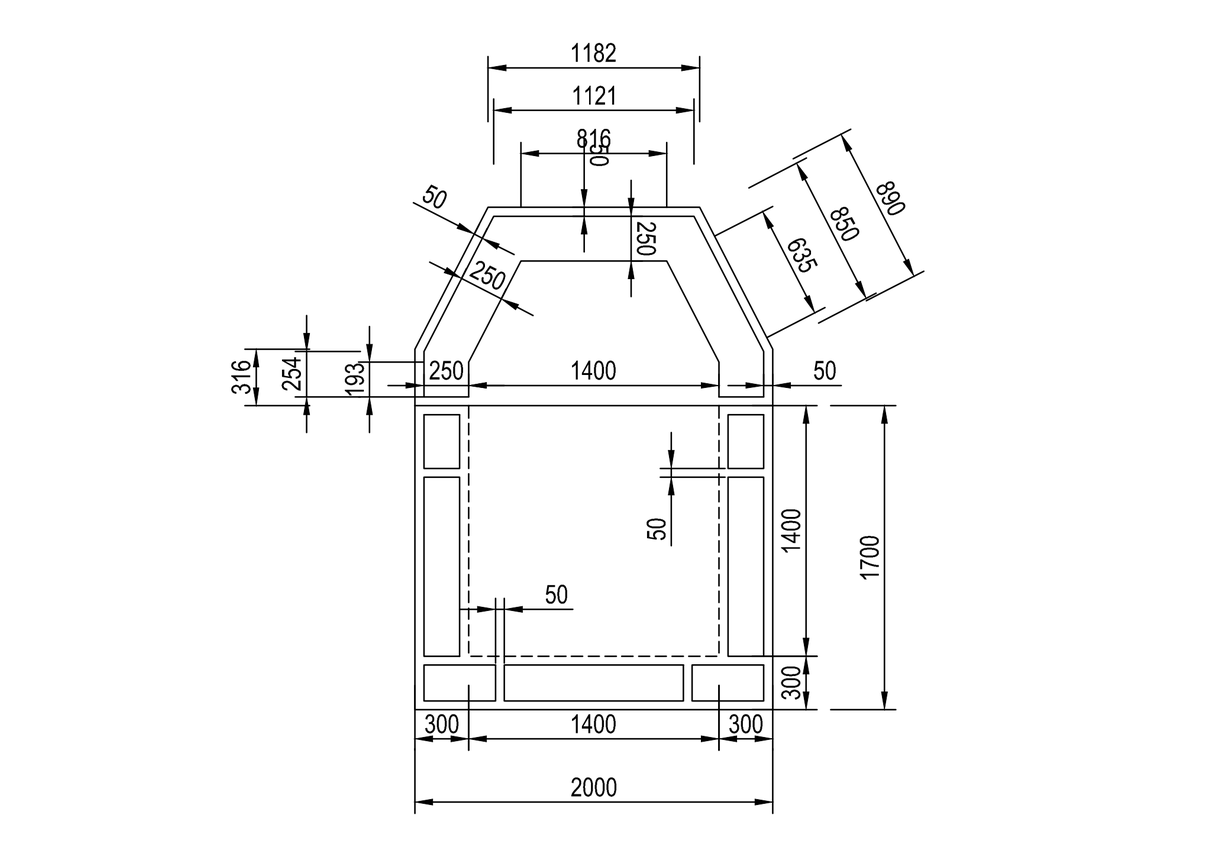

SETTING OUT: Ø525mm PIPE INLET STRUCTURE
SCALE 1:50

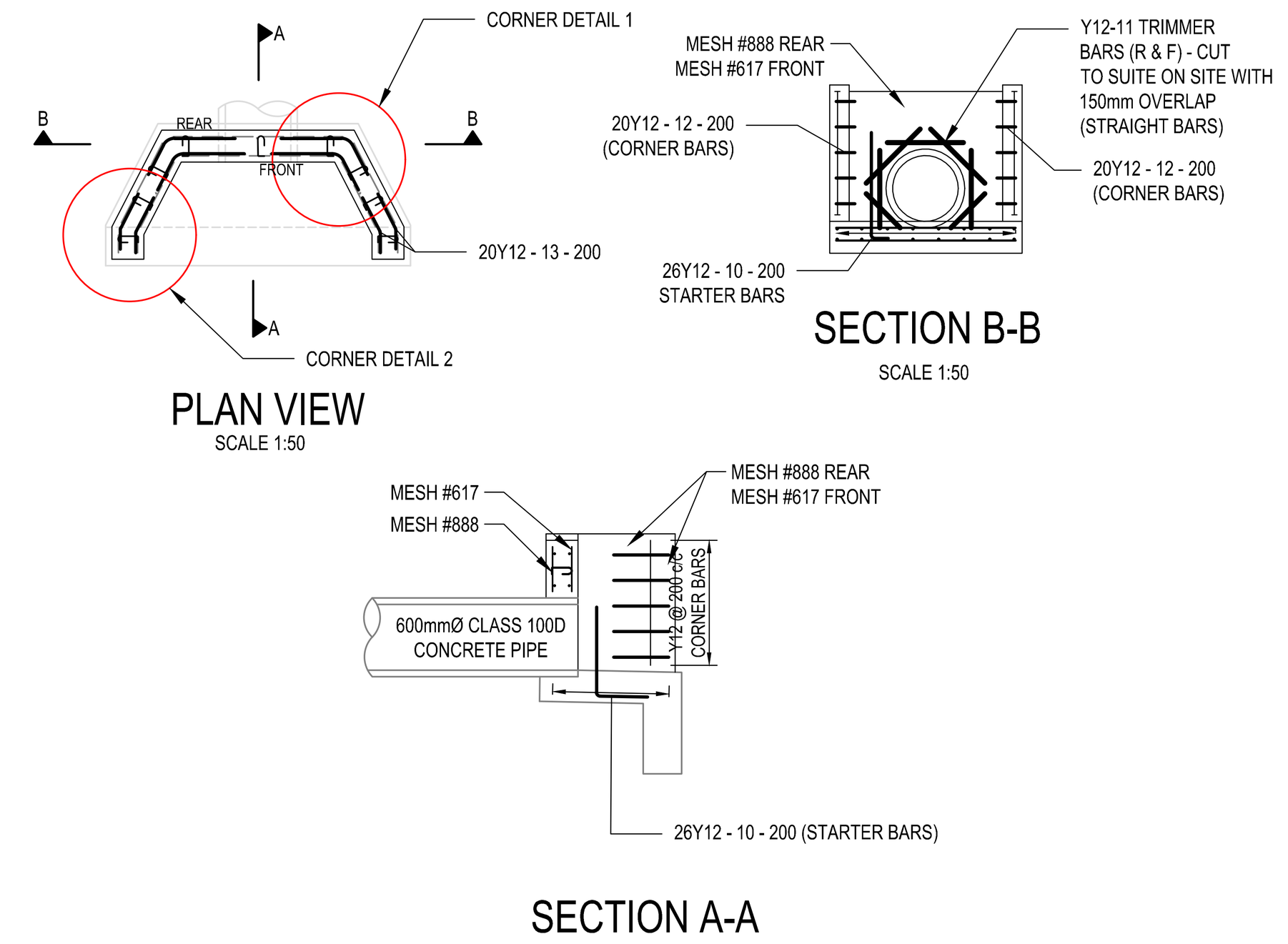

REINFORCING DETAILS 3:
HEADWALL & WINGWALL - Ø600mm PIPE INLET STRUCTURE
SCALE 1:50

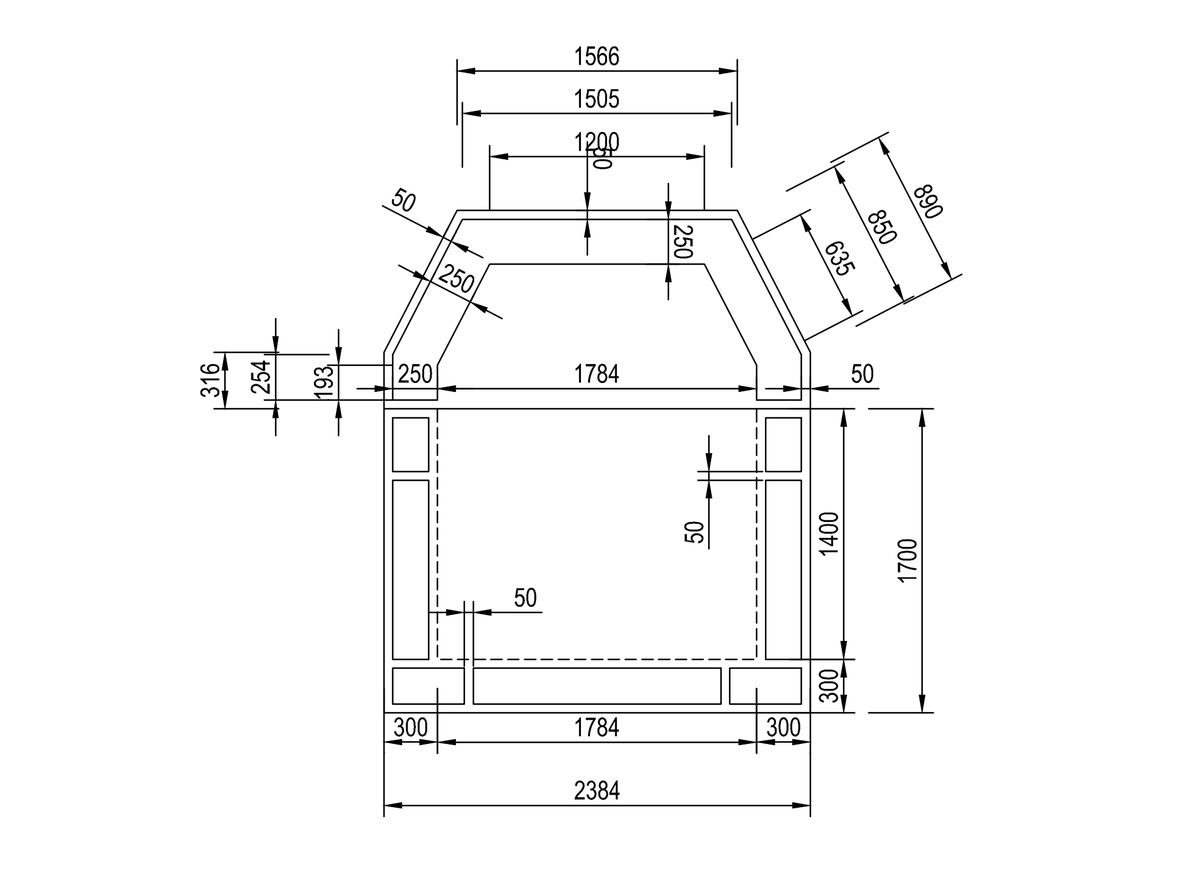

SETTING OUT: Ø600mm PIPE INLET STRUCTURE
SCALE 1:50

NOTES / LEGEND

APPROVED BY COUNCIL / CLIENT

CITY ENGINEER / CLIENT — REG. NO. — DATE

AMENDMENTS CODE

A,B,C... / : BEFORE TENDER
T0 / : TENDER DRAWING
0,1,2,3.../ : AFTER TENDER
Z / : AS BUILT

/A : BY CLIENT
/B : BY ARCHITECT
/C : BY MECHANICAL OR ELECTRICAL
/D : BY BVi
/E : BY OTHER ( )

DATE	INITIAL	No./CODE	REVISION DESCRIPTION
12/02/2026	FMG	T0/D	ISSUE FOR TENDER

CLIENT: STELLENBOSCH MUNICIPALITY • UMASIPALA • MUNISIPALITEIT

• ENGINEERING • PROCUREMENT • MANAGEMENT — 50 YEAR CELEBRATION EST 1967-2017

Registration no. 1998/000157/07

PROVINCE	OFFICE	☎	E-MAIL
Gauteng	Pretoria	(012) 940-1111	pta@bvigp.co.za
	Polokwane	(015) 291-5400	js@bvilp.co.za
Free State	Bloemfontein	(051) 447-2137	bfn@bvifs.co.za
	Welkom	(057) 353-2499	wel@bvifs.co.za
Northern Cape	Upington	(054) 337-6600	upt@bvinc.co.za
	Springbok	(027) 712-3614	spk@bvinc.co.za
KwaZulu Natal	Durban	(031) 266-8382	dbn@bvikn.co.za
	Empangeni	(035) 772-6112	emp@bvikn.co.za
Eastern Cape	Port Elizabeth	(041) 373-4343	bviec@mweb.co.za
	East London	(043) 735-3889	lbk@bviec.co.za
Western Cape	Cape Town	(021) 527-7000	cpt@bviwc.co.za

Visit or contact us online at www.bvigroup.co.za

PROJECT: REALIGNMENT OF THE R44/R310 AND ALEXANDER STREET INTERSECTION

DRAWING TITLE: STANDARD DETAILS STORMWATER

APPROVED BY BVi: ENGINEER/TECHNOLOGIST — REG. NO. — DATE

SCALE	AS SHOWN @A0	DRAWN	NADIR FALA
DESIGNED	FM GREEFF	CHECKED	FM GREEFF
PLAN NUMBER		REVISION NO.	DATE SAVED
34092.00-121-02		T0	15 August 2025

34092.00-121-01-REVT0_(STANDARD DETAILS STORMWATER).DWG

O:\PROJECTS DRAWINGS\34000 - 34999\34092.00\CIVIL\TENDER DRAWINGS\34092.00-121-01-REVT0_(STANDARD DETAILS STORMWATER).DWG

0 10 50 100

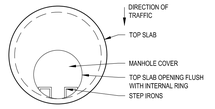

PLAN VIEW: TYPICAL INSTALLATION

MANHOLE DIAMETER TABLE		
MAIN PIPE	JUNC. PIPE	MANHOLE DIA.
160-250	160-200	1000
275-325	160-250	1200
350-400	160-225	1200
425	160-300	1500
450-525	160-275	1500
550-575	160-250	1500
600	160-250	1500
625-650	160-325	1800
675-725	160-300	1800
750-800	160-275	1800
800-900	160-250	1800

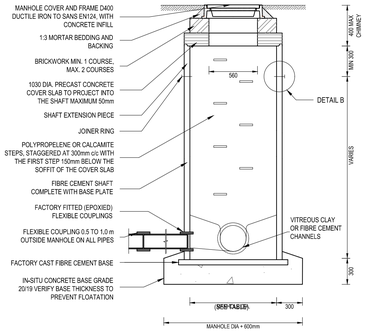

NOTE:
1. REFER TO SABS 1200 LD FOR SPECIFICATIONS AND ITEMS NOT INDICATED
2. FOR SEALING SPECIFICATIONS REFER TO THE TEXT PORTION OF THE CITY'S STANDARD SPECIFICATIONS
3. CHECK MANHOLE DIAMETER BASED ON CHANNEL LAYOUT WITH CENTRE LINE RADII OF ALL CHANNELS > 2 X DIAMETER
4. CHECK/DETERMINE CONCRETE BASE THICKNESS TO PREVENT FLOTATION
5. STEP IRONS SHALL BE ON THE DOWNSTREAM SIDE OF THE MANHOLE AND HINGES FOR THE COVER ON THE UPSTREAM END
6. ALL MANHOLES IN PAVED AREAS TO HAVE A 150mm CONCRETE SLAB SURROUND

STORMWATER MANHOLE - FIBRE CEMENT TYPE

SCALE 1:25

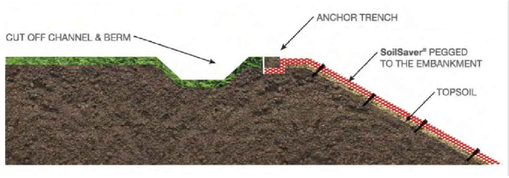

TYPICAL JUTE SOIL SAVER INSTALLATION TO STABILISE EMBANKMENTS

SCALE 1:20

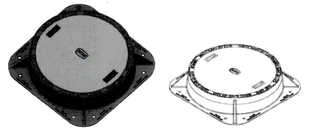

RENDERED COVER AND FRAME

ASSEMBLED COVER AND FRAME

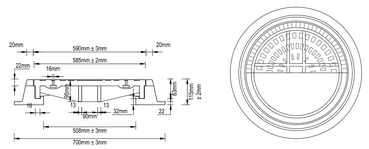

HEAVY DUTY SEWER MANHOLE COVER & FRAME

SCALE 1:10

COMPONENT DETAILS & SPECIFICATIONS					
NO.	COMPONENT	APPROX. WEIGHT	SIZE	MATERIAL	CLASSIFICATION
1	FRAME	48 kg	800mm x 800mm x 150mm (L x W x H)	DUCTILE IRON	CLASS D400 (400 kN)
2	COVER	48 kg	694mmØ : 100mm (H)	DUCTILE IRON	CLASS D400 (400 kN)
3	CONCRETE IN-FILL	53 kg	VOL. = 0.022 m3	CONCRETE	(45MPa 28-DAY COMPRESSIVE STRENGTH)

NOTES:
1. THE COVER AND FRAME SHALL CONFORM TO THE LATEST SANS 50124.
2. DUCTILE IRON SHALL CONFORM TO THE LATEST SANS 936.

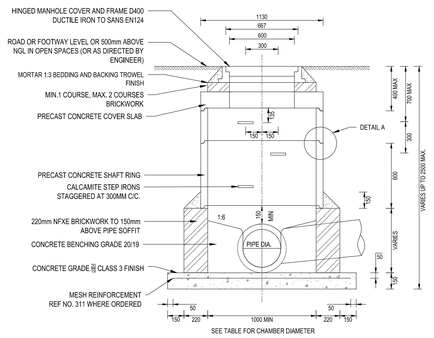

TYPICAL SECTION

SEE TABLE FOR CHAMBER DIAMETER

MANHOLE DIAMETER TABLE	
PIPE DIAMETER	CHAMBER DIAMETER
375	1000
450	1000
525	1250
600	1250

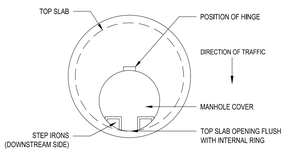

PLAN VIEW: TYPICAL INSTALLATION

SCALE 1:20

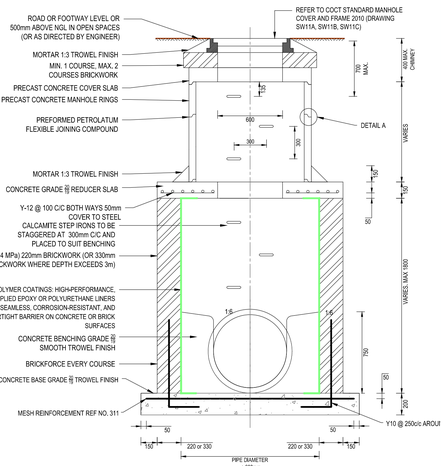

STORMWATER MANHOLE FOR 675mm Ø PIPES AND LARGER (IN PERCHED WATER TABLE AREAS)

SCALE 1:20

NOTE:
1. REFER TO SABS 1200 LE FOR SPECIFICATIONS AND ITEMS NOT INDICATED
2. MIN. CL RADIUS OF BENCHING 2.5 X PIPE DIAMETER
3. CHIMNEY OPENING TO BE PLACED AS CLOSE TO CENTRE LINE OF THE MAIN INCOMING AND OUTGOING PIPE AS POSSIBLE
4. BRICKWORK- SEE SPECIFICATIONS FOR MASONRY UNITS. MIN. STANDARD DOCUMENT P.10.4.10
5. MORTAR FOR BRICKWORK TO BE 1:3

STORMWATER MANHOLE FOR 600mmØ PIPES AND SMALLER

SCALE 1: 20



TYPICAL SECTION OF MANHOLES IN PAVED AREAS

SCALE 1:25

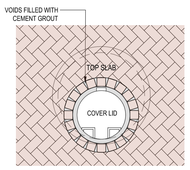

PLAN VIEW: TYPICAL CONSTRUCTION OF MANHOLES IN PAVED AREAS

SCALE 1:25

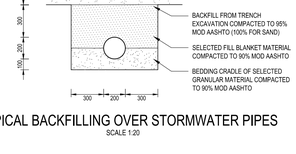

TYPICAL BACKFILLING OVER STORMWATER PIPES

SCALE 1:20

MANHOLE LIFTING DETAIL

SCALE 1:25

PLAN VIEW: TYPICAL CONSTRUCTION OF MANHOLES IN PAVED AREAS

SCALE 1:25

BACKFILLING OVER RIGID PIPELINE (HARD LANDSCAPING/ROADWAY)

SCALE 1:20

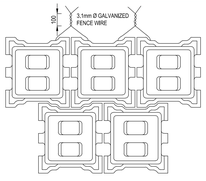

ARMORFLEX FIXING DETAIL

NTS

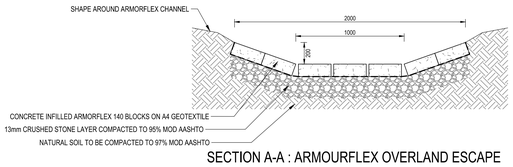

SECTION A-A : ARMOURFLEX OVERLAND ESCAPE

SCALE 1:20

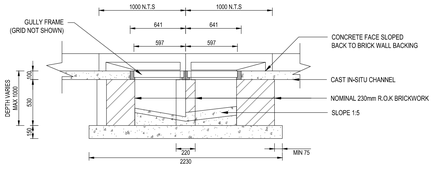

SECTION A-A

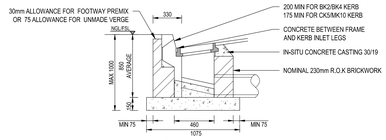

SECTION B-B

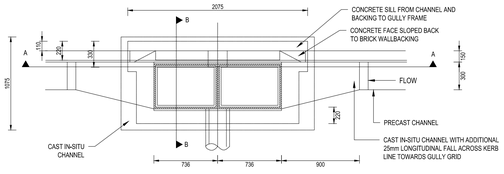

PLAN (GULLY GRIDS NOT SHOWN) GRID GULLY WITH KERB INLET

DOUBLE KERB INLET - GULLY GRID CATCHPIT FOR BK2/C1

SCALE 1:25

NOTE:
1. HINGES OF COVERS TO OPEN TOWARDS SIDEWALK AND NOT TOWARDS THE ROAD
2. MAX DEPTH TO BE 1m
3. BRICKWORK- SEE SPECIFICATIONS FOR MASONRY UNITS MIN. STANDARD DOCUMENT P.10.4.10
4. IN THE CASE OF ROLL OVER KERBS E.G. CK5 USE STANDARD PRECAST INLET KERB 1300mm LONG WITH 450mm OPENINGS

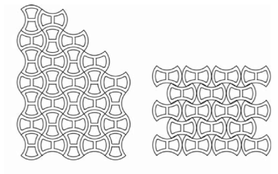

± 10 blocks per sq.m

± 9 blocks per sq.m

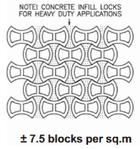

± 7.5 blocks per sq.m

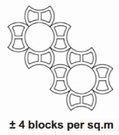

± 4 blocks per sq.m

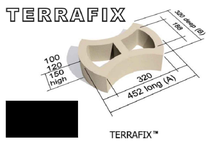

TERRAFIX™

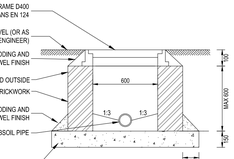

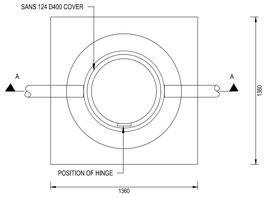

NOTES:
1. BENCHING REQUIRED TO PREVENT STANDING WATER
2. BRICKWORK - SEE SPECIFICATIONS FOR MASONRY UNITS MIN. STANDARD DOCUMENT P.10.4.10
3. MORTAR FOR BRICKWORK TO BE 1:3

ACCESS MANHOLE FOR SHALLOW SUB SOIL DRAINS

SCALE 1:20

NOTES / LEGEND

APPROVED BY COUNCIL / CLIENT

CITY ENGINEER / CLIENT — REG. NO. — DATE

AMENDMENTS CODE

A,B,C... / BEFORE TENDER
T0 / TENDER DRAWING
T1,T2,... / AFTER TENDER
Z / AS BUILT

A: BY CLIENT
B: BY ARCHITECT
C: BY MECHANICAL OR ELECTRICAL
D: BY SH
E: BY OTHER ( )

DATE	INITIAL	No./CODE	REVISION DESCRIPTION
12/02/2026	FMG	T2/D	ISSUED FOR TENDER

CLIENT

STELLENBOSCH
STELLENBOSCH • IDYANI • KWANOBUHLE
MUNICIPALITY • UMASIPALA • MUNISIPALITEIT

bvi 50 YEARS CELEBRATION EST 1967-2017
• ENGINEERING • PROCUREMENT • MANAGEMENT
Registration No. 1966/007707

PROVINCE	OFFICE	☎	E-MAIL
Gauteng	Pretoria	(012) 940-1111	pta@bvi.co.za
	Polokwane	(015) 291-5400	plk@bvi.co.za
Free State	Bloemfontein	(051) 447-2121	bfn@bvi.co.za
	Welkom	(057) 353-2400	wel@bvi.co.za
Northern Cape	Upington	(054) 337-4600	upt@bvi.co.za
	Springbok	(027) 712-8014	spb@bvi.co.za
KwaZulu-Natal	Durban	(031) 266-6582	dbn@bvi.co.za
	Empangeni	(035) 772-6710	emp@bvi.co.za
Eastern Cape	Port Elizabeth	(041) 373-4043	hms@bvi.co.za
	East London	(043) 726-0800	bfn@bvi.co.za
Western Cape	Cape Town	(021) 527-7000	cpt@bvi.co.za

Visit or contact us online at www.bviglobal.co.za

PROJECT

REALIGNMENT OF THE R44/R310 AND ALEXANDER STREET JUNCTION

DRAWING TITLE

SPECIFIC STORMWATER DETAILS

APPROVED BY BVI

ENGINEER/TECHNOLOGIST — REG. NO. — DATE

SCALE	AS SHOWN @ A0	DRAWN	NF
DESIGNED	FMG	CHECKED	LP

PLAN NUMBER	REVISION NO.	DATE SAVED
34092.00-123-01	T0	12 February 2026

O:\PROJECTS DRAWINGS\34000 - 34999\34092.000\CIVIL\TENDER DRAWINGS\REVT1\34092.00-123-01-REVT1_(SPECIFIC STROMWATER STRUCTURES).DWG

34092.00-123-01-REVT1_(SPECIFIC STROMWATER STRUCTURES).DWG

0 10 50 100

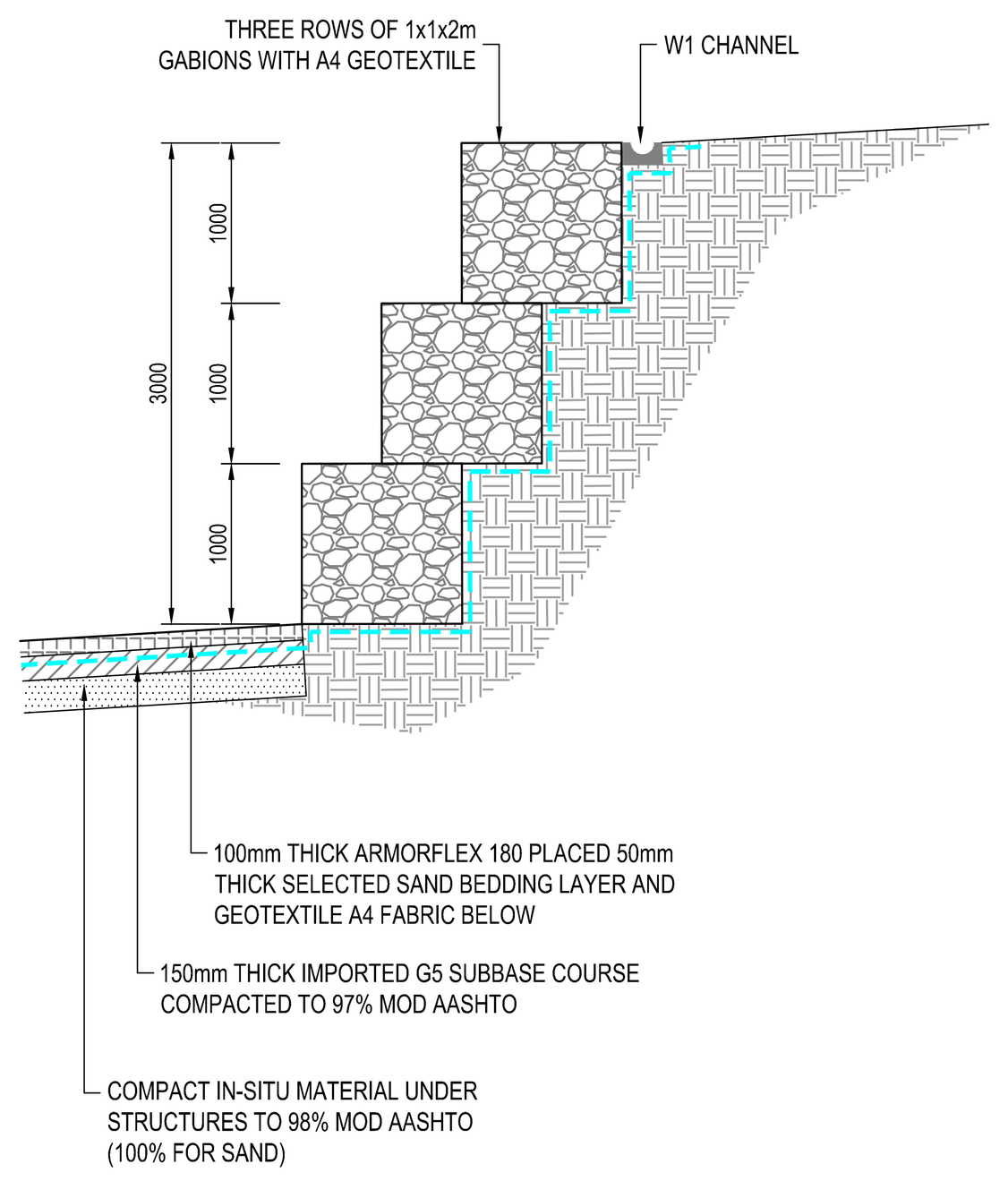

TYPICAL GABION RETAINING WALL (IF REQ.)
SECTION B-B
SCALE 1:50

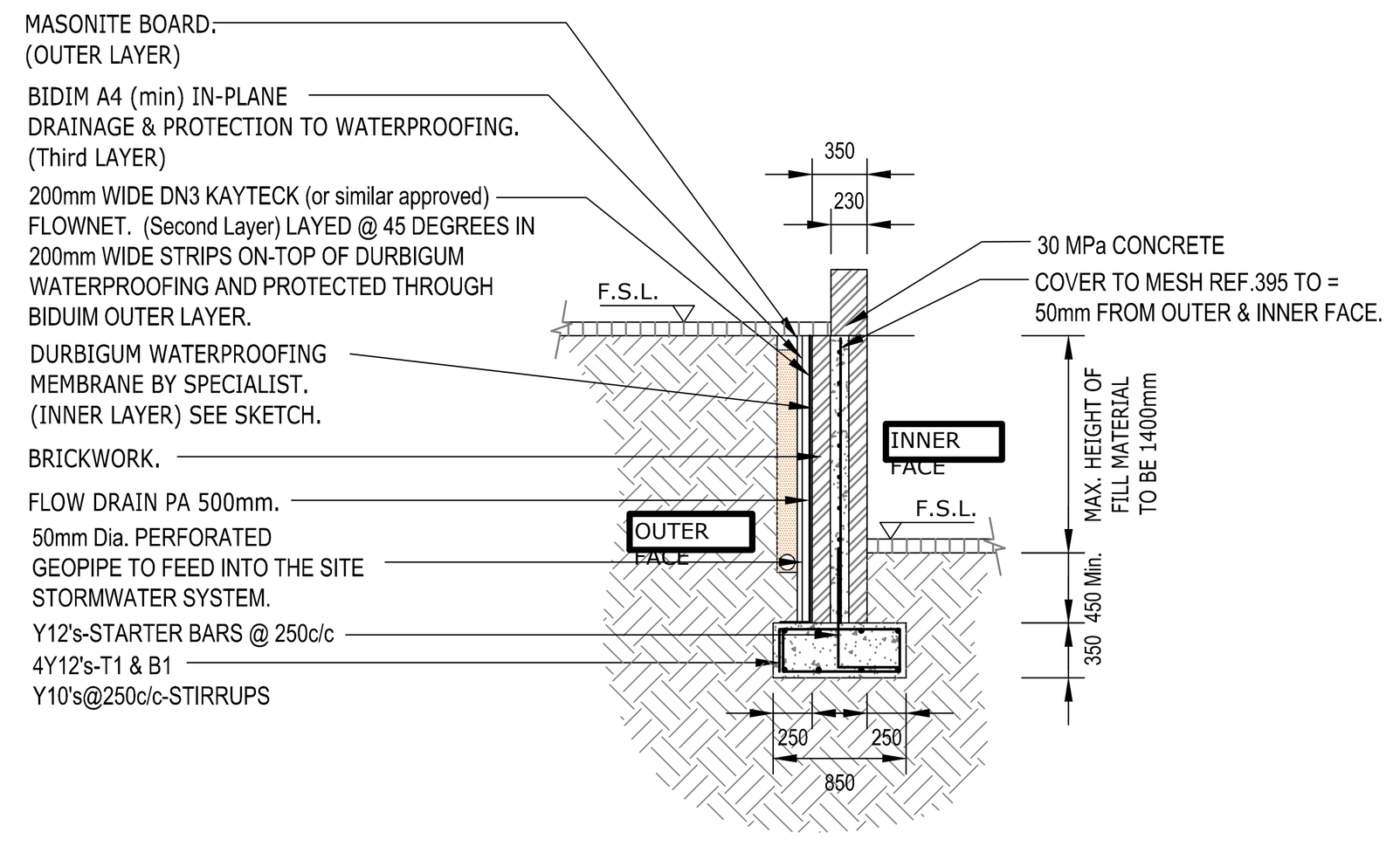

DETAIL A (IF REQ.)
TYPICAL CAVITY IN-FILL RETAINING WALL FOUNDATIONS
SCALE : 1:50

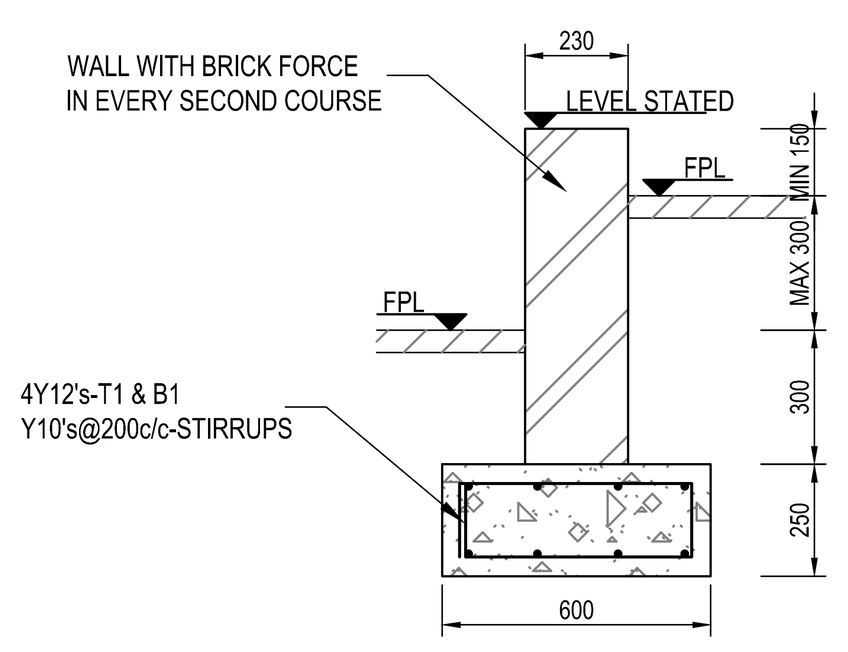

TYPICAL RETAINING WALL FOUNDATION DETAIL
SCALE 1 : 20

NOTES:
1. THE ABOVE DETAILS SHOULD BE CONSIDERED TYPICAL. SPECIFICATION MAY DIFFER, SHOULD SITE SPECIFIC CONDITIONS REQUIRE IT.
2. ALL BLOCKS TO COMPLY TO SANS 508:2020
3. THE BLOCK WALL SHOULD PREFERABLY HAVE A CLOSED FACE CONFIGURATION AND A SEGMENTAL BUILD-IN NIB. IF NO NIB PRESENT, GRANULAR STONE WILL BE USED AS INFILL TO ENSURE TO ENSURE INTERLOCK.
4. THIS DETAIL SHALL ONLY BE APPLICABLE FOR BLOCK RETAINING STRUCTURES WITH A VERTICAL HEIGHT OF UP TO 800MM WITH VERTICAL CREST AND 400MM WITH CREST SLOPE.
5. FOR WALLS HIGHER THAN THOSE IN NOTE 4, THE WALLS SHALL BE DESIGNED BY A PROFESSIONAL ENGINEER. DESIGN BY SUPPLIER SHALL NOT BE PERMITTED BEFORE TENDER.
6. BLOCKS SHALL EITHER BE FILLED WITH CONCRETE OR SUITABLE GRANULAR MATERIAL. THE APPROVAL AUTHORITY TO PROVIDE GUIDANCE IN THIS REGARD.
7. FOOTING SHALL CONSIST OF A COMPACTED BASE (1 CEMENT : 2 SAND : 3 STONE), UNLESS ADVISED OTHERWISE.
8. HORIZONTAL STEP/ SETBACK SHALL BE IN ACCORDANCE WITH THE MANUFACTURER'S SPECIFICATIONS, BUT SHOULD NEVER BE LESS THAN 50MM.
9. SURBSURFACE DRAIN: 75Ø HDPE DOUBLE WALLED SLOTTED PIPE(SLOTS AT TOP), WITH 20Ø WEEPHOLES @ 2M C/C. PIPE TO BE SURROUNDED WITH 13MM CRUSHED STONE, WRAPPED INSIDE A GEOTEXTILE (GRADE A2). FOR HIGHER GROUND WATER, SEE NCMA MANUAL FOR SEGMENTAL RETAINING WALLS. FOR WALLS LOWER THAN 400MM IN HEIGHT SUBSURFACE DRAINS MAY BE OMITTED.
10. WHERE THE VERTICAL HEIGHT/ DROP EXCEEDS 500MM, FENCE AND/OR HANDRAILS SHALL BE PROVIDED BEHIND THE EDGING, IN ORDER TO ENSURE PUBLIC SAFETY.

GENERAL NOTES:

1. ALL WORK TO BE DONE IN ACCORDANCE WITH SABS/SANS1200 & THE PROJECT SPECIFICATIONS.
2. ALL LEVELS ARE IN METERS ABOVE MEAN SEA LEVEL UNLESS OTHERWISE STATED.
3. DO NOT SCALE. USE FIGURED DIMENSIONS ONLY. ALL LEVELS TO BE CHECKED BEFORE CONSTRUCTION COMMENCES AND DISCREPANCIES REPORTED TO THE ENGINEER.
4. THESE DRAWING SHALL BE READ IN CONJUNCTION WITH THE ARCHITECTS DRAWINGS (IF APPLICABLE).
5. ALL SETTING OUT COORDINATES AND DIMENSIONS SHOWN ON THIS DRAWING SHALL BE VERIFIED BY CONTRACTOR IN ORDER TO ENSURE THAT ON-SITE REQUIREMENTS ARE MET. ANY DISCREPANCIES MUST BE REPORTED TO THE ENGINEER PRIOR TO THE ORDERING OF ANY MATERIALS AND/OR THE COMMENCEMENT OF CONSTRUCTION.
6. THE POSITION AND DEPTH OF ALL EXISTING SERVICES ON AND OFF THE SITE WERE AFFECTED BY THE WORKS, SHALL BE CONFIRMED PRIOR TO THE COMMENCEMENT OF ANY CONSTRUCTION WORK ON THE INSTALLATION OF SERVICES. THE CONTRACTOR SHALL PROTECT ALL EXISTING SERVICES FROM DAMAGE THROUGHOUT CONSTRUCTION.
7. THE CONTRACTOR MUST IMMEDIATELY NOTIFY THE ENGINEER OF ANY EXISTING SERVICES FOUND WHICH ARE NOT INDICATED ON THE DRAWINGS.

DEMOLITION NOTES:

1. ALL DEMOLITION WORKS TO BE DONE IN ACCORDANCE WITH RELEVANT SECTIONS OF SANS 1200C.
2. THE CONTRACTOR WILL PRIOR TO THE START OF CONSTRUCTION AND/OR DEMOLITION WORKS CHECK AND EXPOSE TIE-IN POINTS AND VERIFY ALL EXISTING SERVICES INVERT LEVELS AND EXTENT OF EXISTING UNDERGROUND SERVICES.
3. ALL EXISTING MANHOLES AND VALVE CHAMBERS OR STRUCTURES SITUATED IN THE DEMOLITION AREA SHALL BE SAFEGUARDED DURING THE DEMOLITION WORKS.
4. ALL EXISTING FIXTURES (ROAD SIGNS, BENCHES, POSTS, ETC) SITUATED IN THE DEMOLITION WORKS AREA SHALL BE SAFELY REMOVED AND STORED FOR RE-USE, UNLESS OTHERWISE INSTRUCTED BY ENGINEER
5. DURING DEMOLITION WORK, ALL MECHANICAL SYSTEMS AND BUILDING SERVICES SERVING OCCUPIED AREAS SHALL BE MAINTAINED OPERATIONAL. WHERE SYSTEM OR SERVICE INTERRUPTIONS ARE REQUIRED, ALTERNATIVE ARRANGEMENTS MUST BE CONFIRMED WITH THE ENGINEER AND FACILITIES MANAGER PRIOR TO ANY DEMOLITION WORKS.
6. AREAS OF DEMOLITION ARE APPROXIMATE; IT IS THE CONTRACTOR'S RESPONSIBILITY TO COORDINATE DEMOLITION WITH EXISTING CONDITIONS & NEW CONSTRUCTION.
7. EXISTING SERVICES AND STRUCTURES TO REMAIN SHALL BE PROTECTED DURING DEMOLITION AND NEW WORK CONSTRUCTION ACTIVITIES. EXISTING FLOORING AND FINISHES TO REMAIN UNLESS OTHERWISE CONFIRMED BY THE ENGINEER.
8. THE EXTENT OF DEMOLITION INDICATED IS BASED ON AS BUILT DRAWINGS PROVIDED BY THE OWNER AND FIELD OBSERVATIONS. ANY DISCREPANCIES BETWEEN ACTUAL CONDITIONS AND THOSE INDICATED ARE TO BE BROUGHT TO THE ATTENTION OF THE ENGINEER AS SOON AS DISCREPANCIES ARE DISCOVERED, BEFORE DEMOLITION IS TO CONTINUE IN SUCH AREA.
9. DISPOSAL OF MATERIAL GENERATED FROM DEMOLITION WORKS SHALL BE SORTED AND DISPOSED OF AT A REGISTERED AND APPROVED DUMP FACILITY ACCORDING TO THE APPROVED DEMOLITION PLAN
10. ALL EXISTING PAVING BLOCKS AND PRECAST KERBS SHALL BE UPLIFTED AND TEMPORARILY STOCKPILED FOR RE-SUE, UNLESS OTHERWISE INSTRUCTED BY THE ENGINEER.
11. MATERIAL GENERATED FORM DEMOLITION WORKS TO STRUCTURAL ELEMENTS (SUCH AS BRICKS) SHALL BE STOCKPILED IN A SEPARATE TEMPORARY STOCKPILE FOR RE-USE. CRUSHING OF MATERIAL FOR RE-USE IN PERMANENT WORKS ONLY TO BE DONE ON APPROVAL OF THE ENGINEER AND APPROPRIATE TESTING.
12. NO TREES SHALL BE REMOVED OR TRIMMED UNLESS SO INSTRUCTED BY THE ENGINEER.
13. ALL TREE ROOTS BELOW NEW BUILDING FOOTPRINTS SHALL BE REMOVED TO A DEPTH OF 1.0M BELOW THE NEW FOUNDATION LEVELS. REINSTATEMENT OF THESE EXCAVATIONS SHALL BE DONE WITH MINIMUM G7 QUALITY MATERIAL COMPACTED TO 97% MDD (100% FOR SAND) TO ACHIEVE CBR OF 15% IN TOP 150mm.
14. ALL EXISTING UNDERGROUND SERVICES PROVIDING CONNECTIONS TO THE BUILDINGS WHICH SHALL BE DEMOLISHED WILL BE REMOVED. REINSTATEMENT OF THESE SERVICE TRENCHES SHALL BE DONE WITH MINIMUM G7 QUALITY MATERIAL COMPACTED TO 97% MDD (100% FOR SAND) TO ACHIEVE CBR OF 15% IN TOP 150mm.

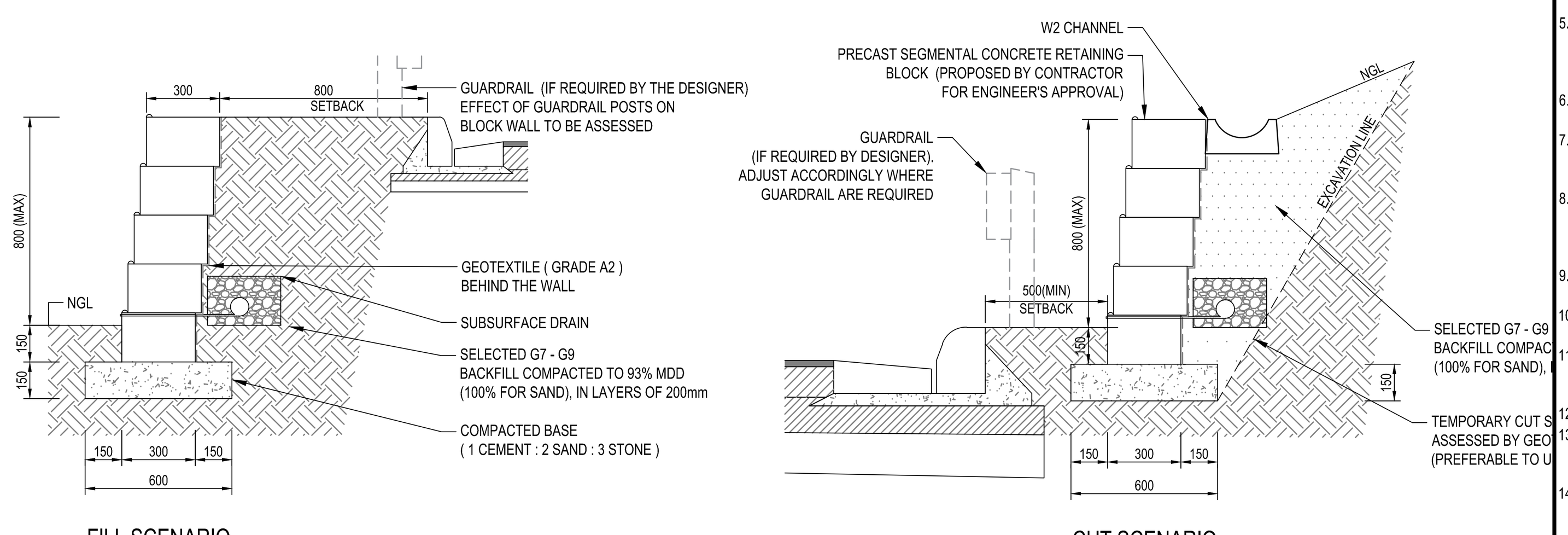

FILL SCENARIO

CUT SCENARIO
NOT PREFERRED

APPLICATION ALONG ROADWAYS
(NO NMT FACILITIES PRESENT)

SINGLE SEGMENTAL BLOCK RETAINING WALL ALONG ROADWAYS

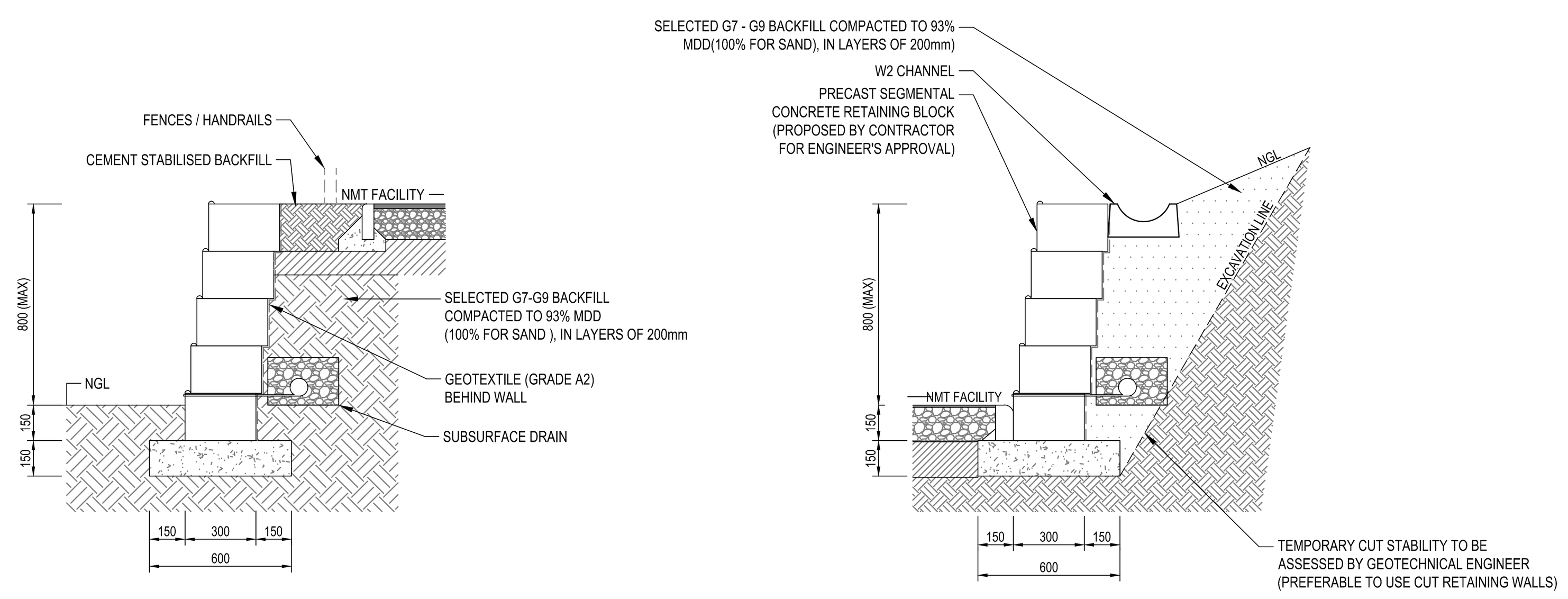

FILL SCENARIO

CUT SCENARIO

APPLICATION ALONG NMT FACILITIES

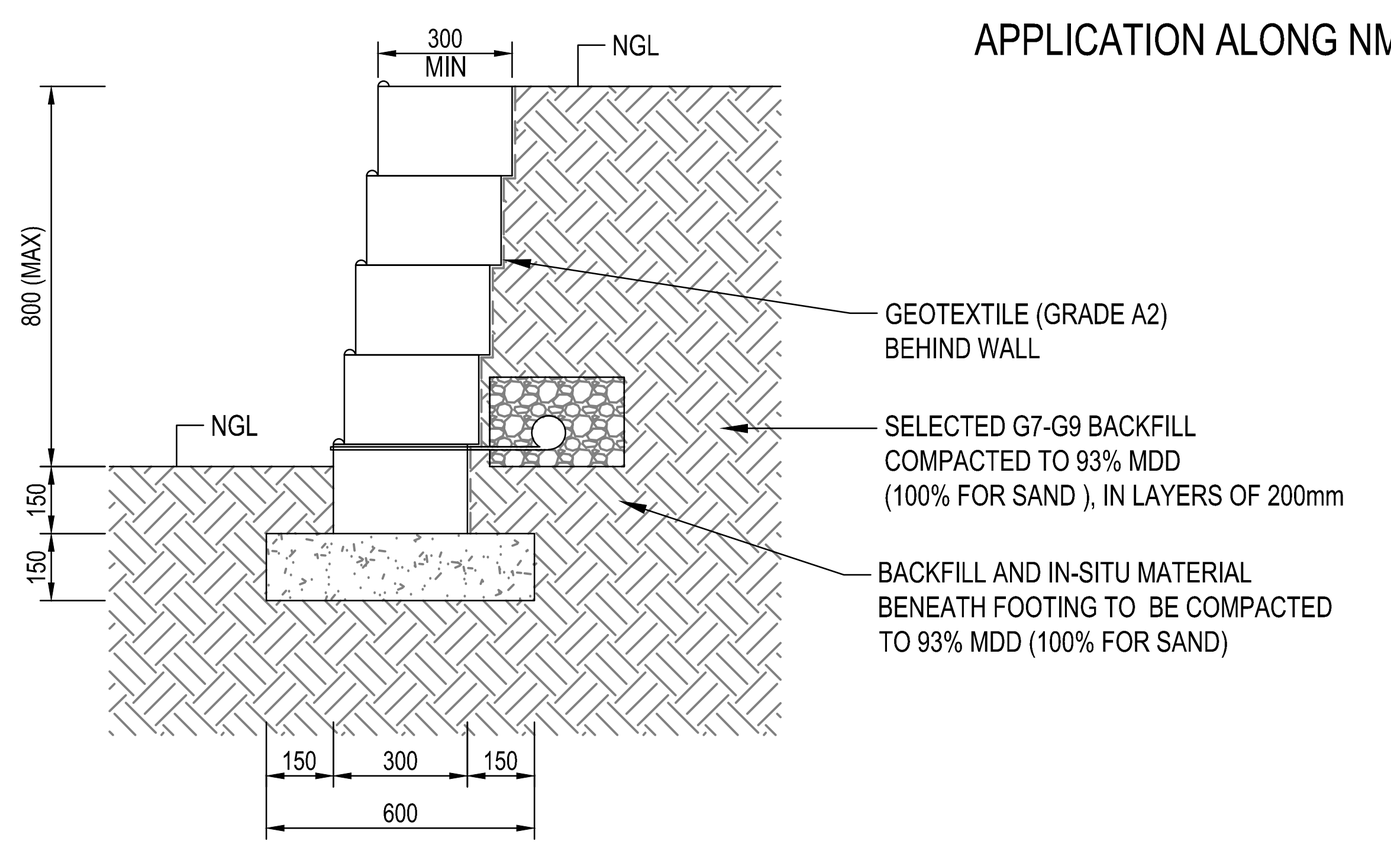

GENERAL APPLICATION

SINGLE SEGMENTAL BLOCK RETAINING WALL ALONG FACILITIES & GENERAL
SCALE 1:20

RETAINING WALL NOTES:
1. THE ABOVE DETAILS SHOULD BE CONSIDERED TYPICAL. SPECIFICATION MAY DIFFER, SHOULD SITE SPECIFIC CONDITIONS REQUIRE IT.
2. ALL BLOCKS TO COMPLY TO SANS 508:2020
3. THE BLOCK WALL SHOULD PREFERABLY HAVE A CLOSED FACE CONFIGURATION AND A SEGMENTAL BUILD-IN NIB. IF NO NIB PRESENT, GRANULAR STONE WILL BE USED AS INFILL TO ENSURE TO ENSURE INTERLOCK.
4. THIS DETAIL SHALL ONLY BE APPLICABLE FOR BLOCK RETAINING STRUCTURES WITH A VERTICAL HEIGHT OF UP TO 800MM WITH VERTICAL CREST AND 400MM WITH CREST SLOPE.
5. FOR WALLS HIGHER THAN THOSE IN NOTE 4, THE WALLS SHALL BE DESIGNED BY A PROFESSIONAL ENGINEER. DESIGN BY SUPPLIER SHALL NOT BE PERMITTED BEFORE TENDER.
6. BLOCKS SHALL EITHER BE FILLED WITH CONCRETE OR SUITABLE GRANULAR MATERIAL. THE APPROVAL AUTHORITY TO PROVIDE GUIDANCE IN THIS REGARD.
7. FOOTING SHALL CONSIST OF A COMPACTED BASE (1 CEMENT : 2 SAND : 3 STONE), UNLESS ADVISED OTHERWISE.
8. HORIZONTAL STEP/ SETBACK SHALL BE IN ACCORDANCE WITH THE MANUFACTURER'S SPECIFICATIONS, BUT SHOULD NEVER BE LESS THAN 50MM.
9. SURBSURFACE DRAIN: 75Ø HDPE DOUBLE WALLED SLOTTED PIPE(SLOTS AT TOP), WITH 20Ø WEEPHOLES @ 2M C/C. PIPE TO BE SURROUNDED WITH 13MM CRUSHED STONE, WRAPPED INSIDE A GEOTEXTILE (GRADE A2). FOR HIGHER GROUND WATER, SEE NCMA MANUAL FOR SEGMENTAL RETAINING WALLS. FOR WALLS LOWER THAN 400MM IN HEIGHT SUBSURFACE DRAINS MAY BE OMITTED.
10. WHERE THE VERTICAL HEIGHT/ DROP EXCEEDS 500MM, FENCE AND/OR HANDRAILS SHALL BE PROVIDED BEHIND THE EDGING, IN ORDER TO ENSURE PUBLIC SAFETY.

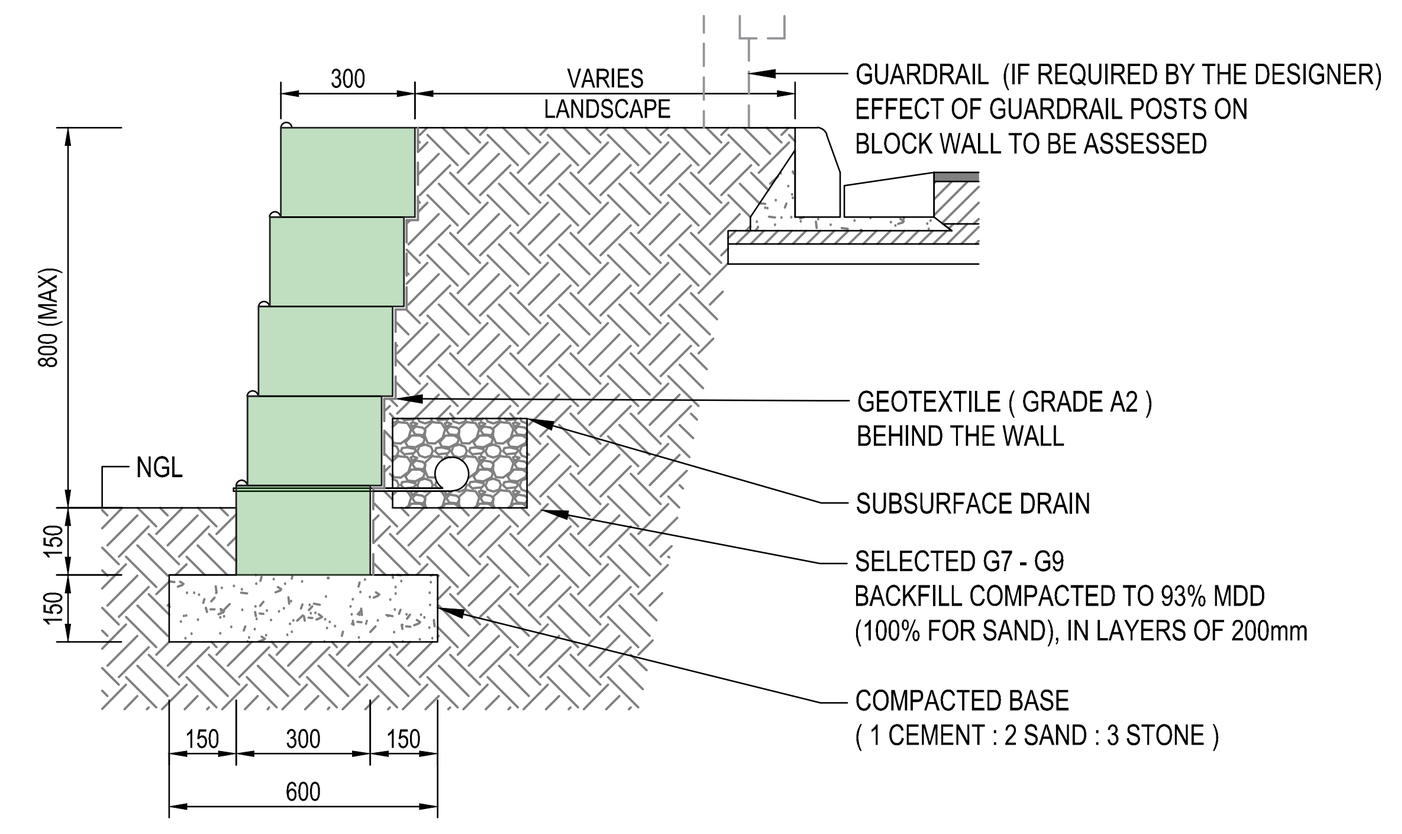

RETAINING WALL: VERTICALLY STACKED
SCALE 1:25

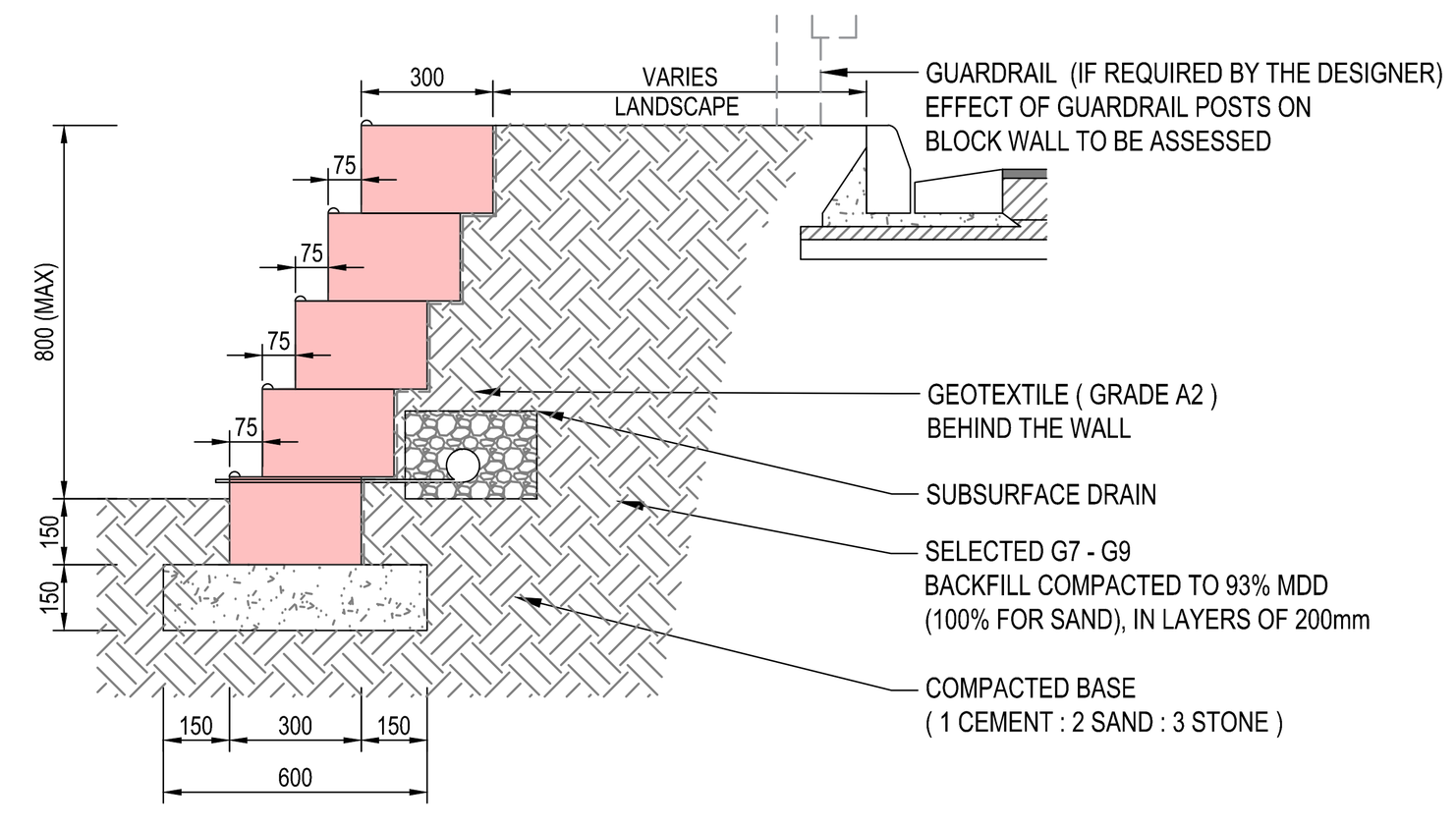

RETAINING WALL: STACKED STEPPED
SCALE 1:25

NOTES / LEGEND

APPROVED BY COUNCIL / CLIENT		
CITY ENGINEER / CLIENT	REG. NO.	DATE

AMENDMENTS CODE

A,B,C... / : BEFORE TENDER
T0 / : TENDER DRAWING
0,1,2,3.../ : AFTER TENDER
Z / : AS BUILT

/A : BY CLIENT
/B : BY ARCHITECT
/C : BY MECHANICAL OR ELECTRICAL
/D : BY BVi
/E : BY OTHER ( )

DATE	INITIAL	No./CODE	REVISION DESCRIPTION
12/02/2026	FMG	T0/D	ISSUE FOR TENDER

CLIENT

STELLENBOSCH
MUNICIPALITY • UMASIPALA • MUNISIPALITEIT

• ENGINEERING • PROCUREMENT • MANAGEMENT
50 YEAR CELEBRATION EST 1967-2017
Registration no. 1998/000157/07

PROVINCE	OFFICE	☎	E-MAIL
Gauteng	Pretoria	(012) 940-1111	pta@bvigp.co.za
	Polokwane	(015) 291-5400	js@bvilp.co.za
Free State	Bloemfontein	(051) 447-2137	bfn@bvifs.co.za
	Welkom	(057) 353-2499	wel@bvifs.co.za
Northern Cape	Upington	(054) 337-6600	upt@bvinc.co.za
	Springbok	(027) 712-3614	spk@bvinc.co.za
KwaZulu Natal	Durban	(031) 266-8382	dbn@bvikn.co.za
	Empangeni	(035) 772-6112	emp@bvikn.co.za
Eastern Cape	Port Elizabeth	(041) 373-4343	bviec@mweb.co.za
	East London	(043) 735-3889	Bk@bviec.co.za
Western Cape	Cape Town	(021) 527-7000	cpt@bviwc.co.za

Visit or contact us online at www.bvigroup.co.za

PROJECT
REALIGNMENT OF THE R44/R310 AND ALEXANDER STREET INTERSECTION

DRAWING TITLE
STANDARD DETAILS
RETAINING WALLS
& GENERAL ITEMS

APPROVED BY BVi

ENGINEER/TECHNOLOGIST	REG. NO.	DATE	
SCALE	AS SHOWN @A0	DRAWN	NADIR FALA
DESIGNED	FM GREEFF	CHECKED	FM GREEFF
PLAN NUMBER		REVISION NO.	DATE SAVED
34092.00-123-01		T0	15 August 2025

O:\PROJECTS DRAWINGS\34000 - 34999\34092.00\CIVIL\TENDER DRAWINGS\34092.00-123-02-REVT0_(STANDARD DETAILS GENERAL ITEMS RET WALL).DWG

34092.00-123-02-REVT0_(STANDARD DETAILS GENERAL ITEMS RET WALL).DWG

0 10 50 100

Thursday, 11 July 2024 14:17:32

BENCHMARKS

DESCRIPTION	X	Y	ELEVATION
ATP1	3756221.040	13624.060	96.910
ATP2	3756315.010	13642.240	95.990
ATP3	3756425.980	13660.430	95.874
ATP4	3756239.250	13517.600	98.101
ATP7	3756736.980	13758.010	95.380
ATP9	3756136.318	13575.038	98.962
LD1	3756524.430	13625.425	96.770
O29D	3756204.120	13348.020	100.014
O31C	3756830.300	13739.590	94.830
RG1	3756621.390	13598.664	97.390
RG2	3756630.094	13688.400	96.250
RG5	3756731.683	13742.469	95.540
WP3	3756828.953	13722.723	95.830

ADAM TAS ROAD
STRAND ROAD
HEROLD STREET
STASIE STREET
STELLENBOSCH STATION
DU TOIT STREET
LIMIT OF CONSTRUCTION
EX. FSMH 1 CL 94.530 IL 93.230 OUT D 1.300
EX. FSMH 3 CL 95.340 IL 92.000 IN IL 92.000 OUT D 3.340
EX. FSMH 4 CL 96.080 IL 92.370 IN IL 92.600 IN IL 92.370 OUT D 3.710
EX. FSMH 5 CL 95.720 IL 92.730 IN IL 92.930 IN IL 92.730 OUT D 2.990
EX. FSMH 10 CL 96.350 IL 93.900 IN IL 93.900 OUT D 2.450
EX. FSMH 11 CL 96.780 IL 94.200 IN IL 94.200 OUT D 2.580
EX. FSMH 12 CL 97.570 IL 95.060 OUT D 2.510
EX. FSMH 13 CL 95.990 IL 94.020 IN IL 94.020 OUT D 1.970
EX. FSMH 14 CL 96.620 IL 95.120 OUT D 1.500
EX. FSMH 16 CL 96.920 IL 95.120 D 1.800
EX. FSMH 17 CL 96.140 IL 93.890 OUT D 2.250
ATP7
RG5
RG2
LD1
NEW SLIP LANE
NEW ACCESS ROAD
EXISTING PRASA RAILWAY LINES
EXISTING PEDESTRIAN SIDEWALK TO REMAIN AS IS
REVISED MEDIAN
EXISTING INTERSECTION TO BE CLOSED OFF
NEW 110mmØ uPVC SEWER CONNECTION, TIE INTO EXISTING MANHOLE
PROPOSED POSITION AND LAYOUT OF NEW ELECTRICAL SUB-STATION
EXISTING STORMWATER CHANNEL TO BE FORMALIZED VIA UNDERGROUND PIPE SYSTEM
EXISTING BUILDING TO BE DEMOLISHED AND REBUILD
EDGE OF PROPOSED SIDEWALK
RIGHT OF WAY SERVITUDE
FURROW SERVITUDE
NEW EMBAYMENT FOR ACCESS TO EXISTING PROPERTIES
NEW CARRIAGEWAY CROSSING FOR ACCESS TO NEW ELECTRICAL SUB-STATION
250mm Class 34 PIPE @ 1.5m
375mm Class 34 PIPE @ 1.5m
450mm Class 34 PIPE @ 1.5m
525mm Class 34 PIPE @ 1.5m
600mm Class 34 PIPE @ 1.5m
1100mm Class 34 PIPE @ 1.5m
1200mm Class 34 PIPE @ 1.5m
1350mm Class 34 PIPE @ 1.5m
1500mm Class 34 PIPE @ 1.5m
1650mm Class 34 PIPE @ 1.5m
1800mm Class 34 PIPE @ 1.5m
2000mm Class 34 PIPE @ 1.5m

NOTES / LEGEND

SERVICES LEGEND:
- EXISTING SEWER LINE
- NEW SEWER LINE
- EXISTING SEWER MANHOLE
- NEW SEWER MANHOLE
- SEWER HOUSE CONNECTION

NOTE:
- CONTOURS REPRESENT DESIGN LEVELS
- OFFSETS FROM CADASTRAL BOUNDARIES SHOULD BE AS PER DETAILED CROSS SECTION DIMENSIONS, NO SCALING OFF THIS DRAWING ALLOWED.
- ALL SEWER PIPES TO BE LAID ON BEDDING FOR FLEXIBLE PIPES AS PER SABS1200LB
- SEWER PIPES AND FITTINGS TO BE CLASS 34 uPVC TO SANS 791 SPIGOT & SOCKET RUBBER RING JOINTS.
- SEWER MANHOLES TO BE OF FIBRE CEMENT TYPE.
- ALL EXISTING SEWER STRUCTURES TO BE ADJUSTED TO MATCH NEW DESIGN LEVELS WHERE REQUIRED.

APPROVED BY COUNCIL / CLIENT

CITY ENGINEER / CLIENT — REG. NO. — DATE

AMENDMENTS CODE

A.B.C... / : BEFORE TENDER
T0 / : TENDER DRAWING
1/.2/.3... : AFTER TENDER
Z / : AS BUILT

A: BY CLIENT
B: BY ARCHITECT
C: BY MECHANICAL OR ELECTRICAL
D: BY IM
E: BY OTHER ( )

DATE	INITIAL	No./CODE	REVISION DESCRIPTION
20/07/2024	FMG	T0/D	ISSUED FOR TENDER

CLIENT

STELLENBOSCH UNIVERSITY • IBHUNI • IYUNIVESITHI
MUNICIPALITY • UMASIPALA • MUNISIPALITEIT

Vbvi — 50 YEARS CELEBRATION EST 1967-2017
• ENGINEERING • PROCUREMENT • MANAGEMENT
Registration No. 1998/003015/07

CESA — Consulting Engineers South Africa

PROVINCE	OFFICE		E-MAIL
Gauteng	Pretoria	(012) 940-1111	pta@vbvi.co.za
	Polokwane	(015) 291-5400	plk@vbvi.co.za
Free State	Bloemfontein	(051) 447-2727	bfn@vbvi.co.za
	Welkom	(057) 353-0456	wel@vbvi.co.za
Northern Cape	Upington	(054) 337-8051	upt@vbvi.co.za
KwaZulu-Natal	Springbok	(027) 712-8014	spk@vbvi.co.za
	Durban	(031) 266-6352	dbn@vbvi.co.za
Eastern Cape	Empangeni	(035) 772-6112	emp@vbvi.co.za
	Port Elizabeth	(041) 373-4240	hdw@vbvi.co.za
	East London	(043) 726-3680	ltd@vbvi.co.za
Western Cape	Cape Town	(021) 527-7000	cpt@vbvi.co.za

Visit us on-line at www.hqhvpi.co.za

PROJECT

REALIGNMENT OF THE R44/R310 AND ALEXANDER STREET JUNCTION

DRAWING TITLE

SEWER LAYOUT - PHASE 1

APPROVED BY BVI

ENGINEER/TECHNOLOGIST — REG. NO. — DATE

SCALE	1:300 @ A0	DRAWN	JAS
DESIGNED	FMG	CHECKED	LP

PLAN NUMBER	REVISION NO.	DATE SAVED
34092.00-130-01	T0	11 July 2024

0 10 50 100

O:\PROJECTS DRAWINGS\34000 - 34999\34092.00\CIVIL\TENDER DRAWINGS\34092.00-101-01 REVT0_(SERVICES LAYOUT).DWG

34092.00-101-01 REVT0_(SERVICES LAYOUT).DWG

Thursday, 11 July 2024 14:18:10

BENCHMARKS

DESCRIPTION	X	Y	ELEVATION
ATP1	3756221.040	13624.060	96.910
ATP2	3756315.010	13642.240	95.990
ATP3	3756425.980	13660.430	95.874
ATP4	3756239.250	13517.600	98.101
ATP7	3756736.980	13758.010	95.380
ATP9	3756136.318	13575.038	98.962
LD1	3756524.430	13625.425	96.770
O29D	3756204.120	13348.020	100.014
O31C	3756830.300	13739.590	94.830
RG1	3756621.390	13598.664	97.390
RG2	3756630.094	13688.400	96.250
RG5	3756731.683	13742.469	95.540
WP3	3756828.953	13722.723	95.830

ADAM TAS ROAD
LIMIT OF CONSTRUCTION
STRAND ROAD
HEROLD STREET
STASIE STREET
STELLENBOSCH STATION
DU TOIT STREET
ADAM TAS ROAD
LIMIT OF CONSTRUCTION
LIMIT OF CONSTRUCTION
ATP7
RG4
RG1
RG2
RG5
50mmØ W/M
150mmØ W/M
200mmØ W/M
110mmØ W/M
200mmØ W/M
150mmØ W/M
200mmØ W/M
110mmØ W/M
NEW SLIP LANE
EXISTING PRASA RAILWAY LINES
EXISTING PEDESTRIAN SIDEWALK TO REMAIN AS IS
REVISED MEDIAN
NEW ACCESS ROAD
NEW ACCESS ROAD
EXISTING INTERSECTION TO BE CLOSED OFF
PROPOSED POSITION AND LAYOUT OF NEW ELECTRICAL SUB-STATION
NEW 32mmØ HDPE WATER CONNECTION. TIE INTO EXISTING W/M
EXISTING STORMWATER CHANNEL TO BE FORMALIZED VIA UNDERGROUND PIPE SYSTEM
EXISTING BUILDING TO BE DEMOLISHED AND REBUILD
EDGE OF PROPOSED SIDEWALK
RIGHT OF WAY SERVITUDE
FURROW SERVITUDE
NEW EMBAYMENT FOR ACCESS TO EXISTING PROPERTIES
NEW CARRIAGEWAY CROSSING FOR ACCESS TO NEW ELECTRICAL SUB-STATION
RAILBOUT
RAILBOUT
LIMIT OF CONSTRUCTION
Y 13800
X 3756000
Y 13700
X 3756000
Y 13600
X 3756000

NOTES / LEGEND

SERVICES LEGEND:
- EXISTING WATER MAIN
- NEW WATER MAIN
- EXISTING TREATED EFFLUENT MAIN
- TREATED EFFLUENT MAIN
- HYDRANT
- VALVE
- AIR VALVE

NOTE:
DANGER TAPE MUST BE INSTALLED ON TOP OFF ALL TREATED EFFLUENT PIPES

OFFSETS FROM CADASTRAL BOUNDARIES SHOULD BE AS PER DETAILED CROSS SECTION DIMENSIONS.
NO SCALING OFF THIS DRAWING ALLOWED.

APPROVED BY COUNCIL / CLIENT

CITY ENGINEER / CLIENT — REG. NO. — DATE

AMENDMENTS CODE

A,B,C... : BEFORE TENDER
T0 : TENDER DRAWING
D,1,2,3... : AFTER TENDER
2 : AS BUILT

A : BY CLIENT
B : BY ARCHITECT
C : BY MECHANICAL OR ELECTRICAL
D : BY BA
E : BY OTHER ( )

DATE	INITIAL	No./CODE	REVISION DESCRIPTION
20/07/2024	FMG	T0/D	ISSUED FOR TENDER

CLIENT

STELLENBOSCH
MUNICIPALITY • UMASIPALA • MUNISIPALITEIT

bvi 50 YEAR CELEBRATION EST 1967-2017
• ENGINEERING • PROCUREMENT • MANAGEMENT

PROVINCE	OFFICE	TEL	E-MAIL
Gauteng	Pretoria	(012) 940-1111	pta@bvigroup.co.za
	Polokwane	(015) 291-0400	plk@bvi.co.za
Free State	Bloemfontein	(051) 447-2121	bfn@bvi.co.za
	Welkom	(057) 352-2456	wel@bvi.co.za
Northern Cape	Upington	(054) 331-6600	upt@bvi.co.za
	Springbok	(027) 712-8114	spb@bvi.co.za
KwaZulu-Natal	Durban	(031) 266-8300	dbn@bvi.co.za
	Empangeni	(035) 772-4112	emp@bvi.co.za
Eastern Cape	Port Elizabeth	(041) 573-4400	hms@bvi.co.za
	East London	(043) 726-3600	bl@bvi.co.za
Western Cape	Cape Town	(021) 527-1000	cpt@bvi.co.za

Visit or contact us online at www.bvigroup.co.za

Registration no. 1998/003310/07

PROJECT

REALIGNMENT OF THE R44/R310 AND ALEXANDER STREET JUNCTION

DRAWING TITLE

WATER LAYOUT - PHASE 1

APPROVED BY BVI

ENGINEER/TECHNOLOGIST — REG. NO. — DATE

SCALE	1:300 @ A0	DRAWN	JAS
DESIGNED	FMG	CHECKED	LP
PLAN NUMBER		REVISION NO.	DATE SAVED
34092.00-140-01		T0	11 July 2024

O:\PROJECTS DRAWINGS\34000 - 34999\34092.00\CIVIL\TENDER DRAWINGS\34092.00-101-01 REVT0_(SERVICES LAYOUT).DWG

34092.00-101-01 REVT0_(SERVICES LAYOUT).DWG

0 10 50 100

11.25° BEND

DIAMETER (mm)	MIN BEARING AREA (m^2)	DIMENSIONS (mm) A	B	C	D	H
110	0.03	300	300	200	400	500
160	0.07	300	300	200	400	500
200	0.11	400	400	200	400	600
250	0.17	400	400	200	500	600
315	0.27	500	400	200	500	700
355	0.35	500	400	250	600	800
400	0.44	600	500	250	600	800
450	0.56	600	500	250	700	1000
500	0.69	800	500	250	700	1000
560	0.87	800	500	300	800	1200
630	1.10	1000	500	300	800	1200

22.5° BEND

DIAMETER (mm)	MIN BEARING AREA (m^2)	DIMENSIONS (mm) A	B	C	D	H
110	0.07	400	300	200	400	500
160	0.14	400	300	200	400	500
200	0.22	500	400	200	400	600
250	0.34	600	400	200	500	600
315	0.55	800	400	250	500	800
355	0.69	900	400	250	600	800
400	0.88	1100	500	250	600	800
450	1.12	1200	500	250	700	1000
500	1.38	1400	500	250	700	1000
560	1.73	1500	500	300	800	1200
630	2.19	1900	500	300	800	1200

THRUST BLOCK DIMENSIONS

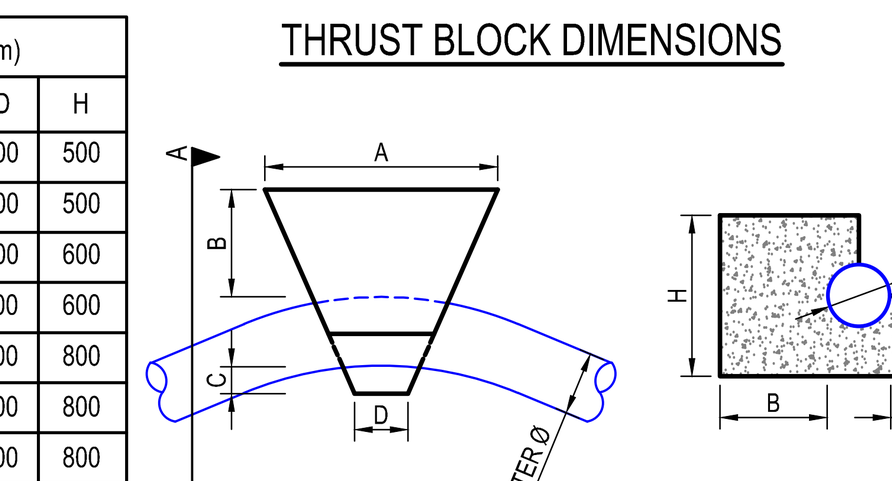

45° BEND

DIAMETER (mm)	MIN BEARING AREA (m^2)	DIMENSIONS (mm) A	B	C	D	H
110	0.13	600	300	200	400	500
160	0.28	600	300	200	400	500
200	0.43	800	400	200	400	600
250	0.68	1200	400	200	500	600
315	1.07	1400	500	250	500	800
355	1.36	1800	600	250	600	800
400	1.73	2000	700	250	600	900
450	2.19	2200	800	300	700	1000
500	2.70	2600	800	300	700	1050
560	3.39	2800	1000	350	800	1250
630	4.29	2900	1000	450	800	1500

90° BEND

DIAMETER (mm)	MIN BEARING AREA (m^2)	DIMENSIONS (mm) A	B	C	D	H
110	0.24	600	300	200	400	500
160	0.51	900	300	200	400	600
200	0.80	1000	400	300	400	800
250	1.25	1600	400	300	500	800
315	1.98	2200	500	300	500	900
355	2.52	2550	600	300	600	1000

NOTES

THE THRUST BLOCK DIMENSIONS ARE CALCULATED BASED ON THE FOLLOWING ASSUMPTIONS:

- CLASS 12 uPVC PIPE TESTED AT A MAXIMUM TESTING PRESSURE OF 1800 kPa
- THE SURROUNDING SOIL BEARING PRESSURE OF 200kPa (i.e. LOOSE GRAVEL OR LOOSE SAND AND GRAVEL, SOFT CLAYS)
- FACTOR OF SAFETY = 2
- THE DIMENSIONS GIVEN ARE THE MINIMUM DIMENSIONS

THRUST BLOCKS FOR SOIL BEARING PRESSURE UP TO 200kPA

THRUST BLOCK FOR TEES

DIAMETER (mm)	MIN BEARING AREA (m^2)	DIMENSIONS (mm) A	B	C	D	E
100x100	0.10	360	250	200	280	280
150x100	0.10	360	250	200	280	280
225x100	0.10	360	250	200	280	280
300x100	0.10	500	250	200	300	300
375x100	0.10	575	250	200	300	300
450x100	0.10	650	250	200	300	300
150x150	0.23	300	250	200	770	300
225x150	0.23	450	250	200	550	450
300x150	0.23	500	250	200	460	460
375x150	0.23	660	250	200	400	400
450x150	0.23	660	250	200	400	400
225x225	0.52	450	350	200	1160	500
300x225	0.52	600	250	200	870	600
375x225	0.52	750	250	200	690	500
450x225	0.52	800	250	200	650	650
300x300	0.92	600	450	200	1530	600
375x300	0.92	750	400	200	1230	500
450x300	0.92	750	250	200	1230	750
375x375	1.44	750	750	200	1920	500
450x375	1.44	900	450	200	1600	750
450x450	2.08	1000	650	200	2000	750

NOTES

- HEAD = 120m
- ASSUMED bp = $10kN/m^2$ (SAND)
- VALUE FOR B GIVEN AS ABSOLUTE MINIMUM.
- THRUST BLOCK TO BE CAST AGAINST UNDISTURBED EARTH.
- THE BLOCK IS TO BE KEPT CLEAR OF THE COUPLING BY ½ THE WIDTH OF THE COUPLING ie:

THRUST BLOCK DIMENSIONS

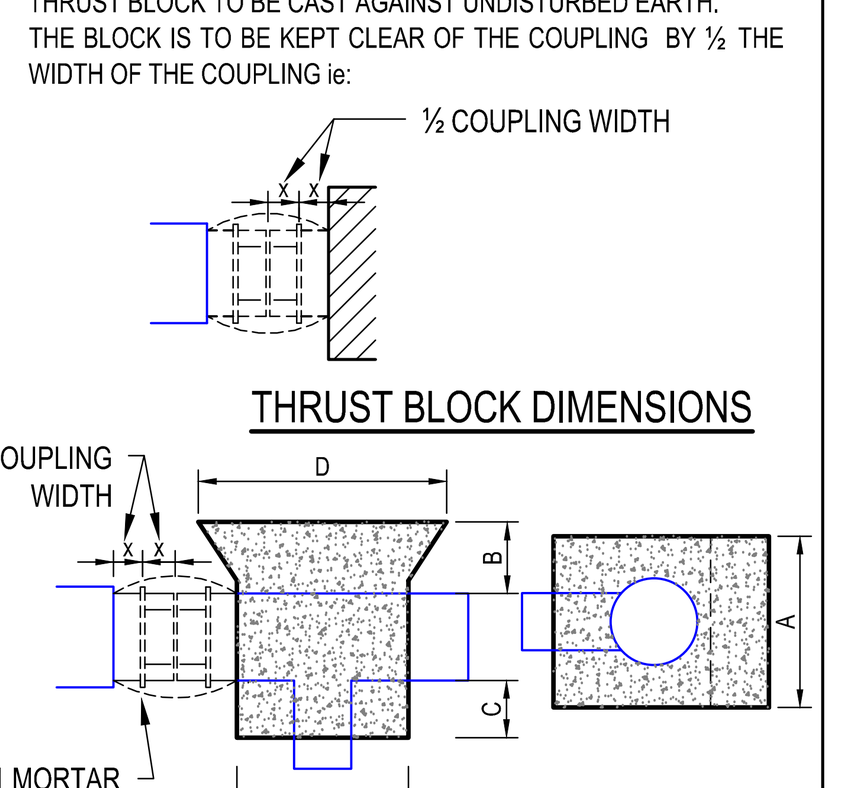

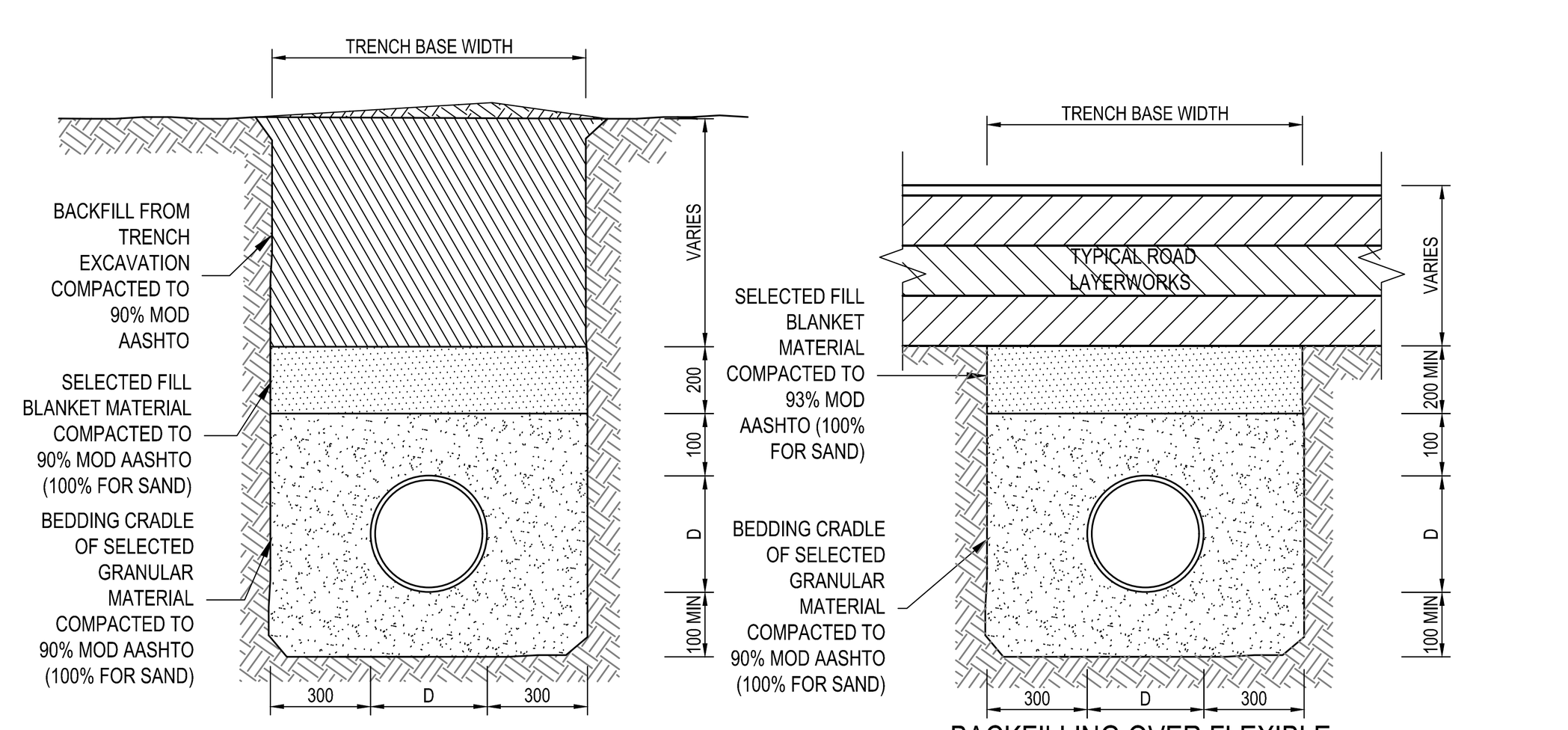

FLEXIBLE PIPELINE BACKFILL DETAILS

SCALE 1:20

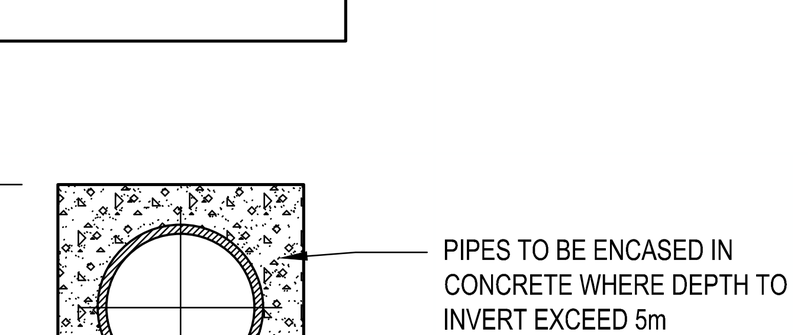

CONCRETE ENCASING FOR PIPES (TYPE 1)

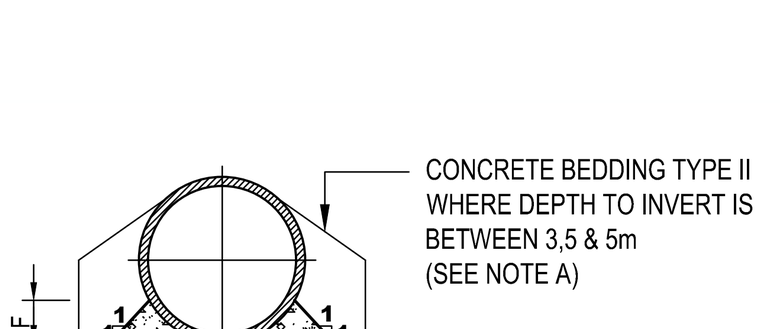

CONCRETE BEDDING (TYPE 2)

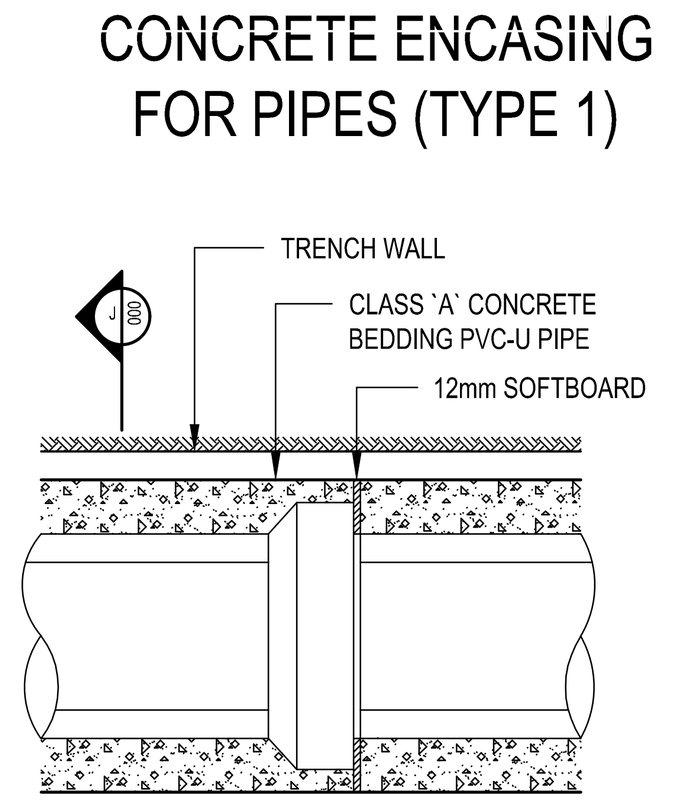

PLAN (TYPE 1)

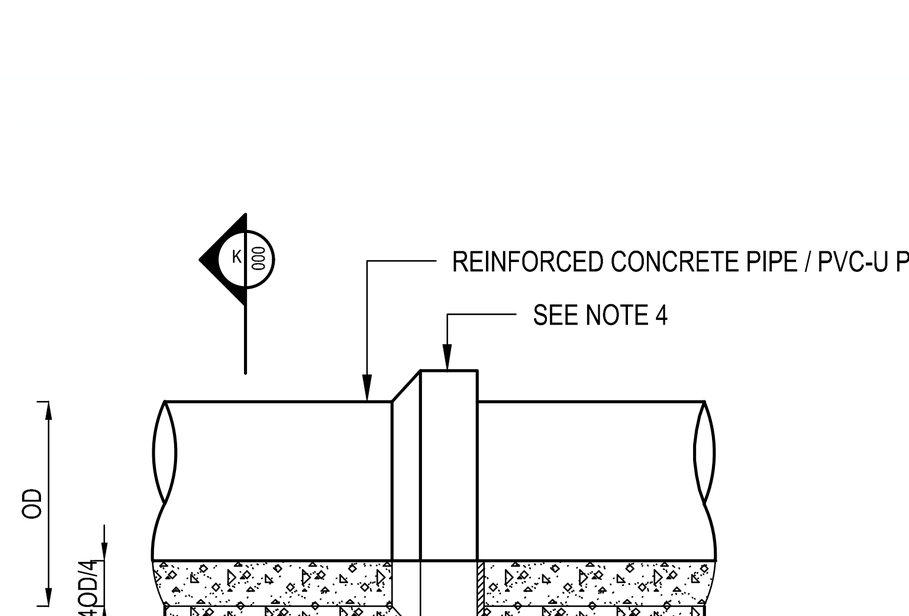

SIDE ELEVATION (TYPE 2)

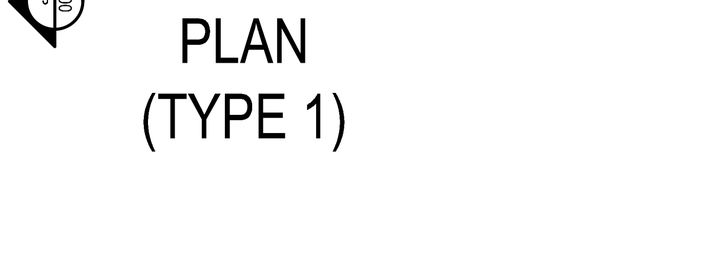

SECTION OF FLEXIBLE JOINTS IN CONCRETE ENCASING (TYPE 1)

PIPE Ø (mm)	CONCRETE ENCASING A & B	C	CONCRETE BEDDING D	E	F	CONCRETE VOLUMES m/m TYPE 1	TYPE 2	ENCASE
100	285	75	335	75	35	0.022	0.046	0.067
150	340	75	415	75	50	0.030	0.064	0.087
200	395	75	480	75	60	0.037	0.081	0.109
225	425	75	525	75	70	0.043	0.093	0.122
250	500	100	610	100	75	0.062	0.133	0.179
300	560	100	690	100	90	0.075	0.162	0.212
375	645	100	805	100	110	0.095	0.207	0.260

NOTES :

A. FOR EARTHENWARE PIPES TO A INVERT LESS THAN 3,5m USE TYPE I CONCRETE BEDDING. BETWEEN 3,5m & 5m USE TYPE II CONCRETE BEDDING. DEEPER THAN 5m - ENCASE IN CONCRETE
B. CONCRETE BEDDINGS TYPE I & TYPE II MUST BE 1:3:6/19 CONCRETE & CONCRETE ENCASING GRADE 20/19 AND MUST BE CAST MONOLITHICALLY. ONLY VERTICAL CONSTRUCTION JOINTS WILL BE PERMITTED. ON A WRITTEN INSTRUCTION FROM THE ENGINEER FLEXIBLE JOINTS MUST BE CONSTRUCTED IN THE CONCRETE ENCASING OR TYPE II CONCRETE BEDDING AT SPECIFIED PIPE JOINTS.
C. EARTHENWARE PIPES IN TUNNEL, ROADCROSSINGS, OR IF DEPTHS EXCEED 5m MUST BE ENCASED IN CONCRETE
D. IN THE CASE OF 300 & 375mmØ PIPES, NO BACKFILLING WILL BE PERMITTED, EXCEPT THE FIRST 300mm, UNTILL THE CONCRETE BEDDING (ONLY TYPE II) OR CONCRETE ENCASING HAS REACHED A COMPRESSIVE STRENGTH OF 15 MPa.
E. MEANING OF ABBREVIATIONS :
OD = OUTSIDE DIAMETER
ID = INSIDE DIAMETER

CONCRETE BEDDINGS & CONCRETE ENCASING FOR EARTHENWARE PIPES

WATER NOTES:

1. ALL WATER PIPELINES EQUAL TO AND LARGER THAN DIAMETER 75MM TO BE uPVC CLASS 12 HEAVY DUTY TO SANS 966 WITH SPIGOT AND SOCKET RUBBER RING JOINTS UNLESS OTHERWISE INDICATED.
2. FITTINGS TO uPVC PIPES TO BE DUCTILE IRON (EN 12842), FUSION BONDED THERMOPLASTIC COATED INTERNALLY AND EXTERNALLY TO MINIMUM 0.25mm THICKNESS, UNLESS OTHERWISE INDICATED.
3. VALVES SHALL BE IN ACCORDANCE WITH SABS 1200 & SABS 644/ 1974. ALL VALVES MUST BE LEFT HAND CLOSING AND FITTED WITH A NON-RISING SPINDLE WITH CAP TOP FITTED WITH S/S BOLTS AND NUTS. REFER TO CoCT DRAWING W1 FOR VALVE AND CHAMBER DETAILS.
4. FIRE HYDRANTS SHALL BE IN ACCORDANCE WITH SABS 1200, COMPLY WITH THE LOCAL FIRE DEPARTMENT STANDARD REGULATIONS. HYDRANTS MUST HAVE 65mm LONDON ROUND THREAD. VALVE TO BE RIGHT HAND OPENING AND FITTED WITH A SPINDLE CAP TOP FITTED WITH S/S BOLTS AND NUTS. REFER TO DRAWING xxxxx.xx-143-01 FOR FIRE HYDRANT AND DETAILS.
5. HOUSE CONNECTION SADDLES TO BE MAGNUM PN16 DUCTILE IRON WITH 0.25mm PLASCOAT PPA 571 HES COATING WITH STAINLESS STEEL BOLTS AND NUTS. ALL WATER HOUSE CONNECTION PIPES TO BE HPDE CLASS 16, TYPE 5 COMPLYING WITH SABS 533 USING COMPRESSION FITTING AND JOINTS. REFER TO CoCT W3 FOR TYPICAL HOUSE CONNECTION DETAILS.
6. MINIMUM COVER ON PIPES: UP TO 75mm SHALL BE 0,6m AND FOR 110mm UP TO 250mm SHALL BE 1,0m
7. ONLY STAINLESS-STEEL BOLTS, NUTS AND WASHERS TO BE USED ON ALL UNDERGROUND SERVICES INCLUDING SADDLES, HYDRANTS, SPECIALS, ETC., WRAPPED IN DENSO TAPE.
8. PIPES SHALL NOT BE TESTED AGAINST ISOLATING VALVES. TEMPORARY BLANK FLANGES OR END CAPS WILL BE INSTALLED TO TESTS AGAINST.
9. THE CONTRACTOR SHALL SUBMIT AS-BUILT INFORMATION OF THE UNDERGROUND SERVICES TO THE ENGINEER FOR APPROVAL BEFORE THE START OF THE ROAD LAYER WORK OR ANY BULK FILL.
10. ALL MANHOLES SHALL BE WATER TIGHT.
11. ALL BENCHING INSIDE MANHOLES/CHAMBERS FLOORS SHALL BE RENDERED IN 20mm THICK 1:3 CEMENT MORTAR AND FINISHED SMOOTH AND TRUE WITH A STEEL TROWEL AND ROUNDED AT CORNERS AND EDGES.
12. ALL NEWLY INSTALLED PIPES SHALL BE SUBJECTED TO ACCEPTANCE TESTS (AIR TIGHTNESS/ HYDRAULIC TESTS) TO SANS 1200 LD. THE WATER MAINS SHALL BE TESTED IN SECTIONS BETWEEN MANHOLES/CHAMBERS AND OTHER PLUMBING FIXTURES. ALL TEST RESULTS SHALL BE RECORDED AND PRESENTED TO THE ENGINEER.
13. AFTER BACKFILLING AND COMPACTION OF FILL OVER PIPES, THE WATER SHALL BE RETESTED TO CERTIFY THAT IT HAS NOT BEEN DISTURBED OR DAMAGED DURING BACKFILLING.
14. COVERS AND FRAMES SHALL BE GROUTED SOLIDLY ONTO THE SHAFTS. THE ENGINEERS WILL DIRECT HOW CONCRETE SURROUNDS ARE TO BE FINISHED OFF TO SUIT SURROUNDING SURFACES.
15. FH TYPE 1 - 65Ø PROUD-OF-GROUND, INCL. OF CONC. SURROUND SLEEVE, U.O.S.
16. FH TYPE 2 - TWIN BOOSTER, U.O.S.
17. INTERNAL PIPEWORK/PLUMBING SHALL HAVE A TRANSITION BETWEEN THE EXTERNAL PIPE MATERIAL AND THE INTERNAL PIPE MATERIAL, WHICH HAS TO BE APPROVED BY THE ENGINEER IN WRITING BEFORE INSTALLATION AND/OR ORDERING OF MATERIALS, U.O.S
18. CIVIL WORKS TERMINATE ±1.0m OUTSIDE OF THE BUILDING. ENVELOPE AT THE ISOLATION/SHUT-OFF VALVE. INTERNAL PLUMBING SHALL BE DONE FROM THIS TERMINATION POSITION AS PER WET SERVICES ENGINEER'S DRAWING, U.O.S.
19. ALL MASONRY USED IN CONSTRUCTION OF MANHOLES OR CHAMBERS SHALL BE R.O.K. BRICKS WITH MIN. 14MPa STRENGTH, SOLID CLAY BRICKS.
20. CONTRACTOR MUST SUBMIT AS BUILT SURVEY (FROM EXTERNAL REGISTERED SURVEYOR), DRAWING DATA OF ALL CONSTRUCTED SERVICES INCLUSIVE (INVERT LEVELS, COVER LEVELS AND PIPE SLOPES) WHERE APPLICABLE.

WATER DETAIL DRAWINGS:

1. REFER TO COCT DRAWINGS W4A AND W4B OF TYPICAL BULK WATER METER AND CHAMBER DETAILS.
2. REFER TO DWG 30964.28-143.01 FOR WATER DETAILS.

GENERAL NOTES:

1. ALL WORK TO BE DONE IN ACCORDANCE WITH SABS/SANS1200 & THE PROJECT SPECIFICATIONS.
2. ALL LEVELS ARE IN METERS ABOVE MEAN SEA LEVEL UNLESS OTHERWISE STATED.
3. DO NOT SCALE. USE FIGURED DIMENSIONS ONLY. ALL LEVELS TO BE CHECKED BEFORE CONSTRUCTION COMMENCES AND DISCREPANCIES REPORTED TO THE ENGINEER.
4. THESE DRAWING SHALL BE READ IN CONJUNCTION WITH THE ARCHITECTS DRAWINGS (IF APPLICABLE).
5. ALL SETTING OUT COORDINATES AND DIMENSIONS SHOWN ON THIS DRAWING SHALL BE VERIFIED BY CONTRACTOR IN ORDER TO ENSURE THAT ON-SITE REQUIREMENTS ARE MET. ANY DISCREPANCIES MUST BE REPORTED TO THE ENGINEER PRIOR TO THE ORDERING OF ANY MATERIALS AND/OR THE COMMENCEMENT OF CONSTRUCTION.
6. THE POSITION AND DEPTH OF ALL EXISTING SERVICES ON AND OFF THE SITE WERE AFFECTED BY THE WORKS, SHALL BE CONFIRMED PRIOR TO THE COMMENCEMENT OF ANY CONSTRUCTION WORK ON THE INSTALLATION OF SERVICES. THE CONTRACTOR SHALL PROTECT ALL EXISTING SERVICES FROM DAMAGE THROUGHOUT CONSTRUCTION.
7. THE CONTRACTOR MUST IMMEDIATELY NOTIFY THE ENGINEER OF ANY EXISTING SERVICES FOUND WHICH ARE NOT INDICATED ON THE DRAWINGS.

DEMOLITION NOTES:

1. ALL DEMOLITION WORKS TO BE DONE IN ACCORDANCE WITH RELEVANT SECTIONS OF SANS 1200C.
2. THE CONTRACTOR WILL PRIOR TO THE START OF CONSTRUCTION AND/OR DEMOLITION WORKS CHECK AND EXPOSE TIE-IN POINTS AND VERIFY ALL EXISTING SERVICES INVERT LEVELS AND EXTENT OF EXISTING UNDERGROUND SERVICES.
3. ALL EXISTING MANHOLES AND VALVE CHAMBERS OR STRUCTURES SITUATED IN THE DEMOLITION AREA SHALL BE SAFEGUARDED DURING THE DEMOLITION WORKS.
4. ALL EXISTING FIXTURES (ROAD SIGNS, BENCHES, POSTS, ETC) SITUATED IN THE DEMOLITION WORKS AREA SHALL BE SAFELY REMOVED AND STORED FOR RE-USE, UNLESS OTHERWISE INSTRUCTED BY ENGINEER
5. DURING DEMOLITION WORK, ALL MECHANICAL SYSTEMS AND BUILDING SERVICES SERVING OCCUPIED AREAS SHALL BE MAINTAINED OPERATIONAL. WHERE SYSTEM OR SERVICE INTERRUPTIONS ARE REQUIRED, ALTERNATIVE ARRANGEMENTS MUST BE CONFIRMED WITH THE ENGINEER AND FACILITIES MANAGER PRIOR TO ANY DEMOLITION WORKS.
6. AREAS OF DEMOLITION ARE APPROXIMATE; IT IS THE CONTRACTOR'S RESPONSIBILITY TO COORDINATE DEMOLITION WITH EXISTING CONDITIONS & NEW CONSTRUCTION.
7. EXISTING SERVICES AND STRUCTURES TO REMAIN SHALL BE PROTECTED DURING DEMOLITION AND NEW WORK CONSTRUCTION ACTIVITIES. EXISTING FLOORING AND FINISHES TO REMAIN UNLESS OTHERWISE CONFIRMED BY THE ENGINEER.
8. THE EXTENT OF DEMOLITION INDICATED IS BASED ON AS BUILT DRAWINGS PROVIDED BY THE OWNER AND FIELD OBSERVATIONS. ANY DISCREPANCIES BETWEEN ACTUAL CONDITIONS AND THOSE INDICATED ARE TO BE BROUGHT TO THE ATTENTION OF THE ENGINEER AS SOON AS DISCREPANCIES ARE DISCOVERED, BEFORE DEMOLITION IS TO CONTINUE IN SUCH AREA.
9. DISPOSAL OF MATERIAL GENERATED FROM DEMOLITION WORKS SHALL BE SORTED AND DISPOSED OF AT A REGISTERED AND APPROVED DUMP FACILITY ACCORDING TO THE APPROVED DEMOLITION PLAN
10. ALL EXISTING PAVING BLOCKS AND PRECAST KERBS SHALL BE UPLIFTED AND TEMPORARILY STOCKPILED FOR RE-SUE, UNLESS OTHERWISE INSTRUCTED BY THE ENGINEER.
11. MATERIAL GENERATED FORM DEMOLITION WORKS TO STRUCTURAL ELEMENTS (SUCH AS BRICKS) SHALL BE STOCKPILED IN A SEPARATE TEMPORARY STOCKPILE FOR RE-USE. CRUSHING OF MATERIAL FOR RE-USE IN PERMANENT WORKS ONLY TO BE DONE ON APPROVAL OF THE ENGINEER AND APPROPRIATE TESTING.
12. NO TREES SHALL BE REMOVED OR TRIMMED UNLESS SO INSTRUCTED BY THE ENGINEER.
13. ALL TREE ROOTS BELOW NEW BUILDING FOOTPRINTS SHALL BE REMOVED TO A DEPTH OF 1.0M BELOW THE NEW FOUNDATION LEVELS. REINSTATEMENT OF THESE EXCAVATIONS SHALL BE DONE WITH MINIMUM G7 QUALITY MATERIAL COMPACTED TO 97% MDD (100% FOR SAND) TO ACHIEVE CBR OF 15% IN TOP 150mm.
14. ALL EXISTING UNDERGROUND SERVICES PROVIDING CONNECTIONS TO THE BUILDINGS WHICH SHALL BE DEMOLISHED WILL BE REMOVED. REINSTATEMENT OF THESE SERVICE TRENCHES SHALL BE DONE WITH MINIMUM G7 QUALITY MATERIAL COMPACTED TO 97% MDD (100% FOR SAND) TO ACHIEVE CBR OF 15% IN TOP 150mm.

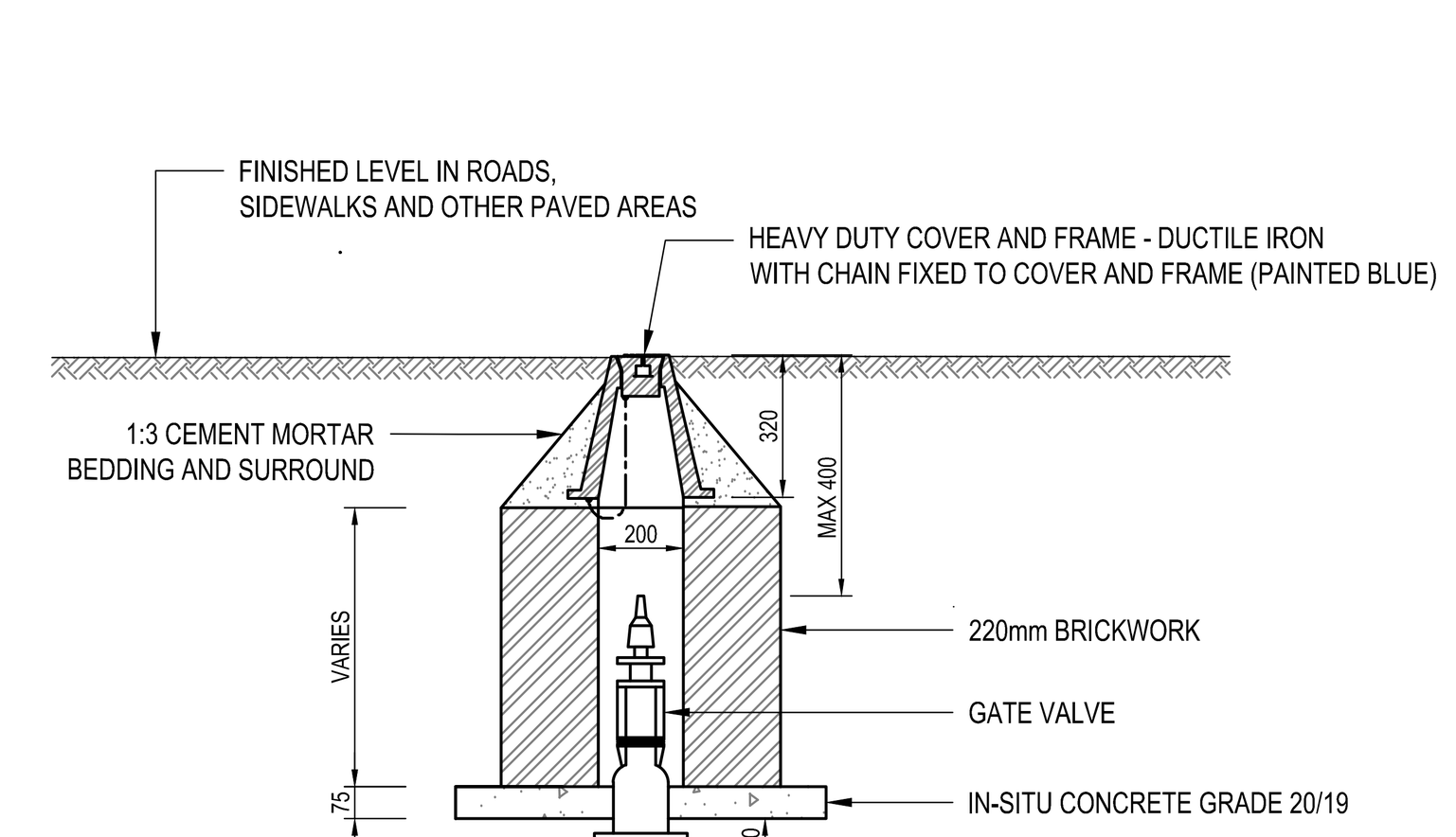

TYPICAL SECTION VALVE CHAMBER (≤ 250Ø) FOR PVC-U PIPELINES

SCALE 1:20

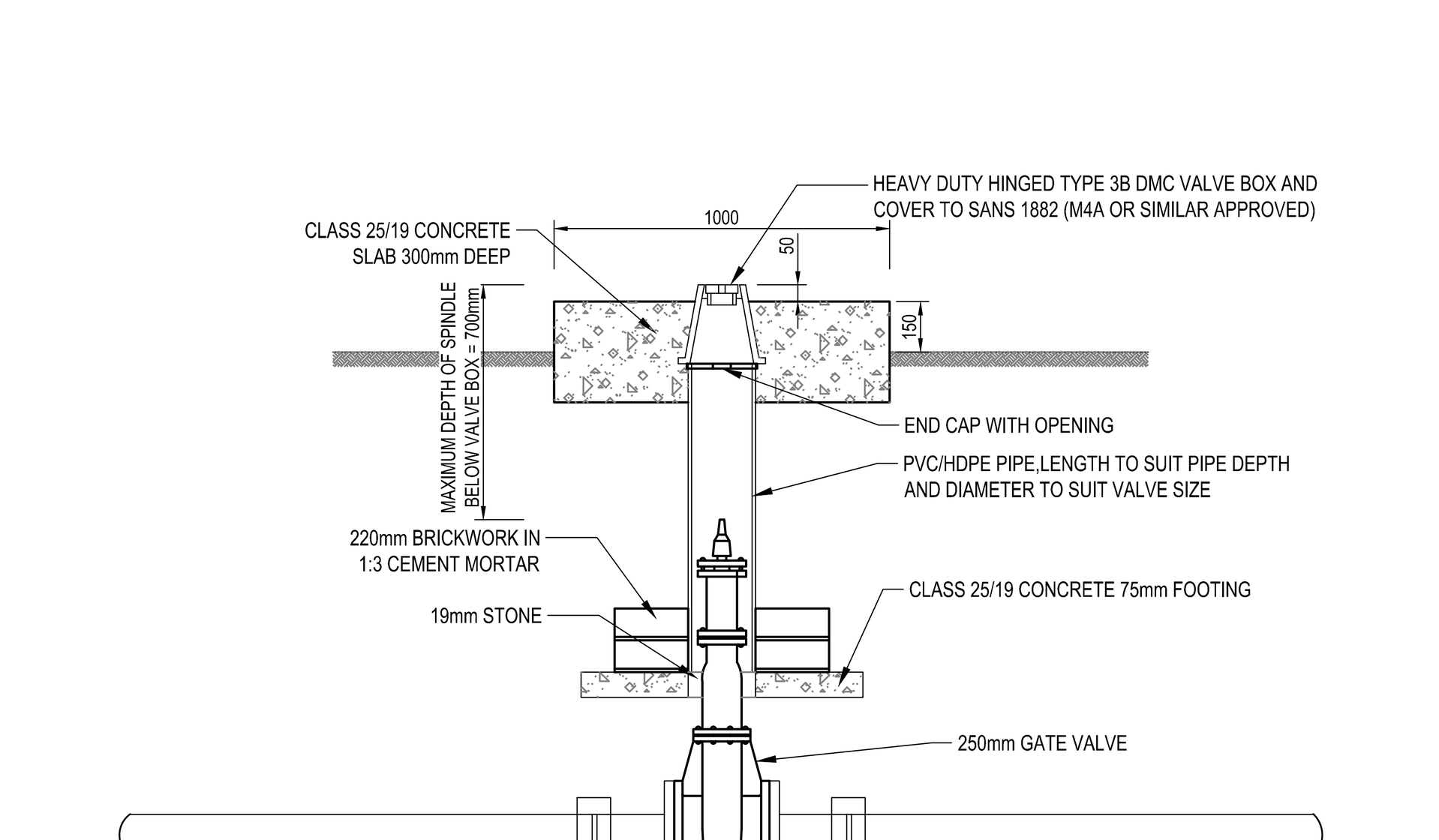

250mmØ GATE VALVE & CHAMBER DETAIL

SCALE 1:20

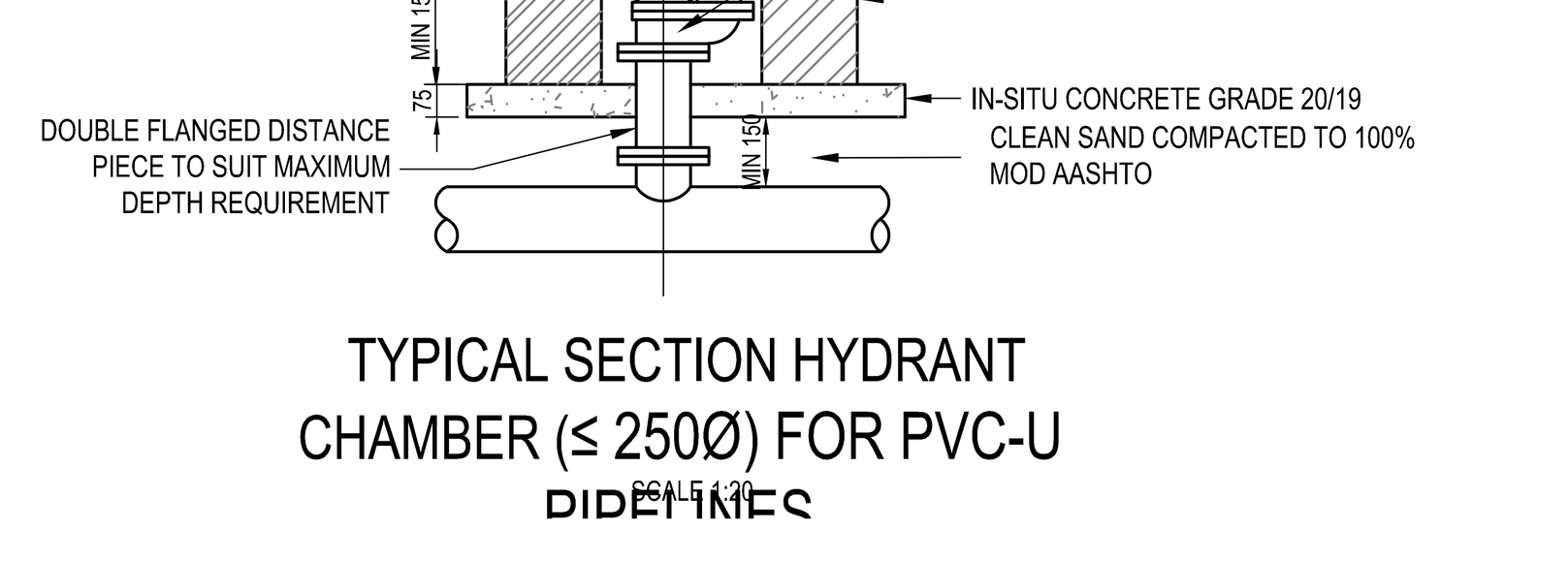

TYPICAL SECTION HYDRANT CHAMBER (≤ 250Ø) FOR PVC-U PIPELINES

SCALE 1:20

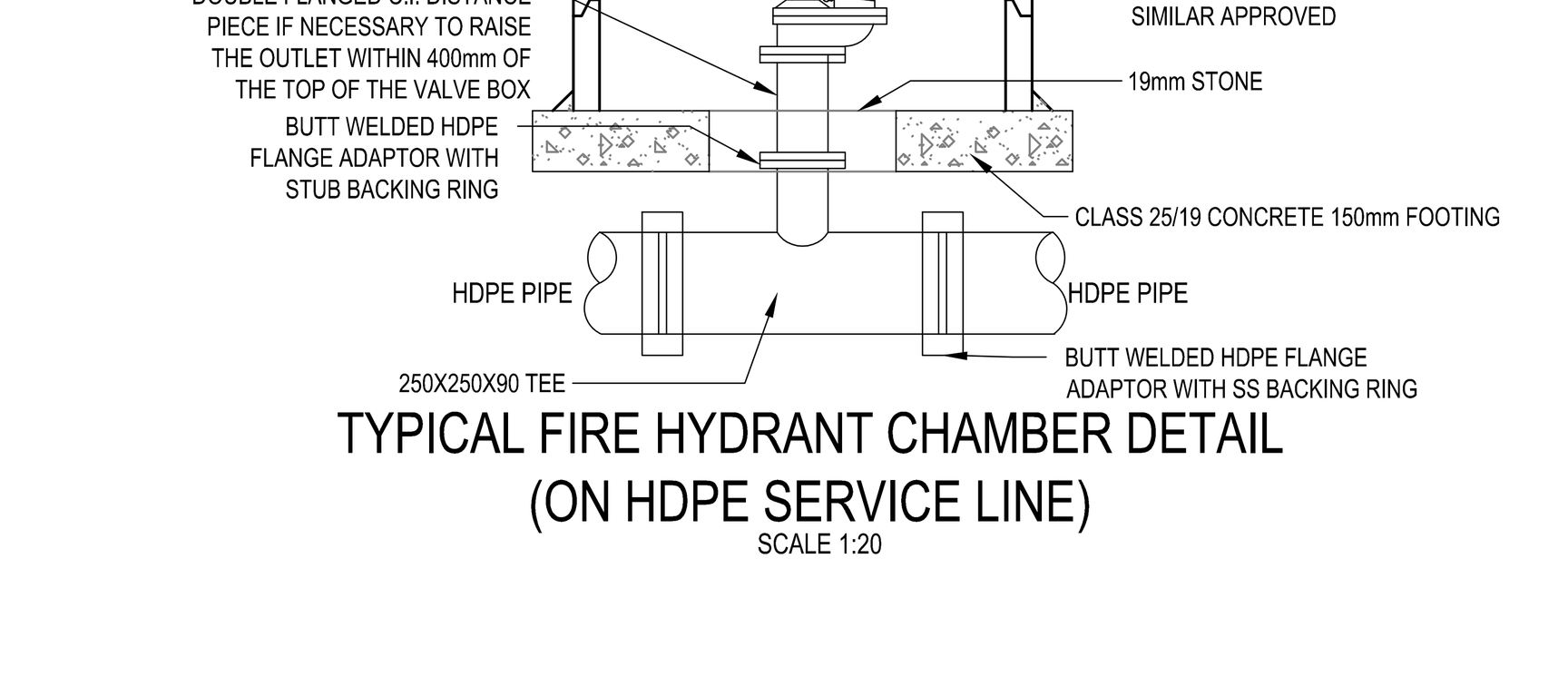

TYPICAL FIRE HYDRANT CHAMBER DETAIL (ON HDPE SERVICE LINE)

SCALE 1:20

SPECIFIED CONCRETE COMPRESSION STRENGTHS

GRADE	7 DAYS	28 DAYS
20/19	15 MPa	20 MPa
15/19	10 MPa	15 MPa

CONCRETE BEDDINGS & CONCRETE ENCASINGS FOR CONCRETE PIPELINES

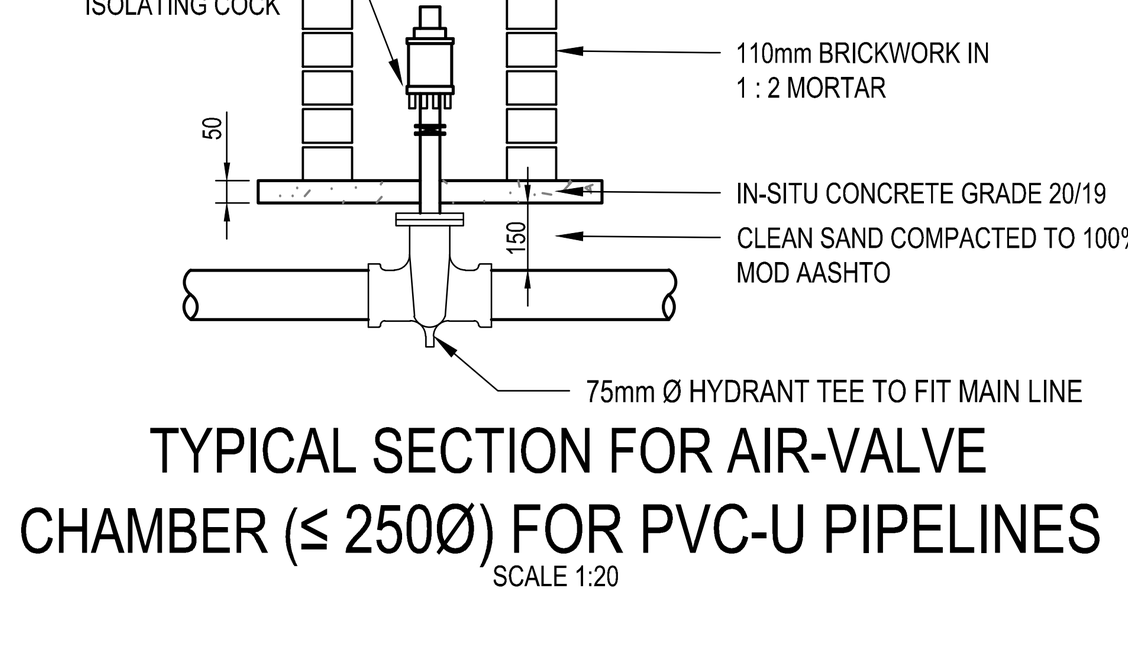

TYPICAL SECTION FOR AIR-VALVE CHAMBER (≤ 250Ø) FOR PVC-U PIPELINES

SCALE 1:20

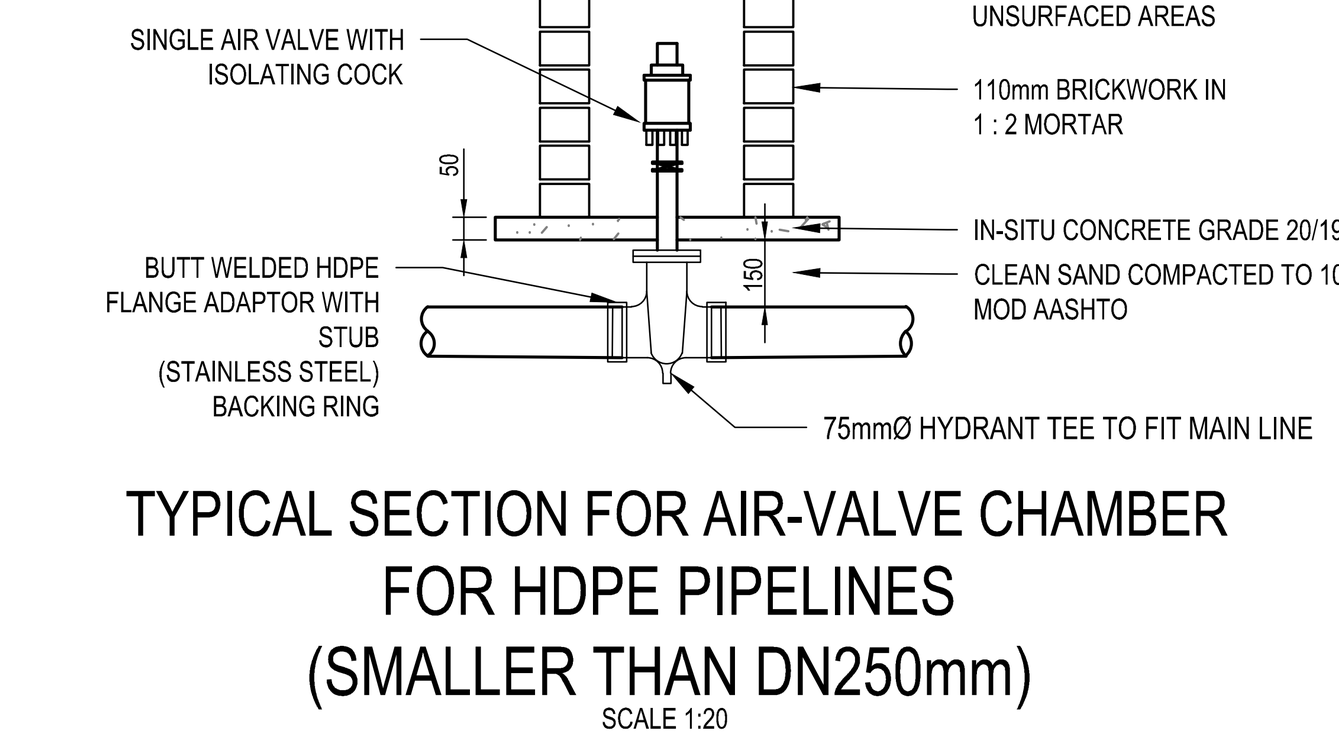

TYPICAL SECTION FOR AIR-VALVE CHAMBER FOR HDPE PIPELINES (SMALLER THAN DN250mm)

SCALE 1:20

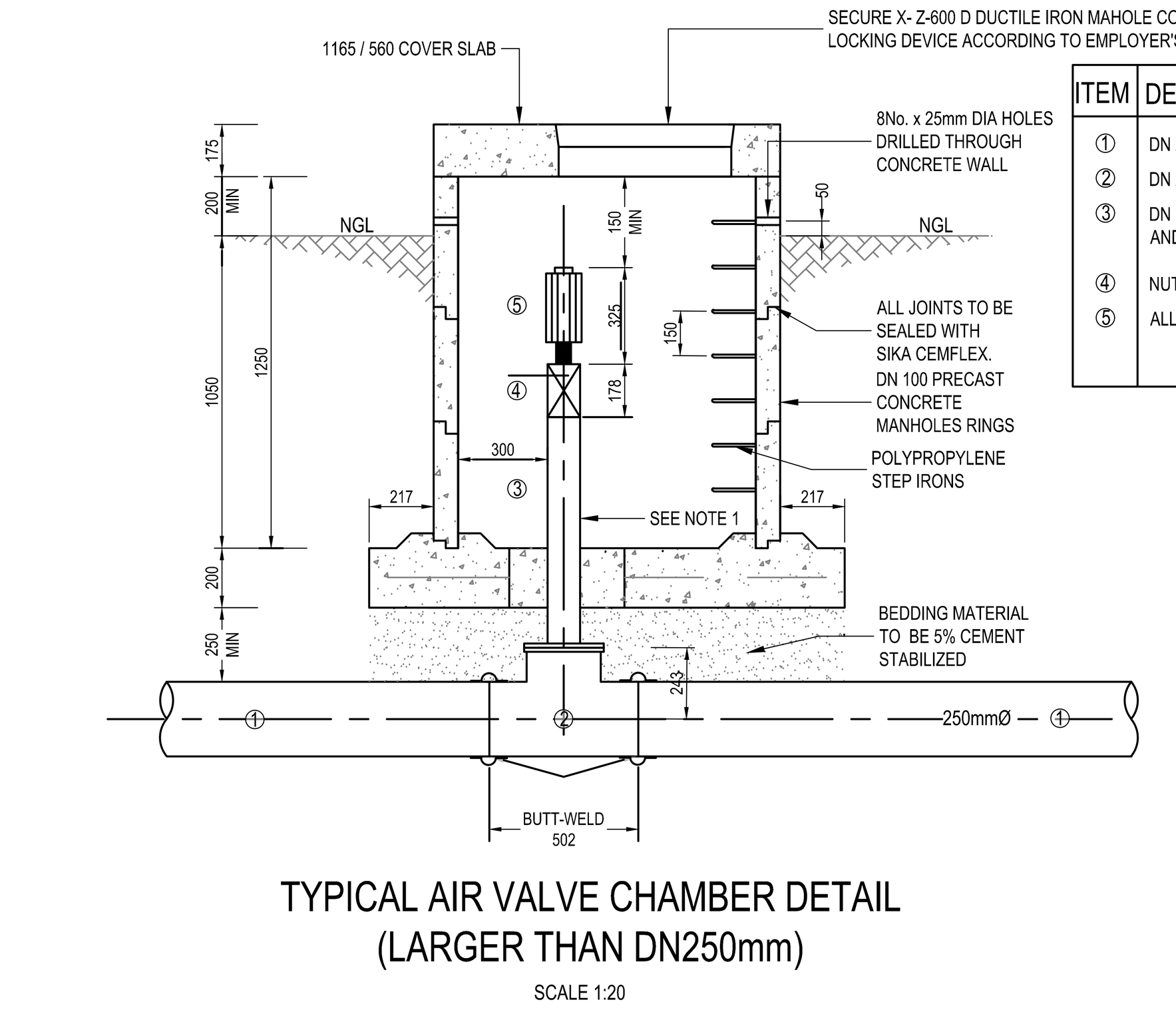

ITEM	DESCRIPTION
①	DN 250 uPVC PIPE
②	DN 250 DUCTILE IRON EQUAL TEE WITH FLANGED BRANCH
③	DN 50mm SS16 PIPE, WITH A DN 250 FLANGE ONE END AND BSP THREAD ON THE OTHER END, 1075mm LONG
④	NUTS, BOLTS AND WASHERS SHOULD BE GRADE 316
⑤	ALL FLANGES DRILLED TO BS 10 TABLE D

NOTE:

1. LENGTH OF FLANGED STUB TO BE DETERMINED ON SITE TO ENSURE THAT AIR VALVE INTAKE AREA IS LOCATED ABOVE LEVEL OF DRAINAGE HOLES DRILLED THROUGH WALL
2. ALL CONCRETE STRENGTH TO BE 30MPa
3. MINIMUM COVER TO REINFORCING TO BE 40mm
4. NUTS, BOLTS AND WASHERS SHOULD BE GRADE 316 STAINLESS STEEL
5. ALL FLANGES DRILLED TO BS 10 TABLE D

TYPICAL AIR VALVE CHAMBER DETAIL (LARGER THAN DN250mm)

SCALE 1:20

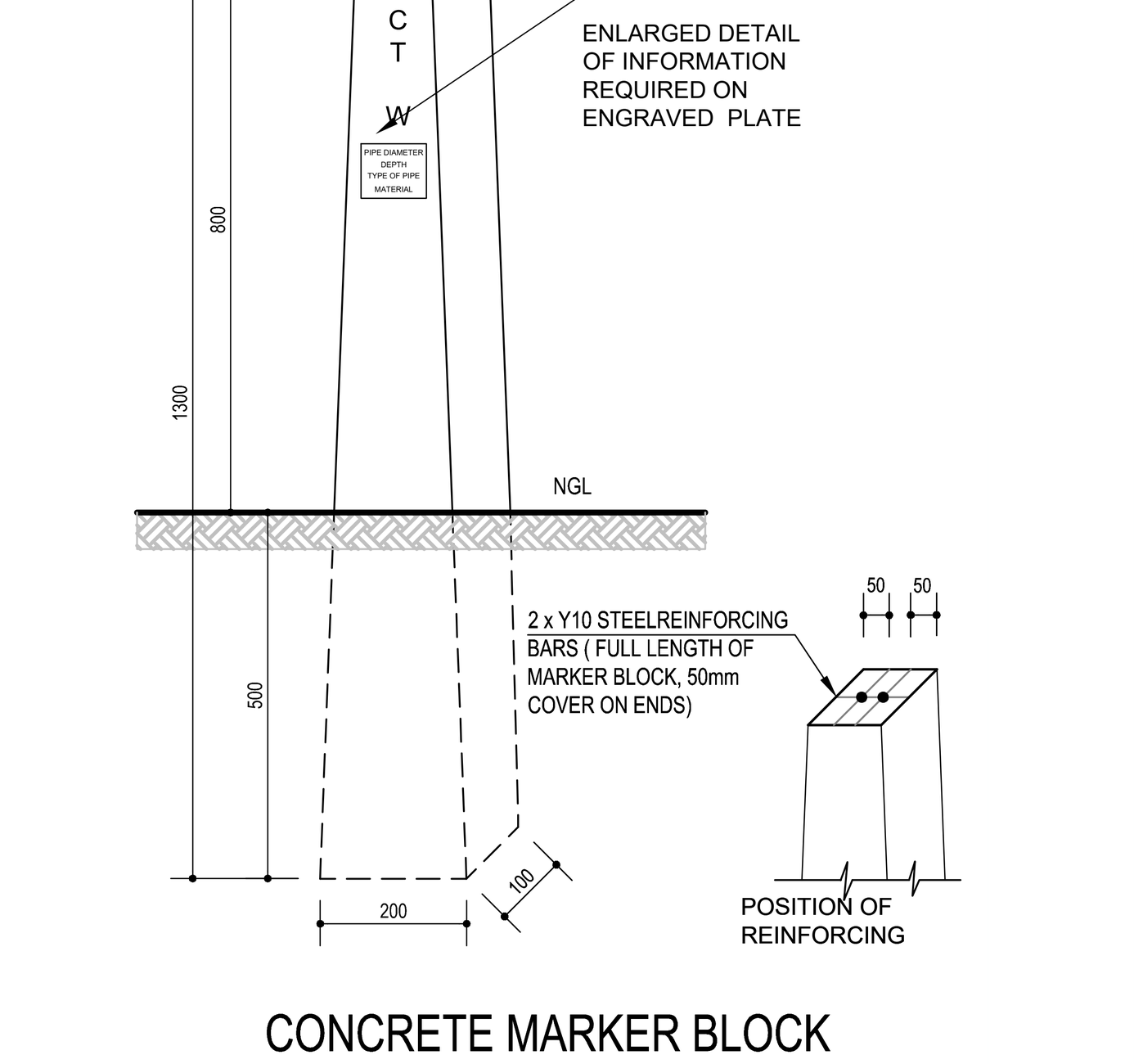

CONCRETE MARKER BLOCK

SCALE 1:10

IDENTIFICATION OF PIPE AND SLEEVE POSITIONS :

E = ELECTRICAL
T = TELKOM
W = WATER
S = SEWER
V = VALVE

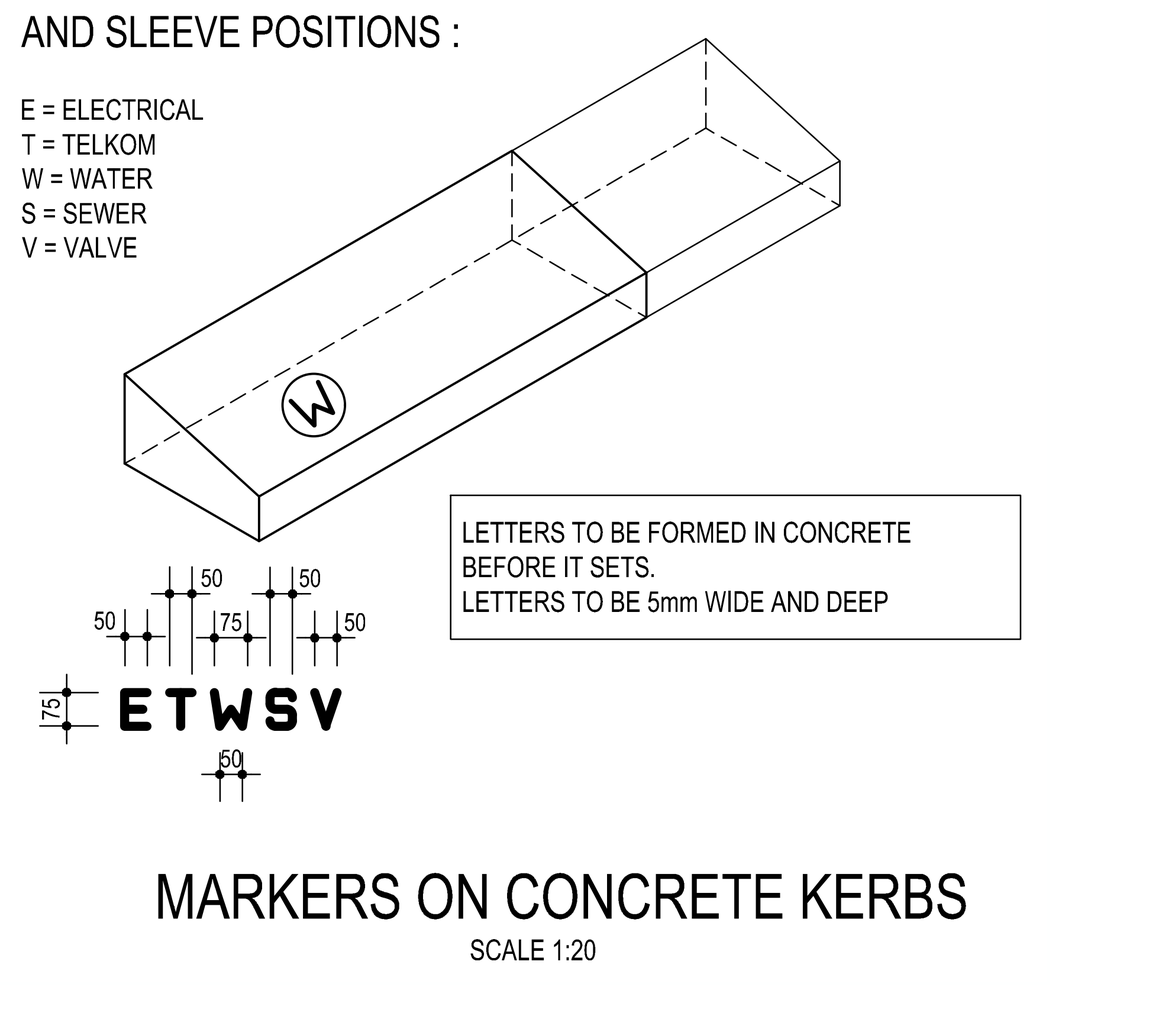

MARKERS ON CONCRETE KERBS

SCALE 1:20

NOTES / LEGEND

APPROVED BY COUNCIL / CLIENT		
CITY ENGINEER / CLIENT	REG. NO.	DATE

AMENDMENTS CODE

A,B,C... / : BEFORE TENDER	/A : BY CLIENT
T0 / : TENDER DRAWING	/B : BY ARCHITECT
0,1,2,3.../ : AFTER TENDER	/C : BY MECHANICAL OR ELECTRICAL
Z / : AS BUILT	/D : BY BVi
	/E : BY OTHER ( )

DATE	INITIAL	No./CODE	REVISION DESCRIPTION
12/02/2026	FMG	T0/D	ISSUE FOR TENDER

CLIENT: STELLENBOSCH MUNICIPALITY • UMASIPALA • MUNISIPALITEIT

• ENGINEERING • PROCUREMENT • MANAGEMENT

PROVINCE	OFFICE	☎	E-MAIL
Gauteng	Pretoria	(012) 940-1111	pta@bvigp.co.za
	Polokwane	(015) 291-5400	js@bvilp.co.za
Free State	Bloemfontein	(051) 447-2137	bfn@bvifs.co.za
	Welkom	(057) 353-2499	wel@bvifs.co.za
Northern Cape	Upington	(054) 337-6600	upt@bvinc.co.za
	Springbok	(027) 712-3614	spk@bvinc.co.za
KwaZulu Natal	Durban	(031) 266-8382	dbn@bvikn.co.za
	Empangeni	(035) 772-6112	emp@bvikn.co.za
Eastern Cape	Port Elizabeth	(041) 373-4343	bviec@mweb.co.za
	East London	(043) 735-3889	Bk@bviec.co.za
Western Cape	Cape Town	(021) 527-7000	cpt@bviwc.co.za

Visit or contact us online at www.bvigroup.co.za

Registration no. 1998/000157/07

PROJECT

REALIGNMENT OF THE R44/R310 AND ALEXANDER STREET INTERSECTION

DRAWING TITLE

STANDARD DETAILS WATER

APPROVED BY BVi		
ENGINEER/TECHNOLOGIST	REG. NO.	DATE
SCALE: AS SHOWN @A0	DRAWN: NADIR FALA	
DESIGNED: FM GREEFF	CHECKED: FM GREEFF	
PLAN NUMBER: 34092.00-143-01	REVISION NO.: T0	DATE SAVED: 15 August 2025

34092.00-142-01-REVT0_(STANDARD DETAILS WATER).DWG

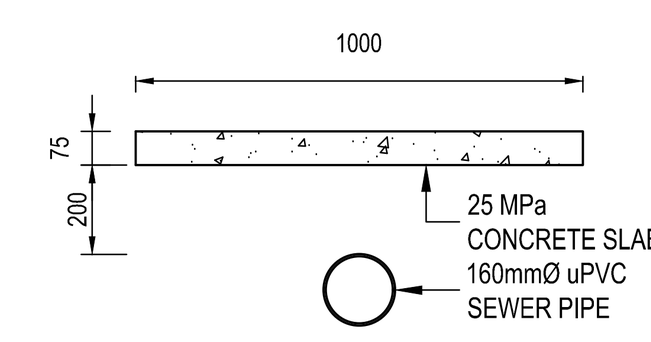

PROTECTIVE uPVC PIPE COVER SLAB
SCALE 1:20

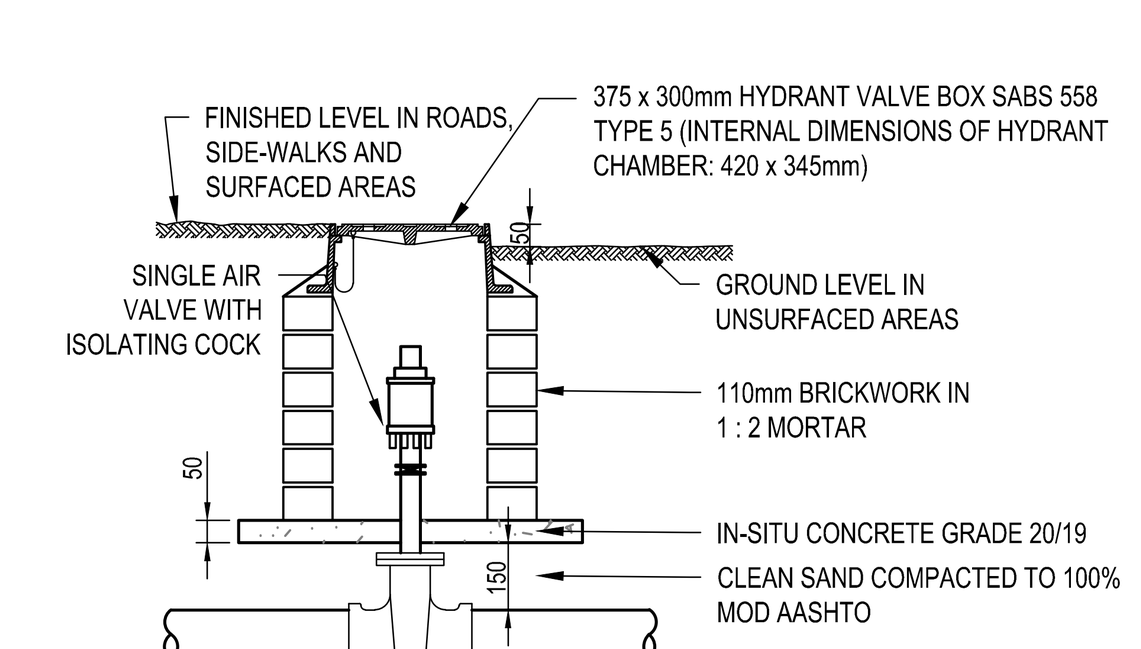

TYPICAL SECTION FOR AIR-VALVE CHAMBER (≤ 250Ø) FOR PVC-U PIPELINES
SCALE 1:20

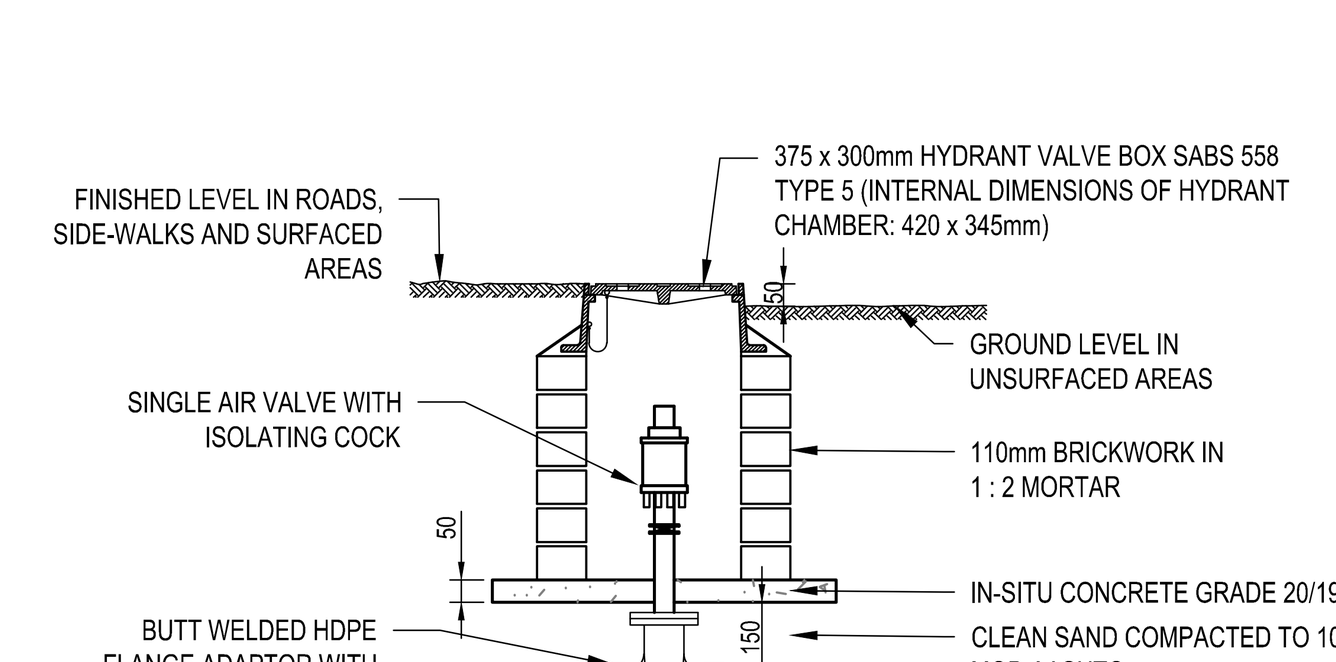

TYPICAL SECTION FOR AIR-VALVE CHAMBER FOR HDPE PIPELINES (SMALLER THAN DN250mm)
SCALE 1:20

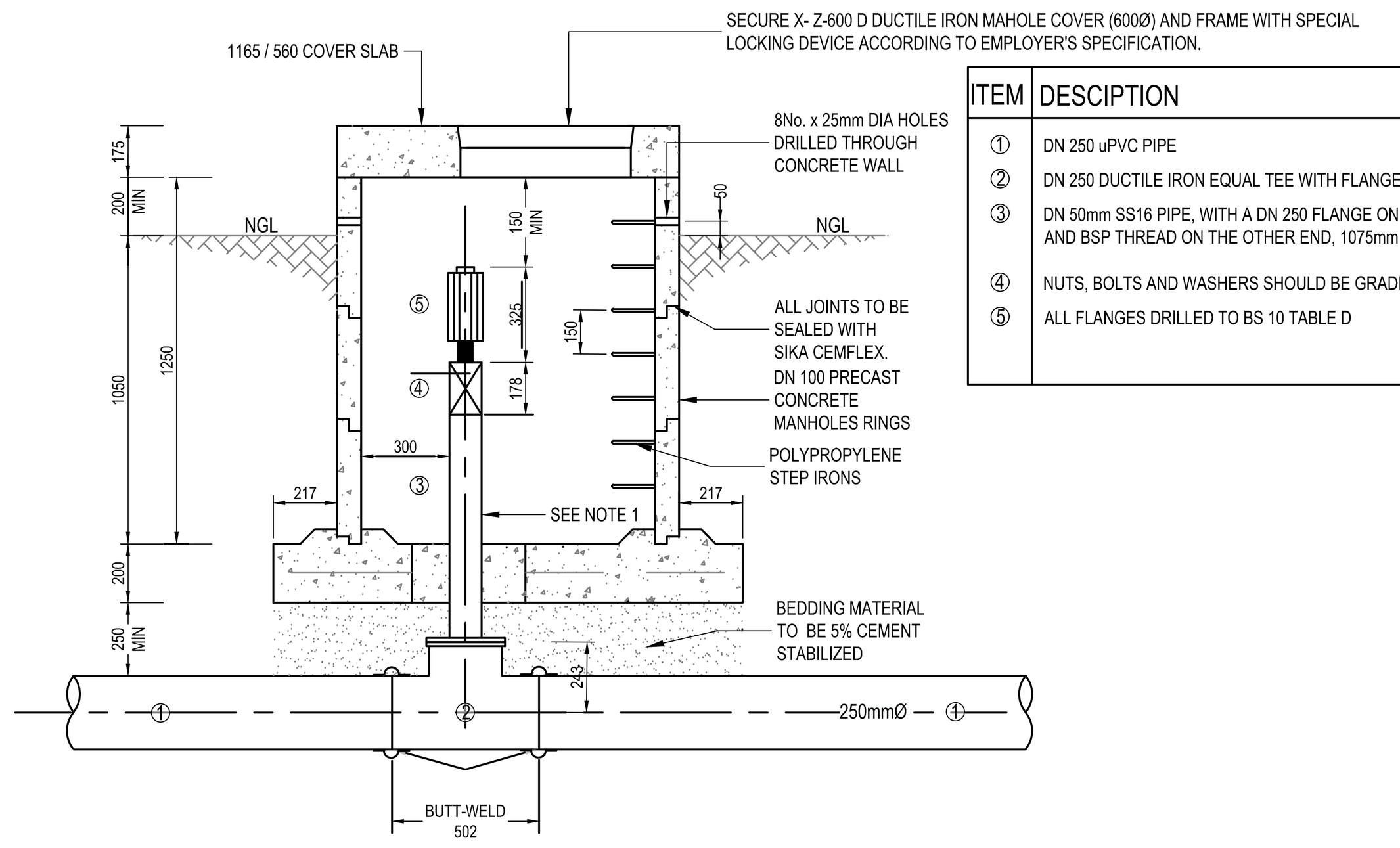

ITEM	DESCIPTION
①	DN 250 uPVC PIPE
②	DN 250 DUCTILE IRON EQUAL TEE WITH FLANGED BRANCH
③	DN 50mm SS16 PIPE, WITH A DN 250 FLANGE ONE END AND BSP THREAD ON THE OTHER END, 1075mm LONG
④	NUTS, BOLTS AND WASHERS SHOULD BE GRADE 316
⑤	ALL FLANGES DRILLED TO BS 10 TABLE D

NOTE:
1. LENGTH OF FLANGED STUB TO BE DETERMINED ON SITE TO ENSURE THAT AIR VALVE INTAKE AREA IS LOCATED ABOVE LEVEL OF DRAINAGE HOLES DRILLED THROUGH WALL
2. ALL CONCRETE STRENGTH TO BE 30MPa
3. MINIMUM COVER TO REINFORCING TO BE 40mm
4. NUTS, BOLTS AND WASHERS SHOULD BE GRADE 316 STAINLESS STEEL
5. ALL FLANGES DRILLED TO BS 10 TABLE D

TYPICAL AIR VALVE CHAMBER DETAIL (LARGER THAN DN250mm)
SCALE 1:20

1 - HYDRANT TEE (110/160mm SOCKETED x 80mm FLANGED)
2 - COMPRESSION FLANGED ADAPTOR WITH STEEL BACKING RING
3 - HDPE 63mm PE PN 12.5
4 - COMPRESSION REDUCING TEE Ø63mmxØ50mmxØ63mm
5 - 63mm COMPRESSION END CAP
6 - 50mm 90° COMPRESSION E1100
7 - 50mm COMPRESSION END CAP
8 - REDUCER TO 63mm
9 - HDPE 50mm PE100 PN12.5
10 - 63mm BRASS BALL VALVE AND ZX HDPE MALE ADAPTOR

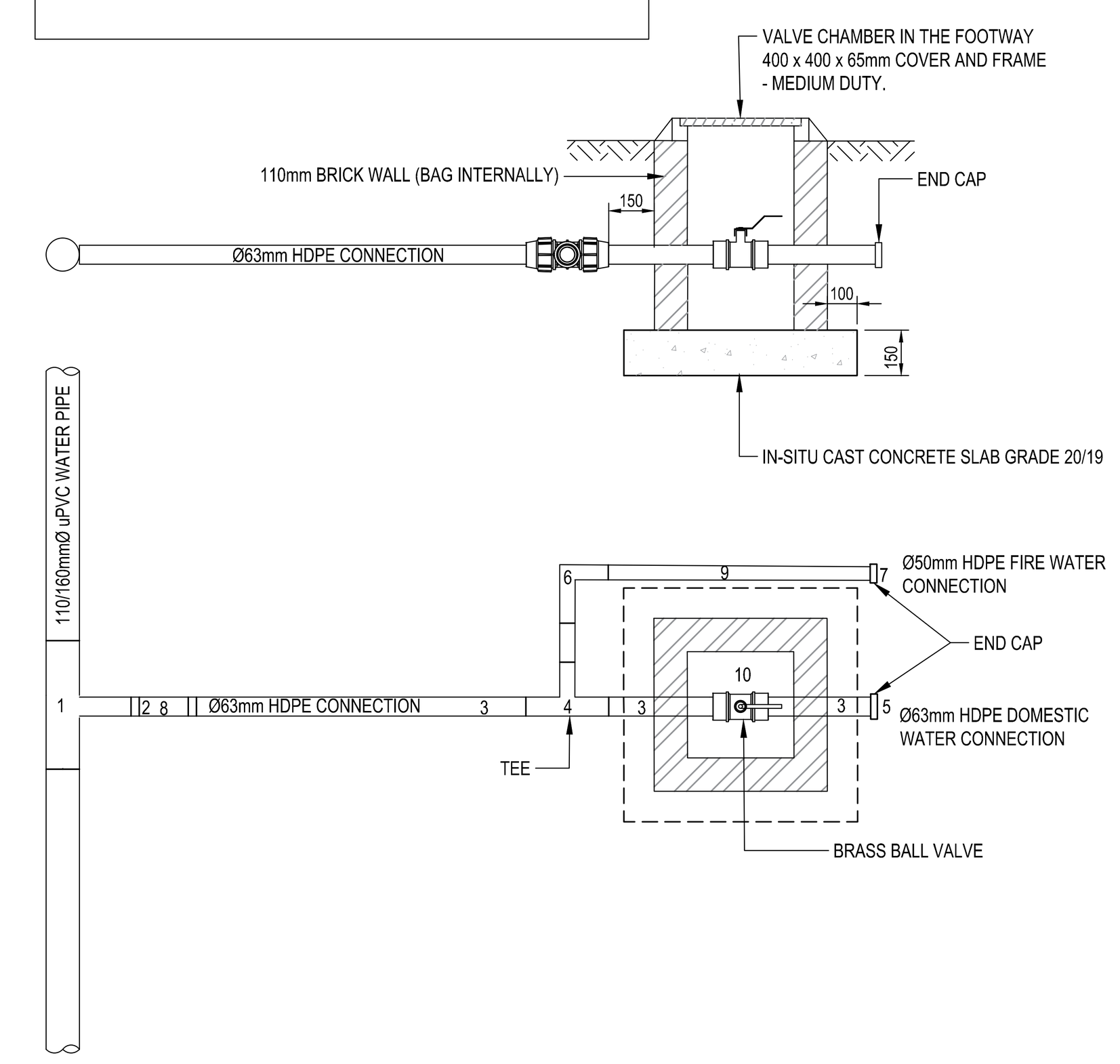

TYPICAL WATER CONNECTION BOX FOR A Ø63mm CONNECTION (*ONLY IF REQUIRED)

WATER NOTES:

1. ALL WATER PIPELINES EQUAL TO AND LARGER THAN DIAMETER 75MM TO BE uPVC CLASS 12 HEAVY DUTY TO SANS 966 WITH SPIGOT AND SOCKET RUBBER RING JOINTS UNLESS OTHERWISE INDICATED.
2. FITTINGS TO uPVC PIPES TO BE DUCTILE IRON (EN 12842), FUSION BONDED THERMOPLASTIC COATED INTERNALLY AND EXTERNALLY TO MINIMUM 0.25mm THICKNESS, UNLESS OTHERWISE INDICATED.
3. VALVES SHALL BE IN ACCORDANCE WITH SABS 1200 & SABS 644/ 1974. ALL VALVES MUST BE LEFT HAND CLOSING AND FITTED WITH A NON-RISING SPINDLE WITH CAP TOP FITTED WITH S/S BOLTS AND NUTS. REFER TO CoCT DRAWING W1 FOR VALVE AND CHAMBER DETAILS.
4. FIRE HYDRANTS SHALL BE IN ACCORDANCE WITH SABS 1200, COMPLY WITH THE LOCAL FIRE DEPARTMENT STANDARD REGULATIONS. HYDRANTS MUST HAVE 65mm LONDON ROUND THREAD. VALVE TO BE RIGHT HAND OPENING AND FITTED WITH A SPINDLE CAP TOP FITTED WITH S/S BOLTS AND NUTS. REFER TO DRAWING xxxxx.xx-143-01 FOR FIRE HYDRANT AND DETAILS.
5. HOUSE CONNECTION SADDLES TO BE MAGNUM PN16 DUCTILE IRON WITH 0.25mm PLASCOAT PPA 571 HES COATING WITH STAINLESS STEEL BOLTS AND NUTS. ALL WATER HOUSE CONNECTION PIPES TO BE HPDE CLASS 16, TYPE 5 COMPLYING WITH SABS 533 USING COMPRESSION FITTING AND JOINTS. REFER TO CoCT W3 FOR TYPICAL HOUSE CONNECTION DETAILS.
6. MINIMUM COVER ON PIPES: UP TO 75mm SHALL BE 0,6m AND FOR 110mm UP TO 250mm SHALL BE 1,0m
7. ONLY STAINLESS-STEEL BOLTS, NUTS AND WASHERS TO BE USED ON ALL UNDERGROUND SERVICES INCLUDING SADDLES, HYDRANTS, SPECIALS, ETC., WRAPPED IN DENSO TAPE.
8. PIPES SHALL NOT BE TESTED AGAINST ISOLATING VALVES. TEMPORARY BLANK FLANGES OR END CAPS WILL BE INSTALLED TO TESTS AGAINST.
9. THE CONTRACTOR SHALL SUBMIT AS-BUILT INFORMATION OF THE UNDERGROUND SERVICES TO THE ENGINEER FOR APPROVAL BEFORE THE START OF THE ROAD LAYER WORK OR ANY BULK FILL.
10. ALL MANHOLES SHALL BE WATER TIGHT.
11. ALL BENCHING INSIDE MANHOLES/CHAMBERS FLOORS SHALL BE RENDERED IN 20mm THICK 1:3 CEMENT MORTAR AND FINISHED SMOOTH AND TRUE WITH A STEEL TROWEL AND ROUNDED AT CORNERS AND EDGES.
12. ALL NEWLY INSTALLED PIPES SHALL BE SUBJECTED TO ACCEPTANCE TESTS (AIR TIGHTNESS/ HYDRAULIC TESTS) TO SANS 1200 LD. THE WATER MAINS SHALL BE TESTED IN SECTIONS BETWEEN MANHOLES/CHAMBERS AND OTHER PLUMBING FIXTURES. ALL TEST RESULTS SHALL BE RECORDED AND PRESENTED TO THE ENGINEER.
13. AFTER BACKFILLING AND COMPACTION OF FILL OVER PIPES, THE WATER SHALL BE RETESTED TO CERTIFY THAT IT HAS NOT BEEN DISTURBED OR DAMAGED DURING BACKFILLING.
14. COVERS AND FRAMES SHALL BE GROUTED SOLIDLY ONTO THE SHAFTS. THE ENGINEERS WILL DIRECT HOW CONCRETE SURROUNDS ARE TO BE FINISHED OFF TO SUIT SURROUNDING SURFACES.
15. FH TYPE 1 - 65Ø PROUD-OF-GROUND, INCL. OF CONC. SURROUND SLEEVE, U.O.S.
16. FH TYPE 2 - TWIN BOOSTER, U.O.S.
17. INTERNAL PIPEWORK/PLUMBING SHALL HAVE A TRANSITION BETWEEN THE EXTERNAL PIPE MATERIAL AND THE INTERNAL PIPE MATERIAL, WHICH HAS TO BE APPROVED BY THE ENGINEER IN WRITING BEFORE INSTALLATION AND/OR ORDERING OF MATERIALS, U.O.S
18. CIVIL WORKS TERMINATE ±1.0m OUTSIDE OF THE BUILDING. ENVELOPE AT THE ISOLATION/SHUT-OFF VALVE. INTERNAL PLUMBING SHALL BE DONE FROM THIS TERMINATION POSITION AS PER WET SERVICES ENGINEER'S DRAWING, U.O.S.
19. ALL MASONRY USED IN CONSTRUCTION OF MANHOLES OR CHAMBERS SHALL BE R.O.K. BRICKS WITH MIN. 14MPa STRENGTH, SOLID CLAY BRICKS.
20. CONTRACTOR MUST SUBMIT AS BUILT SURVEY (FROM EXTERNAL REGISTERED SURVEYOR), DRAWING DATA OF ALL CONSTRUCTED SERVICES INCLUSIVE (INVERT LEVELS, COVER LEVELS AND PIPE SLOPES) WHERE APPLICABLE.

WATER DETAIL DRAWINGS:

1. REFER TO COCT DRAWINGS W4A AND W4B OF TYPICAL BULK WATER METER AND CHAMBER DETAILS.
2. REFER TO DWG 30964.28-143.01 FOR WATER DETAILS.

GENERAL NOTES:

1. ALL WORK TO BE DONE IN ACCORDANCE WITH SABS/SANS1200 & THE PROJECT SPECIFICATIONS.
2. ALL LEVELS ARE IN METERS ABOVE MEAN SEA LEVEL UNLESS OTHERWISE STATED.
3. DO NOT SCALE. USE FIGURED DIMENSIONS ONLY. ALL LEVELS TO BE CHECKED BEFORE CONSTRUCTION COMMENCES AND DISCREPANCIES REPORTED TO THE ENGINEER.
4. THESE DRAWING SHALL BE READ IN CONJUNCTION WITH THE ARCHITECTS DRAWINGS (IF APPLICABLE).
5. ALL SETTING OUT COORDINATES AND DIMENSIONS SHOWN ON THIS DRAWING SHALL BE VERIFIED BY CONTRACTOR IN ORDER TO ENSURE THAT ON-SITE REQUIREMENTS ARE MET. ANY DISCREPANCIES MUST BE REPORTED TO THE ENGINEER PRIOR TO THE ORDERING OF ANY MATERIALS AND/OR THE COMMENCEMENT OF CONSTRUCTION.
6. THE POSITION AND DEPTH OF ALL EXISTING SERVICES ON AND OFF THE SITE WERE AFFECTED BY THE WORKS, SHALL BE CONFIRMED PRIOR TO THE COMMENCEMENT OF ANY CONSTRUCTION WORK ON THE INSTALLATION OF SERVICES. THE CONTRACTOR SHALL PROTECT ALL EXISTING SERVICES FROM DAMAGE THROUGHOUT CONSTRUCTION.
7. THE CONTRACTOR MUST IMMEDIATELY NOTIFY THE ENGINEER OF ANY EXISTING SERVICES FOUND WHICH ARE NOT INDICATED ON THE DRAWINGS.

DEMOLITION NOTES:

1. ALL DEMOLITION WORKS TO BE DONE IN ACCORDANCE WITH RELEVANT SECTIONS OF SANS 1200C.
2. THE CONTRACTOR WILL PRIOR TO THE START OF CONSTRUCTION AND/OR DEMOLITION WORKS CHECK AND EXPOSE TIE-IN POINTS AND VERIFY ALL EXISTING SERVICES INVERT LEVELS AND EXTENT OF EXISTING UNDERGROUND SERVICES.
3. ALL EXISTING MANHOLES AND VALVE CHAMBERS OR STRUCTURES SITUATED IN THE DEMOLITION AREA SHALL BE SAFEGUARDED DURING THE DEMOLITION WORKS.
4. ALL EXISTING FIXTURES (ROAD SIGNS, BENCHES, POSTS, ETC) SITUATED IN THE DEMOLITION WORKS AREA SHALL BE SAFELY REMOVED AND STORED FOR RE-USE, UNLESS OTHERWISE INSTRUCTED BY ENGINEER
5. DURING DEMOLITION WORK, ALL MECHANICAL SYSTEMS AND BUILDING SERVICES SERVING OCCUPIED AREAS SHALL BE MAINTAINED OPERATIONAL. WHERE SYSTEM OR SERVICE INTERRUPTIONS ARE REQUIRED, ALTERNATIVE ARRANGEMENTS MUST BE CONFIRMED WITH THE ENGINEER AND FACILITIES MANAGER PRIOR TO ANY DEMOLITION WORKS.
6. AREAS OF DEMOLITION ARE APPROXIMATE; IT IS THE CONTRACTOR'S RESPONSIBILITY TO COORDINATE DEMOLITION WITH EXISTING CONDITIONS & NEW CONSTRUCTION.
7. EXISTING SERVICES AND STRUCTURES TO REMAIN SHALL BE PROTECTED DURING DEMOLITION AND NEW WORK CONSTRUCTION ACTIVITIES. EXISTING FLOORING AND FINISHES TO REMAIN UNLESS OTHERWISE CONFIRMED BY THE ENGINEER.
8. THE EXTENT OF DEMOLITION INDICATED IS BASED ON AS BUILT DRAWINGS PROVIDED BY THE OWNER AND FIELD OBSERVATIONS. ANY DISCREPANCIES BETWEEN ACTUAL CONDITIONS AND THOSE INDICATED ARE TO BE BROUGHT TO THE ATTENTION OF THE ENGINEER AS SOON AS DISCREPANCIES ARE DISCOVERED, BEFORE DEMOLITION IS TO CONTINUE IN SUCH AREA.
9. DISPOSAL OF MATERIAL GENERATED FROM DEMOLITION WORKS SHALL BE SORTED AND DISPOSED OF AT A REGISTERED AND APPROVED DUMP FACILITY ACCORDING TO THE APPROVED DEMOLITION PLAN
10. ALL EXISTING PAVING BLOCKS AND PRECAST KERBS SHALL BE UPLIFTED AND TEMPORARILY STOCKPILED FOR RE-SUE, UNLESS OTHERWISE INSTRUCTED BY THE ENGINEER.
11. MATERIAL GENERATED FORM DEMOLITION WORKS TO STRUCTURAL ELEMENTS (SUCH AS BRICKS) SHALL BE STOCKPILED IN A SEPARATE TEMPORARY STOCKPILE FOR RE-USE. CRUSHING OF MATERIAL FOR RE-USE IN PERMANENT WORKS ONLY TO BE DONE ON APPROVAL OF THE ENGINEER AND APPROPRIATE TESTING.
12. NO TREES SHALL BE REMOVED OR TRIMMED UNLESS SO INSTRUCTED BY THE ENGINEER.
13. ALL TREE ROOTS BELOW NEW BUILDING FOOTPRINTS SHALL BE REMOVED TO A DEPTH OF 1.0M BELOW THE NEW FOUNDATION LEVELS. REINSTATEMENT OF THESE EXCAVATIONS SHALL BE DONE WITH MINIMUM G7 QUALITY MATERIAL COMPACTED TO 97% MDD (100% FOR SAND) TO ACHIEVE CBR OF 15% IN TOP 150mm.
14. ALL EXISTING UNDERGROUND SERVICES PROVIDING CONNECTIONS TO THE BUILDINGS WHICH SHALL BE DEMOLISHED WILL BE REMOVED. REINSTATEMENT OF THESE SERVICE TRENCHES SHALL BE DONE WITH MINIMUM G7 QUALITY MATERIAL COMPACTED TO 97% MDD (100% FOR SAND) TO ACHIEVE CBR OF 15% IN TOP 150mm.

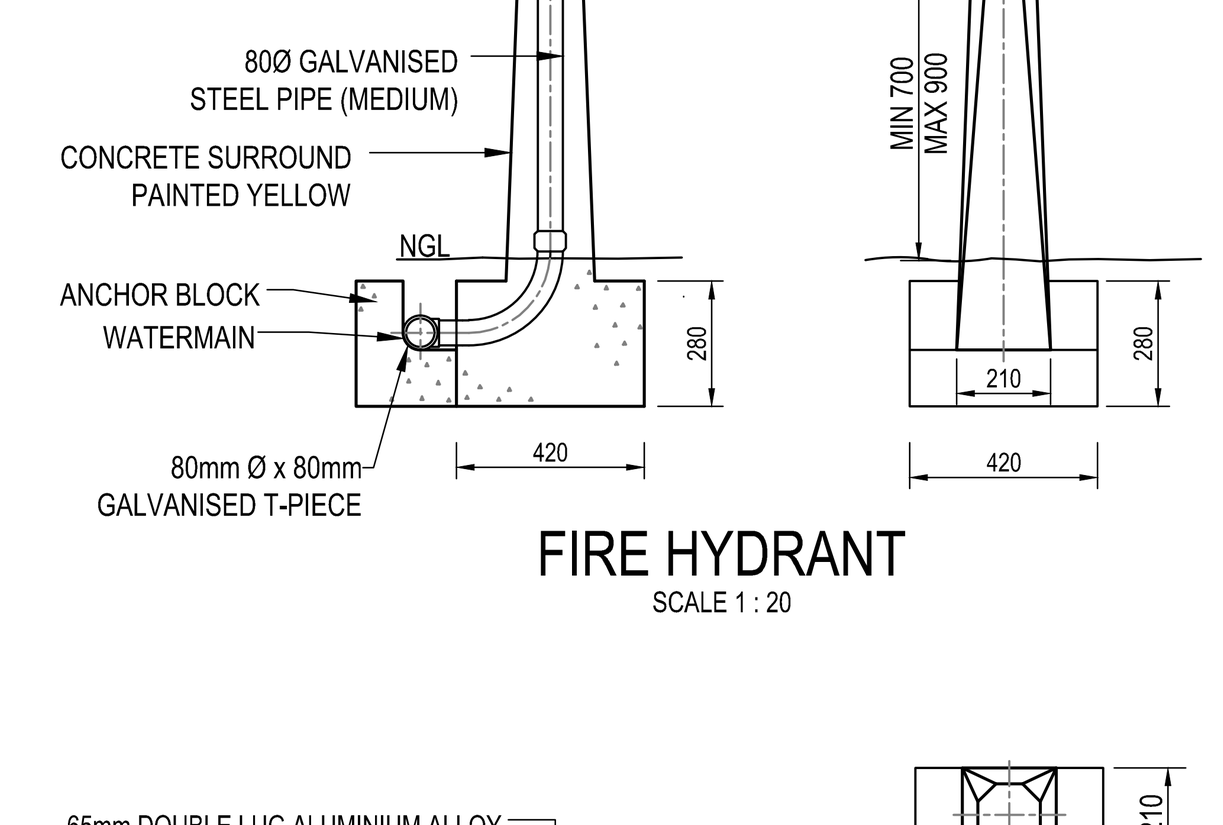

FIRE HYDRANT
SCALE 1 : 20

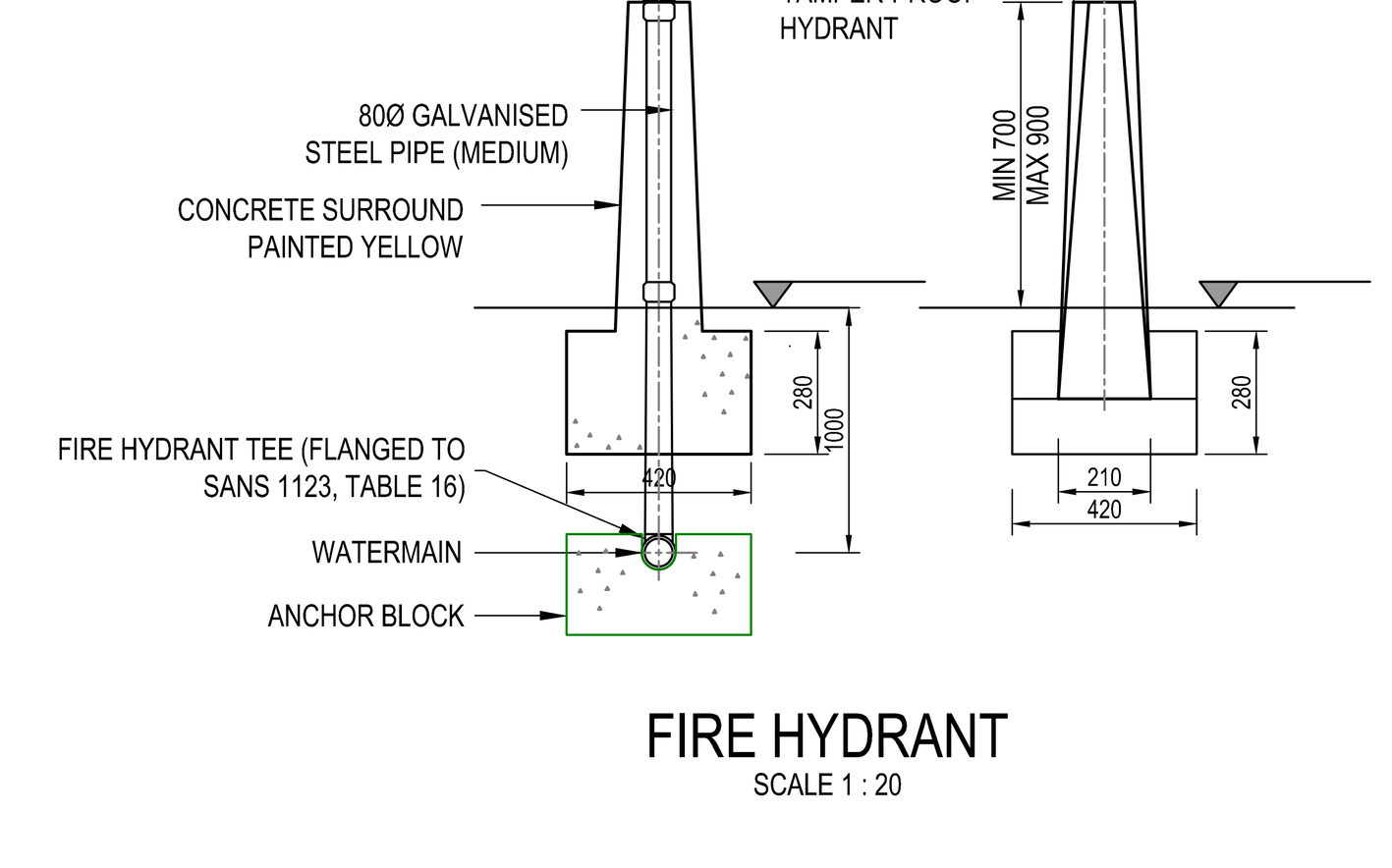

FIRE HYDRANT
SCALE 1 : 20

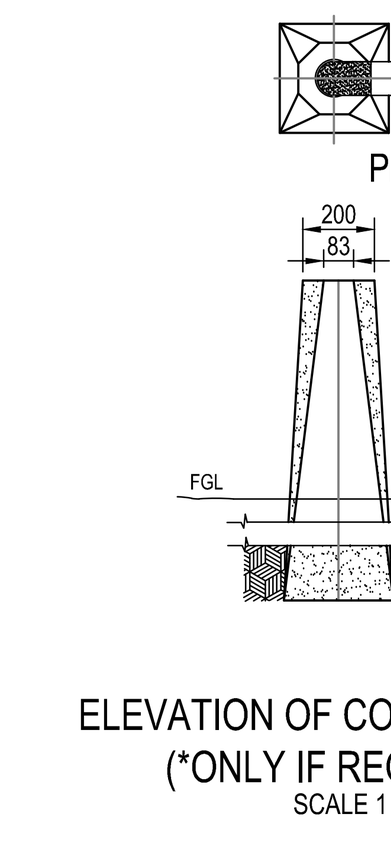

ELEVATION OF CONCRETE BASE (*ONLY IF REQUIRED)
SCALE 1 : 25

1 - SADDLE 110mm x 50mmØ
2 - HDPE 50mmØ PE PN 16
3 - 50mmØ BRASS BALL VALVE AND ZX HDPE MALE ADAPTOR
4 - 50mmØ COMPRESSION END CAP

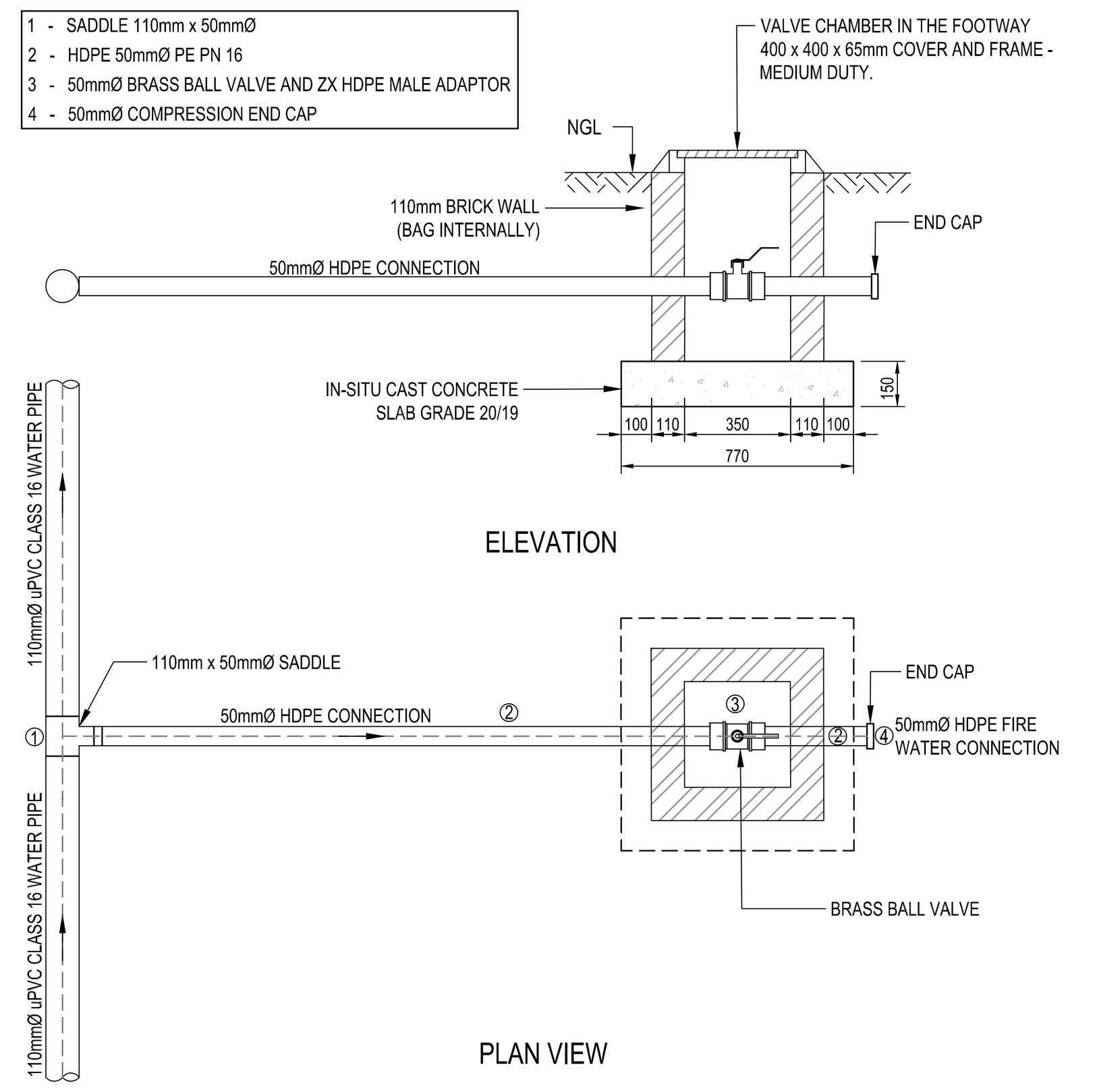

TYPICAL WATER CONNECTION BOX FOR A 50mmØ HOUSE REEL CONNECTION (*ONLY IF REQUIRED)
SCALE 1:20

NOTES / LEGEND

APPROVED BY COUNCIL / CLIENT

CITY ENGINEER / CLIENT — REG. NO. — DATE

AMENDMENTS CODE

A,B,C.... / : BEFORE TENDER
T0 / : TENDER DRAWING
0,1,2,3.../ : AFTER TENDER
Z / : AS BUILT

/A : BY CLIENT
/B : BY ARCHITECT
/C : BY MECHANICAL OR ELECTRICAL
/D : BY BVi
/E : BY OTHER ( )

DATE	INITIAL	No./CODE	REVISION DESCRIPTION
12/02/2026	FMG	T0/D	ISSUE FOR TENDER

CLIENT: STELLENBOSCH — MUNICIPALITY • UMASIPALA • MUNISIPALITEIT

bvi — 50 YEAR CELEBRATION EST 1967-2017 — • ENGINEERING • PROCUREMENT • MANAGEMENT

Registration no. 1998/000157/07

PROVINCE	OFFICE	☎	E-MAIL
Gauteng	Pretoria	(012) 940-1111	pta@bvigp.co.za
	Polokwane	(015) 291-5400	js@bvilp.co.za
Free State	Bloemfontein	(051) 447-2137	bfn@bvifs.co.za
	Welkom	(057) 353-2499	wel@bvifs.co.za
Northern Cape	Upington	(054) 337-6600	upt@bvinc.co.za
	Springbok	(027) 712-3614	spk@bvinc.co.za
KwaZulu Natal	Durban	(031) 266-8382	dbn@bvikn.co.za
	Empangeni	(035) 772-6112	emp@bvikn.co.za
Eastern Cape	Port Elizabeth	(041) 373-4343	bviec@mweb.co.za
	East London	(043) 735-3889	Bk@bviec.co.za
Western Cape	Cape Town	(021) 527-7000	cpt@bviwc.co.za

Visit or contact us online at www.bvigroup.co.za

PROJECT: REALIGNMENT OF THE R44/R310 AND ALEXANDER STREET INTERSECTION

DRAWING TITLE: STANDARD DETAILS WATER

APPROVED BY BVi

ENGINEER/TECHNOLOGIST — REG. NO. — DATE

SCALE	AS SHOWN @A0	DRAWN	NADIR FALA
DESIGNED	FM GREEFF	CHECKED	FM GREEFF
PLAN NUMBER	34092.00-143-02	REVISION NO.	T0
DATE SAVED	15 August 2025		

34092.00-142-01-REVT0_(STANDARD DETAILS WATER).DWG

Thursday, 11 July 2024 14:19:00

BENCHMARKS

DESCRIPTION	X	Y	ELEVATION
ATP1	3756221.040	13624.060	96.910
ATP2	3756315.010	13642.240	95.990
ATP3	3756425.980	13660.430	95.874
ATP4	3756239.250	13517.600	98.101
ATP7	3756736.980	13758.010	95.380
ATP9	3756136.318	13575.038	98.962
LD1	3756524.430	13625.425	96.770
O29D	3756204.120	13348.020	100.014
O31C	3756830.300	13739.590	94.830
RG1	3756621.390	13598.664	97.390
RG2	3756630.094	13688.400	96.250
RG5	3756731.683	13742.469	95.540
WP3	3756828.953	13722.723	95.830

ADAM TAS ROAD
LIMIT OF CONSTRUCTION
STRAND ROAD
LIMIT OF CONSTRUCTION
INSTALL 4x160mmØ ADDITIONAL ELECTRICAL SLEEVES
ATP7
NEW SLIP LANE
RG5
INSTALL 4x160mmØ ADDITIONAL ELECTRICAL SLEEVES
EXISTING PRASA RAILWAY LINES
STELLENBOSCH STATION
66kV 'A' CABLE
EXISTING PEDESTRIAN SIDEWALK TO REMAIN AS IS
REVISED MEDIAN
66kV OC KILLED CABLE
LOWER EXISTING TELECOMMUNICATION AND ELECTRICAL CABLES, ADD 3x110mmØ + 6x160mmØ ADDITIONAL SLEEVES
66kV 'B' CABLES
INSTALL 6x160mmØ ADDITIONAL ELECTRICAL SLEEVES
NEW ACCESS ROAD
NEW ACCESS ROAD
RG2
LOWER EXISTING TELECOMMUNICATION AND ELECTRICAL CABLES, ADD 3x110mmØ + 4x160mmØ ADDITIONAL SLEEVES
EXISTING INTERSECTION TO BE CLOSED OFF
HEROLD STREET
INSTALL 6x160mmØ ADDITIONAL ELECTRICAL SLEEVES
EXISTING STORMWATER CHANNEL TO BE FORMALIZED VIA UNDERGROUND PIPE SYSTEM
EXISTING BUILDING TO BE DEMOLISHED AND REBUILD
INSTALL10x160mmØ ADDITIONAL ELECTRICAL SLEEVES
PROPOSED POSITION AND LAYOUT OF NEW ELECTRICAL SUB-STATION
11kV FEEDER CABLES
66kV OC CABLES
ADAM TAS ROAD
LIMIT OF CONSTRUCTION
EDGE OF PROPOSED SIDEWALK
INSTALL 4x160mmØ ADDITIONAL ELECTRICAL SLEEVES
STASIE STREET
RIGHT OF WAY SERVITUDE
FURROW SERVITUDE
NEW EMBAYMENT FOR ACCESS TO EXISTING PROPERTIES
11kV FEEDER CABLES
LOWER EXISTING TELECOMMUNICATION AND ADD 3x110mmØ ADDITIONAL SLEEVES
NEW CARRIAGEWAY CROSSING FOR ACCESS TO NEW ELECTRICAL SUB-STATION
DU TOIT STREET
INSTALL 4x160mmØ ADDITIONAL ELECTRICAL SLEEVES
66kV CABLE
LIMIT OF CONSTRUCTION
11kV OLCABLES

NOTES / LEGEND

SERVICES LEGEND:
- EXISTING ELECTRICAL CABLES
- NEW ELECTRICAL CABLES
- EXISTING TELECOMMUNICATION LINE
- NEW TELECOMMUNICATION LINE
- TELECOMMUNICATION HOUSE CONNECTION
- SINGLE 700X700 TELECOMMUNICATION MANHOLE
- SINGLE 450X450 TELECOMMUNICATION MANHOLE
- S - 110mmØ DUCT
- L - 160mmØ DUCT

NOTE:
- OFFSETS FROM CADASTRAL BOUNDARIES SHOULD BE AS PER DETAILED CROSS SECTION DIMENSIONS, NO SCALING OFF THIS DRAWING ALLOWED.
- ALL EXISTING ELECTRICAL & TELECOMMUNICATION INFRASTRUCTURE TO BE ADJUSTED TO MATCH NEW DESIGN LEVELS WHERE REQUIRED.

APPROVED BY COUNCIL / CLIENT

CITY ENGINEER / CLIENT — REG. NO. — DATE

AMENDMENTS CODE

A,B,C... / : BEFORE TENDER
T0 / : TENDER DRAWING
1,1,2,3... / : AFTER TENDER
2 / : AS BUILT

A: BY CLIENT
B: BY ARCHITECT
C: BY MECHANICAL OR ELECTRICAL
D: BY BVI
E: BY OTHER ( )

DATE	INITIAL	No./CODE	REVISION DESCRIPTION
20/07/2024	FMG	T0/D	ISSUED FOR TENDER

CLIENT

STELLENBOSCH
UMASIPALA • UMASIPALATHI
MUNICIPALITY • UMASIPALA • MUNISIPALITEIT

bvi 50 YEAR CELEBRATION EST 1967-2017
• ENGINEERING • PROCUREMENT • MANAGEMENT
CESA
Registration No. 1998/003115/07

PROVINCE	OFFICE		E-MAIL
Gauteng	Pretoria	(012) 842-1111	pta@bvi.co.za
	Polokwane	(015) 291-5400	plk@bvi.co.za
Free State	Bloemfontein	(051) 447-2121	bfn@bvi.co.za
	Welkom	(057) 353-0456	wel@bvi.co.za
Northern Cape	Upington	(054) 337-4850	upt@bvi.co.za
	Springbok	(027) 712-8014	spk@bvi.co.za
KwaZulu-Natal	Durban	(031) 264-2552	dbn@bvi.co.za
	Empangeni	(035) 772-4112	emp@bvi.co.za
Eastern Cape	Port Elizabeth	(041) 373-2400	hbe@bvi.co.za
	East London	(043) 735-3885	fbi@bvi.co.za
Western Cape	Cape Town	(021) 527-7000	cpt@bvi.co.za

Visit us online at www.bvigroup.co.za

PROJECT

REALIGNMENT OF THE R44/R310 AND ALEXANDER STREET JUNCTION

DRAWING TITLE

ELECTRICAL AND TELECOMMUNICATION DUCT LAYOUT - PHASE 1

APPROVED BY BVI

ENGINEER/TECHNOLOGIST — REG. NO. — DATE

SCALE	1:300 @ A0	DRAWN	JAS
DESIGNED	FMG	CHECKED	LP

PLAN NUMBER	REVISION NO.	DATE SAVED
34092.00-190-01	T0	11 July 2024

O:\PROJECTS DRAWINGS\34000 - 34999\34092.00\CIVIL\TENDER DRAWINGS\34092.00-101-01 REVT0_(SERVICES LAYOUT).DWG

34092.00-101-01 REVT0_(SERVICES LAYOUT).DWG

0 10 50 100

1. GENERAL

1.1 THE CONTRACTOR SHALL CHECK ALL PROJECT DIMENSIONS ON SITE BEFOREHAND. ANY DIFFERENCES SHALL IMMEDIATELY BE REPORTED TO THE SITE ENGINEER.

1.2 ALL SANS SPECIFICATIONS MENTIONED IN THE NOTES, ON THE DRAWINGS AND IN THE PROJECT SPECIFICATIONS SHALL BE AVAILABLE ON SITE AT ALL TIMES.

1.3 ALL INSTRUCTIONS FROM THE ENGINEER SHALL BE WRITTEN IN THE SITE INSTRUCTION BOOK.

1.4 PRODUCTS DIFFERENT TO THOSE SPECIFIED MAY BE USED WITH THE ENGINEER'S PRIOR APPROVAL.

1.5 THE LIVE LOADS FOR WHICH THE STRUCTURE HAS BEEN DESIGNED ARE AS FOLLOWS:

ROOF SLAB 5 kPa

1.6 CARE SHALL BE TAKEN NOT TO DAMAGE WATERPROOFING MEMBRANES OR FILTERS DURING CONSTRUCTION WORK.

1.7 THESE NOTES ARE TO BE READ IN CONJUNCTION WITH THE DRAWINGS AND PROJECT SPECIFICATIONS.

2. EARTHWORKS, SOIL IMPROVEMENT AND FOUNDATIONS

2.1 ALL EARTHWORKS ARE TO BE DONE ACCORDING TO SANS 1200D.

2.2 SOIL IMPROVEMENT SHALL CONSIST OF THE FOLLOWING IN ACCORDANCE WITH THE SPECIALIST GEOTECHNICAL ENGINEER'S RECOMMENDATIONS.

2.3 CONTINUOUS SURFACE WAVE (CSW) TESTING SHALL BE PERFORMED ON THE IMPROVED SOIL.

2.4 ALL EXCAVATIONS ARE TO BE INSPECTED AND APPROVED IN WRITING BY THE GEOTECHNICAL ENGINEER BEFORE THE BLINDING OR FOUNDATION IS BEING CAST.

2.5 OVER-EXCAVATED PORTIONS ARE TO BE FILLED WITH MASS CONCRETE (15MPa/19mm) AT THE CONTRACTOR'S EXPENSE.

2.6 A 50 mm THICK BLINDING LAYER OF 15 MPa / 19 mm CONCRETE SHALL BE CAST UNDER ALL FOUNDATIONS OF CONCRETE STRUCTURE AS INDICATED ON THE DRAWINGS.

2.7 LAYERWORKS BELOW CONCRETE FOUNDATIONS AND SLABS AS PER DETAILS ONLY AFTER LEAK DETECTION DRAINAGE IS INSTALLED.

3. CONCRETE

3.1 ALL CONCRETE WORK SHALL BE DONE ACCORDING TO SANS 1200G. THE REQUIREMENTS FOR WATERTIGHT CONCRETE SHALL BE FOLLOWED STRICTLY.

3.2 THE CONCRETE MIX DESIGN PHILOSOPHY SHALL BE TO PRODUCE A LOW SHRINKAGE, DURABLE AND WATERTIGHT CONCRETE WITH AS LOW A HEAT OF HYDRATION AS POSSIBLE. IN THIS REGARD THE CONTRACTOR IS REFERRED TO CLAUSE PSG-5.5.1.5, PSG-5.5.1.7 AND PSG-5.5.1.8.

3.3 THE CONCRETE SPECIFICATION IS PROVIDED IN CLAUSE PSG-5.5.1.7 OF THE PROJECT SPECIFICATION, AND IN SUMMARY IS AS FOLLOWS:

MIN. 28 DAY STRENGTH	30 MPa/ 19 mm OR 22mm
MAX. 28 DAY STRENGTH	40 MPa/ 19 mm OR 22mm
WATER:BINDER RATIO	0,5 OR AS PER DESIGN
WATER CONTENT OF MIX <= 180 l/ m3 OR AS PER DESIGN	
CEMENTITIOUS MATERIAL:	BLEND OF 55-70% CEM I 42,5 or CEM II A-LL 42,5N AND 45-30% FLY ASH. TRIAL MIXES SHALL BE MADE WITH 30%, 32,5%, 35%, 37,5%, 40%, 42,5% AND 45% FLY ASH CONTENT AND 28 DAY CUBE RESULTS SUBMITTED TO THE ENGINEER FOR CONSIDERATION, UPON WHICH THE MOST APPROPRIATE CONCRETE MIX SHALL BE CHOSEN
ADDITIVE:	AS PER DESIGN

THE USE OF GGBS OR COREX SLAG WILL NOT BE ALLOWED.

3.4 THE VALUE FOR T1, THE FALL IN TEMPERATURE BETWEEN THE HYDRATION PEAK AND AMBIENT AS DEFINED BY BS 8007: 1987, HAS BEEN BASED ON STEEL FORMWORK, THEREFORE ONLY STEEL FORMWORK MAY BE USED, AND THE USE OF TIMBER FORMWORK IS STRICTLY FORBIDDEN.

3.5 ALL CASTING PROCEDURES, CONSTRUCTION METHODS AND POSITIONS OF CONSTRUCTION JOINTS SHALL IN OTHER ELEMENTS SHALL BE SUBMITTED TO THE ENGINEER FOR HIS APPROVAL PRIOR TO THE COMMENCEMENT OF THE PROJECT.

3.6 THE WALL FOOTING SHALL BE CAST IN 16 PANELS, ±10 966 mm LONG EACH.

3.7 WALLS SHALL BE CAST IN 16 VERTICAL PANELS, ±10 740 mm LONG EACH, AND IN 2 EQUAL VERTICAL LIFTS. CONSTRUCTION SHALL START WITH A CHOSEN PANEL. THEREAFTER WALL PANELS SHALL BE CONSTRUCTED CONSECUTIVELY BOTH CLOCKWISE AND ANTI-CLOCKWISE FROM THIS PANEL. WALL PANELS SHALL BE SUPPORTED LATERALLY UNTIL A SUFFICIENT LENGTH OF WALL HAS BEEN CONSTRUCTED TO RENDER THE WALL STABLE.

3.8 CONCRETE COVER TO REINFORCEMENT IS AS FOLLOWS (EXCEPT WHERE OTHERWISE NOTED ON BENDING SCHEDULES):

COLUMNS (ON SPII	40 mm
TOP OF ROOF	25 mm
ROOF RING BEA	25 mm
WALL FOOTING	50 mm
APRON (TOP)	25 mm
REST OF STRUCTI	40 mm

3.9 THE FOLLOWING TOLERANCES SHALL APPLY:
CONCRETE COVER -0 mm +5 mm
BAR SPACING -10 mm +10 mm

THE CONTRACTOR SHALL ENSURE THAT THE TOLERANCES ARE STRICTLY ADHERED TO, AND THAT SPACING OF STARTER BARS AND CONCRETE COVER ON STARTER BARS IS WITHIN THE SPECIFIED TOLERANCES BEFORE CONCRETE IS CAST.

3.10 BEAM DIMENSIONS ARE GIVEN AS A x B , WHERE:
A = WIDTH OF BEAM
B = DEPTH OF BEAM (SLAB INCLUDED)

3.11 FIBRE CEMENT COVER BLOCKS AND WATER PROOF DOWEL PLUGS OF SUITABLE STRENGTH MANUFACTURED BY A REPUTABLE COMPANY SHALL BE USED.

3.12 EARLY AGE PROTECTION OF CONCRETE TO PREVENT PLASTIC SHRINKAGE AND CURING SHALL BE DONE STRICTLY IN ACCORDANCE WITH THE PROJECT SPECIFICATION. THE CURING PERIOD SHALL NOT BE LESS THAN 10 DAYS. THE USE OF CURING COMPOUNDS ARE STRICTLY PROHIBITED AND ONLY CURING WILL BE ALLOWED.

3.13 A 20mm x 20mm CHAMFER SHALL BE PROVIDED ON ALL VISIBLE CORNERS OF OFF-SHUTTER CONCRETE.

3.14 CONSTRUCTION JOINTS SHALL BE TREATED IN ACCORDANCE WITH THE PROJECT SPECIFICATION, i.e. ROUGHENING TO EXPOSE COURSE AGGREGATE, AND THOROUGH WETTING BEFORE CASTING THE NEW ELEMENT.

3.14 CONSTRUCTION JOINTS SHALL BE TREATED IN ACCORDANCE WITH THE PROJECT SPECIFICATION, i.e. ROUGHENING TO EXPOSE COURSE AGGREGATE, AND THOROUGH WETTING BEFORE CASTING THE NEW ELEMENT.

3.15 WATER BARS AND WATER STOPS TO BE INSTALLED AS PER DETAILS.

4. REINFORCEMENT

4.1 ALL REINFORCEMENT SHALL COMPLY WITH THE REQUIREMENTS OF SANS 1200G.

4.2 THE CONTRACTOR SHALL GIVE AT LEAST 48 HOURS NOTICE TO THE ENGINEER FOR STEEL INSPECTIONS THAT ARE REQUIRED.

4.3 NO HEATING, FLAME CUTTING OR WELDING OF REINFORCEMENT SHALL BE ALLOWED WITHOUT THE WRITTEN APPROVAL OF THE ENGINEER.

4.4 SPLICE LENGTHS IN REINFORCEMENT SHALL BE 50 x DIAMETER OF THE SMALLER BAR AT SPLICE. WHERE APPLICABLE, SPLICES IN REINFORCEMENT SHOULD BE STAGGERED.

4.5 INSTALLATION OF DOWELS SHALL COMPLY WITH THE FOLLOWING:

DEPTH OF HOLE 15 x DIAMETER OF DOWEL
DIAMETER OF HOLE 1,3 - 1.4 x DIAMETER OF DOWEL
EPOXY VERTICAL UPSIDE PRO-STRUCT 617 OR SIKADUR 31
EPOXY VERTICAL INSTAL PRO-STRUCT 618 (OR 632 IF HOLE IS DAMP) OR SIKADUR 32
EPOXY HORIZONTAL INSTAI PRO-STRUCT 617 OR SIKADUR 31

5. STRUCTURAL STEELWORK

5.1 ALL STRUCTURAL STEELWORK SHALL BE FABRICATED AND ERECTED IN ACCORDANCE WITH SANS 1200HA.

5.2 ALL DIMENSIONS SHALL BE CHECKED ON SITE BEFORE PREPARATION OF SHOP DRAWINGS COMMENCES. ANY DISCREPANCIES SHALL BE BROUGHT TO THE ATTENTION OF THE ENGINEER. SHOP DRAWINGS FOR LADDERS OF THE RESERVOIR SHALL BE SUPPLIED FOR APPROVAL TO THE ENGINEER AT LEAST 1 MONTH PRIOR TO MANUFACTURING.

5.3 BUTT WELDS SHALL DEVELOP THE FULL STRENGTH OF THE ELEMENTS JOINED.

5.4 ALL WELDS SHALL BE 6 mm UNLESS OTHERWISE SHOWN.

5.5 WELDING ELECTRODES FOR STEELWORK TO BE HOT DIP GALVANIZED SHALL BE E70 XX UNLESS NOTED OTHERWISE.

5.6 WELDING OF STAINLESS STEEL SHALL BE DONE ACCORDING TO THE MMA PROCESS AND STAINLESS STEEL 316L WELDING RODS SHALL BE USED. WELDS SHALL BE PICKLED AND PASSIVATED ON COMPLETION.

5.7 STAINLESS STEEL 316 SHALL BE USED FOR LADDERS INSIDE RESERVOIR. GRADE 300 W STEEL WHICH SHALL BE HOT DIPPED GALVANIZED SHALL BE USED FOR MANHOLE FRAMES AND COVERS AND VENTILATORS.

5.8 ALL ANCHOR BOLTS SHALL BE STAINLESS STEEL.

5.9 THE CONTRACTOR SHALL, AT THE COMMENCEMENT OF THE PROJECT, ACQUAINT HIMSELF WITH THE AVAILABILITY AND DELIVERY TIME OF THE PRODUCTS AND STEEL PROFILES SPECIFIED ON THE DRAWINGS SO THAT SUCH MATERIAL CAN BE ORDERED WELL IN ADVANCE.

THE CONTRACTOR SHALL ADHERE TO THE FOLLOWING CODES DURING CONSTRUCTION AS AS APPLICABLE:
SANS 2001 CONSTRUCTION WORKS:
PART CC1: CONCRETE WORKS (STRUCTURAL)
PART CC2: CONCRETE WORKS (MINOR WORKS)
PART CG1: INSTALLATION OF GLAZING IN WINDOW AND DOOR FRAMES:
PART CM1: MASONRY WALLING
PART CS1: STRUCTURAL STEELWORK
PART CT1: STRUCTURAL TIMBERWORK (FLOORING)
PART CT2: STRUCTURAL TIMBERWORK (ROOFING)
PART EM1: CEMENT PLASTER
SANS 10155 ACCURACY IN BUILDINGS
GRADE II PERMISSIBLE DEVIATION / TOLERANCE SHALL APPLY UNLESS OTHERWISE NOTED.
ONE COPY OF EACH OF THESE CODES SHALL BE KEPT ON SITE AND SHALL BE MADE AVAILABLE TO THE ENGINEER ON REQUEST.

NOTE:
1. CONTRACTOR TO TAKE SITE DIMENSIONS PRIOR TO ANY MANUFACTURING BEING DONE.
2. ALL WELDS TO BASE PLATE 8mm CONTINUOUS FILLET WELDS
3. ALL WELDS TO BEAM END PLATE 6mm CONTINUOUS FILLET
4. ALL STRUCTURAL STEEL BELOW GL TO BE PAINTED USING PLASCON PLASCOTUFF EPOXY COAL TAR TO MANUFACTURERS SPECIFICATION

CONSTRUCTION NOTES

1. THIS SET OF DRAWINGS IS TO BE READ IN CONJUNCTION WITH ARCHITECTURAL, CIVIL, MECHANICAL AND ELECTRICAL DRAWINGS AS WELL AS PROJECT SPECIFICATIONS. ANY DISCREPANCIES ARE TO BE REPORTED TO THE ENGINEER IMMEDIATELY AND BEFORE CONSTRUCTION COMMENCE.
2. THE CONTRACTOR SHALL CHECK ALL DIMENSIONS AND LEVELS ON SITE. ANY DISCREPANCIES SHALL BE REPORTED TO THE ENGINEER IMMEDIATELY AND BEFORE PREPARATION OF SHOP DRAWINGS, ORDERING OF MATERIALS OR CONSTRUCTION COMMENCE.
3. SCALING FROM THESE DRAWINGS IS NOT PERMITTED. ONLY DIMENSIONS AND LEVELS INDICATED ON THE DRAWINGS MAY BE DEEMED CORRECT. IF ANY DIMENSION OR LEVEL SEEMS DOUBTFUL THE ENGINEER MUST BE CONSULTED.
4. DIMENSIONS ARE GIVEN IN MILLIMETRES (mm) AND LEVELS IN METRES (m) TO 3 DECIMAL PLACES.
5. ALL BASES AND COLUMNS ARE SYMMETRICAL ON GRIDLINES UNLESS OTHERWISE INDICATED.
6. ALL WORK AND MATERIALS SHALL COMPLY WITH THE MOST RECENT REVISIONS OF THE NATIONAL BUILDING REGULATIONS (NBR) AND RELEVANT SANS CODES OF PRACTISE AND STANDARD METHODS.
THE CONTRACTOR SHALL ADHERE TO THE FOLLOWING CODES DURING CONSTRUCTION AS APPLICABLE:
SANS 2001 CONSTRUCTION WORKS:
PART CC1: CONCRETE WORKS (STRUCTURAL)
PART CC2: CONCRETE WORKS (MINOR WORKS)
PART CG1: INSTALLATION OF GLAZING IN WINDOW AND DOOR FRAMES:
PART CM1: MASONRY WALLING
PART CM2: STRIP FOOTINGS, PAD FOOTINGS AND SLAB-ON-THE-GROUND FOUNDATIONS FOR MASONRY WALLING
PART CS1: STRUCTURAL STEELWORK
PART CT1: STRUCTURAL TIMBERWORK (FLOORING)
PART CT2: STRUCTURAL TIMBERWORK (ROOFING)
PART EM1: CEMENT PLASTER
SANS 10155 ACCURACY IN BUILDINGS
GRADE II PERMISSIBLE DEVIATION / TOLERANCE SHALL APPLY UNLESS OTHERWISE NOTED.
ONE COPY OF EACH OF THESE CODES SHALL BE KEPT ON SITE AND SHALL BE MADE AVAILABLE TO THE ENGINEER ON REQUEST.
7. LATEST REVISIONS OF ALL DRAWINGS, BENDING SCHEDULES AND RELEVANT REGULATIONS; SPECIFICATIONS AND CODES SHALL BE AVAILABLE ON SITE AT ALL TIMES.
8. THE CONTRACTOR SHALL AT THE COMMENCEMENT OF THE PROJECT ACQUAINT HIMSELF WITH THE AVAILABILITY AND DELIVERY TIME OF ALL MATERIALS AND PRODUCTS SPECIFIED TO ENSURE THAT SUCH MATERIALS AND PRODUCTS ARE ORDERED WELL IN ADVANCE.
9. AN INSTRUCTION BOOK SHALL BE KEPT ON SITE FOR USE BY THE ENGINEER TO RECORD ALL INSPECTIONS AND INSTRUCTIONS. ALL INSTRUCTIONS SHALL BE RECORDED, SIGNED BY THE CONTRACTOR AND A COPY THEREOF SENT TO THE ENGINEERS OFFICE.
10. ALL PROPRIETARY MATERIAL AND PRODUCTS ARE TO BE APPROVED BY THE ENGINEER IN WRITING BEFORE ORDERING AND INSTALLATION THEREOF.
11. ALL PROPRIETARY MATERIAL AND PRODUCTS SHALL BE INSTALLED STRICTLY TO THE MANUFACTURER'S SPECIFICATION.
12. ALL UNDERGROUND PIPED SERVICES OR SLEEVES MUST BE LAID BEFORE CONSTRUCTION OF BASES AND BEFORE CONSTRUCTION OF SURFACE BEDS AND GROUND SLABS COMMENCE.
13. CARE SHALL BE TAKEN NOT TO DAMAGE WATERPROOFING MEMBRANES, FILTERS OR OTHER MATERIAL DURING ANY STAGE OF CONSTRUCTION. SHOULD DAMAGE OCCUR THE CONTRACTOR SHALL MAKE GOOD AT HIS OWN COST.
14. CEMENT SHALL NOT BE STORED FOR PERIODS LONGER THAN 6 WEEKS WITHOUT WRITTEN APPROVAL OF THE ENGINEER.

FOUNDATION PREPARATION UNDER ALL FOUNDATIONS; SURFACE BEDS AND RC SLABS ON GROUND:

1. SITE CLEARANCE AND PREPARATION BEFORE CONSTRUCTION COMMENCE:
   a. REMOVE TO SPOIL ALL REMNANTS OF EXISTING STRUCTURES, RUBBLE, DUMPED MATERIAL AND TAR SURFACING.
   b. FELL TREES AND REMOVE THEIR STUMPS AND MAJOR ROOTS TO SPOIL.
   c. REMOVE THE ROOT-RICH TOP 100mm OF THE GROUND TO SPOIL.
   d. RIP THE UPPER 200mm TO EXPOSE EXTRANEOUS MATERIAL.
   e. REMOVE THE EXTRANEOUS MATERIAL (BRICKS, WOOD, ETC.).

2. EXCAVATIONS:
   a. THE SOILS ARE COHESIONLESS AND STEEPLY EXCAVATED CUT OR STEEP FILL (EMBANKMENT) SLOPES SHALL BE AVOIDED.
   b. FOR TEMPORARY EXCAVATIONS AND SERVICE TRENCHES THE FOLLOWING SLOPE BATTERS SHALL BE ADHERED TO

DEPTH	BATTER
i 0-1m	VERTICAL
ii 1m - 1.5m	1:0.75
iii.1.5m - 2.5m	1:1

   c. THESE BATTERS SHALL BE CHECKED BY A COMPETENT PERSON AS SOON AS THE INITIAL EXCAVATIONS ARE MADE, AND ROUTINELY THEREAFTER TO ENSURE SAFE CONDITIONS ARE MAINTAINED.
   d. NO PERSON SHALL ENTER AN EXCAVATION IF GROUNDWATER OR STANDING WATER OCCURS IN IT PENDING A MODIFICATION TO THE SLOPE BATTER AND/OR OTHER SLOPE STABILISATION MEASURES.

3. RE-USE OF SCALPED IN-SITU SOIL:
   IN-SITU MATERIAL CAN ONLY BE USED IF:
   a. RUN THE SOIL THROUGH A GRIZZLY TO REMOVE EXTRANEOUS MATERIAL INCLUDING ROOTS (TO SPOIL)
   b. TEST THE REMAINING SOIL FOR G7 OR G8 SUITABILITY IN RE-USE AS ENGINEERED FILL; BACKFILLING BELOW SURFACE BEDS AND SLABS; GENERAL FILL ABOVE COLUMN BASES AND NEXT TO STRIP FOOTINGS

4. FOUNDATIONS PAD AND STRIP FOOTINGS:
   a. EXCAVATE TO A DEPTH OF 1.0m BELOW THE CURRENT GROUND LEVEL OR TO IN-SITU SOIL BELOW FILL MATERIAL / MAN-MADE SOILS
   b. MINIMUM ALLOWABLE BEARING PRESSURE = 150 kPa
   c. STRIP FOOTINGS SHALL BE REINFORCED
   d. MINIMUM PAD FOOTING SIZE SHALL BE 1.2m X 1.2m UNLESS BIGGER FOOTINGS ARE SPECIFIED
   e. MINIMUM STRIPFOOTING WIDTH SHALL BE 750mm UNLESS WIDER STRIPFOOTINGS ARE SPECIFIED

5. SURFACE BEDS AND RC SLABS-ON-GROUND
   a. APPROVED CLEAN SANDY MATERIAL (G7 OR G8) SHALL BE PLACED IN 150mm THICK LAYERS, MOISTENED WITHIN 2% OF OPTIMUM MOISTURE CONTENT AND COMPACTED TO AT LEAST 98% OF MOD DENSITY BETWEEN INSITU MATERIAL AND UNDERSIDE OF SUBBASE
   b. G5 QUALITY IMPORTED MATERIAL (PREFERABLY CRUSHED, WEATHERED MALMESBURY AGGREGATE) SHALL BE USED FOR THE SUB BASE LAYER
   c. DENSITY SHALL BE TESTED BY UNDERTAKING NUCLEAR DENSIMETER TESTS PER LAYER AND AT A RATE OF ONE TEST PER EVERY 75m² SOIL PLACED.

6. BACKFILLING:
   a. REMOVE WATER FROM EXCAVATIONS IF PRESENT AND LAY A PIONEER LAYER OF CLEAN RUBBLY MATERIAL OR AGGREGATE TO ENABLE FILLING TO COMMENCE ON A FIRM SURFACE.
   b. EXCAVATIONS (INCLUDING TRIAL PITS) MUST BE FILLED WITH APPROVED CLEAN SAND IN 100mm THICK LAYERS, MOISTENED AND COMPACTED TO AT LEAST 98% OF MOD AASHTO MAXIMUM DRY DENSITY.
   c. DENSITY SHALL BE TESTED BY UNDERTAKING DPC TESTS TO A 1.5m DEPTH ON A 10mx10m GRID ACROSS THE FOOTPRINT OF THE BUILDING AFTER SUBGRADE COMPACTION HAS BEEN COMPLETED.
   d. THE MAXIMUM DCP PENETRATION RATE SHOULD BE 20mm PER BLOW.

7. GENERAL:
   a. ALL EXCAVATIONS MUST BE INSPECTED AND APPROVED BY THE GEOTECHNICAL ENGINEER OR ENGINEER BEFORE PLACING OF ANY CONCRETE FOUNDATION, BLINDING, WATERPROOFING OR GEOFABRIC MEMBRANE.
   b. LEVELS OF BASES AS SHOWN ARE PRELIMINARY AND HAVE TO BE CONFIRMED BY THE GEOTECHNICAL ENGINEER OR ENGINEER ON SITE TO OBTAIN THE SPECIFIED BEARING PRESSURE. WHERE EXCAVATION LEVELS HAVE TO BE LOWERED, THE TOP LEVEL OF THE BASE SHOULD BE KEPT AS SHOWN AND THE BLINDING LAYER THICKENED. SIZE AND REINFORCING MAY BE ALTERED BY THE ENGINEER IF REQUIRED.
   c. NO FOUNDATION SHALL BE CAST ON EITHER NON-ENGINEERED FILL OR BACKFILL MATERIAL. PORTIONS THAT ARE OVER-EXCAVATED BEYOND THE DEPTH REQUIRED BY THE GEOTECHNICAL ENGINEER, TO BE FILLED WITH MASS CONCRETE (15MPa /28mm) AT CONTRACTOR'S EXPENSE.
   d. A 50mm THICK BLINDING LAYER OF 15 MPa/19mm SHALL BE CAST UNDER ALL REINFORCED FOUNDATIONS.
   e. ALL FOUNDATIONS ARE PLACED SYMMETRICALLY BELOW COLUMNS AND BRICKWORK U.N.O.
   f. NO BACKFILLING BEHIND RETAINING WALLS IS TO BE DONE BEFORE THE ENGINEER GIVES WRITTEN APPROVAL. WHERE APPLICABLE, BACKFILLING SHALL BE DONE SIMULTANEOUSLY ON BOTH SIDES OF WALLS TO MINIMIZE THE RELATIVE HEIGHT DIFFERENCE IN SOIL LEVELS.
   g. MANUAL COMPACTION OF SOIL IS TO TAKE PLACE WITHIN 500mm OF WALLS.

CONCRETE INFORMATION:

1. CONCRETE STRENGTH AT 28 DAYS SHALL BE:

BLINDING -	15 MPa / 19mm
MASS -	15 MPa / 38mm
FOUNDATIONS -	35 MPa / 26mm
GROUNDBEAMS -	35 MPa / 19mm
COLUMNS -	35 MPa / 19mm
WALLS -	35 MPa / 19mm
CAVITY WALL INFILL-	15 MPa / 13mm
BEAMS-	35 MPa / 19mm
SLABS (SUSPENDED)-	35 MPa / 19mm
SURFACE BEDS -	35 MPa / 19mm
STAIRS "	30 MPa / 19mm

2. NO CONCRETE SHALL BE POURED UNTIL THE EXCAVATION, BLINDING FORMWORK AND/OR REINFORCEMENT ETC. HAS BEEN INSPECTED AND APPROVED IN WRITING BY THE ENGINEER. ENGINEER TO BE GIVEN A MINIMUM OF 48-HOURS NOTICE OF SUCH AN INSPECTION.
3. THE CONTRACTOR MUST CO-ORDINATE ALL SERVICES DRAWINGS FOR DETAILS AND POSITIONS OF OPENINGS AND SLEEVES REQUIRED FOR STORMWATER, SEWERAGE, DRAINAGE, ELECTRICAL, MECHANICAL AND OTHER SERVICES. DISCREPANCIES TO BE BROUGHT TO THE ATTENTION OF ENGINEER AND OTHER RELEVANT PARTIES.
4. THE CONTRACTOR MUST OBTAIN PERMISION FROM THE ENGINEER BEFORE ANY OPENINGS OR SERVICES, WHICH ARE NOT INDICATED ON THE DRAWINGS, MAY BE INTRODUCED THROUGH ANY STRUCTURAL ELEMENT OR CLOSE TO ANY COLUMN.
5. CURING OF CONCRETE SHALL BE CARRIED OUT STRICTLY IN ACCORDANCE WITH SANS 2001-CC1. THE CONTRACTOR TO PROVIDE A METHOD STATEMENT, TO BE APPROVED BY ENGINEER, FOR THE CURING PROCEDURES OF THE VARIOUS ELEMENTS CONCERNED BUT ALL SURFACES TO BE KEPT CONTINUOUSLY DAMP FOR AT LEAST 7 DAYS AFTER CASTING. CONCRETE SLABS TO BE COVERED WITH MOIST SAND OR COVERED WITH PLASTIC DURING THIS PERIOD. CONCRETE COLUMNS TO BE WRAPPED IN A PLASTIC MEMBRANE DURING THIS PERIOD.
6. STRIPPING TIMES OF SHUTTERING AND PROPPING SHALL BE IN ACCORDANCE WITH SANS 2001-CC1: SECTION 4.3.8 AND TABLE 2 AS REPRODUCED IN THE STRUCTURAL NOTES AND SPECIFICATIONS.
7. PROPPING MAY ONLY BE REMOVED ONCE SUSPENDED SLABS OR BEAMS HAVE OBTAINED THEIR 28 DAY STRENGTH, U.N.O. ALL SUSPENDED SLABS AND BEAMS TO BE BACK-PROPPED FOR TWO (2) COMPLETED LEVELS BELOW THE PROPPED LEVEL OF THE RELEVANT BEAM OR SLAB.
8. DOWNSTAND AND UPSTAND BEAM DIMENSIONS ARE GIVEN AS
   A x B WHERE
   B = TOTAL DEPTH OF BEAM INCLUDING SLAB THICKNESS
   A = WIDTH OF BEAM
9. CONCRETE POURED IN EXCESS OF THREE METERS HIGH WILL NOT BE ACCEPTED WITHOUT PRIOR WRITTEN APPROVAL OF THE ENGINEER.
10. ALL COLUMNS ARE PLACED SYMMETRICALLY ON GRID LINES U.N.O.
11. 20x20mm CHAMFERS TO ALL VISIBLE EDGES U.N.O.
12. 200mm TBC KICKERS FOR COLUMNS AND WALLS HAVE BEEN ALLOWED FOR IN THE REINFORCING LENGTHS. THEY SHALL BE CAST WITH THE SAME STRENGTH AS THE CONCRETE ELEMENTS BELOW THEM AND THOROUGHLY COMPACTED AND CURED.

SURFACE BED NOTES:

1. DAMPPROOFING MEMBRANE TO BE INSTALLED UNDER SURFACE BEDS ACCORDING TO SANS 952.
2. FINISHES: WOOD FLOATED OR POWERFLOATED FINISH
3. ABBREVIATIONS:
   • IJ - ISOLATION JOINT
   • SCJ - SAW CUT JOINT
   • EJ - EXPANSION JOINT
   • KCJ - KEYED CONSTRUCTION JOINT
4. PROVIDE 10mm IJ AROUND ALL CONCRETE COLUMNS, STEEL COLUMNS AND AGAINST BRICK AND CONCRETE WALLS. AFTER CONCRETE HAS SET, JOINTEX TO BE RAKED OUT 10mm DEEP AND SEALED WITH APPROVED JOINT SEALANT.
5. REFER TO DETAILS FOR IJ, SJ, EJ AND CJ.
6. METHOD STATEMENT FOR POURING OF SURFACE BED PANELS TO BE APPROVED BY THE ENGINEER.
7. SAW-CUT JOINTS SHALL BE DONE AS SOON AS CONCRETE IS FIRM ENOUGH NOT TO DAMAGE THE EDGES, USUALLY BETWEEN 6-16 HOURS, BUT NOT LATER THAN 48 HOURS. JOINTS TO BE REPEATED IN FINISHED SURFACES.
8. JOINTS TO OVERLAP 200mm AND EFFECTIVELY SEALED OR TAPED.
9. PENETRATION BY PIPES, PLUMBING FITTINGS ETC. AND PUNCTURES SHALL BE TAPED WITH A PRESSURE SENSITIVE ADHESIVE TAPE.
10. ALL CAST IN ELEMENTS TO BE STAINLESS STEEL PIPES.

BRICKWORK & BLOCKWORK NOTES:

1. ALL BRICKWORK / BLOCKWORK SHOWN ON ENGINEER'S DRAWINGS ARE SHOWN FOR CLARITY PURPOSES U.N.O.
2. ALL LOADBEARING, HOLLOW BLOCK WORK TO BE FILLED WITH GRADE 15 MPa/13mm MASS CONCRETE.
3. REFER TO THE ARCHITECT'S DRAWINGS FOR GENERAL LAYOUT OF BRICKWORK OR BLOCKWORK AND CONTROL JOINTS IN BRICKWORK OR BLOCKWORK.
4. THE MINIMUM CRUSHING STRENGTH OF ALL LOADBEARING BRICKWORK SHALL BE 14MPa U.N.O. AND LOADBEARING BLOCKWORK 7MPa U.N.O.
5. THE MINIMUM CRUSHING STRENGTH OF MORTAR SHALL BE AS FOR CLASS II MORTAR IN ACCORDANCE WITH TABLE 1 SABS 0164 UNLESS INDICATED OTHERWISE ON DRAWINGS.
6. BRICKFORCE:
   • ALL BRICK FORCE SHALL BE GALVANISED.
   • LOAD BEARING BRICKWORK SHALL BE REINFORCED WITH AN APPROVED BRICKFORCE EVERY SECOND LAYER AND NON-LOADBEARING BRICKWORK EVERY FOURTH LAYER U.N.O
   • LOAD BEARING BLOCKWORK SHALL BE REINFORCED WITH APPROVED BRICKFORCE EVERY LAYER AND NON-LOADBEARING BLOCK WORK EVERY SECOND LAYER U.N.O.
   • IN ADDITION, CONTINUOUS BRICKFORCE IS REQUIRED IN EVERY LAYER FOR THE FIRST FOUR LAYERS ABOVE AND BELOW THE TOP OF FOUNDATIONS & SLABS, OVER WINDOWS AND DOOR OPENINGS, EXTENDING AT LEAST 1m BEYOND BOTH SIDES OF THE OPENING. MINIMUM LAPS TO BE 300mm. OUTSIDE WIRE OF BRICKFORCE TO BE CONTINUOUS AT CORNERS.
7. NON-LOAD BEARING BRICKWORK/BLOCKWORK MAY NOT BE BUILT CLOSER THAN 10mm FROM THE SOFFITS AND SIDES OF BEAMS AND SLABS U.N.O AND ONLY AFTER ALL PROPS HAVE BEEN REMOVED. REFER TO STANDARD DETAILS.
8. WHERE BRICKWORK/BLOCKWORK AND CONCRETE JOIN, V-JOINTS ARE TO BE MADE THROUGH THE TOTAL THICKNESS OF THE PLASTERWORK.
9. LOADBEARING BRICKWORK OVER SLABS IS TO BE COMPLETED BEFORE THE NON-LOADBEARING BRICKWORK UNDER SLABS.
10. PLACE 2 LAYERS OF 3-PLY MALTHOID BETWEEN SLAB SOFFITS AND LOAD BEARING BRICKWORK OR BLOCKWORK.
11. ALL BRICKWORK SHALL BE FIXED TO CONCRETE & STEEL COLUMNS BY MEANS OF HOOP IRON EVERY FOURTH COURSE AND BLOCKWORK EVERY SECOND COURSE.
12. IN CAVITY WALLS, WALL TIES SHALL JOIN THE LEAVES AND SHALL BE EMBEDDED IN MASONRY JOINTS AT RIGHT ANGLES TO THE LEAVES AS THE WORK PROGRESSES.
13. THE NUMBER OF WALL TIES PER m² OF WALLING SHALL BE:
   • 75mm > CAVITY > 3.7 TIES/m²
   • 75mm < CAVITY < 100mm - 4.5 TIES/m²
   • 100mm < CAVITY < 150mm - 5.0 TIES/m²
14. ENSURE THAT EACH TIE IS EMBEDDED TO A DEPTH OF AT LEAST 50mm IN THE MORTAR JOINT OF EACH LEAF.
15. CLAY BRICKS TO BE WETTED BEFORE BEING USED BUT CONCRETE BRICKS AND BLOCKS TO BE KEPT DRY BEFORE BEING USED.
16. ALL CHASES SHALL BE VERTICAL AND SHALL NOT BE GREATER THAN 25mm DEEP BY 40mm WIDE. A MAXIMUM OF 750mm LONG HORIZONTAL CHASE WILL BE ACCEPTED. NO DIAGONAL CHASES WILL BE ACCEPTED.

CAVITY FILLED WALL CONSTRUCTION METHODOLOGY:

1. WALLS TO BE CONSTRUCTED IN 600mm HIGH INTERVALS.
2. PRIOR TO CASTING, THE WALL CAVITY TO BE CLEANED OUT FROM ALL UNWANTED MATERIALS.
3. CONCRETE TO BE CAST INTO CAVITY PRIOR TO CONSTRUCTION OF NEXT 600mm.
4. CARE TO BE TAKEN TO ENSURE THAT BRICK SKINS ARE TIED TOGETHER SUFFICIENTLY WITH APPROVED BRICKFORCE AT MAX 340c/c.
5. NO PERFORATED BRICKS SHALL BE USED FOR RETAINING WALLS OR BELOW GROUND LEVEL

FOR TENDER

NOTES / LEGEND	APPROVED BY COUNCIL / CLIENT	DATE	INITIAL	No./CODE	REVISION DESCRIPTION	CLIENT
	CITY ENGINEER / CLIENT — REG. NO. — DATE	20/07/2024	R.G.B	T0	ISSUED FOR TENDER	STELLENBOSCH MUNICIPALITY

AMENDMENTS CODE
A,B,C.../ BEFORE TENDER — T0 / : TENDER DRAWING — 0,1,2.../ : AFTER TENDER — Z / : AS BUILT
/A : BY CLIENT — /B : BY ARCHITECT — /C : BY MECHANICAL OR ELECTRICAL — /D : BY BVI — /E : BY OTHER ( )

COPYRIGHT VESTS IN THIS DOCUMENT AND NO USE OR REPRODUCTION OR DUPLICATION THEREOF MAY OCCUR WITHOUT THE WRITTEN CONSENT OF BVI CONSULTING ENGINEERS

bvi 50 YEARS CELEBRATION EST 1967-2017
• ENGINEERING • PROCUREMENT • MANAGEMENT
Registration no. 1988/005107/07

PROVINCE	OFFICE	☎	E-MAIL
Gauteng	Tshwane	(012) 940-1111	pta@bvi.co.za
	Polokwane	(015) 291-0400	plk@b

Thursday, 11 July 2024 15:22:56

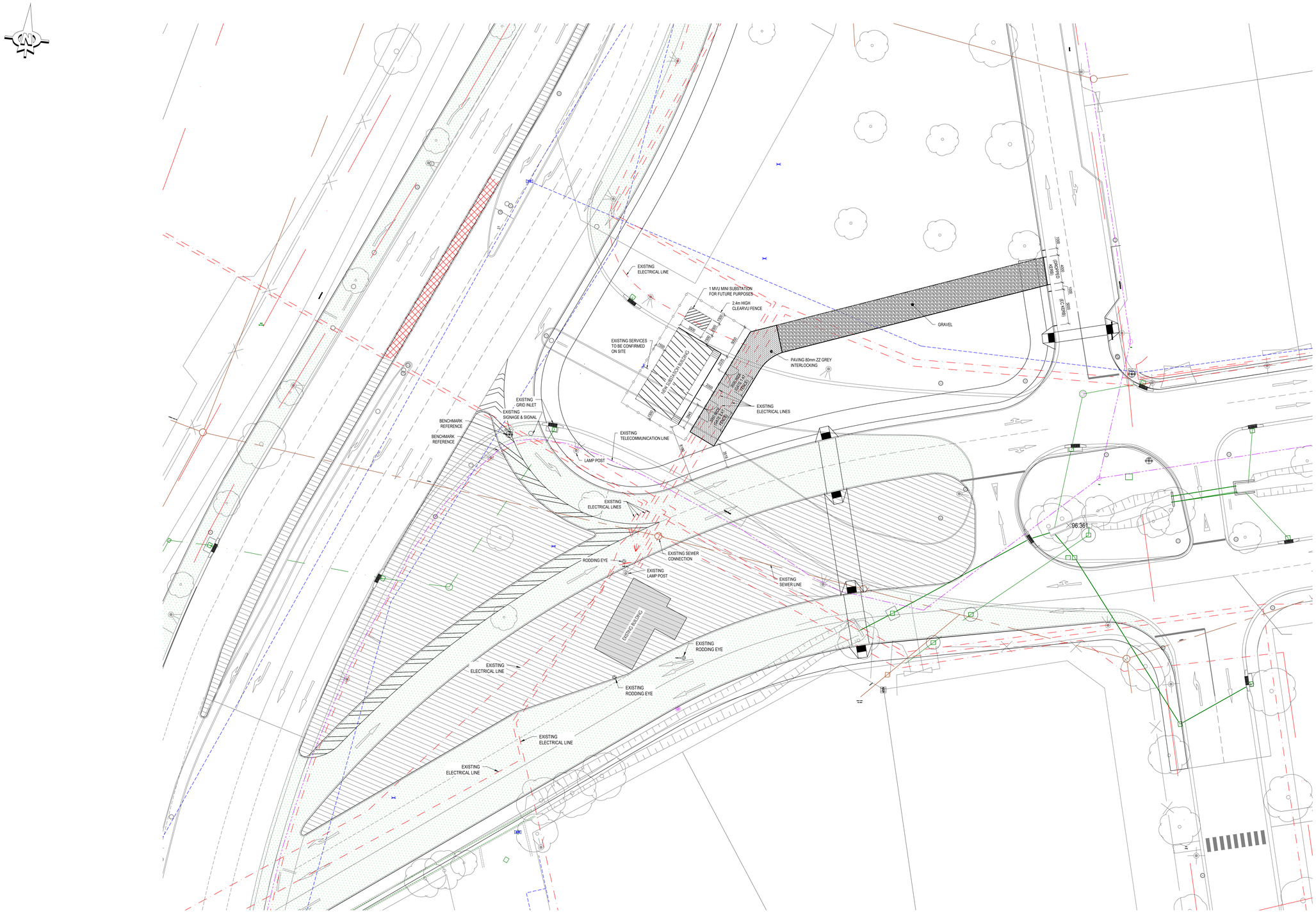

SITE PLAN
SCALE 1:200

FOR TENDER

NOTES / LEGEND

APPROVED BY COUNCIL / CLIENT

CITY ENGINEER / CLIENT | REG. NO. | DATE

AMENDMENTS CODE

A,B,C,.. / : BEFORE TENDER
T0 / : TENDER DRAWING
0,1,2,... / : AFTER TENDER
Z / : AS BUILT

A : BY CLIENT
B : BY ARCHITECT
C : BY MECHANICAL OR ELECTRICAL
D : BY BVI
E : BY OTHER ( )

DATE	INITIAL	No./CODE	REVISION DESCRIPTION
20/07/2024	R.G.B	T0	ISSUED FOR TENDER

COPYRIGHT VESTS IN THIS DOCUMENT AND NO USE OR REPRODUCTION OR DUPLICATION THEREOF MAY OCCUR WITHOUT THE WRITTEN CONSENT OF BVI CONSULTING ENGINEERS

CLIENT

STELLENBOSCH MUNICIPALITY
STELLENBOSCH - PNIEL - FRANSCHHOEK

bvi 50 YEAR CELEBRATION EST 1967-2017
• ENGINEERING • PROCUREMENT • MANAGEMENT
CESA
Registration no. 1986/001017/07

PROVINCE	OFFICE		E-MAIL
Gauteng	Tshwane	(012) 345-1111	pta@bvi.co.za
	Polokwane	(015) 291-5400	plk@bvi.co.za
Free State	Bloemfontein	(051) 447-2127	bfn@bvi.co.za
	Welkom	(057) 353-3468	wel@bvi.co.za
Northern Cape	Upington	(054) 337-6800	upt@bvi.co.za
	Springbok	(027) 712-8880	spk@bvi.co.za
KwaZulu Natal	Durban	(031) 266-6382	dbn@bvi.co.za
	Empangeni	(035) 772-6112	emp@bvi.co.za
Eastern Cape	Port Elizabeth	(041) 373-4243	pte@bvi.co.za
	East London	(043) 726-1444	ecl@bvi.co.za
Western Cape	Cape Town	(021) 527-7000	cpt@bvi.co.za

Visit or contact us online at www.bvigroup.co.za

PROJECT

ELECTRICAL SUBSTATION AT ALEXANDER STREET, STELLENBOSCH

DRAWING TITLE

SITE LAYOUT

APPROVED BY BVI

ENGINEER/TECHNOLOGIST	970672 REG. NO.	20/07/2024 DATE	
SCALE	AS SHOWN	DRAWN	R.BOTHA
DESIGNED	F.GREEF	CHECKED	L.PIENAAR
PLAN NUMBER		REVISION NO.	DATE SAVED
34092.00-201-01		T0	24 January 2024

0 10 50 100

O:\PROJECTS DRAWINGS\34000 - 34999\34092.00\STRUCTURAL\TENDER DRAWINGS\34092.00-201-01_REV T0.DWG

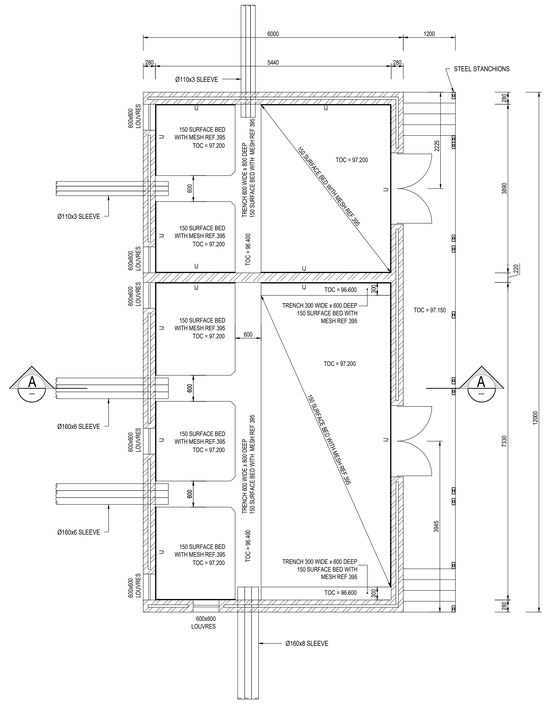

GROUND FLOOR LAYOUT
SCALE 1:50

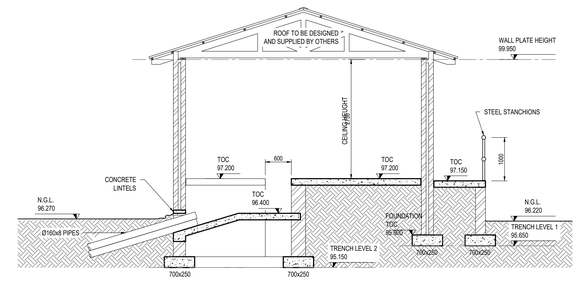

SECTION A
SCALE 1:50

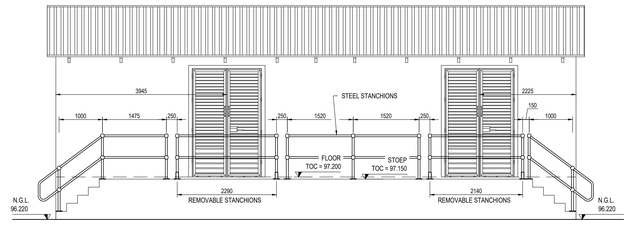

FRONT ELEVATION
SCALE 1:50

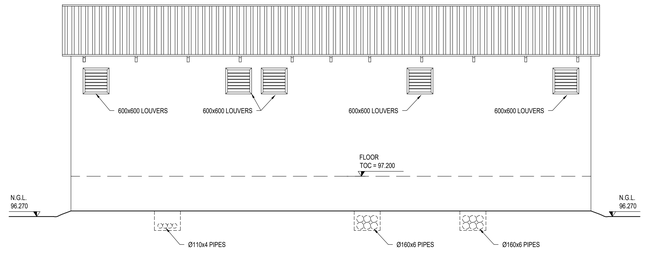

REAR ELEVATION
SCALE 1:50

FOR TENDER

NOTES / LEGEND

APPROVED BY COUNCIL / CLIENT

CITY ENGINEER / CLIENT | REG. NO. | DATE

AMENDMENTS CODE

A.B.C. / : BEFORE TENDER
T0 / : TENDER DRAWING
0.1.2. / : AFTER TENDER
Z / : AS BUILT

/A : BY CLIENT
/B : BY ARCHITECT
/C : BY MECHANICAL OR ELECTRICAL
/D : BY BVI
/E : BY OTHER ( )

DATE	INITIAL	No./CODE	REVISION DESCRIPTION
20/07/2024	R.G.B	T0	ISSUED FOR TENDER

COPYRIGHT VESTS IN THIS DOCUMENT AND NO USE OR REPRODUCTION OR DUPLICATION THEREOF MAY OCCUR WITHOUT THE WRITTEN CONSENT OF BVI CONSULTING ENGINEERS

CLIENT

STELLENBOSCH MUNICIPALITY
STELLENBOSCH - PNEL - FRANSCHHOEK

bvi 50 YEAR CELEBRATION EST 1967-2017
• ENGINEERING • PROCUREMENT • MANAGEMENT
CESA
Registration no. 1986/001/07/07

PROVINCE	OFFICE		EMAIL
Gauteng	Tshwane	(012) 940-1111	pta@bvi.co.za
	Pietersburg	(015) 291-5400	ptk@bvi.co.za
Free State	Bloemfontein	(051) 447-2127	bfn@bvi.co.za
	Welkom	(057) 353-3468	wel@bvi.co.za
Northern Cape	Upington	(054) 337-6600	up@bvi.co.za
	Springbok	(027) 712-8890	spg@bvi.co.za
KwaZulu Natal	Durban	(031) 266-6282	dbn@bvi.co.za
	Empangeni	(035) 772-6112	emp@bvi.co.za
Eastern Cape	Port Elizabeth	(041) 373-4243	pte@bvi.co.za
	East London	(043) 726-1444	ptl@bvi.co.za
Western Cape	Cape Town	(021) 527-7000	cpt@bvi.co.za

Visit or contact us online at www.bvigroup.co.za

PROJECT

ELECTRICAL SWITCHING & SUBSTATION BUILDING ALEXANDER STR. STELLENBOSCH

DRAWING TITLE

SUB STATION LAYOUT, SECTIONS AND DETAILS

APPROVED BY BVI

ENGINEER/TECHNOLOGIST	REG. NO.	DATE
	970672	20/07/2024

SCALE	AS SHOWN	DRAWN	R.BOTHA
DESIGNED	J.DE LANGE	CHECKED	L.PIENAAR

PLAN NUMBER	REVISION NO.	DATE SAVED
34092.00-201-02	T0	24 January 2024

O:\PROJECTS DRAWINGS\34000 - 34999\34092.00\STRUCTURAL\TENDER DRAWINGS\34092.00-201-02_REV T0.DWG

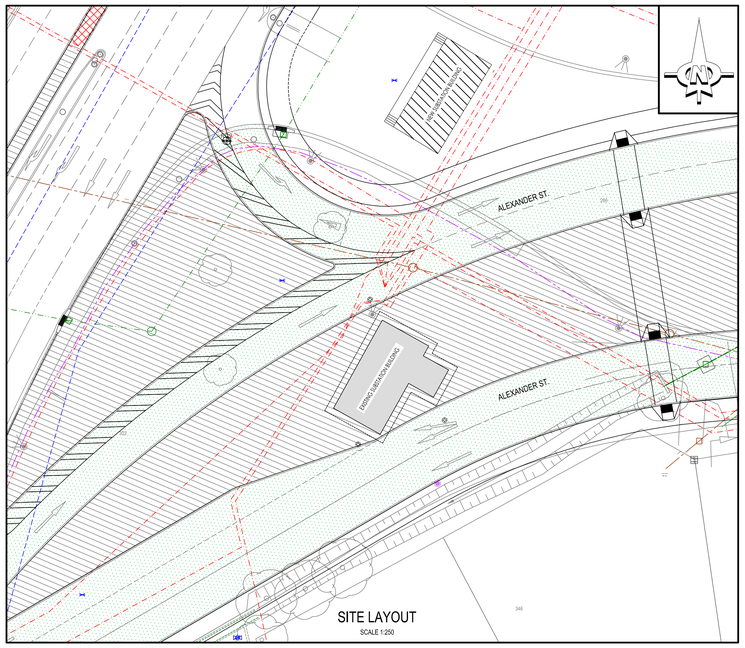

SITE LAYOUT
SCALE 1:250

NOTES:

1. GENERAL
1.1 THE RELEVANT STANDARD SPECIFICATIONS OF SABS 1200 ARE APPLICABLE.
1.2 NGL = NATURAL GROUND LEVEL
FGL = FINAL GROUND LEVEL
IL = INVERT LEVEL
TOC = TOP OF CONCRETE
NTS = NOT TO SCALE
1.3 230mm x 230mm PLASTERED BRICKWORK SUPPORTS REQUIRED UNDERNEATH ALL VALVES.
1.4 ALL WORKS TO BE CARRIED OUT IN ACCORDING TO SANS 1200 & THE PROJECT SPECIFICATIONS.
1.5 LEVELS & PIPEWORK DETAILS TO BE CONFIRMED ON SITE. ALL DIMENSIONS SHOWN ON THE DRAWING SHALL BE VERIFIED BY THE CONTRACTOR IN ORDER TO ENSURE THAT ON-SITE REQUIREMENTS ARE MET AND DISCREPANCIES MUST BE REPORTED TO THE ENGINEER PRIOR TO THE ORDERING OF ANY MATERIAL.

2. EARTHWORKS
2.1 ALL EXCAVATED AND FILL SURFACES ON WHICH CONCRETE ARE TO BE PLACED MUST BE COMPACTED TO 98% OF STANDARD PROCTOR DENSITY TO A MINIMUM DEPTH OF 300mm.
2.2 ALL EXCAVATIONS TO BE INSPECTED BY THE ENGINEER PRIOR TO CONSTRUCTION.
2.3 ALL EXCAVATION SIDES TO BE SHORED OR SLOPED UNLESS OTHERWISE INSTRUCTED BY THE ENGINEER.

3. CONCRETE (STRUCTURES)
3.1 ALL CONCRETE WORK SHALL BE DONE IN ACCORDANCE WITH SABS 1200G.
3.2 CONCRETE GRADE:
BLINDING LAYER = 15MPa/20mm
MASS CONCRETE = 25MPa/20mm
STRUCTURAL CONCRETE = 30MPa/20mm
3.3 MINIMUM COVER TO REINFORCING = 60mm
3.4 SPACER BLOCKS MUST BE MANUFACTURED FROM CONCRETE WITH A STRENGTH AT LEAST EQUAL TO THE CONCRETE IN WHICH THEY WILL BE USED.
3.5 ALL REINFORCING MUST BE INSPECTED BY THE ENGINEER PRIOR TO CASTING. THE ENGINEER MUST BE INFORMED OF A CAST AT LEAST 48 HOURS IN ADVANCE.
3.6 BLINDING LAYER TO BE PLACED UNDER ALL REINFORCED CONCRETE.
3.7 APPROVED STEP IRONS TO BE CAST INTO CHAMBER SIDES AT 300mm CENTRES AND STAGGERED LEFT AND RIGHT.
3.8 GRANOLITHIC SCREED ON FLOOR WITH THICKNESS VARYING FROM 150mm - 100mm. 50mm FALL IN DIRECTION OF SUMP.
400x400x150mm DEEP SUMP TO BE PROVIDED IN SCREED.
4. CONCRETE (LIDS)
4.1 CONCRETE CUBE STRENGTH: MIN. AT 28 DAYS.
CHAMBER COVERS SLABS 30MPa/20mm
4.2 CONCRETE COVER TO REINFORCING
CHAMBER COVER SLABS 30mm (MIN.)
4.3 ALL REINFORCING FIXED WITH THE SPECIFIED COVER MUST BE INSPECTED BY THE ENGINEER PRIOR TO ANY CONCRETE BEING CAST.
4.4 THE STANDARD SPECIFICATIONS SABS 1200 (EXCLUDING PAYMENT CLAUSES) IS APPLICABLE.
4.5 ALL CONCRETE TO BE PROPERLY CURED BY KEEPING SURFACES CONTINUOUSLY DAMP FOR AT LEAST 7 DAYS AFTER CASTING. CONCRETE SLABS TO BE COVERED WITH MOIST SAND DURING THIS PERIOD.
4.6 PLACE 2 LAYERS OF MALTHOID BETWEEN SLAB SOFFITS AND PRECAST CONCRETE SLAB.
4.7 EXTERNAL WALLS TO BE COATED WITH 2 COATS FLINTKOTE (ABE) AND 1 FINAL COAT. SILVAKOTE (ABE) AND INTERNAL WALLS TO BE COATED WITH 3 COATS DURASLURRY (ABE)
4.8 ALL BOLTS TO BE STAINLESS STEEL 304L U.O.S. ALL NUTS & WASHERS TO BE STAINLESS STEEL 316L U.O.S.
4.9 WRAP ALL FLANGES WITH DENSO TAPE(AFTER ENGINEERS FINAL INSPECTION & SIGN-OFF. STAINLESS STEEL 316L U.O.S.

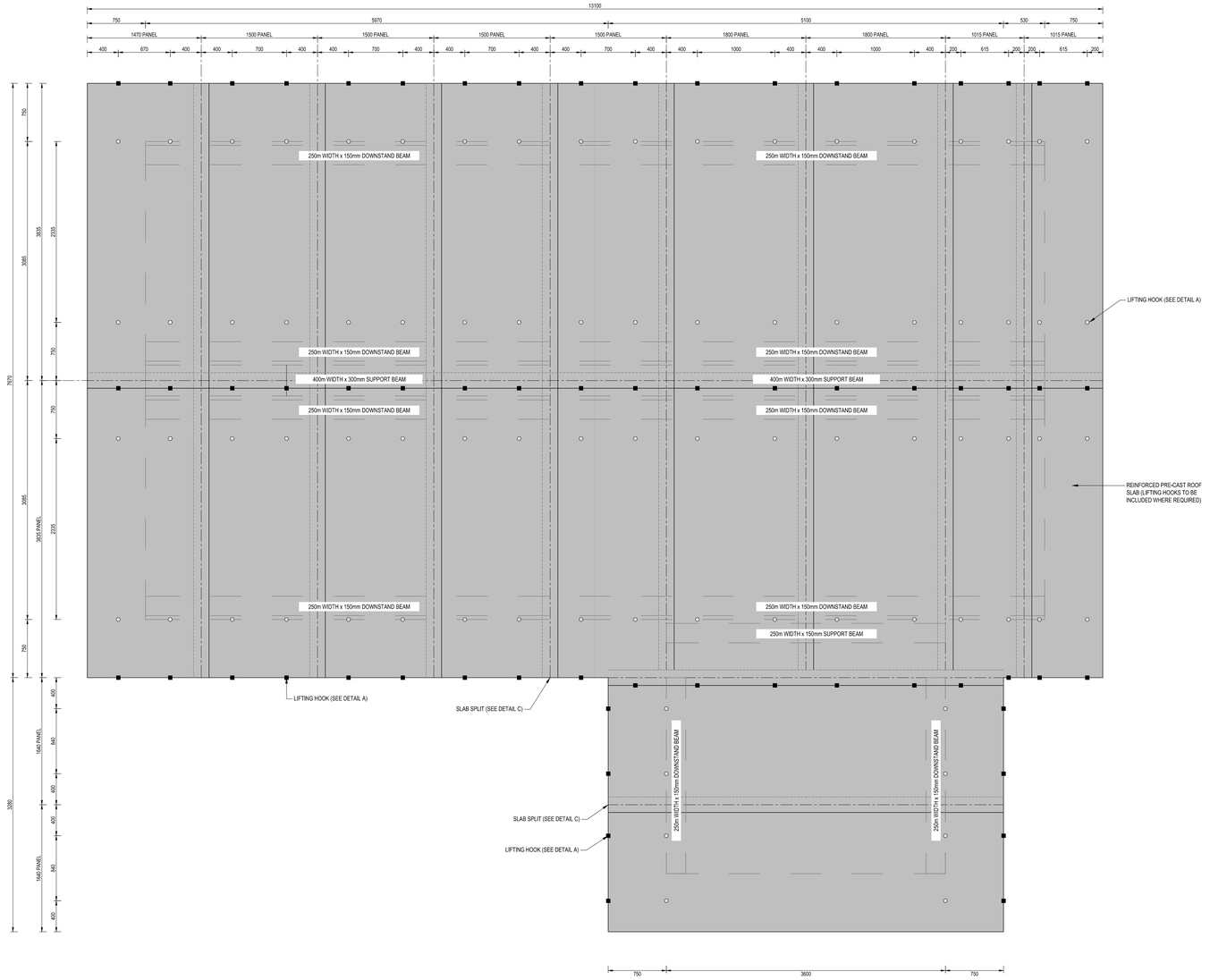

EXISTING ELECTRICAL SUB-STATION
COVER SLAB PLAN LAYOUT
SCALE 1:25

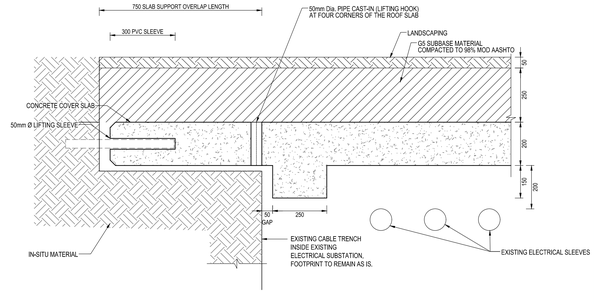

DETAIL A
SCALE 1:10

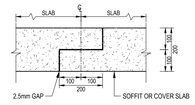

DETAIL B
SCALE 1:10

FOR TENDER

NOTES / LEGEND

APPROVED BY COUNCIL / CLIENT
CITY ENGINEER / CLIENT REG. NO. DATE

AMENDMENTS CODE
A,B,C../ : BEFORE TENDER
T0 / : TENDER DRAWING
0,1,2.../ : AFTER TENDER
Z / : AS BUILT
A : BY CLIENT
B : BY ARCHITECT
C : BY MECHANICAL OR ELECTRICAL
D : BY BVI
E : BY OTHER ( )

DATE	INITIAL	No./CODE	REVISION DESCRIPTION
20/07/2024	R.G.B	T0	ISSUED FOR TENDER

COPYRIGHT VESTS IN THIS DOCUMENT AND NO USE OR REPRODUCTION OR DUPLICATION THEREOF MAY OCCUR WITHOUT THE WRITTEN CONSENT OF BVI CONSULTING ENGINEERS

CLIENT
STELLENBOSCH MUNICIPALITY
STELLENBOSCH | PNIEL | FRANSCHHOEK

bvi 50 YEAR CELEBRATION EST 1967-2017
• ENGINEERING • PROCUREMENT • MANAGEMENT
Registration no. 1998/020150/07

PROVINCE	OFFICE	TEL	E-MAIL
Gauteng	Tshwane	(012) 366-7777	pta@bvi.co.za
	Polokwane	(015) 291-5400	plk@bvi.co.za
Free State	Bloemfontein	(051) 447-2121	bfn@bvi.co.za
	Welkom	(057) 352-8481	wkp@bvi.co.za
Northern Cape	Upington	(054) 332-6000	upt@bvi.co.za
	Springbok	(027) 712-8880	spb@bvi.co.za
KwaZulu-Natal	Durban	(031) 268-8282	dbn@bvi.co.za
	Empangeni	(035) 772-4712	emp@bvi.co.za
Eastern Cape	Port Elizabeth	(041) 373-4243	ple@bvi.co.za
	East London	(043) 726-1044	ptz@bvi.co.za
Western Cape	Cape Town	(021) 527-7000	cpt@bvivic.co.za

Visit or contact us online at www.bvigroup.co.za

PROJECT
ELECTRICAL SWITCHING & SUBSTATION BUILDING
ALEXANDER STR. STELLENBOSCH

DRAWING TITLE
COVER SLAB & CABLE COVER

APPROVED BY BVI
ENGINEER/TECHNOLOGIST REG. NO. 970672 DATE 20/07/2024

SCALE	AS SHOWN	DRAWN	R.BOTHA
DESIGNED	J.DE LANGE	CHECKED	L.PIENAAR

PLAN NUMBER	REVISION NO.	DATE SAVED
34092.00-201-03	T0	11 JULY 2024

0 10 50 100

O:\PROJECTS DRAWINGS\34000 - 34999\34092.00\STRUCTURAL\TENDER DRAWINGS\34092.00-201-03_REV T0.DWG

DETAIL I - NOTE:
1) ALL POLES SWAGED DOWN NO REDUCERS USED.
2) DESIGNING OF POLES TO NEW SANS 10225:2012.
3) AL TUBING TO SANS 657-1-2004 GRADE S355.
4) FABRICATION TO SANS 10214-1987.
5) GALVANIZING TO SANS 121 (ISO 1461)-1987-1.
6) WELDING TO SANS 10044 PART 1, ii, iii, iv.
7) MINIMUM WALL THICKNESS AT SWAGE 3mm.
8) SPIGOT SWAGED DOWN AND NOT WELDED IN.
9) POLE DESIGN IN ACCORDANCE WITH COCT SPECIFICATIONS. IT IS THE CLIENTS RESPONSIBILITY TO ENSURE IT MEETS WITH REQUIRED COCT SPECIFICATION AND DESIGN DRAWINGS.

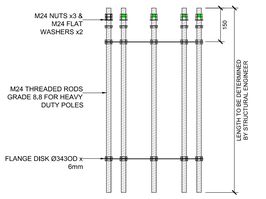

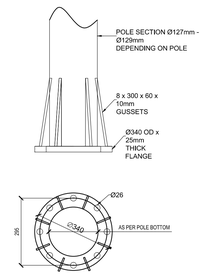

FLANGE DETAIL 25mm THICK

DETAIL I: BASE / FLANGE DESIGN FOR 5,2m - 13,5m H/D POLES

NOTES:
1. TRENCHES SHALL BE BACKFILLED AND COMPACTED IN LAYERS.
2. BACKFILL MATERIAL SHALL BE FREE OF ROCKS AND SHARP OBJECTS.
3. WIDTH OF CABLE TRENCH SHALL BE CALCULATED FOR ADEQUATE CLEARANCE BETWEEN CABLES.
4. CABLES SHALL BE LAID IN PARALLEL TO EACH OTHER.
5. CROSS OVER OF CABLES SHALL BE MINIMIZED.

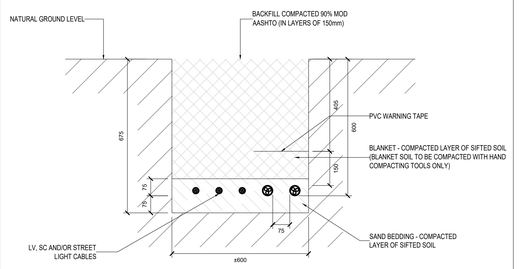

DETAIL H: TRENCH DETAILS

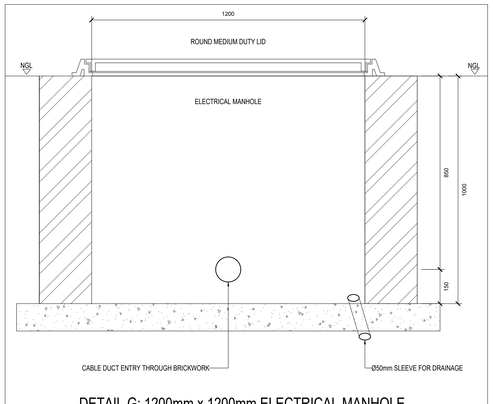

DETAIL G: 1200mm x 1200mm ELECTRICAL MANHOLE

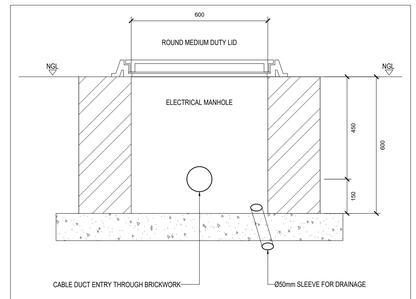

DETAIL F: 600mm x 600mm ELECTRICAL MANHOLE

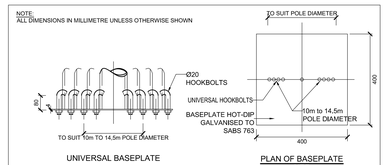

DETAIL B: UNIVERSAL BASE PLATE

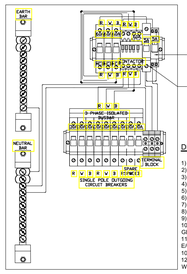

DETAIL D - NOTE:
1) 1x 60A TP AC3 400V CONTACTOR WITH 220V OPERATING COIL.
2) 3x 60A SKA 3 POLE MAIN INCOMING MCB.
3) 1x 5A SKA SINGLE POLE CONTROL CIRCUIT BREAKER.
4) 6x 30A SKA SINGLE POLE CONTROL CIRCUIT BREAKERS.
5) 1x SP 118 DIN MOUNTED AUTO-MANUAL BYPASS SWITCH.
6) 1x NEUTRAL BAR (9x16mm & 1x35mm TERMINALS).
7) 1x 3 PHASE ISOLATED BUSBAR.
8) IP65 BLANKING PLUGS (2x No2 PRATLEY)
9) 5x PRATLEY ENVIRO GLANDS (1x No1, 3x No2, 1x No3).
10) 1x PRE-DRILLED ALUMINIUM GLANDS PLATE (APERTURES TO ACCEPT GLANDS AS SPECIFIED).
11) 1x VYNKER TYPE ARA 43 IP66 POLYESTER ENCLOSURE (TYPE E1054A3-11D) COMPLETE WITH POLE MOUNTING BRACKETS, TYPE 1000-U429-01 PADLOCK FACILITY.
12) ALL WIRING TO BE 16mm² WITH EXCEPTION OF WIRING TO PHOTOCELL WHICH IS 2.5mm.

DETAIL D: TYPICAL KIOSK WIRING LAYOUT

10° RAKE ANGLE FOR LUMINAIRES

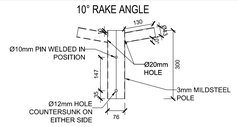

DETAIL E1: SHORT SIDE ENTRY LUMINAIRE ADAPTOR

0° RAKE ANGLE FOR LUMINAIRES

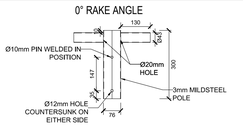

DETAIL E2: SHORT SIDE ENTRY LUMINAIRE ADAPTOR

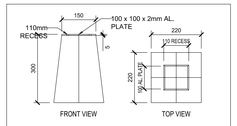

DETAIL C: CABLE ROUTE MARKER

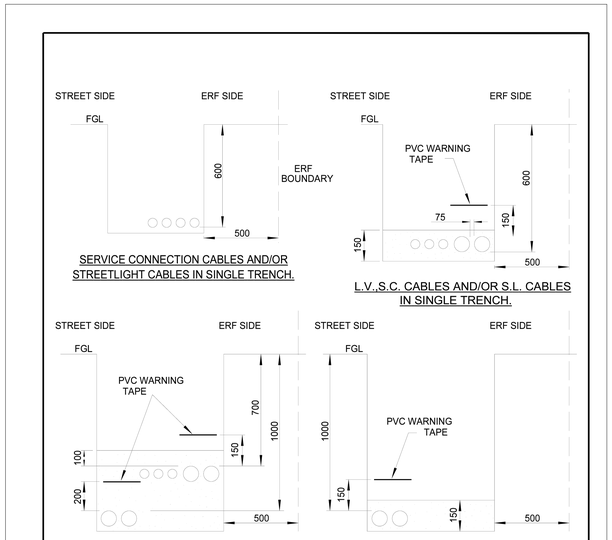

NOTES :
1. TRENCHES SHALL BE BACKFILLED AND COMPACTED IN LAYERS.
2. BACKFILL MATERIAL SHALL BE FREE OF ROCKS AND SHARP OBJECTS.
3. WIDTH OF CABLE TRENCH SHALL BE CALCULATED FOR ADEQUATE CLEARANCE BETWEEN CABLES.
4. CABLES SHALL BE LAID PARALLEL TO EACH OTHER.
5. CROSS OVERS OF CABLES SHALL BE MINIMIZED.

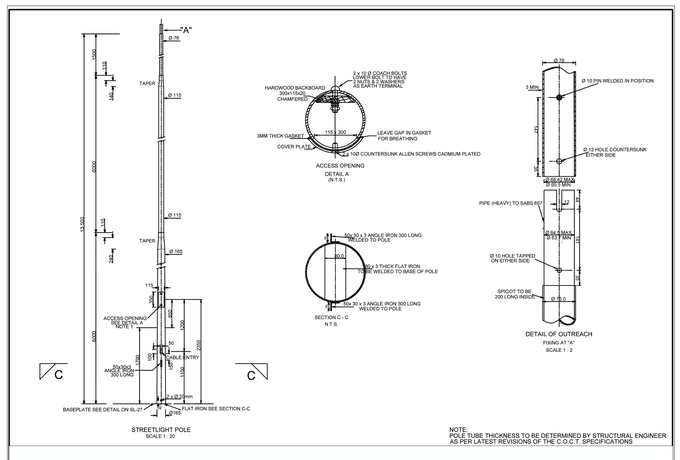

DETAIL A: 13,5m STREET LIGHT POLE

SPECIFIC PROJECT NOTES:

1) ALL WORK TO BE CARRIED OUT STRICTLY IN ACCORDANCE WITH THE APPLICABLE SANS REGULATIONS AND LOCAL AND MUNICIPAL REGULATIONS AND BY-LAWS.

2) NO WORK SHALL COMMENCE WITHOUT THE WAYLEAVE APPROVAL AND FULL IDENTIFICATION OF UNDERGROUND SERVICES.

3) THE CONTRACTOR APPOINTED TO DO THE WORK MUST BE ACCREDITED / REGISTERED IN ACCORDANCE WITH ALL THE RELEVANT STATUTORY REGULATIONS FOR ELECTRICAL ENGINEERING CONSTRUCTION WORK AND OBTAIN A PERMIT FROM LOCAL MUNICIPALITY BEFORE COMMENCING WORK.

4) THE APPOINTED CONTRACTOR SHALL ALSO MAKE CONTACT WITH LOCAL MUNICIPALITY, PRIOR TO COMMENCEMENT OF WORK.

5) A REPRESENTATIVE FROM LOCAL MUNICIPALITY MUST BE PRESENT AT THE FINAL TAKEOVER INSPECTION.

6) THE CONTRACTOR MUST SUBMIT A CERTIFICATE OF COMPLIANCE AT THE ABOVE HAND-OVER.

7) NO PART OF THIS DRAWING MAY BE SCALED.

8) ALL DIMENSIONS AND LEVELS GIVEN MUST BE CHECKED BEFORE COMMENCING ANY WORK. ANY DISCREPANCIES MUST BE REPORTED TO THE ENGINEER WITHOUT DELAY.

9) ELECTRICAL CONTRACTOR TO CROSS CHECK SERVICES DRAWINGS WITH CIVIL ENGINEERING DRAWINGS PRIOR TO CONSTRUCTION OF SERVICES.

10) ELECTRICAL CONTRACTOR SHALL COORDINATE THE INSTALLATION OF CABLES WITH CIVIL SERVICES.

11) CARE TO BE TAKEN NOT TO DISTURB OR DAMAGE EXISTING FINISHES AND SERVICES ON SITE.

12) ELECTRICAL CABLES SHALL BE INSTALLED A MIN. OF 600mm CLEARANCE FROM TELKOM OR FIBER SERVICES AND 1000mm AWAY FROM CIVIL SERVICES.

13) EACH POLE TO BE FITTED WITH A LABEL AT 3500mm AFGL TO INDICATE THE POLE NUMBER, CIRCUIT AND TYPE.

14) ELECTRICAL LOADS TO BE BALANCED ACROSS THE PHASES.

15) THIS DRAWING IS ONLY FOR THE ELECTRICAL INSTALLATION PURPOSES.

16) REFER TO THE LEGEND FOR DETAILS OF ELECTRICAL EQUIPMENT.

17) THE SITE ENGINEER MUST ENSURE THAT WORK IS DONE FROM THE LATEST REVISION OF DRAWINGS.

18) THE DESIGN ON THE DRAWING IS COPYRIGHT PROTECTED AND REMAINS THE PROPERTY OF THE ENGINEER.

NOTES / LEGEND

APPROVED BY COUNCIL / CLIENT

CITY ENGINEER / CLIENT | REG. NO. | DATE

AMENDMENTS CODE

A.B.C... / BEFORE TENDER
T0 / 1 / TENDER DRAWING
0.1,2,3... / AFTER TENDER
2 / AS BUILT

A: BY CLIENT
B: BY ARCHITECT
C: BY MECHANICAL OR ELECTRICAL
D: BY BVI
E: BY OTHERS ( )

DATE	INITIAL	No./CODE	REVISION DESCRIPTION
11/07/2024	W.B	T0/D	FOR TENDER PURPOSES

CLIENT

STELLENBOSCH
MUNICIPALITY • UMASIPALA • MUNISIPALITEIT

bvi 50 YEARS CELEBRATION EST 1967-2017
• ENGINEERING • PROCUREMENT • MANAGEMENT

PROVINCE	OFFICE	TEL	E-MAIL
Gauteng	Pretoria	(012) 942-1111	pta@bvigr.co.za
	Polokwane	(015) 291-0400	plk@bvi.co.za
Free State	Bloemfontein	(051) 447-2127	bfn@bvi.co.za
	Welkom	(057) 352-2480	wel@bvi.co.za
Northern Cape	Upington	(054) 337-6800	upt@bvi.co.za
	Springbok	(027) 712-8014	spb@bvi.co.za
KwaZulu-Natal	Durban	(031) 266-8362	dbn@bvi.co.za
	Empangeni	(035) 772-4112	emp@bvi.co.za
Eastern Cape	Port Elizabeth	(041) 373-4243	bviep@bvi.co.za
	East London	(043) 726-3885	tbv@bvi.co.za
Western Cape	Cape Town	(021) 527-7000	cpt@bvi.co.za

Visit or contact us online at www.bvigroup.co.za

Registration no. 1998/003172/07

PROJECT

REALIGNMENT OF THE R44/R310 AND ALEXANDER STREET JUNCTION

DRAWING TITLE

STREET LIGHTING: DETAIL DRAWINGS

APPROVED BY BVI

ENGINEER/TECHNOLOGIST | 20080282 REG. NO. | 11/07/2024 DATE

SCALE	NTS @ A0	DRAWN	WB
DESIGNED	WB	CHECKED	GH
PLAN NUMBER		REVISION NO.	DATE SAVED
34092.00-301-01		T0	11/07/2024

34092.00-301-01 REV T0.DWG

O:\PROJECTS DRAWINGS\34000 - 34999\34092.00\ELECTRICAL\TENDER DRAWINGS\34092.00-301-01 REV T0.DWG

0 10 50 100

NEW STREET LIGHTING KIOSK

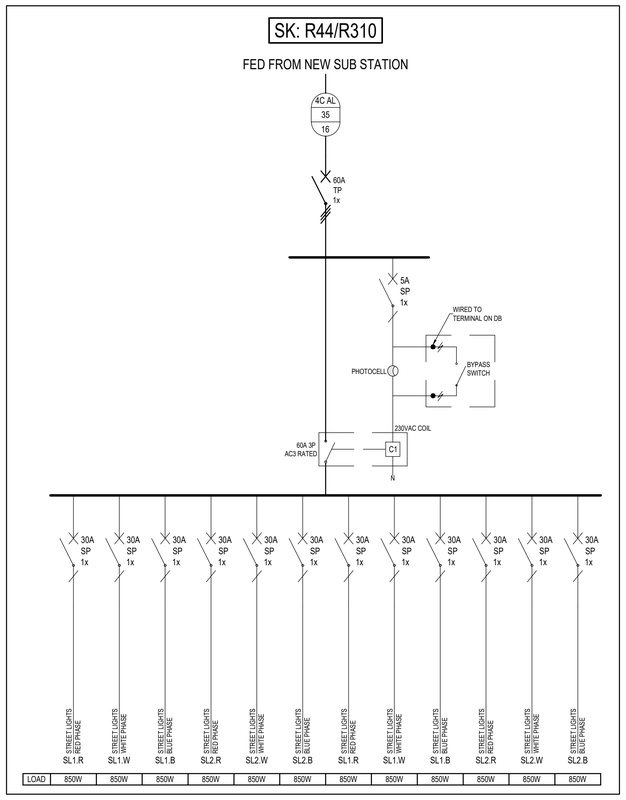

SPECIFIC PROJECT NOTES:

1) ALL WORK TO BE CARRIED OUT STRICTLY IN ACCORDANCE WITH THE APPLICABLE SANS REGULATIONS AND LOCAL AND MUNICIPAL REGULATIONS AND BY-LAWS.

2) NO WORK SHALL COMMENCE WITHOUT THE WAYLEAVE APPROVAL AND FULL IDENTIFICATION OF UNDERGROUND SERVICES.

3) THE CONTRACTOR APPOINTED TO DO THE WORK MUST BE ACCREDITED / REGISTERED IN ACCORDANCE WITH ALL THE RELEVANT STATUTORY REGULATIONS FOR ELECTRICAL ENGINEERING CONSTRUCTION WORK AND OBTAIN A PERMIT FROM LOCAL MUNICIPALITY BEFORE COMMENCING WORK.

4) THE APPOINTED CONTRACTOR SHALL ALSO MAKE CONTACT WITH LOCAL MUNICIPALITY, PRIOR TO COMMENCEMENT OF WORK.

5) A REPRESENTATIVE FROM LOCAL MUNICIPALITY MUST BE PRESENT AT THE FINAL TAKEOVER INSPECTION.

6) THE CONTRACTOR MUST SUBMIT A CERTIFICATE OF COMPLIANCE AT THE ABOVE HAND-OVER.

7) NO PART OF THIS DRAWING MAY BE SCALED.

8) ALL DIMENSIONS AND LEVELS GIVEN MUST BE CHECKED BEFORE COMMENCING ANY WORK. ANY DISCREPANCIES MUST BE REPORTED TO THE ENGINEER WITHOUT DELAY.

9) ELECTRICAL CONTRACTOR TO CROSS CHECK SERVICES DRAWINGS WITH CIVIL ENGINEERING DRAWINGS PRIOR TO CONSTRUCTION OF SERVICES.

10) ELECTRICAL CONTRACTOR SHALL COORDINATE THE INSTALLATION OF CABLES WITH CIVIL SERVICES.

11) CARE TO BE TAKEN NOT TO DISTURB OR DAMAGE EXISTING FINISHES AND SERVICES ON SITE.

12) ELECTRICAL CABLES SHALL BE INSTALLED A MIN. OF 600mm CLEARANCE FROM TELKOM OR FIBER SERVICES AND 1000mm AWAY FROM CIVIL SERVICES.

13) EACH POLE TO BE FITTED WITH A LABEL AT 3500mm AFGL TO INDICATE THE POLE NUMBER, CIRCUIT AND TYPE.

14) ELECTRICAL LOADS TO BE BALANCED ACROSS THE PHASES.

15) THIS DRAWING IS ONLY FOR THE ELECTRICAL INSTALLATION PURPOSES.

16) REFER TO THE LEGEND FOR DETAILS OF ELECTRICAL EQUIPMENT.

17) THE SITE ENGINEER MUST ENSURE THAT WORK IS DONE FROM THE LATEST REVISION OF DRAWINGS.

18) THE DESIGN ON THE DRAWING IS COPYRIGHT PROTECTED AND REMAINS THE PROPERTY OF THE ENGINEER.

NOTES / LEGEND

APPROVED BY COUNCIL / CLIENT

CITY ENGINEER / CLIENT | REG. NO. | DATE

AMENDMENTS CODE

A,B,C... / : BEFORE TENDER
T0 / : TENDER DRAWING
0,1,2,3... / : AFTER TENDER
Z / : AS BUILT

IA : BY CLIENT
IB : BY ARCHITECT
IC : BY MECHANICAL OR ELECTRICAL
ID : BY BVI
IE : BY OTHER ( )

DATE	INITIAL	No./CODE	REVISION DESCRIPTION
11/07/2024	W.B	T0/D	FOR TENDER PURPOSES

CLIENT

STELLENBOSCH
MUNICIPALITY • UMASIPALA • MUNISIPALITEIT

ISO 9001 REGISTERED
CESA
bvi 50 YEAR CELEBRATION EST 1967-2017
• ENGINEERING • PROCUREMENT • MANAGEMENT
Registration no. 1998/000157/07
Visit or contact us online at www.bvigroup.co.za

PROVINCE	OFFICE	☎	E-MAIL
Gauteng	Pretoria	(012) 940-1111	pta@bvigp.co.za
	Polokwane	(015) 291-5400	ply@bvib.co.za
Free State	Bloemfontein	(051) 447-2127	bfn@bvifs.co.za
	Welkom	(057) 353-2499	wel@bvifs.co.za
Northern Cape	Upington	(054) 337-8900	upt@bvinc.co.za
	Springbok	(027) 712-3614	spk@bvinc.co.za
KwaZulu Natal	Durban	(031) 266-8382	dbn@bvikn.co.za
	Empangeni	(035) 772-6112	emp@bvikn.co.za
Eastern Cape	Port Elizabeth	(041) 373-4343	bviec@mweb.co.za
	East London	(043) 735-3899	ble@bviec.co.za
Western Cape	Cape Town	(021) 527-7000	cpt@bviwc.co.za

PROJECT

REALIGNMENT OF THE R44/R310 AND ALEXANDER STREET JUNCTION

DRAWING TITLE

STREET LIGHTING SINGLE LINE DIAGRAM

APPROVED BY BVI

ENGINEER/TECHNOLOGIST | 20080282 REG. NO. | 11/07/2024 DATE

SCALE	NTS @ A0	DRAWN	WB
DESIGNED	WB	CHECKED	GH

PLAN NUMBER	REVISION NO.	DATE SAVED
34092.00-312-01	T0	11/07/2024

0 10 50 100

O:\PROJECTS DRAWINGS\34000 - 34999\34092.00\ELECTRICAL\TENDER DRAWINGS\34092.00-312-01 REV T0.DWG

34092.00-312-01 REV T0.DWG

SPECIFIC PROJECT NOTES:

1) ALL WORK TO BE CARRIED OUT STRICTLY IN ACCORDANCE WITH THE APPLICABLE SANS REGULATIONS AND LOCAL AND MUNICIPAL REGULATIONS AND BY-LAWS.

2) NO WORK SHALL COMMENCE WITHOUT THE WAYLEAVE APPROVAL AND FULL IDENTIFICATION OF UNDERGROUND SERVICES.

3) THE CONTRACTOR APPOINTED TO DO THE WORK MUST BE ACCREDITED / REGISTERED IN ACCORDANCE WITH ALL THE RELEVANT STATUTORY REGULATIONS FOR ELECTRICAL ENGINEERING CONSTRUCTION WORK AND OBTAIN A PERMIT FROM LOCAL MUNICIPALITY BEFORE COMMENCING WORK.

4) THE APPOINTED CONTRACTOR SHALL ALSO MAKE CONTACT WITH LOCAL MUNICIPALITY, PRIOR TO COMMENCEMENT OF WORK.

5) A REPRESENTATIVE FROM LOCAL MUNICIPALITY MUST BE PRESENT AT THE FINAL TAKEOVER INSPECTION.

6) THE CONTRACTOR MUST SUBMIT A CERTIFICATE OF COMPLIANCE AT THE ABOVE HAND-OVER.

7) NO PART OF THIS DRAWING MAY BE SCALED.

8) ALL DIMENSIONS AND LEVELS GIVEN MUST BE CHECKED BEFORE COMMENCING ANY WORK. ANY DISCREPANCIES MUST BE REPORTED TO THE ENGINEER WITHOUT DELAY.

9) ELECTRICAL CONTRACTOR TO CROSS CHECK SERVICES DRAWINGS WITH CIVIL ENGINEERING DRAWINGS PRIOR TO CONSTRUCTION OF SERVICES.

10) ELECTRICAL CONTRACTOR SHALL COORDINATE THE INSTALLATION OF CABLES WITH CIVIL SERVICES.

11) CARE TO BE TAKEN NOT TO DISTURB OR DAMAGE EXISTING FINISHES AND SERVICES ON SITE.

12) ELECTRICAL CABLES SHALL BE INSTALLED A MIN. OF 600mm CLEARANCE FROM TELKOM OR FIBER SERVICES AND 1000mm AWAY FROM CIVIL SERVICES.

13) EACH POLE TO BE FITTED WITH A LABEL AT 3500mm AFGL TO INDICATE THE POLE NUMBER, CIRCUIT AND TYPE.

14) ELECTRICAL LOADS TO BE BALANCED ACROSS THE PHASES.

15) THIS DRAWING IS ONLY FOR THE ELECTRICAL INSTALLATION PURPOSES.

16) REFER TO THE LEGEND FOR DETAILS OF ELECTRICAL EQUIPMENT.

17) THE SITE ENGINEER MUST ENSURE THAT WORK IS DONE FROM THE LATEST REVISION OF DRAWINGS.

18) THE DESIGN ON THE DRAWING IS COPYRIGHT PROTECTED AND REMAINS THE PROPERTY OF THE ENGINEER.

NAME	DB BLAKES ESTATE											
POSITION	INSIDE ROOM											
INSTALLATION	FLUSH	-	SEMI-FLUSH	-	SURFACE	-	FLOOR STANDING	X	WEATHER RESISTANT	-	INDOOR	X
DOOR LOCKS	PUSH BUTTON	-	CAM-LOCK	-	PADLOCKABLE LEVER	-	T - HANDLE	-	SQUARE DRIVE	X	3 - POINT LOCKABLE	-
METAL TYPE	ELECTRO GALV	-	GALVANISED	-	3CR12	X	304 S/S	-	316 S/S	-	POLYETHELYNE	-
METAL SIZE	1.2mm	-	1.6mm	-	2.0mm	X	3.0mm	-	-	-	-	-
EQUIPMENT TYPE	CIRCUIT BREAKERS	X	CONTACTORS	X	METERS	-	TIMERS	-	POWER TERMINALS	-	CONTROL TERMINALS	-
ACCESS	FRONT	X	REAR	-	BOTH	-						
ENTRY : INCOMING	TOP	-	BOTTOM	X	SIDE	-						
ENTRY : OUTGOING	TOP	-	BOTTOM	X	SIDE	-						
FAULT CURRENT	16kA											
COLOUR / FINISH	ORANGE											
MOUNTING HEIGHT	-											

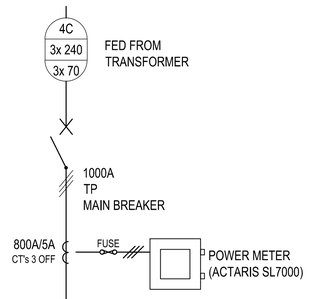

DB-BLAKES ESTATE

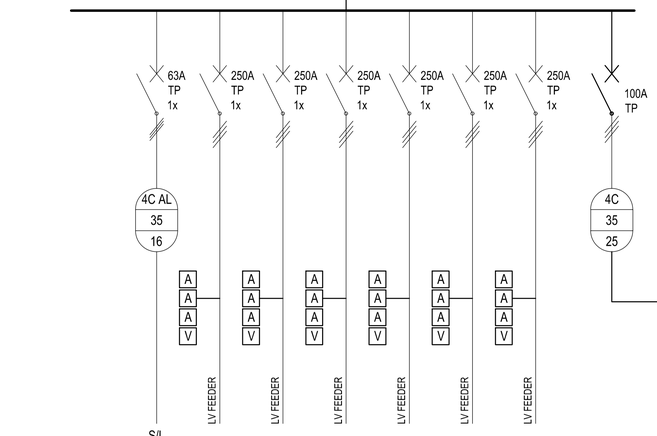

CONDUCTORS		120mm² 4C	120mm² 4C	120mm² 4C	120mm² 4C	120mm² 4C	120mm² 4C
EARTH CONDUCTOR		70mm²	70mm²	70mm²	70mm²	70mm²	70mm²
	CONDUIT						
	PHASE	RWB	RWB	RWB	RWB	RWB	RWB

S/S BUILDING SUB MAIN

NAME	S/S BUILDING SUB MAIN											
POSITION	INSIDE ROOM											
INSTALLATION	FLUSH	-	SEMI-FLUSH	-	SURFACE	-	FLOOR STANDING	X	WEATHER RESISTANT	-	INDOOR	X
DOOR LOCKS	PUSH BUTTON	-	CAM-LOCK	-	PADLOCKABLE LEVER	-	T - HANDLE	-	SQUARE DRIVE	X	3 - POINT LOCKABLE	-
METAL TYPE	ELECTRO GALV	-	GALVANISED	-	3CR12	X	304 S/S	-	316 S/S	-	POLYETHELYNE	-
METAL SIZE	1.2mm	-	1.6mm	-	2.0mm	X	3.0mm	-	-	-	-	-
EQUIPMENT TYPE	CIRCUIT BREAKERS	X	CONTACTORS	X	METERS	-	TIMERS	-	POWER TERMINALS	-	CONTROL TERMINALS	-
ACCESS	FRONT	X	REAR	-	BOTH	-						
ENTRY : INCOMING	TOP	-	BOTTOM	X	SIDE	-						
ENTRY : OUTGOING	TOP	-	BOTTOM	X	SIDE	-						
FAULT CURRENT	6kA											
COLOUR / FINISH	ORANGE											
MOUNTING HEIGHT	-											

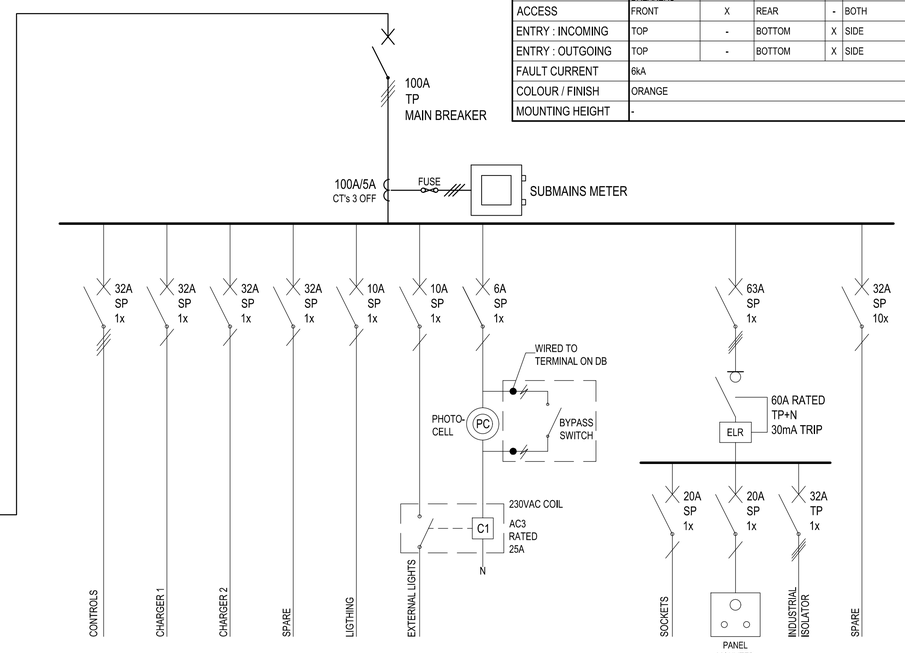

CONDUCTORS	16mm² 4C	6x2	6x2	6x2	2.5x2	2.5x2				2.5x2	2.5x2	6x4	4x2
EARTH CONDUCTOR	10mm²	4	4	4	2.5	2.5				2.5	2.5	4	2.5
CONDUIT													
PHASE	RWB	R	W	B	R	W				W	B	RWB	W

NOTES / LEGEND

APPROVED BY COUNCIL / CLIENT

CITY ENGINEER / CLIENT | REG. NO. | DATE

AMENDMENTS CODE

A,B,C... / : BEFORE TENDER
T0 / : TENDER DRAWING
0,1,2,3../ : AFTER TENDER
Z /: AS BUILT

IA : BY CLIENT
IB : BY ARCHITECT
IC : BY MECHANICAL OR ELECTRICAL
ID : BY BVI
IE : BY OTHER ( )

DATE	INITIAL	No./CODE	REVISION DESCRIPTION
11/07/2024	R.S	T0/D	FOR TENDER PURPOSES

CLIENT

STELLENBOSCH
MUNICIPALITY • UMASIPALA • MUNISIPALITEIT

bvi 50 YEAR CELEBRATION EST 1967-2017
• ENGINEERING • PROCUREMENT • MANAGEMENT
Registration no. 1966/002157/07

PROVINCE	OFFICE		E-MAIL
Gauteng	Pretoria	(012) 940-1111	pta@bvigp.co.za
	Polokwane	(015) 291-5400	pl@bvip.co.za
Free State	Bloemfontein	(051) 447-2137	bfn@bvifs.co.za
	Welkom	(057) 353-2499	wel@bvifs.co.za
Northern Cape	Upington	(054) 337-6600	upt@bvinc.co.za
	Springbok	(027) 712-3814	spk@bvinc.co.za
KwaZulu Natal	Durban	(031) 266-8382	dbn@bvikn.co.za
	Empangeni	(035) 772-6112	emp@bvikn.co.za
Eastern Cape	Port Elizabeth	(041) 373-4343	bviec@mweb.co.za
	East London	(043) 735-3889	BI@bvicc.co.za
Western Cape	Cape Town	(021) 527-7000	cpt@bviwc.co.za

Visit or contact us online at www.bvigroup.co.za

PROJECT

REALIGNMENT OF THE R44/R310 AND ALEXANDER STREET JUNCTION

DRAWING TITLE

SUBSTATION SINGLE LINE DIAGRAM - LV

APPROVED BY BVI

ENGINEER/TECHNOLOGIST | 20080282 REG. NO. | 11/07/2024 DATE

SCALE	NTS @ A0	DRAWN	RS
DESIGNED	RS	CHECKED	GH

PLAN NUMBER	REVISION NO.	DATE SAVED
34092.00-312-02	T0	11/07/2024

34092.00-312-01 REV T0.1.DWG

0 10 50 100

O:\PROJECTS DRAWINGS\34000 - 34999\34092.00\ELECTRICAL\TENDER DRAWINGS\34092.00-312-01 REV T0.1.DWG

1x SPARE 185mm² CU	DISTILLERS 2 70mm² CU	MS VILLA ROUX 35mm² CU	SS BRAAK 185mm² CU	BLAKES ESTATE 70mm² CU	METERING	BUS COUPLER	BUS RISER	DISTILLERS 1 70mm² CU	MS VAN DER STEL 70mm² CU	LOCAL TRANSFORMER 800kVA, 70mm² CU	SS HOFMAN 185mm² CU	SS WEIDENHOF 185mm² CU	1x SPARE 185mm² CU

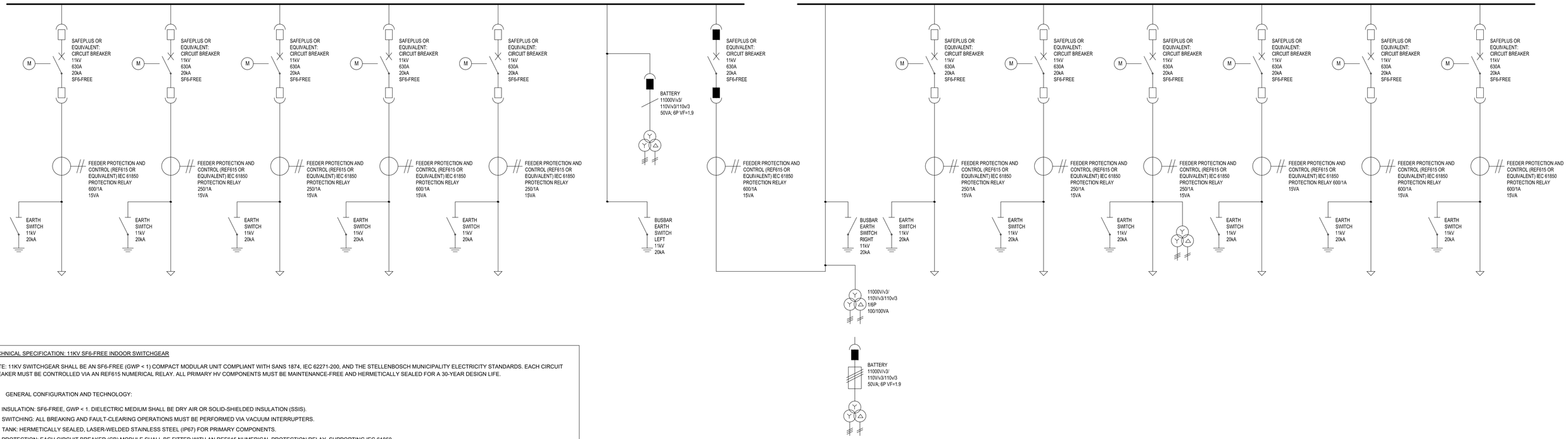

TECHNICAL SPECIFICATION: 11KV SF6-FREE INDOOR SWITCHGEAR

NOTE: 11KV SWITCHGEAR SHALL BE AN SF6-FREE (GWP < 1) COMPACT MODULAR UNIT COMPLIANT WITH SANS 1874, IEC 62271-200, AND THE STELLENBOSCH MUNICIPALITY ELECTRICITY STANDARDS. EACH CIRCUIT BREAKER MUST BE CONTROLLED VIA AN REF615 NUMERICAL RELAY. ALL PRIMARY HV COMPONENTS MUST BE MAINTENANCE-FREE AND HERMETICALLY SEALED FOR A 30-YEAR DESIGN LIFE.

1. GENERAL CONFIGURATION AND TECHNOLOGY:

- INSULATION: SF6-FREE, GWP < 1. DIELECTRIC MEDIUM SHALL BE DRY AIR OR SOLID-SHIELDED INSULATION (SSIS).
- SWITCHING: ALL BREAKING AND FAULT-CLEARING OPERATIONS MUST BE PERFORMED VIA VACUUM INTERRUPTERS.
- TANK: HERMETICALLY SEALED, LASER-WELDED STAINLESS STEEL (IP67) FOR PRIMARY COMPONENTS.
- PROTECTION: EACH CIRCUIT BREAKER (CB) MODULE SHALL BE FITTED WITH AN REF615 NUMERICAL PROTECTION RELAY, SUPPORTING IEC 61850.

2. STANDARDS & REGULATORY COMPLIANCE

THE DESIGN, MANUFACTURE, AND TESTING OF THE SWITCHGEAR MUST COMPLY WITH THE LATEST EDITIONS OF THE FOLLOWING STANDARDS:

2.1 INTERNATIONAL ELECTROTECHNICAL COMMISSION (IEC)

- IEC 62271-200: AC METAL-ENCLOSED SWITCHGEAR AND CONTROLGEAR FOR RATED VOLTAGES ABOVE 1 KV AND UP TO 52 KV.
- IEC 62271-1: COMMON SPECIFICATIONS FOR HIGH-VOLTAGE SWITCHGEAR AND CONTROLGEAR STANDARDS.
- IEC 62271-100: HIGH-VOLTAGE ALTERNATING CURRENT CIRCUIT BREAKERS.
- IEC 62271-102: ALTERNATING CURRENT DISCONNECTORS AND EARTHING SWITCHES.
- IEC 62271-103: SWITCHES FOR RATED VOLTAGES ABOVE 1 KV AND UP TO 52 KV.
- IEC 61850: COMMUNICATION NETWORKS AND SYSTEMS FOR POWER UTILITY AUTOMATION (FOR REF615 INTEGRATION).

2.2 SOUTH AFRICAN NATIONAL STANDARDS (SANS)

- SANS 1874: SWITCHGEAR - METAL-ENCLOSED RING MAIN UNITS FOR VOLTAGES ABOVE 1 KV AND UP TO 36 KV.
- SANS 10198: THE SELECTION, HANDLING, AND INSTALLATION OF ELECTRIC POWER CABLES (PART 10 FOR TERMINATIONS).
- SANS 62271-202: HIGH-VOLTAGE/LOW-VOLTAGE PREFABRICATED SUBSTATIONS.
- SANS 10142-2: THE WIRING OF PREMISES PART 2: MEDIUM-VOLTAGE INSTALLATIONS ABOVE 1 KV.

2.3 LOCAL GOVERNMENT & UTILITY REQUIREMENTS

- STELLENBOSCH MUNICIPALITY ELECTRICITY DEPARTMENT: MINIMUM REQUIREMENTS FOR THE DESIGN AND CONSTRUCTION OF ELECTRICAL INSTALLATIONS.
- NRS 003: METALLICALLY ENCLOSED SWITCHGEAR AND CONTROLGEAR FOR VOLTAGES ABOVE 1 KV AND UP TO 36 KV.
- NRS 012: CABLE TERMINATIONS AND JOINTS FOR MEDIUM-VOLTAGE SYSTEMS.
- OCCUPATIONAL HEALTH AND SAFETY ACT (ACT 85 OF 1993): SPECIFICALLY THE ELECTRICAL MACHINERY REGULATIONS.

3. TECHNICAL PERFORMANCE RATINGS

PARAMETER	SPECIFICATION
RATED VOLTAGE / OPERATING VOLTAGE	12 kV / 11kV
RATED LIGHTNING IMPULSE (BIL)	95 kV
RATED POWER FREQUENCY WITHSTAND	28 kV / 1 min
RATED SHORT-TIME WITHSTAND CURRENT	21 kA / 3 sec
INTERNAL ARC CLASSIFICATION (IAC)	AFLR 21 kA / 1s
PROTECTION RELAY INTERFACE	REF615 (HMI WITH SLD VISUALIZATION)

4. CONSTRUCTION & INSTALLATION REQUIREMENTS

- ENCLOSURE FINISH: CORROSION-RESISTANT POWDER COATING (RAL 7035) SUITABLE FOR THE WESTERN CAPE'S TEMPERATE/COASTAL ENVIRONMENT.
- INTERLOCKS: MANDATORY MECHANICAL AND ELECTRICAL INTERLOCKING AS PER IEC 62271-200 TO ENSURE OPERATOR SAFETY DURING MAINTENANCE AND EARTHING.
- CABLE COMPARTMENT: SUFFICIENT CLEARANCE FOR 11KV XLPE CABLES WITH INTERFACE C (400 SERIES) BOLTED-TYPE CONNECTORS.
- LABELING: ALL UNITS MUST HAVE PERMANENT, NON-CORROSIVE LABELING IN ENGLISH, INCLUDING A MIMIC DIAGRAM ON THE FRONT PANEL AND A NAMEPLATE WITH FULL TECHNICAL RATINGS.

NOTES / LEGEND

APPROVED BY COUNCIL / CLIENT

CITY ENGINEER / CLIENT | REG. NO. | DATE

AMENDMENTS CODE

A,B,C... / : BEFORE TENDER
T0 / : TENDER DRAWING
0,1,2,3../ : AFTER TENDER
Z / : AS BUILT

/A : BY CLIENT
/B : BY ARCHITECT
/C : BY MECHANICAL OR ELECTRICAL
/D : BY BVI
/E : BY OTHER ( )

DATE	INITIAL	No./CODE	REVISION DESCRIPTION
2026/03/20	R.S	T0/D	FOR TENDER PURPOSES

CLIENT

STELLENBOSCH
MUNICIPALITY • UMASIPALA • MUNISIPALITEIT

bvi 50 YEAR CELEBRATION EST 1967-2017
• ENGINEERING • PROCUREMENT • MANAGEMENT
Registration no. 1966/009181/07
CESA Consulting Engineers South Africa

PROVINCE	OFFICE		E-MAIL
Gauteng	Pretoria	(012) 940-1111	pta@bvigp.co.za
	Polokwane	(015) 291-5400	pl@bvilp.co.za
Free State	Bloemfontein	(051) 447-2137	bfn@bvifs.co.za
	Welkom	(057) 353-2499	wel@bvifs.co.za
Northern Cape	Upington	(054) 337-6600	upt@bvinc.co.za
	Springbok	(027) 712-3814	spk@bvinc.co.za
KwaZulu Natal	Durban	(031) 266-8382	dbn@bvikn.co.za
	Empangeni	(035) 772-6112	emp@bvikn.co.za
Eastern Cape	Port Elizabeth	(041) 373-4343	bviEC@mweb.co.za
	East London	(043) 726-3889	BviBuffEC@mweb.co.za
Western Cape	Cape Town	(021) 527-7000	cpt@bviwc.co.za

Visit or contact us online at www.bvigroup.co.za

PROJECT

REALIGNMENT OF THE R44/R310 AND ALEXANDER STREET JUNCTION

DRAWING TITLE

MV SWITCHGEAR LINE DIAGRAM

APPROVED BY BVI

ENGINEER/TECHNOLOGIST | 20080282 REG. NO. | 11/07/2024 DATE

SCALE	NTS @ A0	DRAWN	RS
DESIGNED	RS	CHECKED	GH

PLAN NUMBER	REVISION NO.	DATE SAVED
34092.00-421-01	T0	2026/03/20

0 10 50 100

O:\PROJECTS DRAWINGS\34000 - 34999\34092.00\ELECTRICAL\TENDER DRAWINGS\34092.00-421-01 REV T0.DWG

34092.00-421-01 REV T0.DWG

NOTE:
ARC VENTING AFL INTO CABLE TRENCH

1x SPARE	DISTILLERS 2	MS VILLA ROUX	SS BRAAK	BLAKES ESTATE	METERING	BUS COUPLER	BUS RISER	DISTILLERS 1	MS VAN DER STEL	LOCAL TRANSFORMER	SS HOFMAN	SS WEIDENHOF	1x SPARE
185mm² CU	70mm² CU	35mm² CU	185mm² CU	70mm² CU				70mm² CU	70mm² CU	800kVA, 70mm² CU	185mm² CU	185mm² CU	185mm² CU

NOTE:
AC SUPPLY FOR THE BTU COMING
FROM THE LOCAL LV TRANSFORMER

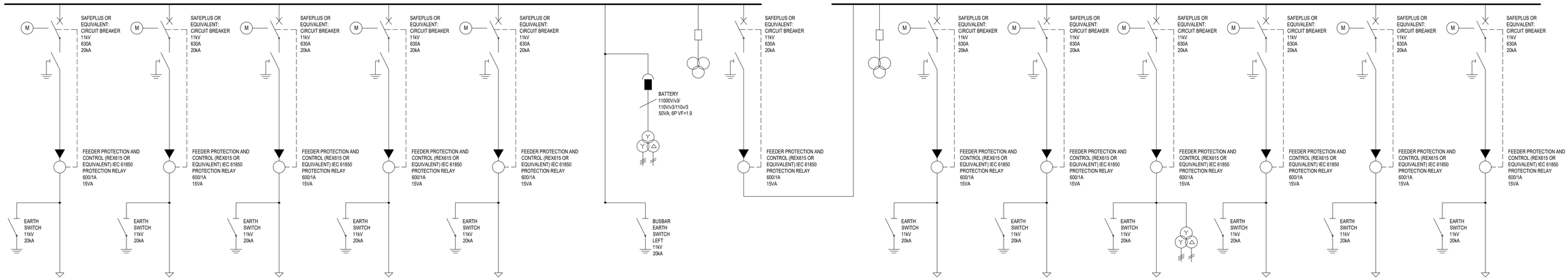

TECHNICAL SPECIFICATION: 11KV MODULAR COMPACT SWITCHGEAR

NOTE: 11KV SWITCHGEAR SHALL BE AN SF6-FREE (GWP < 1) COMPACT MODULAR UNIT COMPLIANT WITH SANS 1874, IEC 62271-200, AND THE STELLENBOSCH MUNICIPALITY ELECTRICITY STANDARDS. EACH CIRCUIT BREAKER MUST BE CONTROLLED VIA AN REF615 NUMERICAL RELAY. ALL PRIMARY HV COMPONENTS MUST BE MAINTENANCE-FREE AND HERMETICALLY SEALED FOR A 30-YEAR DESIGN LIFE.

1. SCOPE AND TECHNOLOGY
- TYPE: METAL-ENCLOSED, FACTORY-ASSEMBLED, COMPACT MODULAR SWITCHGEAR (GIS), EQUIVALENT TO THE ABB SAFEPLUS SERIES.
- INSULATION: SF6-INSULATED (DEFAULT) TO ALIGN WITH CURRENT STELLENBOSCH MUNICIPALITY FRAME CONTRACTS. THE MANUFACTURER MAY OFFER AN SF6-FREE (DRY AIR) EQUIVALENT IF THE PHYSICAL FOOTPRINT AND BUSBAR INTERFACES REMAIN IDENTICAL.
- ARC VENTING: THE UNIT SHALL BE DESIGNED FOR INTERNAL ARC FLAP (AFL) VENTING DOWNWARDS INTO THE CABLE TRENCH. HIGH-LEVEL BUS DUCTING IS STRICTLY PROHIBITED FOR THIS SECONDARY GIS CONFIGURATION.
- ENCLOSURE: HERMETICALLY SEALED, LASER-WELDED STAINLESS STEEL TANK (IP67) CONTAINING ALL PRIMARY HV PARTS.

2. STANDARDS & REGULATORY COMPLIANCE
- IEC 62271-200: AC METAL-ENCLOSED SWITCHGEAR.
- SANS 1874: METAL-ENCLOSED RING MAIN UNITS AND SWITCHGEAR.
- STELLENBOSCH MUNICIPALITY ELECTRICITY DEPT: STANDARDS FOR MV DISTRIBUTION AND FRAME CONTRACT REQUIREMENTS.
- NRS 003 / NRS 012: REGIONAL STANDARDS FOR SWITCHGEAR AND CABLE TERMINATIONS.

3. ELECTRICAL RATINGS

PARAMETER	VALUE
RATED VOLTAGE / OPERATING VOLTAGE	12 kV / 11kV
RATED SHORT-TIME WITHSTAND CURRENT	21 kA / 3 sec
INTERNAL ARC CLASSIFICATION (IAC)	AFL 21 kA / 1s (VENTING TO TRENCH)
BUSBAR RATED CURRENT	630 A

4. FUNCTIONAL UNIT COMPONENTS

4.1 CIRCUIT BREAKER & 3-POSITION SWITCH
- VACUUM CIRCUIT BREAKER (VCB): FIXED-TYPE VACUUM INTERRUPTERS FOR ALL SWITCHING.
- ISOLATION: INTEGRATED 3-POSITION DISCONNECTOR/EARTHING SWITCH (CLOSED / OPEN-DISCONNECTED / EARTHED).
- MOTORIZATION: BOTH THE VCB AND THE 3-POSITION MECHANISM MUST BE FULLY MOTORIZED (24V DC) TO FACILITATE REMOTE SCADA OPERATIONS.
- VTS: A CABLE VOLTAGE TRANSFORMER (VT) IS REQUIRED ON THE LOCAL TRANSFORMER FEEDER FOR MONITORING AND METERING.

4.2 PROTECTION & CONTROL (REX615)
- RELAY SERIES: REX615 NUMERICAL PROTECTION RELAY.
- ADVANTAGE: MUST SUPPORT HARDWARE MODULARITY ALLOWING FOR FIELD-SWAPPABLE CARDS AND END-USER MODIFICATIONS/REPAIRS.
- FUNCTIONS: STANDARD 50/51, 50N/51N, AND ARC FLASH PROTECTION (OPTICAL).
- COMMUNICATION: NATIVE IEC 61850 SUPPORT.

5. AUXILIARY POWER & BATTERY TRIPPING UNIT (BTU)
- BTU SUPPLY: THE BTU MUST BE ENERGIZED VIA A DEDICATED 230VAC SUPPLY FROM THE LOCAL LV TRANSFORMER. CHARGING THE BTU VIA A VOLTAGE TRANSFORMER (VT) IS STRICTLY PROHIBITED DUE TO THE RISK OF VT SATURATION AND DAMAGE.
- BTU SPECIFICATION:
  - AUTONOMY: MINIMUM 10 HOURS STANDBY TIME FOLLOWING A MAINS FAILURE.
  - VOLTAGE: NOMINAL 24V DC (OR AS REQUIRED BY THE PROTECTION/MOTORIZATION SCHEME).
  - MONITORING: VISUAL ALARMS FOR "MAINS FAIL," "BATTERY LOW," AND "CHARGER FAIL," WITH POTENTIAL-FREE CONTACTS FOR REMOTE SCADA MONITORING.

6. CONSTRUCTION & INSTALLATION
- CABLE INTERFACE: OUTER CONE BUSHINGS (INTERFACE C / 400 SERIES) SUITABLE FOR 11KV XLPE CABLES.
- VISUAL MIMIC: THE FRONT PANEL MUST FEATURE A MECHANICAL MIMIC DIAGRAM AND A VOLTAGE DETECTION SYSTEM (VDS).
- ENVIRONMENT: CORROSION-RESISTANT FINISH (RAL 7035) SUITABLE FOR THE STELLENBOSCH/WESTERN CAPE CLIMATE.

NOTES / LEGEND

APPROVED BY COUNCIL / CLIENT

CITY ENGINEER / CLIENT | REG. NO. | DATE

AMENDMENTS CODE

A,B,C... / : BEFORE TENDER
T0 / : TENDER DRAWING
0,1,2,3.../ : AFTER TENDER
Z / : AS BUILT

IA : BY CLIENT
IB : BY ARCHITECT
IC : BY MECHANICAL OR ELECTRICAL
ID : BY BVI
IE : BY OTHER ( )

DATE	INITIAL	No./CODE	REVISION DESCRIPTION
2026/03/20	R.S	T0/D	FOR TENDER PURPOSES
2026/04/01	R.S	T1/D	FOR TENDER PURPOSES

CLIENT

STELLENBOSCH
MUNICIPALITY • UMASIPALA • MUNISIPALITEIT

• ENGINEERING • PROCUREMENT • MANAGEMENT
Registration no. 1998/002157/07

PROVINCE	OFFICE	☎	E-MAIL
Gauteng	Pretoria	(012) 940-1111	pta@bvigc.co.za
	Polokwane	(015) 291-5400	pl@bvitp.co.za
Free State	Bloemfontein	(051) 447-2127	bfn@bvifs.co.za
	Welkom	(057) 353-2499	wel@bvifs.co.za
Northern Cape	Upington	(054) 337-6600	upt@bvinc.co.za
	Springbok	(027) 712-3814	spk@bvinc.co.za
KwaZulu Natal	Durban	(031) 266-8362	dbn@bvikn.co.za
	Empangeni	(035) 772-8112	emp@bvikn.co.za
Eastern Cape	Port Elizabeth	(041) 373-4343	bvIEC 61850@mweb.co.za
	East London	(043) 735-3889	Bel@bvIEC 61850.co.za
Western Cape	Cape Town	(021) 527-7000	cpt@bvinc.co.za

Visit or contact us online at www.bvigroup.co.za

PROJECT

REALIGNMENT OF THE R44/R310 AND ALEXANDER STREET JUNCTION

DRAWING TITLE

MV SWITCHGEAR LINE DIAGRAM

APPROVED BY BVI

ENGINEER/TECHNOLOGIST | 20080282 REG. NO. | 01/04/2026 DATE

SCALE	NTS @ A0	DRAWN	RS
DESIGNED	RS	CHECKED	GH

PLAN NUMBER	REVISION NO.	DATE SAVED
34092.00-421-01	T1	01/04/2026

34092.00-421-01 REV T1.DWG

0 10 50 100

O:\PROJECTS DRAWINGS\34000 - 34999\34092.00\ELECTRICAL\TENDER DRAWINGS\34092.00-421-01 REV T1.DWG

Thursday, 11 July 2024

FOR TENDER

LIGHTING LEGEND

	STREET LIGHTING KIOSK.
	SINGLE SIDED STREET LIGHT FITTING, AS PER BEKA LEDLUME XP2 40LED/100W OPTIC 5037, SL37 COCT POLE, 12m MOUNTING HEIGHT, WITH 250mm SPIGOT WITH 0° INCLINATION ANGLE.
	DOUBLE SIDED STREET LIGHT FITTING, AS PER BEKA LEDLUME XP2 40LED/100W OPTIC 5037, SL37 COCT POLE, 12m MOUNTING HEIGHT, WITH 250mm SPIGOT WITH 0° INCLINATION ANGLE.
	STREET LIGHTING FEEDER CABLE, 25mm² x 4C PVC SWA PVC ALUMINIUM CABLE
	2x0110mm PVC CLASS 6 DUCT FOR STREET LIGHTING CABLES, UNLESS OTHERWISE INDICATED ON DRAWING.
	2x Ø160mm & 2x0110mm PVC CLASS 6 DUCT FOR FUTURE CABLES AT ALL INTERSECTIONS, 1m DEEP.
	ELECTRICAL MANHOLE. SIZE AS INDICATED ON DRAWING.

ADAM TAS ROAD

STRAND ROAD

STELLENBOSCH STATION

HEROLD STREET

STASIE STREET

PAPEGAAI STREET

ALEXANDER STREET

ALEXANDER STREET

DU TOIT STREET

DU TOIT STREET

EXISTING SUBSTATION

NEW PROPOSED SUBSTATION

EXISTING S/L KIOSK

Y 13800 X 3756600

Y 13700 X 3756600

Y 13600 X 3756600

SPECIFIC PROJECT NOTES:

1) ALL WORK TO BE CARRIED OUT STRICTLY IN ACCORDANCE WITH THE APPLICABLE SANS REGULATIONS AND LOCAL AND MUNICIPAL REGULATIONS AND BY-LAWS.

2) NO WORK SHALL COMMENCE WITHOUT THE WAYLEAVE APPROVAL AND FULL IDENTIFICATION OF UNDERGROUND SERVICES.

3) THE CONTRACTOR APPOINTED TO DO THE WORK MUST BE ACCREDITED / REGISTERED IN ACCORDANCE WITH ALL THE RELEVANT STATUTORY REGULATIONS FOR ELECTRICAL ENGINEERING CONSTRUCTION WORK AND OBTAIN A PERMIT FROM LOCAL MUNICIPALITY BEFORE COMMENCING WORK.

4) THE APPOINTED CONTRACTOR SHALL ALSO MAKE CONTACT WITH LOCAL MUNICIPALITY, PRIOR TO COMMENCEMENT OF WORK.

5) A REPRESENTATIVE FROM LOCAL MUNICIPALITY MUST BE PRESENT AT THE FINAL TAKEOVER INSPECTION.

6) THE CONTRACTOR MUST SUBMIT A CERTIFICATE OF COMPLIANCE AT THE ABOVE HAND-OVER.

7) NO PART OF THIS DRAWING MAY BE SCALED.

8) ALL DIMENSIONS AND LEVELS GIVEN MUST BE CHECKED BEFORE COMMENCING ANY WORK. ANY DISCREPANCIES MUST BE REPORTED TO THE ENGINEER WITHOUT DELAY.

9) ELECTRICAL CONTRACTOR TO CROSS CHECK SERVICES DRAWINGS WITH CIVIL ENGINEERING DRAWINGS PRIOR TO CONSTRUCTION OF SERVICES.

10) ELECTRICAL CONTRACTOR SHALL COORDINATE THE INSTALLATION OF CABLES WITH CIVIL SERVICES.

11) CARE TO BE TAKEN NOT TO DISTURB OR DAMAGE EXISTING FINISHES AND SERVICES ON SITE.

12) ELECTRICAL CABLES SHALL BE INSTALLED A MIN. OF 600mm CLEARANCE FROM TELKOM OR FIBER SERVICES AND 1000mm AWAY FROM CIVIL SERVICES.

13) EACH POLE TO BE FITTED WITH A LABEL AT 3500mm AFGL TO INDICATE THE POLE NUMBER, CIRCUIT AND TYPE.

14) ELECTRICAL LOADS TO BE BALANCED ACROSS THE PHASES.

15) THIS DRAWING IS ONLY FOR THE ELECTRICAL INSTALLATION PURPOSES.

16) REFER TO THE LEGEND FOR DETAILS OF ELECTRICAL EQUIPMENT.

17) THE SITE ENGINEER MUST ENSURE THAT WORK IS DONE FROM THE LATEST REVISION OF DRAWINGS.

18) THE DESIGN ON THE DRAWING IS COPYRIGHT PROTECTED AND REMAINS THE PROPERTY OF THE ENGINEER.

0 10 50 100

NOTES / LEGEND

APPROVED BY COUNCIL / CLIENT

CITY ENGINEER / CLIENT — REG. NO. — DATE

AMENDMENTS CODE

A.B.C. / : BEFORE TENDER
TD / : TENDER DRAWING
S.1.2.3. / : AFTER TENDER
Z / : AS BUILT

A: BY CLIENT
B: BY ARCHITECT
C: BY MECHANICAL OR ELECTRICAL
D: BY BH
E: BY (OTHER))

DATE	INITIAL	No./CODE	REVISION DESCRIPTION
11/07/2024	W.B	TO/D	FOR TENDER PURPOSES

CLIENT

STELLENBOSCH
STELLENBOSCH • PNIEL • FRANSCHHOEK
MUNISIPALITEIT • UMASIPALA • MUNICIPALITY

bvi 50 YEAR CELEBRATION EST 1967-2017
• ENGINEERING • PROCUREMENT • MANAGEMENT
Registration No. 1998/003167/07
CESA
PROVINCE — OFFICE — E-MAIL
Gauteng — Pretoria (012) 940-1111 — pta@bvigp.co.za
— Polokwane (015) 291-5400 — ply@bvi.co.za
Free State — Bloemfontein (051) 447-2137 — bfn@bvi.co.za
— Welkom (057) 353-2400 — wel@bvi.co.za
Northern Cape — Upington (054) 337-6000 — upt@bvinc.co.za
— Springbok (027) 712-2814 — spb@bvinc.co.za
KwaZulu-Natal — Durban (031) 266-6300 — dbn@bvikzn.co.za
— Empangeni (035) 772-6113 — emp@bvikzn.co.za
Eastern Cape — Port Elizabeth (041) 373-4240 — bvie@mweb.co.za
— East London (043) 726-1999 — tlo@bvi.co.za
Western Cape — Cape Town (021) 527-7300 — cpt@bvi.co.za
Visit or contact us online at www.bvigroup.co.za

PROJECT

REALIGNMENT OF THE R44 / R310 & ALEXANDER STREET JUNCTION

DRAWING TITLE

STREET LIGHTING LAYOUT

APPROVED BY BH

ENGINEERING TECHNOLOGIST

20080282 REG. NO. — 11/07/2024 DATE

SCALE	1:500 @ A0	DRAWN	W.B
DESIGNED	W.B	CHECKED	G.H
PLAN NUMBER		REVISION NO.	DATE SAVED
34092.00-431.01		T0	11/07/2024

34092.00-431-01 REV T0 - STREETLIGHTING.DWG

O:\PROJECTS DRAWINGS\34000 - 34999\34092.00\ELECTRICAL\TENDER DRAWINGS\34092.00-431-01 REV T0 - STREETLIGHTING.DWG

GENERAL NOTES:

1. THIS SET OF DRAWINGS IS TO BE READ IN CONJUNCTION WITH ARCHITECTURAL, CIVIL, MECHANICAL AND ELECTRICAL DRAWINGS AS WELL AS PROJECT SPECIFICATIONS. ANY DISCREPANCIES ARE TO BE REPORTED TO THE ENGINEER IMMEDIATELY AND BEFORE CONSTRUCTION COMMENCE.
2. THE CONTRACTOR SHALL CHECK ALL DIMENSIONS AND LEVELS ON SITE. ANY DISCREPANCIES SHALL BE REPORTED TO THE ENGINEER IMMEDIATELY AND BEFORE PREPARATION OF SHOP DRAWINGS, ORDERING OF MATERIALS OR CONSTRUCTION COMMENCE.
3. SCALING FROM THESE DRAWINGS IS NOT PERMITTED. ONLY DIMENSIONS AND LEVELS INDICATED ON THE DRAWINGS MAY BE DEEMED CORRECT. IF ANY DIMENSION OR LEVEL SEEMS DOUBTFUL THE ENGINEER MUST BE CONSULTED.
4. DIMENSIONS ARE GIVEN IN MILLIMETRES (mm) AND LEVELS IN METRES (m) TO 3 DECIMAL PLACES.
5. ALL BASES, PILES AND COLUMNS ARE SYMMETRICAL ON GRIDLINES UNLESS OTHERWISE INDICATED.
6. ALL WORK AND MATERIALS SHALL COMPLY WITH THE MOST RECENT REVISIONS OF THE NATIONAL BUILDING REGULATIONS (NBR) AND RELEVANT SANS CODES OF PRACTISE AND STANDARD METHODS.
7. THE CONTRACTOR SHALL ADHERE TO THE FOLLOWING CODES DURING CONSTRUCTION AS APPLICABLE:
   SANS 2001 CONSTRUCTION WORKS:
   PART CC1: CONCRETE WORKS (STRUCTURAL)
   PART CC2: CONCRETE WORKS (MINOR WORKS)
   PART CG1: INSTALLATION OF GLAZING IN WINDOW AND DOOR FRAMES:
   PART CM1: MASONRY WALLING
   PART CM2: STRIP FOOTINGS, PAD FOOTINGS AND SLAB-ON-THE-GROUND FOUNDATIONS FOR MASONRY WALLING
   PART CS1: STRUCTURAL STEELWORK
   PART CT1: STRUCTURAL TIMBERWORK (FLOORING)
   PART CT2: STRUCTURAL TIMBERWORK (ROOFING)
   PART EM1: CEMENT PLASTER
   SANS 10155 ACCURACY IN BUILDINGS
   GRADE II PERMISSIBLE DEVIATION / TOLERANCE SHALL APPLY UNLESS OTHERWISE NOTED.
8. ONE COPY OF EACH OF THESE CODES SHALL BE KEPT ON SITE AND SHALL BE MADE AVAILABLE TO THE ENGINEER ON REQUEST.
9. LATEST REVISIONS OF ALL DRAWINGS, BENDING SCHEDULES AND RELEVANT REGULATIONS, SPECIFICATIONS AND CODES SHALL BE AVAILABLE ON SITE AT ALL TIMES.
10. THE CONTRACTOR SHALL AT THE COMMENCEMENT OF THE PROJECT ACQUAINT HIMSELF WITH THE AVAILABILITY AND DELIVERY TIME OF ALL MATERIALS AND PRODUCTS SPECIFIED TO ENSURE THAT SUCH MATERIALS AND PRODUCTS ARE ORDERED WELL IN ADVANCE.
11. AN INSTRUCTION BOOK SHALL BE KEPT ON SITE FOR USE BY THE ENGINEER TO RECORD ALL INSPECTIONS AND INSTRUCTIONS. ALL INSTRUCTIONS SHALL BE RECORDED, SIGNED BY THE CONTRACTOR AND A COPY THEREOF SENT TO THE ENGINEERS OFFICE.
12. ALL PROPRIETARY MATERIAL AND PRODUCTS ARE TO BE APPROVED BY THE ENGINEER IN WRITING BEFORE ORDERING AND INSTALLATION THEREOF.
13. ALL PROPRIETARY MATERIAL AND PRODUCTS SHALL BE INSTALLED STRICTLY TO THE MANUFACTURER'S SPECIFICATION.
14. ALL UNDERGROUND PIPED SERVICES AND CABLES MUST BE LAID DURING OR SOON AFTER THE CONSTRUCTION OF COLUMN, WALL AND SHAFT BASES AND BEFORE CONSTRUCTION OF SURFACE BEDS AND GROUND SLABS COMMENCE.
15. CARE SHALL BE TAKEN NOT TO DAMAGE WATERPROOFING MEMBRANES, FILTERS OR OTHER MATERIAL DURING ANY STAGE OF CONSTRUCTION. SHOULD DAMAGE OCCUR THE CONTRACTOR SHALL MAKE GOOD AT HIS OWN COST.
16. CEMENT SHALL NOT BE STORED FOR PERIODS LONGER THAN 6 WEEKS WITHOUT WRITTEN APPROVAL OF THE ENGINEER.

GENERAL SANS CODES:

THE CONTRACTOR SHALL ADHERE TO THE FOLLOWING CODES DURING CONSTRUCTION AS APPLICABLE:
SANS 2001 CONSTRUCTION WORKS:
PART CC1: CONCRETE WORKS (STRUCTURAL)
PART CC2: CONCRETE WORKS (MINOR WORKS)
PART CG1: INSTALLATION OF GLAZING IN WINDOW AND DOOR FRAMES:
PART CM1: MASONRY WALLING
PART CS1: STRUCTURAL STEELWORK
PART CT1: STRUCTURAL TIMBERWORK (FLOORING)
PART CT2: STRUCTURAL TIMBERWORK (ROOFING)
PART EM1: CEMENT PLASTER
SANS 10155 ACCURACY IN BUILDINGS
GRADE II PERMISSIBLE DEVIATION / TOLERANCE SHALL APPLY UNLESS OTHERWISE NOTED.
ONE COPY OF EACH OF THESE CODES SHALL BE KEPT ON SITE AND SHALL BE MADE AVAILABLE TO THE ENGINEER ON REQUEST.

CAVITY FILLED WALL CONSTRUCTION METHODOLOGY:

1. WALLS TO BE CONSTRUCTED IN 600mm HIGH INTERVALS.
2. PRIOR TO CASTING, THE WALL CAVITY TO BE CLEANED OUT FROM ALL UNWANTED MATERIALS.
3. CONCRETE TO BE CAST INTO CAVITY PRIOR TO CONSTRUCTION OF NEXT 600mm.
4. CARE TO BE TAKEN TO ENSURE THAT BRICK SKINS ARE TIED TOGETHER SUFFICIENTLY WITH APPROVED BRICKFORCE AT MAX 340c/c.
5. NO PERFORATED BRICKS SHALL BE USED FOR RETAINING WALLS OR BELOW GROUND LEVEL

FOUNDATION PREPARATION UNDER ALL FOUNDATIONS: SURFACE BEDS AND RC SLABS ON GROUND:

1. SITE CLEARANCE AND PREPARATION BEFORE CONSTRUCTION COMMENCE:
   a. REMOVE TO SPOIL ALL REMNANTS OF EXISTING STRUCTURES, RUBBLE, DUMPED MATERIAL AND TAR SURFACING.
   b. FELL TREES AND REMOVE THEIR STUMPS AND MAJOR ROOTS TO SPOIL.
   c. REMOVE THE ROOT-RICH TOP 100mm OF THE GROUND TO SPOIL.
   d. RIP THE UPPER 200mm TO EXPOSE EXTRANEOUS MATERIAL.
   e. REMOVE THE EXTRANEOUS MATERIAL (BRICKS, WOOD, ETC.).
2. EXCAVATIONS:
   a. THE SOILS ARE COHESIONLESS AND STEEPLY EXCAVATED CUT OR STEEP FILL (EMBANKMENT) SLOPES SHALL BE AVOIDED.
   b. FOR TEMPORARY EXCAVATIONS AND SERVICE TRENCHES THE FOLLOWING SLOPE BATTERS SHALL BE ADHERED TO

DEPTH	BATTER
i. 0-1m	VERTICAL
ii. 1m - 1.5m	1:0.75
iii. 1.5m - 2.5m	1:1

   c. THESE BATTERS SHALL BE CHECKED BY A COMPETENT PERSON AS SOON AS THE INITIAL EXCAVATIONS ARE MADE, AND ROUTINELY THEREAFTER TO ENSURE SAFE CONDITIONS ARE MAINTAINED.
   d. NO PERSON SHALL ENTER AN EXCAVATION IF GROUNDWATER OR STANDING WATER OCCURS IN IT PENDING A MODIFICATION TO THE SLOPE BATTER AND/OR OTHER SLOPE STABILISATION MEASURES.
3. RE-USE OF SCALPED IN-SITU SOIL
   IN-SITU MATERIAL CAN ONLY BE USED IF:
   a. RUN THE SOIL THROUGH A GRIZZLY TO REMOVE EXTRANEOUS MATERIAL INCLUDING ROOTS (TO SPOIL)
   b. TEST THE REMAINING SOIL FOR G7 OR G8 SUITABILITY IN RE-USE AS ENGINEERED FILL; BACKFILLING BELOW SURFACE BEDS AND SLABS; GENERAL FILL ABOVE COLUMN BASES AND NEXT TO STRIP FOOTINGS
4. FOUNDATIONS – PAD AND STRIP FOOTINGS:
   a. EXCAVATE TO A DEPTH OF 1.0m BELOW THE CURRENT GROUND LEVEL OR TO IN-SITU SOIL BELOW FILL MATERIAL / MAN-MADE SOILS
   b. MAXIMUM ALLOWABLE BEARING PRESSURE = 150 kPa (TBC).
   c. STRIP FOOTINGS SHALL BE REINFORCED
5. SURFACE BEDS AND RC SLABS-ON-GROUND
   a. APPROVED CLEAN SANDY MATERIAL (G7 OR G8) SHALL BE PLACED IN 200mm THICK LAYERS, MOISTENED WITHIN 2% OF OPTIMUM MOISTURE CONTENT AND COMPACTED TO AT LEAST 98% OF MOD DENSITY BETWEEN INSITU MATERIAL AND UNDERSIDE OF SUBBASE.
   b. G5 QUALITY IMPORTED MATERIAL (PREFERABLY CRUSHED, WEATHERED MALMESBURY AGGREGATE) SHALL BE USED FOR THE SUB BASE LAYER
   c. DENSITY SHALL BE TESTED BY UNDERTAKING NUCLEAR DENSIMETER TESTS PER LAYER AND AT A RATE OF ONE TEST PER EVERY 75m² SOIL PLACED.
6. BACKFILLING:
   a. REMOVE WATER FROM EXCAVATIONS IF PRESENT AND LAY A PIONEER LAYER OF CLEAN RUBBLY MATERIAL OR AGGREGATE TO ENABLE FILLING TO COMMENCE ON A FIRM SURFACE.
   b. EXCAVATIONS (INCLUDING TRIAL PITS) MUST BE FILLED WITH APPROVED CLEAN SAND IN 100mm THICK LAYERS, MOISTENED AND COMPACTED TO AT LEAST 98% OF MOD AASHTO MAXIMUM DRY DENSITY.
   c. DENSITY SHALL BE TESTED BY UNDERTAKING DPC TESTS TO A 1.5m DEPTH ON A 10mx10m GRID ACROSS THE FOOTPRINT OF THE BUILDING AFTER SUBGRADE COMPACTION HAS BEEN COMPLETED.
   d. THE MAXIMUM DCP PENETRATION RATE SHOULD BE 20mm PER BLOW.
7. GENERAL:
   a. ALL EXCAVATIONS MUST BE INSPECTED AND APPROVED BY THE GEOTECHNICAL ENGINEER OR ENGINEER BEFORE PLACING OF ANY CONCRETE FOUNDATION, BLINDING, WATERPROOFING OR GEOFABRIC MEMBRANE.
   b. LEVELS OF BASES AS SHOWN ARE PRELIMINARY AND HAVE TO BE CONFIRMED BY THE GEOTECHNICAL ENGINEER OR ENGINEER ON SITE TO OBTAIN THE SPECIFIED BEARING PRESSURE. WHERE EXCAVATION LEVELS HAVE TO BE LOWERED, THE TOP LEVEL OF THE BASE SHOULD BE KEPT AS SHOWN AND THE BLINDING LAYER THICKENED. SIZE AND REINFORCING MAY BE ALTERED BY THE ENGINEER IF REQUIRED.
   c. NO FOUNDATION SHALL BE CAST ON EITHER NON-ENGINEERED FILL OR BACKFILL MATERIAL. PORTIONS THAT ARE OVER-EXCAVATED BEYOND THE DEPTH REQUIRED BY THE GEOTECHNICAL ENGINEER, TO BE FILLED WITH MASS CONCRETE (15MPa/38mm) AT CONTRACTOR'S EXPENSE.
   d. A 50mm THICK BLINDING LAYER OF 15 MPa/19mm SHALL BE CAST UNDER ALL REINFORCED FOUNDATIONS.
   e. ALL FOUNDATIONS ARE PLACED SYMMETRICALLY BELOW COLUMNS AND BRICKWORK U.N.O.
   f. NO BACKFILLING BEHIND RETAINING WALLS IS TO BE DONE BEFORE THE ENGINEER GIVES WRITTEN APPROVAL. WHERE APPLICABLE, BACKFILLING SHALL BE DONE SIMULTANEOUSLY ON BOTH SIDES OF WALLS TO MINIMIZE THE RELATIVE HEIGHT DIFFERENCE IN SOIL LEVELS.
   g. MANUAL COMPACTION OF SOIL IS TO TAKE PLACE WITHIN 500mm OF WALLS.

CONCRETE NOTES:

1. CONCRETE STRENGTH AT 28 DAYS SHALL BE:

BLINDING	-	15 MPa / 19mm
MASS	-	15 MPa / 38mm
FOUNDATIONS	-	25 MPa / 26mm
GROUNDBEAMS	-	30 MPa / 19mm
COLUMNS	-	30 MPa / 19mm
WALLS	-	30 MPa / 19mm
CAVITY WALL INFILL	-	15 MPa / 19mm
BEAMS	-	30 MPa / 19mm
SLABS (SUSPENDED)	-	30 MPa / 19mm
SURFACE BEDS	-	30 MPa / 19mm
STAIRS	-	30 MPa / 19mm

2. NO CONCRETE SHALL BE POURED UNTIL THE EXCAVATION, BLINDING FORMWORK AND/OR REINFORCEMENT ETC. HAS BEEN INSPECTED AND APPROVED IN WRITING BY THE ENGINEER. ENGINEER TO BE GIVEN A MINIMUM OF 48-HOURS NOTICE OF SUCH AN I NSPECTION.
3. THE CONTRACTOR MUST CO-ORDINATE ALL SERVICES DRAWINGS FOR DETAILS AND POSITIONS OF OPENINGS AND SLEEVES REQUIRED FOR STORMWATER, SEWERAGE, DRAINAGE, ELECTRICAL, MECHANICAL AND OTHER SERVICES. DISCREPANCIES TO BE BROUGHT TO THE ATTENTION OF ENGINEER AND OTHER RELEVANT PARTIES.
4. THE CONTRACTOR MUST OBTAIN PERMISSION FROM THE ENGINEER BEFORE ANY OPENINGS OR SERVICES, WHICH ARE NOT INDICATED ON THE DRAWINGS, MAY BE INTRODUCED THROUGHOUT ANY STRUCTURAL ELEMENT OR CLOSE TO ANY COLUMN.
5. CURING OF CONCRETE SHALL BE CARRIED OUT STRICTLY IN ACCORDANCE WITH SANS 1200 G CLAUSE 5.5.8. THE CONTRACTOR TO PROVIDE A METHOD STATEMENT, TO BE APPROVED BY ENGINEER. FOR THE CURING PROCEDURES OF THE VARIOUS ELEMENTS CONCERNED BUT ALL SURFACES TO BE KEPT CONTINUOUSLY DAMP FOR AT LEAST 7 DAYS AFTER CASTING. CONCRETE SLABS TO BE COVERED WITH MOIST SAND OR COVERED WITH PLASTIC MEMBRANE DURING THIS PERIOD. CONCRETE COLUMNS TO BE WRAPPED IN A PLASTIC MEMBRANE DURING THIS PERIOD.
6. STRIPPING TIMES OF SHUTTERING AND PROPPING SHALL BE IN ACCORDANCE WITH SANS 1200 G CLAUSES 5.2.5 AND TABLE 2 AS REPRODUCED IN THE STRUCTURAL NOTES AND SPECIFICATIONS.
7. PROPPING MAY ONLY BE REMOVED ONCE A SUSPENDED SLABS OR BEAMS HAVE OBTAINED THEIR 28 DAY STRENGTH, U.N.O. ALL SUSPENDED SLABS AND BEAMS TO BE BACK-PROPPED FOR TWO (2) COMPLETED LEVELS BELOW THE PROPPED LEVEL OF THE RELEVANT BEAM OR SLAB.
8. DOWNSTAND AND UPSTAND BEAM DIMENSIONS ARE GIVEN AS
   A x B WHERE:
   A = WIDTH OF BEAM
   B = TOTAL DEPTH OF BEAM INCLUDING SLAB THICKNESS
9. CONCRETE POURED IN EXCESS OF THREE METERS HIGH WILL NOT BE ACCEPTED WITHOUT PRIOR WRITTEN APPROVAL OF THE ENGINEER.
10. ALL COLUMNS ARE PLACED SYMMETRICALLY ON GRID LINES U.N.O.
11. 20x20mm CHAMFERS TO ALL VISIBLE EDGES U.N.O.
12. 100mm KICKERS FOR COLUMNS AND WALLS HAVE BEEN ALLOWED FOR IN THE REINFORCING LENGTHS. THEY SHALL BE CAST WITH THE SAME STRENGTH AS THE CONCRETE ELEMENTS BELOW THEM AND THOROUGHLY COMPACTED AND CURED.
13. 2 LAYERS MALTHOID UNDER SLAB & ON TOP OF MASONRY INTERFACE.

SURFACE BED NOTES:

1. DAMPPROOFING MEMBRANE TO BE INSTALLED UNDER SURFACE BEDS ACCORDING TO SANS 952.
2. FINISHES: TO BE DONE TO ARCHITECT'S SPEC
3. ABBREVIATIONS:
   - IJ - ISOLATION JOINT
   - SJ - SAW CUT JOINT
   - EJ - EXPANSION JOINT
   - CJ - CONSTRUCTION JOINT
   - KCJ - KEYED CONSTRUCTION JOINT
4. PROVIDE 10mm IJ AROUND ALL CONCRETE COLUMNS, STEEL COLUMNS AND AGAINST BRICK AND CONCRETE WALLS. AFTER CONCRETE HAS SET, JOINTEX TO BE RAKED OUT 10mm DEEP AND SEALED WITH APPROVED JOINT SEALANT.
5. REFER TO DETAILS FOR IJ, SJ, EJ AND CJ.
6. METHOD STATEMENT FOR POURING OF SURFACE BED PANELS TO BE APPROVED BY THE ENGINEER.
7. SAW-CUT JOINTS SHALL BE DONE AS SOON AS CONCRETE IS FIRM ENOUGH NOT TO DAMAGE THE EDGES, USUALLY BETWEEN 6-16 HOURS, BUT NOT LATER THAN 48 HOURS. JOINTS TO BE REPEATED IN FINISHED SURFACES.
8. JOINTS TO OVERLAP 200mm AND EFFECTIVELY SEALED OR TAPED.
9. PENETRATION BY PIPES, PLUMBING FITTINGS ETC. AND PUNCTURES SHALL BE TAPED WITH A PRESSURE SENSITIVE ADHESIVE TAPE.

BRICKWORK & BLOCKWORK NOTES:

1. ALL BRICKWORK / BLOCKWORK SHOWN ON ENGINEER'S DRAWINGS ARE LOAD BEARING U.N.O. OR SHOWN FOR CLARITY PURPOSES.
2. ALL LOADBEARING, HOLLOW BLOCK WORK TO BE FILLED WITH GRADE 15 MPA/19MM MASS CONCRETE.
3. ALL SETTING OUT OF BRICKWORK / BLOCKWORK TO BE DONE FROM ARCHITECT'S DRAWINGS.
4. REFER TO THE ARCHITECTS DRAWINGS FOR GENERAL LAYOUT OF BRICKWORK OR BLOCKWORK AND CONTROL JOINTS IN BRICKWORK OR BLOCKWORK.
5. THE MINIMUM CRUSHING STRENGTH OF ALL LOADBEARING BRICKWORK/ BLOCKWORK SHALL BE 14MPA U.N.O. AND NON- LOADBEARING BRICKWORK/BLOCKWORK 7MPA U.N.O. THE MINIMUM CRUSHING STRENGTH OF MORTAR SHALL BE AS FOR CLASS II MORTAR IN ACCORDANCE WITH TABLE 1 SABS 0164 UNLESS INDICATED OTHERWISE ON DRAWINGS.
7. BRICKFORCE:
7.1 ALL BRICK FORCE SHALL BE GALVANIZED.
7.2 LOAD BEARING BRICKWORK SHALL BE REINFORCED WITH AN APPROVED BRICKFORCE EVERY SECOND LAYER AND NON-LOADBEARING BRICKWORK EVERY FOURTH LAYER U.N.O.
7.3 LOAD BEARING BLOCKWORK SHALL BE REINFORCED WITH APPROVED BRICKFORCE EVERY LAYER AND NON-LOADBEARING BLOCK WORK EVERY SECOND LAYER U.N.O.
7.2 IN ADDITION, CONTINUOUS BRICKFORCE IS REQUIRED IN EVERY LAYER FOR THE FIRST FOUR LAYERS ABOVE AND BELOW THE TOP OF FOUNDATIONS & SLABS, OVER WINDOWS AND DOOR OPENINGS, EXTENDING AT LEAST 1m BEYOND BOTH SIDES OF THE OPENING. MINIMUM LAPS TO BE 300mm. OUTSIDE WIRE OF BRICKFORCE TO BE CONTINUOUS AT CORNERS.
8. NON-LOAD BEARING BRICKWORK/BLOCKWORK MAY NOT BE BUILT CLOSER THAN 10mm FROM THE SOFFITS AND SIDES OF BEAMS AND SLABS U.N.O AND ONLY AFTER ALL PROPS HAVE BEEN REMOVED. REFER TO STANDARD DETAILS.
9. WHERE BRICKWORK/BLOCKWORK AND CONCRETE JOIN, V-JOINTS ARE TO BE MADE THROUGH THE TOTAL THICKNESS OF THE PLASTERWORK.
10 LOADBEARING BRICKWORK OVER SLABS IS TO BE COMPLETED BEFORE THE NON-LOADBEARING BRICKWORK UNDER SLABS.
11. PLACE 2 LAYERS OF 3-PLY MALTHOID BETWEEN SLAB SOFFITS AND LOAD BEARING BRICKWORK OR BLOCKWORK.
12. ALL BRICKWORK SHALL BE FIXED TO CONCRETE & STEEL COLUMNS BY MEANS OF HOOP IRON EVERY FOURTH COURSE AND BLOCKWORK EVERY SECOND COURSE.
13. IN CAVITY WALLS, WALL TIES SHALL JOIN THE LEAVES AND SHALL BE EMBEDDED IN MASONRY JOINTS AT RIGHT ANGLES TO THE LEAVES AS THE WORK PROGRESSES.
14. THE NUMBER OF WALL TIES PER m² OF WALLING SHALL BE:
15.1 75mm > CAVITY - 3.7 TIES/m²
15.2 75mm < CAVITY < 100mm - 4.5 TIES/m²
15.3 100mm < CAVITY < 150mm - 5.0 TIES/m²
16. ENSURE THAT EACH TIE IS EMBEDDED TO A DEPTH OF AT LEAST 50mm IN THE MORTAR JOINT OF EACH LEAF.
17. CLAY BRICKS TO BE WETTED BEFORE BEING USED BUT CONCRETE BRICKS AND BLOCKS TO BE KEPT DRY BEFORE BEING USED.
18. ALL CHASES SHALL BE VERTICAL AND SHALL NOT BE GREATER THAN 25mm DEEP BY 40mm WIDE. A MAXIMUM OF 750mm LONG HORIZONTAL CHASE WILL BE ACCEPTED. NO DIAGONAL CHASES WILL BE ACCEPTED.
19. ALL CLAY BRICKS FOR GENERAL BUILDING WORK BELOW DAMP-PROOF COURSE OR UNDER DAMP CONDITIONS OR BELOW GROUND LEVEL, PLASTERED OR UN-PLASTERED, SHALL BE 14MPa NFX (NON-FACING EXTRA) BRICKS.

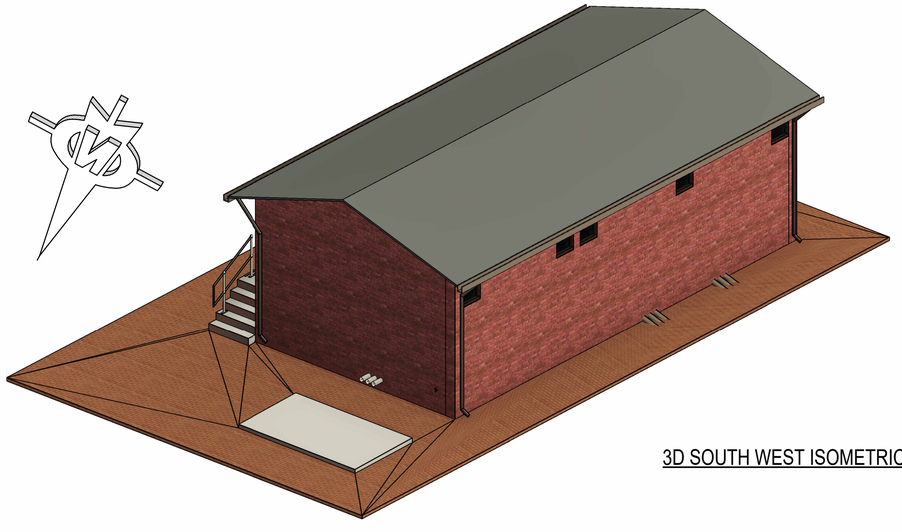

3D SOUTH WEST ISOMETRIC VIEW

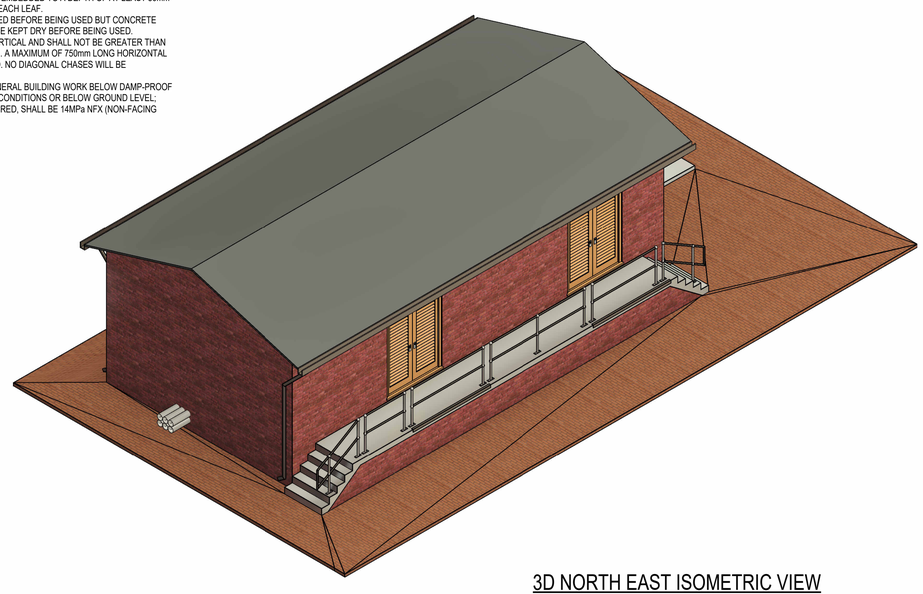

3D NORTH EAST ISOMETRIC VIEW

NOTES/LEGEND	APPROVED BY COUNCIL / CLIENT	CLIENT
	CITY ENGINEER / CLIENT — REG. NO. — DATE	STELLENBOSCH STELLENBOSCH • PNIEL • FRANSCHHOEK

AMENDMENTS CODE

A,B,C.../ : BEFORE TENDER
T0 / : TENDER DRAWING
0,1,2.../ : AFTER TENDER
Z / : AS BUILT

/A : BY CLIENT
/B : BY ARCHITECT
/C : BY MECHANICAL OR ELECTRICAL
/D : BY BVi
/E : BY OTHER ( )

DATE	INITIAL	No./CODE	REVISION DESCRIPTION
XX/10/2026	D.L	T1	DRAWINGS ISSUED FOR TENDER

COPYRIGHT VESTS IN THIS DOCUMENT AND NO USE OR REPRODUCTION OR DUPLICATION THEREOF MAY OCCUR WITHOUT THE WRITTEN CONSENT OF BVI CONSULTING ENGINEERS

CESA Consulting Engineers South Africa
bvi 50 YEARS EST 1967
• ENGINEERING • PROCUREMENT • MANAGEMENT
Registration no. 1998/000157/07

PROVINCE	OFFICE	☎	E-MAIL
Gauteng	Tshwane	(012) 940-1111	pta@bvigp.co.za
	Polokwane	(015) 291-5400	plk@bvilp.co.za
Free State	Bloemfontein	(051) 447-2137	bfn@bvifs.co.za
	Welkom	(057) 353-3499	wel@bvifs.co.za
Northern Cape	Upington	(054) 337-6600	upt@bvinc.co.za
	Springbok	(027) 712-8990	spk@bvinc.co.za
KwaZulu Natal	Durban	(031) 266-8382	dbn@bvikn.co.za
	Empangeni	(035) 772-6112	emp@bvikn.co.za
Eastern Cape	Port Elizabeth	(041) 373-4343	pe@bviec.co.za
	East London	(043) 726-1444	pe@bviec.co.za
Western Cape	Cape Town	(021) 527-7000	cpt@bviwc.co.za

Visit or contact us online at www.bvigroup.co.za

PROJECT	APPROVED BY BVi
SWITCHING & SUBSTATION BUILDING ALEXANDER STR. STELLENBOSCH	ENGINEER/TECHNOLOGIST — 980354 REG. NO. — XX/10/2026 DATE
DRAWING TITLE: GENERAL NOTES	SCALE: 1 : 1 @ A1 — DRAWN: D.LOGIE — DESIGNED: C.PADAYACHEE — CHECKED: W.BRAND
PROJECT STATUS: ISSUED FOR TENDER	PLAN NUMBER: 34092.02-200-01 — REV. NO.: T1

0 10 50 100

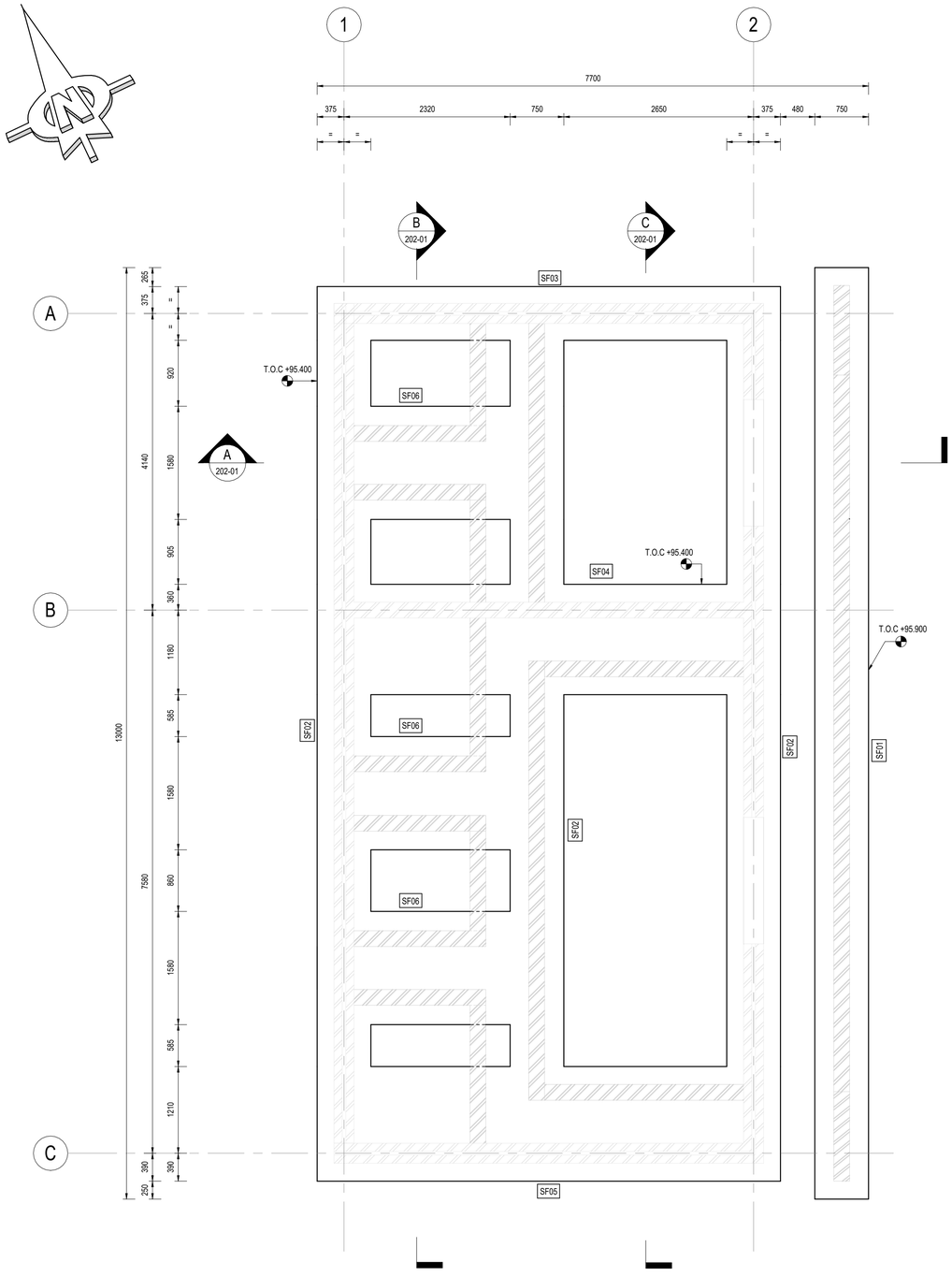

FOUNDATION LAYOUT

SCALE 1 : 40

NOTE:
GRATING OF TRENCH OMMITTED FOR CLARITY

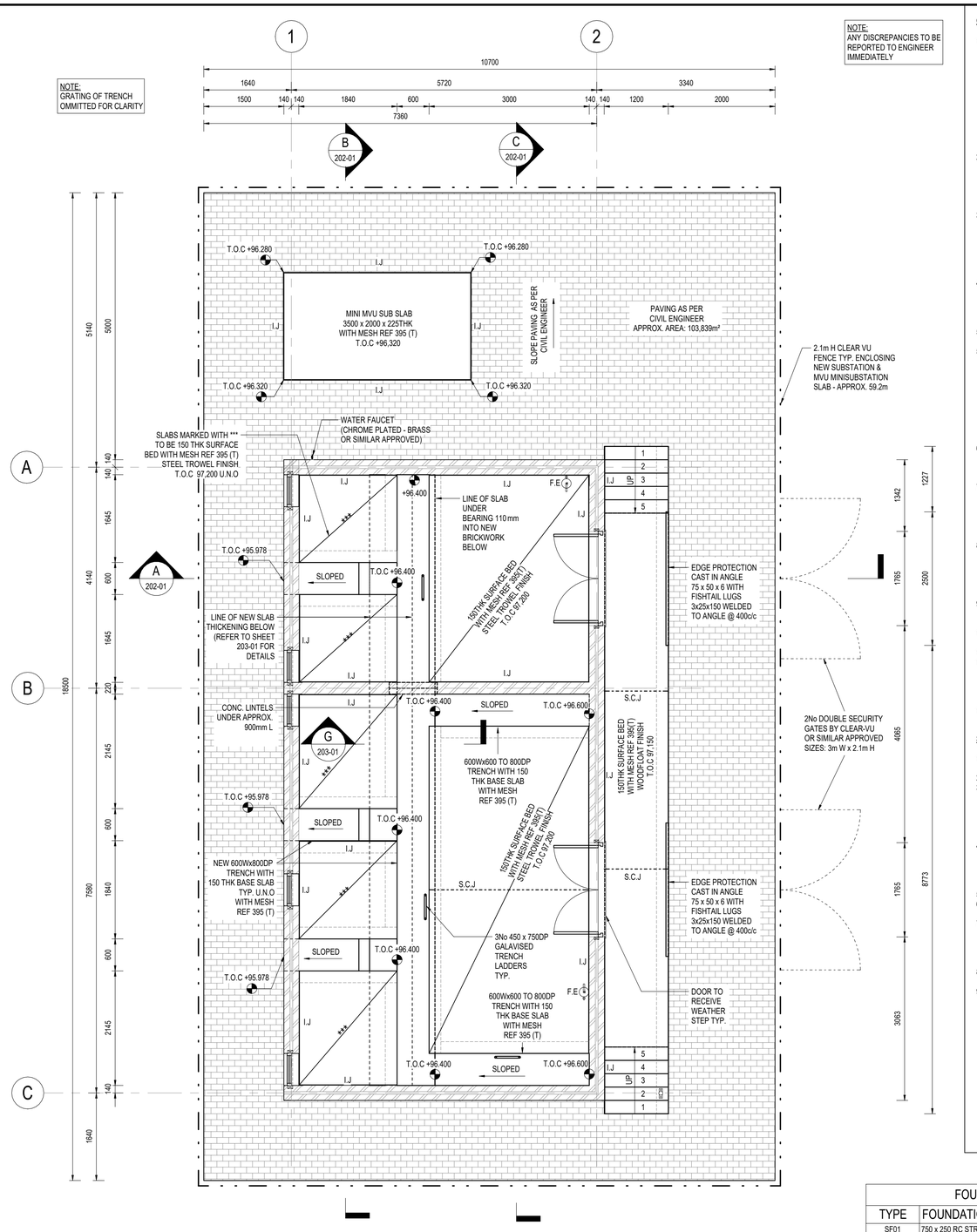

SURFACE BED LAYOUT

SCALE 1 : 50

NOTE:
ANY DISCREPANCIES TO BE REPORTED TO ENGINEER IMMEDIATELY

CONCRETE NOTES:

1. CONCRETE STRENGTH AT 28 DAYS SHALL BE:

BLINDING	-	15 MPa / 19mm
MASS	-	15 MPa / 38mm
FOUNDATIONS	-	25 MPa / 26mm
GROUNDBEAMS	-	30 MPa / 19mm
COLUMNS	-	30 MPa / 19mm
WALLS	-	30 MPa / 19mm
CAVITY WALL INFILL	-	15 MPa / 19mm
BEAMS	-	30 MPa / 19mm
SLABS (SUSPENDED)	-	30 MPa / 19mm
SURFACE BEDS	-	30 MPa / 19mm
STAIRS	-	30 MPa / 19mm

2. NO CONCRETE SHALL BE POURED UNTIL THE EXCAVATION, BLINDING FORMWORK AND/OR REINFORCEMENT ETC. HAS BEEN INSPECTED AND APPROVED IN WRITING BY THE ENGINEER. ENGINEER TO BE GIVEN A MINIMUM OF 48-HOURS NOTICE OF SUCH AN I NSPECTION.
3. THE CONTRACTOR MUST CO-ORDINATE ALL SERVICES DRAWINGS FOR DETAILS AND POSITIONS OF OPENINGS AND SLEEVES REQUIRED FOR STORMWATER. SEWERAGE. DRAINAGE. ELECTRICAL. MECHANICAL AND OTHER SERVICES. DISCREPANCIES TO BE BROUGHT TO THE ATTENTION OF ENGINEER AND OTHER RELEVANT PARTIES.
4. THE CONTRACTOR MUST OBTAIN PERMISSION FROM THE ENGINEER BEFORE ANY OPENINGS OR SERVICES, WHICH ARE NOT INDICATED ON THE DRAWINGS, MAY BE INTRODUCED THROUGHOUT ANY STRUCTURAL ELEMENT OR CLOSE TO ANY COLUMN.
5. CURING OF CONCRETE SHALL BE CARRIED OUT STRICTLY IN ACCORDANCE WITH SANS 1200 G CLAUSE
- 5.1 THE CONTRACTOR TO PROVIDE A METHOD STATEMENT, TO BE APPROVED BY ENGINEER, FOR THE CURING PROCEDURES OF THE VARIOUS ELEMENTS CONCERNED BUT ALL SURFACES TO BE KEPT CONTINUOUSLY DAMP FOR AT LEAST 7 DAYS AFTER CASTING. CONCRETE SLABS TO BE COVERED WITH MOIST SAND OR COVERED WITH PLASTIC MEMBRANE DURING THIS PERIOD. CONCRETE COLUMNS TO BE WRAPPED IN A PLASTIC MEMBRANE DURING THIS PERIOD.
6. STRIPPING TIMES OF SHUTTERING AND PROPPING SHALL BE IN ACCORDANCE WITH SANS 1200 G CLAUSES 5.2.5 AND TABLE 2 AS REPRODUCED IN THE STRUCTURAL NOTES AND SPECIFICATIONS.
7. PROPPING MAY ONLY BE REMOVED ONCE A SUSPENDED SLABS OR BEAMS HAVE OBTAINED THEIR 28 DAY STRENGTH, U.N.O. ALL SUSPENDED SLABS AND BEAMS TO BE BACK-PROPPED FOR TWO (2) COMPLETED LEVELS BELOW THE PROPPED LEVEL OF THE RELEVANT BEAM OR SLAB.
8. DOWNSTAND AND UPSTAND BEAM DIMENSIONS ARE GIVEN AS
   A x B WHERE:
   A = WIDTH OF BEAM
   B = TOTAL DEPTH OF BEAM INCLUDING SLAB THICKNESS
9. CONCRETE POURED IN EXCESS OF THREE METERS HIGH WILL NOT BE ACCEPTED WITHOUT PRIOR WRITTEN APPROVAL OF THE ENGINEER.
10. ALL COLUMNS ARE PLACED SYMMETRICALLY ON GRID LINES U.N.O.
11. 20x20mm CHAMFERS TO ALL VISIBLE EDGES U.N.O.
12. 100mm KICKERS FOR COLUMNS AND WALLS HAVE BEEN ALLOWED FOR IN THE REINFORCING LENGTHS. THEY SHALL BE CAST WITH THE SAME STRENGTH AS THE CONCRETE ELEMENTS BELOW THEM AND THOROUGHLY COMPACTED AND CURED.
13. 2 LAYERS MALTHOID UNDER SLAB & ON TOP OF MASONRY INTERFACE.

SURFACE BED NOTES:

1. DAMPPROOFING MEMBRANE TO BE INSTALLED UNDER SURFACE BEDS ACCORDING TO SANS 952.
2. FINISHES: TO BE DONE TO ARCHITECT'S SPEC
3. ABBREVIATIONS:
   - IJ - ISOLATION JOINT
   - SJ - SAW CUT JOINT
   - EJ - EXPANSION JOINT
   - CJ - CONSTRUCTION JOINT
   - KCJ - KEYED CONSTRUCTION JOINT
4. PROVIDE 10mm IJ AROUND ALL CONCRETE COLUMNS, STEEL COLUMNS AND AGAINST BRICK AND CONCRETE WALLS. AFTER CONCRETE HAS SET, JOINTEX TO BE RAKED OUT 10mm DEEP AND SEALED WITH APPROVED JOINT SEALANT.
5. REFER TO DETAILS FOR IJ, SJ, EJ AND CJ.
6. METHOD STATEMENT FOR POURING OF SURFACE BED PANELS TO BE APPROVED BY THE ENGINEER.
7. SAW-CUT JOINTS SHALL BE DONE AS SOON AS CONCRETE IS FIRM ENOUGH NOT TO DAMAGE THE EDGES, USUALLY BETWEEN 6-16 HOURS, BUT NOT LATER THAN 48 HOURS. JOINTS TO BE REPEATED IN FINISHED SURFACES.
8. JOINTS TO OVERLAP 200mm AND EFFECTIVELY SEALED OR TAPED.
9. PENETRATION BY PIPES, PLUMBING FITTINGS ETC. AND PUNCTURES SHALL BE TAPED WITH A PRESSURE SENSITIVE ADHESIVE TAPE.

FOUNDATION SCHEDULE

TYPE	FOUNDATION SIZE	T.O.C.	No OFF
SF01	750 x 250 RC STRIP FOOTING	95.900 m	1
SF02	750 x 250 RC STRIP FOOTING	95.400 m	3
SF03	750 x 250 RC STRIP FOOTING	95.400 m	1
SF04	1540 x 250 RC STRIP FOOTING	95.400 m	1
SF05	1600 x 250 RC STRIP FOOTING	95.400 m	1
SF06	750 x 250 RC STRIP FOOTING	95.400 m	3

NOTES/LEGEND

APPROVED BY COUNCIL / CLIENT

CITY ENGINEER / CLIENT | REG. NO. | DATE

AMENDMENTS CODE

A,B,C.../ : BEFORE TENDER
T0 / : TENDER DRAWING
0,1,2.../ : AFTER TENDER
Z / : AS BUILT

/A : BY CLIENT
/B : BY ARCHITECT
/C : BY MECHANICAL OR ELECTRICAL
/D : BY BVi
/E : BY OTHER ( )

DATE	INITIAL	No./CODE	REVISION DESCRIPTION
XX/10/2026	D.L	T1	DRAWINGS ISSUED FOR TENDER

COPYRIGHT VESTS IN THIS DOCUMENT AND NO USE OR REPRODUCTION OR DUPLICATION THEREOF MAY OCCUR WITHOUT THE WRITTEN CONSENT OF BVi CONSULTING ENGINEERS

CLIENT

STELLENBOSCH
STELLENBOSCH • PNIEL • FRANSCHHOEK

CESA Consulting Engineers South Africa
BVi 50 YEARS EST 1967
• ENGINEERING • PROCUREMENT • MANAGEMENT
Registration no. 1998/000157/07

PROVINCE	OFFICE		E-MAIL
Gauteng	Tshwane	(012) 940-1111	pta@bvigc.co.za
	Polokwane	(015) 291-5400	plk@bvi.co.za
Free State	Bloemfontein	(051) 447-2127	bfn@bvifs.co.za
	Welkom	(057) 353-2499	wel@bvifs.co.za
Northern Cape	Upington	(054) 337-6800	upt@bvinc.co.za
	Springbok	(027) 712-8090	spb@bvinc.co.za
KwaZulu Natal	Durban	(031) 266-8382	dbn@bvikn.co.za
	Empangeni	(035) 772-0112	emp@bvikn.co.za
Eastern Cape	Port Elizabeth	(041) 373-4343	pe@bvisc.co.za
	East London	(043) 726-1444	pe@bvisc.co.za
Western Cape	Cape Town	(021) 527-7000	cpt@bvisc.co.za

Visit or contact us online at www.bvigroup.co.za

PROJECT

SWITCHING & SUBSTATION BUILDING
ALEXANDER STR. STELLENBOSCH

DRAWING TITLE

FOUNDATION & SURFACE BED LAYOUT

PROJECT STATUS

ISSUED FOR TENDER

APPROVED BY BVi

ENGINEER/TECHNOLOGIST | 980354 REG. NO. | XX/10/2026 DATE

SCALE	As indicated @ A1	DRAWN	D.LOGIE
DESIGNED	C.PADAYACHEE	CHECKED	W.BRAND

PLAN NUMBER	REV. NO.
34092.02-201-01	T1

0 10 50 100

O:\Projects Drawings\34000 - 34999\34092.00\Structural\Design Drawings\Revit Model\34092.02-STR-Stellenbosch Electrical Switching Substation (RVT2026).rvt

NOTE:
ANY DISCREPANCIES TO BE REPORTED TO ENGINEER IMMEDIATELY

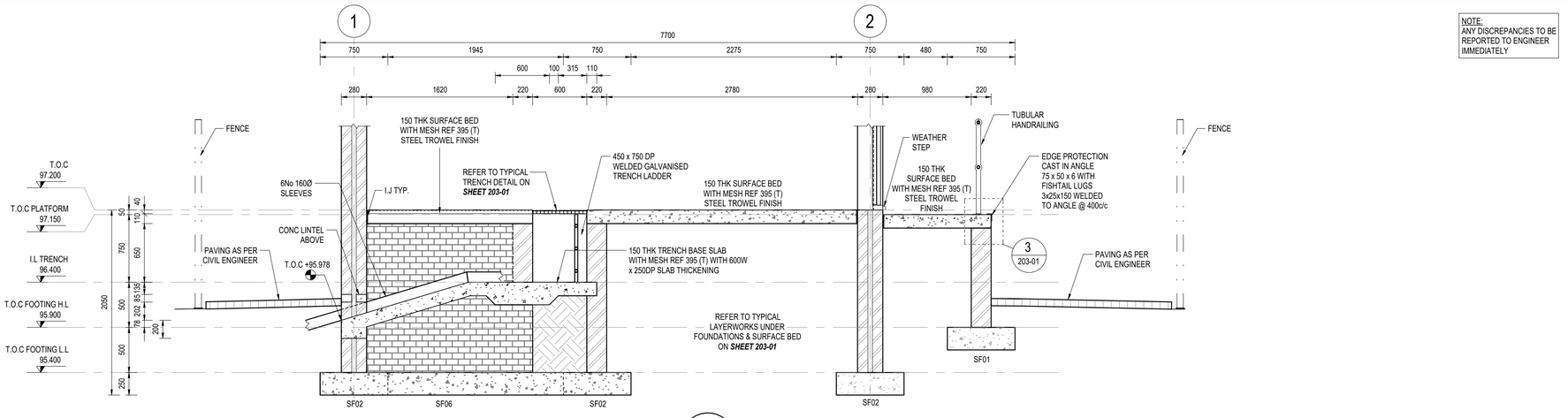

SECTION A

A
202-01

SCALE 1 : 30

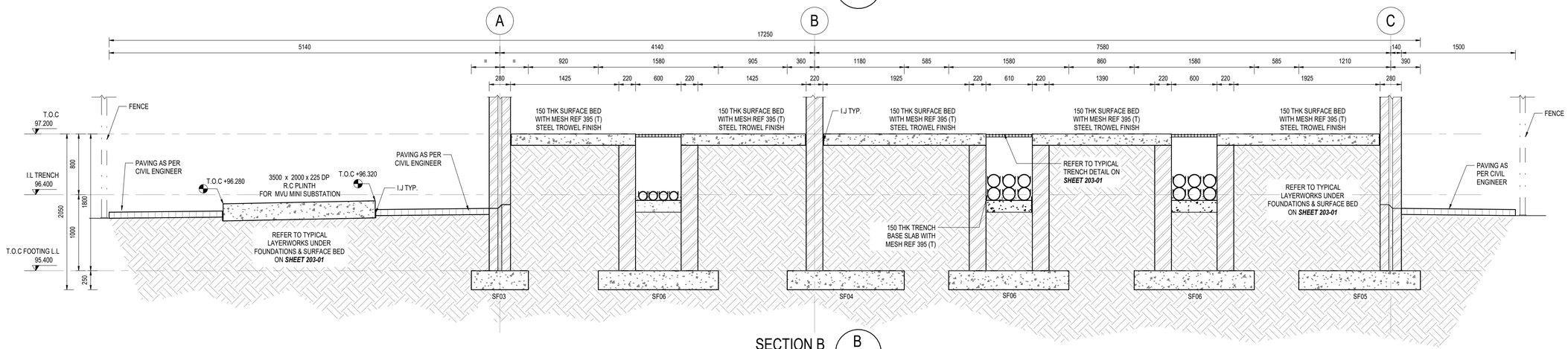

SECTION B

B
202-01

SCALE 1 : 30

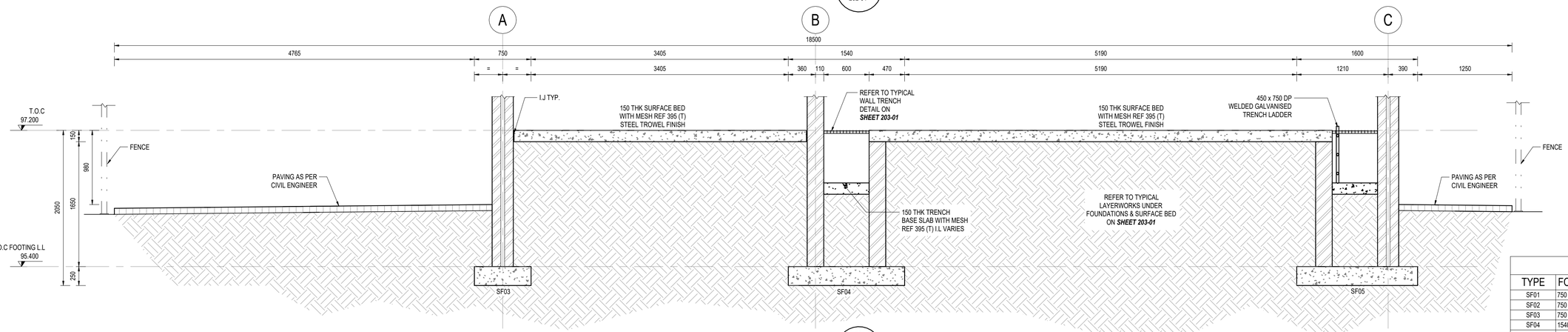

SECTION C

C
202-01

SCALE 1 : 30

CONCRETE NOTES:

1. CONCRETE STRENGTH AT 28 DAYS SHALL BE:
   - BLINDING - 15 MPa / 19mm
   - MASS - 15 MPa / 38mm
   - FOUNDATIONS - 25 MPa / 26mm
   - GROUNDBEAMS - 30 MPa / 19mm
   - COLUMNS - 30 MPa / 19mm
   - WALLS - 30 MPa / 19mm
   - CAVITY WALL INFILL - 15 MPa / 19mm
   - BEAMS - 30 MPa / 19mm
   - SLABS (SUSPENDED) - 30 MPa / 19mm
   - SURFACE BEDS - 30 MPa / 19mm
   - STAIRS - 30 MPa / 19mm
2. NO CONCRETE SHALL BE POURED UNTIL THE EXCAVATION, BLINDING FORMWORK AND/OR REINFORCEMENT ETC. HAS BEEN INSPECTED AND APPROVED IN WRITING BY THE ENGINEER. ENGINEER TO BE GIVEN A MINIMUM OF 48-HOURS NOTICE OF SUCH AN I NSPECTION.
3. THE CONTRACTOR MUST CO-ORDINATE ALL SERVICES DRAWINGS FOR DETAILS AND POSITIONS OF OPENINGS AND SLEEVES REQUIRED FOR STORMWATER, SEWERAGE, DRAINAGE, ELECTRICAL, MECHANICAL AND OTHER SERVICES. DISCREPANCIES TO BE BROUGHT TO THE ATTENTION OF ENGINEER AND OTHER RELEVANT PARTIES.
4. THE CONTRACTOR MUST OBTAIN PERMISSION FROM THE ENGINEER BEFORE ANY OPENINGS OR SERVICES, WHICH ARE NOT INDICATED ON THE DRAWINGS, MAY BE INTRODUCED THROUGHOUT ANY STRUCTURAL ELEMENT OR CLOSE TO ANY COLUMN.
5. CURING OF CONCRETE SHALL BE CARRIED OUT STRICTLY IN ACCORDANCE WITH SANS 1200 G CLAUSE
5.1 THE CONTRACTOR TO PROVIDE A METHOD STATEMENT, TO BE APPROVED BY ENGINEER, FOR THE CURING PROCEDURES OF THE VARIOUS ELEMENTS CONCERNED BUT ALL SURFACES TO BE KEPT CONTINUOUSLY DAMP FOR AT LEAST 7 DAYS AFTER CASTING. CONCRETE SLABS TO BE COVERED WITH MOIST SAND OR COVERED WITH PLASTIC MEMBRANE DURING THIS PERIOD. CONCRETE COLUMNS TO BE WRAPPED IN A PLASTIC MEMBRANE DURING THIS PERIOD.
6. STRIPPING TIMES OF SHUTTERING AND PROPPING SHALL BE IN ACCORDANCE WITH SANS 1200 G CLAUSES 5.2.5 AND TABLE 2 AS REPRODUCED IN THE STRUCTURAL NOTES AND SPECIFICATIONS.
7. PROPPING MAY ONLY BE REMOVED ONCE A SUSPENDED SLABS OR BEAMS HAVE OBTAINED THEIR 28 DAY STRENGTH, U.N.O. ALL SUSPENDED SLABS AND BEAMS TO BE BACK-PROPPED FOR TWO (2) COMPLETED LEVELS BELOW THE PROPPED LEVEL OF THE RELEVANT BEAM OR SLAB.
8. DOWNSTAND AND UPSTAND BEAM DIMENSIONS ARE GIVEN AS
   A x B WHERE:
   A = WIDTH OF BEAM
   B = TOTAL DEPTH OF BEAM INCLUDING SLAB THICKNESS
9. CONCRETE POURED IN EXCESS OF THREE METERS HIGH WILL NOT BE ACCEPTED WITHOUT PRIOR WRITTEN APPROVAL OF THE ENGINEER.
10. ALL COLUMNS ARE PLACED SYMMETRICALLY ON GRID LINES U.N.O.
11. 20x20mm CHAMFERS TO ALL VISIBLE EDGES U.N.O.
12. 100mm KICKERS FOR COLUMNS AND WALLS HAVE BEEN ALLOWED FOR IN THE REINFORCING LENGTHS. THEY SHALL BE CAST WITH THE SAME STRENGTH AS THE CONCRETE ELEMENTS BELOW THEM AND THOROUGHLY COMPACTED AND CURED.
13. 2 LAYERS MALTHOID UNDER SLAB & ON TOP OF MASONRY INTERFACE.

SURFACE BED NOTES:

1. DAMPPROOFING MEMBRANE TO BE INSTALLED UNDER SURFACE BEDS ACCORDING TO SANS 952
2. FINISHES: TO BE DONE TO ARCHITECT'S SPEC
3. ABBREVIATIONS:
   - IJ - ISOLATION JOINT
   - SJ - SAW CUT JOINT
   - EJ - EXPANSION JOINT
   - CJ - CONSTRUCTION JOINT
   - KCJ - KEYED CONSTRUCTION JOINT
4. PROVIDE 10mm IJ AROUND ALL CONCRETE COLUMNS, STEEL COLUMNS AND AGAINST BRICK AND CONCRETE WALLS. AFTER CONCRETE HAS SET, JOINTEX TO BE RAKED OUT 10mm DEEP AND SEALED WITH APPROVED JOINT SEALANT.
5. REFER TO DETAILS FOR IJ, SJ, EJ AND CJ.
6. METHOD STATEMENT FOR POURING OF SURFACE BED PANELS TO BE APPROVED BY THE ENGINEER.
7. SAW-CUT JOINTS SHALL BE DONE AS SOON AS CONCRETE IS FIRM ENOUGH NOT TO DAMAGE THE EDGES, USUALLY BETWEEN 6-16 HOURS, BUT NOT LATER THAN 48 HOURS. JOINTS TO BE REPEATED IN FINISHED SURFACES.
8. JOINTS TO OVERLAP 200mm AND EFFECTIVELY SEALED OR TAPED.
9. PENETRATION BY PIPES, PLUMBING FITTINGS ETC. AND PUNCTURES SHALL BE TAPED WITH A PRESSURE SENSITIVE ADHESIVE TAPE.

FOUNDATION SCHEDULE

TYPE	FOUNDATION SIZE	T.O.C.	No OFF
SF01	750 x 250 RC STRIP FOOTING	95.900 m	1
SF02	750 x 250 RC STRIP FOOTING	95.400 m	3
SF03	750 x 250 RC STRIP FOOTING	95.400 m	1
SF04	1540 x 250 RC STRIP FOOTING	95.400 m	1
SF05	1600 x 250 RC STRIP FOOTING	95.400 m	1
SF06	750 x 250 RC STRIP FOOTING	95.400 m	3

NOTES/LEGEND

APPROVED BY COUNCIL / CLIENT

CITY ENGINEER / CLIENT REG. NO. DATE

AMENDMENTS CODE

A,B,C.../ : BEFORE TENDER
T0 / : TENDER DRAWING
0,1,2.../ : AFTER TENDER
Z / : AS BUILT

/A : BY CLIENT
/B : BY ARCHITECT
/C : BY MECHANICAL OR ELECTRICAL
/D : BY BVI
/E : BY OTHER ( )

DATE	INITIAL	No./CODE	REVISION DESCRIPTION
XX/10/2026	D.L	T1	DRAWINGS ISSUED FOR TENDER

COPYRIGHT VESTS IN THIS DOCUMENT AND NO USE OR REPRODUCTION OR DUPLICATION THEREOF MAY OCCUR WITHOUT THE WRITTEN CONSENT OF BVI CONSULTING ENGINEERS

CLIENT

STELLENBOSCH
STELLENBOSCH • PNIEL • FRANSCHHOEK

CESA Consulting Engineers South Africa
bvi 50 YEARS EST 1967
• ENGINEERING • PROCUREMENT • MANAGEMENT
Registration no. 1998/000157/07

PROVINCE	OFFICE		E-MAIL
Gauteng	Tshwane	(012) 940-1111	pta@bvigp.co.za
	Polokwane	(015) 291-5400	plk@bvlp.co.za
Free State	Bloemfontein	(051) 447-2137	bfn@bvfs.co.za
	Welkom	(057) 353-2499	wel@bvfs.co.za
Northern Cape	Upington	(054) 337-8000	upt@bvnc.co.za
	Springbok	(027) 712-8990	spk@bvnc.co.za
KwaZulu Natal	Durban	(031) 266-8382	dbn@bvkn.co.za
	Empangeni	(035) 772-6112	emp@bvkn.co.za
Eastern Cape	Port Elizabeth	(041) 373-4343	pe@bvlec.co.za
	East London	(043) 726-1444	pz@bvlec.co.za
Western Cape	Cape Town	(021) 527-7000	cpt@bvlwc.co.za

Visit or contact us online at www.bvigroup.co.za

PROJECT
SWITCHING & SUBSTATION BUILDING
ALEXANDER STR. STELLENBOSCH

DRAWING TITLE
CONCRETE SECTIONS

PROJECT STATUS
ISSUED FOR TENDER

APPROVED BY BVI

ENGINEER/TECHNOLOGIST 980354 REG. NO. XX/10/2026 DATE

SCALE	As indicated @ A1	DRAWN	D.LOGIE
DESIGNED	C.PADAYACHEE	CHECKED	W.BRAND

PLAN NUMBER	REV. NO.
34092.02-202-01	T1

0 10 50 100

O:\Projects Drawings\34000 - 34999\34092.00\Structural\Design Drawings\Revit Model\34092.02-STR-Stellenbosch Electrical Switching Substation (RVT2026).rvt

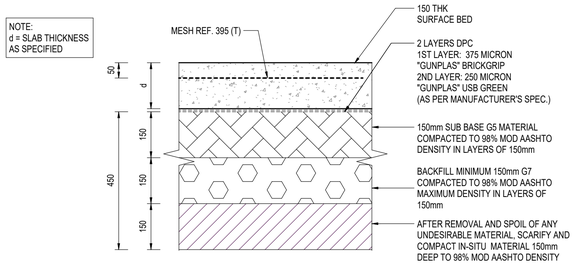

SURFACE BED LAYERWORKS

SCALE 1 : 10

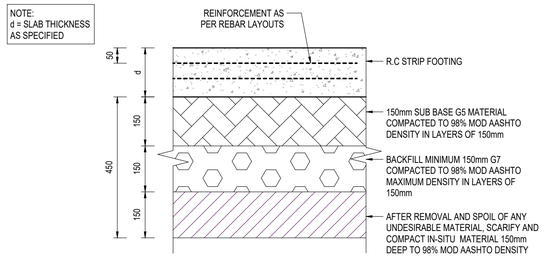

STRIP FOOTING LAYERWORKS

SCALE 1 : 10

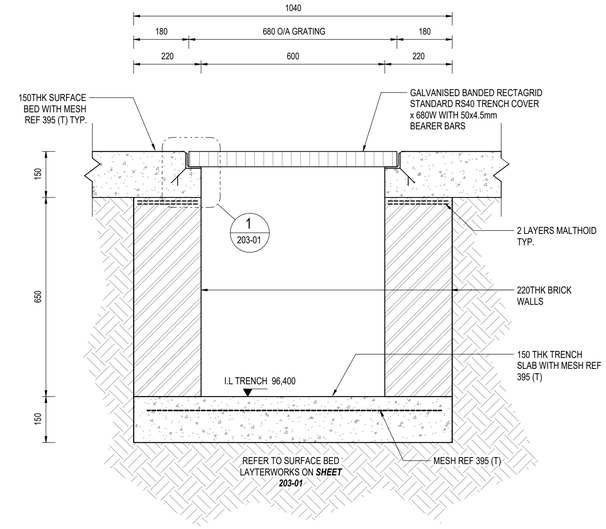

TYPICAL TRENCH DETAIL

SCALE 1 : 10

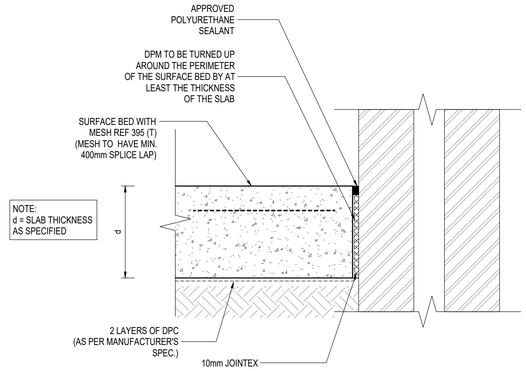

TYPICAL ISOLATION JOINT (IJ) DETAIL

SCALE 1 : 5

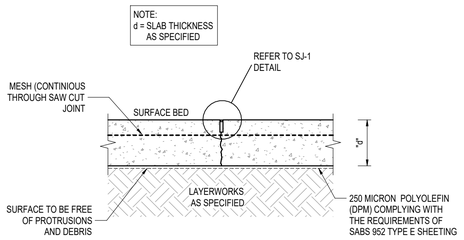

TYPICAL SAW CUT JOINT (SCJ)

SCALE 1 : 10

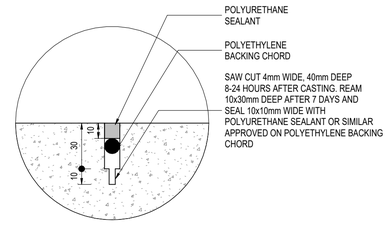

DETAIL SJ-1 - SAW CUT JOINT

SCALE 1 : 2

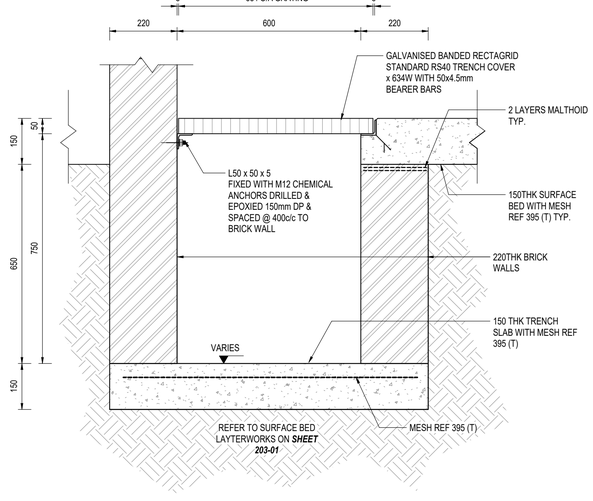

TYPICAL WALL TRENCH DETAIL

SCALE 1 : 10

NOTE:
ANY DISCREPANCIES TO BE REPORTED TO ENGINEER IMMEDIATELY

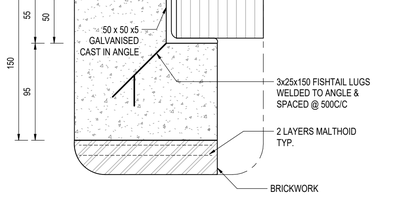

DETAIL 1

SCALE 1 : 3

1 / 203-01

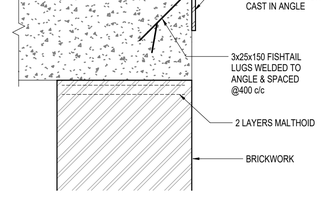

DETAIL 3

SCALE 1 : 5

3 / 203-01

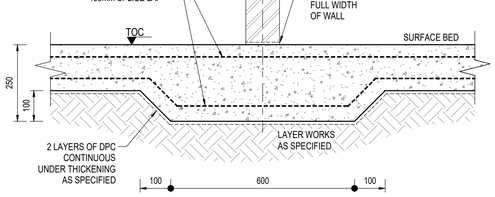

TYPICAL SLAB THICKENING DETAIL

SCALE 1 : 10

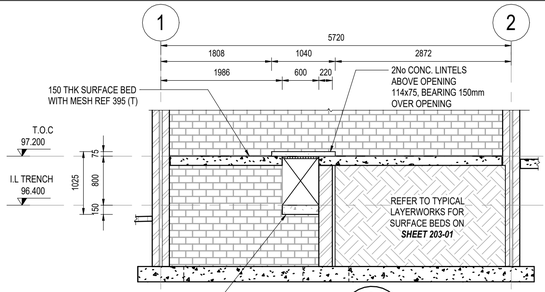

SECTION G

SCALE 1 : 50

G / 203-01

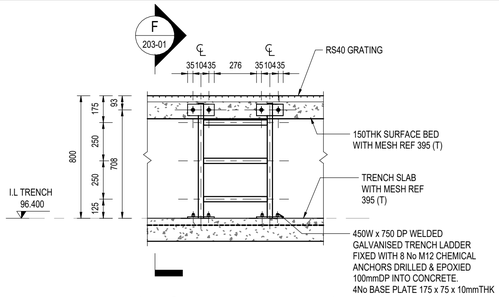

TYPICAL LADDER DETAIL

SCALE 1 : 20

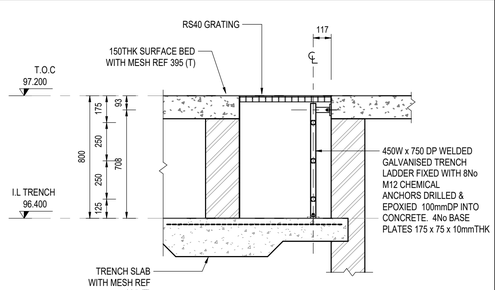

SECTION F

SCALE 1 : 20

0 10 50 100

O:\Projects Drawings\34000 - 34999\34092.00\Structural\Design Drawings\Revit Model\34092.02-STR-Stellenbosch Electrical Switching Substation (RVT2026).rvt

NOTES/LEGEND

APPROVED BY COUNCIL / CLIENT

CITY ENGINEER / CLIENT — REG. NO. — DATE

AMENDMENTS CODE

A,B,C.../ : BEFORE TENDER
T0 / : TENDER DRAWING
0,1,2.../ : AFTER TENDER
Z / : AS BUILT

/A : BY CLIENT
/B : BY ARCHITECT
/C : BY MECHANICAL OR ELECTRICAL
/D : BY BVI
/E : BY OTHER ( )

DATE	INITIAL	No./CODE	REVISION DESCRIPTION
XX/10/2026	D.L	T1	DRAWINGS ISSUED FOR TENDER

COPYRIGHT VESTS IN THIS DOCUMENT AND NO USE OR REPRODUCTION OR DUPLICATION THEREOF MAY OCCUR WITHOUT THE WRITTEN CONSENT OF BVI CONSULTING ENGINEERS

CLIENT

STELLENBOSCH
STELLENBOSCH • PNIEL • FRANSCHHOEK

CESA Consulting Engineers South Africa — ISO 9001 REGISTERED — SANAS
bvi 50 YEARS EST 1967
• ENGINEERING • PROCUREMENT • MANAGEMENT
Registration no. 1998/000157/07

PROVINCE	OFFICE		E-MAIL
Gauteng	Tshwane	(012) 940-1111	pta@bvigp.co.za
	Polokwane	(015) 291-5400	plk@bvilp.co.za
Free State	Bloemfontein	(051) 447-2137	bfn@bvifs.co.za
	Welkom	(057) 353-2499	wel@bvifs.co.za
Northern Cape	Upington	(054) 337-8000	upt@bvinc.co.za
	Springbok	(027) 712-8090	spk@bvinc.co.za
KwaZulu Natal	Durban	(031) 266-8382	dbn@bvikzn.co.za
	Empangeni	(035) 772-6112	emp@bvikzn.co.za
Eastern Cape	Port Elizabeth	(041) 373-4343	pe@bviec.co.za
	East London	(043) 726-1444	pe@bviec.co.za
Western Cape	Cape Town	(021) 527-7000	cpt@bviwc.co.za

Visit or contact us online at www.bvigroup.co.za

PROJECT

SWITCHING &
SUBSTATION BUILDING
ALEXANDER STR. STELLENBOSCH

DRAWING TITLE

CONCRETE DETAILS

PROJECT STATUS

ISSUED FOR TENDER

APPROVED BY BVi

ENGINEER/TECHNOLOGIST — 980354 REG. NO. — XX/10/2026 DATE

SCALE	As indicated @ A1	DRAWN	D.LOGIE
DESIGNED	C.PADAYACHEE	CHECKED	W.BRAND

PLAN NUMBER: 34092.02-203-01

REV. NO.: T1

COVER FOR STRIP FOOTINGS: 50mm

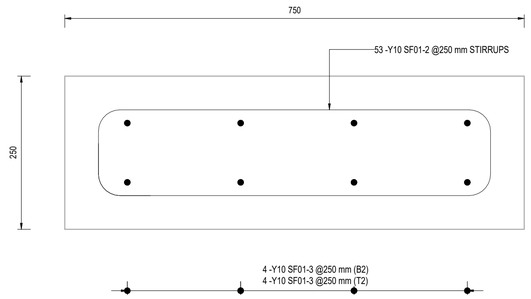

STRIP FOOTING SF01 - 1No

SCALE 1 : 5

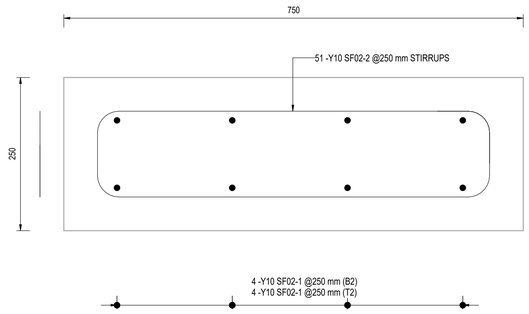

STRIP FOOTING SF02 - 3No

SCALE 1 : 5

NOTE:
ALL BARS TO HAVE A MIN.
SPLICE LENGTH OF 600mm

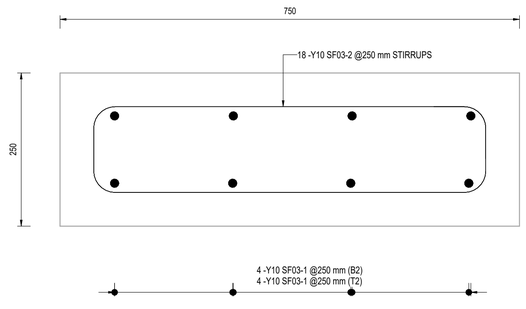

STRIP FOOTING SF03 - 1No

SCALE 1 : 5

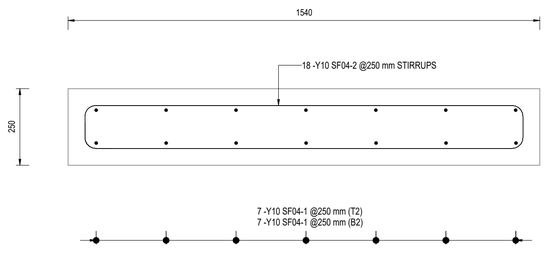

STRIP FOOTING SF04 - 1No

SCALE 1 : 10

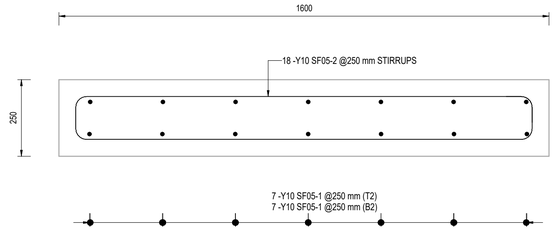

STRIP FOOTING SF05 - 1No

SCALE 1 : 10

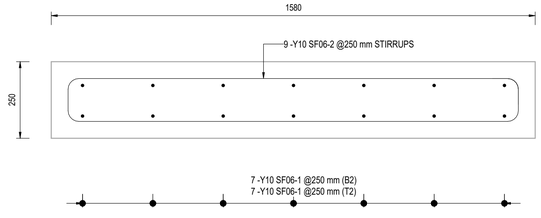

STRIP FOOTING SF06 - 3No

SCALE 1 : 10

STRIP FOOTING SF01 - 1No OFF BENDING SCHEDULE

NAME	NO.	BAR MARK	TYPE	ELEMENT	TOTAL	LENGTH	SHAPE CODE	A	B	C	D	E
SF01	1	SF01-2	Y10	53	53	1650 mm	60	150 mm	650 mm	0 mm	0 mm	0 mm
SF01	1	SF01-3	Y10	24	24	5000 mm	20	5000 mm	0 mm	0 mm	0 mm	0 mm

STRIP FOOTING SF01 - REINFORCEMENT WEIGHTS

ELEMENT	DIA	WEIGHT
SF01	Y10	127.90 kg
TOTAL		127.90 kg

STRIP FOOTING SF02 - 3No OFF BENDING SCHEDULE

NAME	NO.	BAR MARK	TYPE	ELEMENT	TOTAL	LENGTH	SHAPE CODE	A	B	C	D	E
SF02	3	SF02-1	Y10	24	72	4750 mm	20	4750 mm	0 mm	0 mm	0 mm	0 mm
SF02	3	SF02-2	Y10	51	153	1650 mm	60	150 mm	650 mm	0 mm	0 mm	0 mm

STRIP FOOTING SF02 - REINFORCEMENT WEIGHTS

ELEMENT	DIA	WEIGHT
SF02	Y10	366.50 kg
TOTAL		366.50 kg

STRIP FOOTING SF03 - 1No OFF BENDING SCHEDULE

NAME	NO.	BAR MARK	TYPE	ELEMENT	TOTAL	LENGTH	SHAPE CODE	A	B	C	D	E
SF03	1	SF03-1	Y10	16	16	3850 mm	20	3850 mm	0 mm	0 mm	0 mm	0 mm
SF03	1	SF03-2	Y10	18	18	1650 mm	60	150 mm	650 mm	0 mm	0 mm	0 mm

STRIP FOOTING SF03 - REINFORCEMENT WEIGHTS

ELEMENT	DIA	WEIGHT
SF03	Y10	56.29 kg
TOTAL		56.29 kg

STRIP FOOTING SF04 - 1No OFF BENDING SCHEDULE

NAME	NO.	BAR MARK	TYPE	ELEMENT	TOTAL	LENGTH	SHAPE CODE	A	B	C	D	E
SF04	1	SF04-1	Y10	28	28	3850 mm	20	3850 mm	0 mm	0 mm	0 mm	0 mm
SF04	1	SF04-2	Y10	18	18	3230 mm	60	150 mm	1440 mm	0 mm	0 mm	0 mm

STRIP FOOTING SF04 - REINFORCEMENT WEIGHTS

ELEMENT	DIA	WEIGHT
SF04	Y10	102.31 kg
TOTAL		102.31 kg

STRIP FOOTING SF05 - 1No OFF BENDING SCHEDULE

NAME	NO.	BAR MARK	TYPE	ELEMENT	TOTAL	LENGTH	SHAPE CODE	A	B	C	D	E
SF05	1	SF05-1	Y10	28	28	3850 mm	20	3850 mm	0 mm	0 mm	0 mm	0 mm
SF05	1	SF05-2	Y10	18	18	3350 mm	60	150 mm	1500 mm	0 mm	0 mm	0 mm

STRIP FOOTING SF05 - REINFORCEMENT WEIGHTS

ELEMENT	DIA	WEIGHT
SF05	Y10	103.64 kg
TOTAL		103.64 kg

STRIP FOOTING SF06 - 3No OFF BENDING SCHEDULE

NAME	NO.	BAR MARK	TYPE	ELEMENT	TOTAL	LENGTH	SHAPE CODE	A	B	C	D	E
SF06	3	SF06-1	Y10	14	42	3350 mm	20	3350 mm	0 mm	0 mm	0 mm	0 mm
SF06	3	SF06-2	Y10	9	27	3310 mm	60	150 mm	1480 mm	0 mm	0 mm	0 mm

STRIP FOOTING SF06 - REINFORCEMENT WEIGHTS

ELEMENT	DIA	WEIGHT
SF06	Y10	141.85 kg
TOTAL		141.85 kg

NOTES/LEGEND

APPROVED BY COUNCIL / CLIENT

CITY ENGINEER / CLIENT | REG. NO. | DATE

AMENDMENTS CODE

A,B,C.../ : BEFORE TENDER
T0 / : TENDER DRAWING
0,1,2.../ : AFTER TENDER
Z / : AS BUILT

/A : BY CLIENT
/B : BY ARCHITECT
/C : BY MECHANICAL OR ELECTRICAL
/D : BY BVi
/E : BY OTHER ( )

DATE	INITIAL	No./CODE	REVISION DESCRIPTION
XX/10/2026	D.L	T1	DRAWINGS ISSUED FOR TENDER

COPYRIGHT VESTS IN THIS DOCUMENT AND NO USE OR REPRODUCTION OR DUPLICATION THEREOF MAY OCCUR WITHOUT THE WRITTEN CONSENT OF BVi CONSULTING ENGINEERS

CLIENT

STELLENBOSCH
STELLENBOSCH • PNIEL • FRANSCHHOEK

CESA Consulting Engineers South Africa
bvi 50 YEARS EST 1967
• ENGINEERING • PROCUREMENT • MANAGEMENT
Registration no. 1998/000157/07

PROVINCE	OFFICE	☎	E-MAIL
Gauteng	Tshwane	(012) 940-1111	pta@bvigc.co.za
	Polokwane	(015) 291-5400	plk@bvi.co.za
Free State	Bloemfontein	(051) 447-2137	bfn@bvifs.co.za
	Welkom	(057) 353-2499	wel@bvifs.co.za
Northern Cape	Upington	(054) 337-6600	upt@bvinc.co.za
	Springbok	(027) 712-8990	spk@bvinc.co.za
KwaZulu Natal	Durban	(031) 266-8382	dbn@bvikzn.co.za
	Empangeni	(035) 772-8112	emp@bvikzn.co.za
Eastern Cape	Port Elizabeth	(041) 373-4343	pe@bviec.co.za
	East London	(043) 726-1444	pe@bviec.co.za
Western Cape	Cape Town	(021) 527-7000	cpt@bviwc.co.za

Visit or contact us online at www.bvigroup.co.za

PROJECT

SWITCHING &
SUBSTATION BUILDING
ALEXANDER STR. STELLENBOSCH

DRAWING TITLE

STRIP FOOTING REBAR LAYOUT & BENDING SCHEDULES

PROJECT STATUS

ISSUED FOR TENDER

APPROVED BY BVi

ENGINEER/TECHNOLOGIST | 980354 REG. NO. | XX/10/2026 DATE

SCALE	As indicated @ A1	DRAWN	D.LOGIE
DESIGNED	C.PADAYACHEE	CHECKED	W.BRAND

PLAN NUMBER	REV. NO.
34092.02-204-01	T1

0 10 50 100

COVER FOR R.C STAIRCASE: 50mm

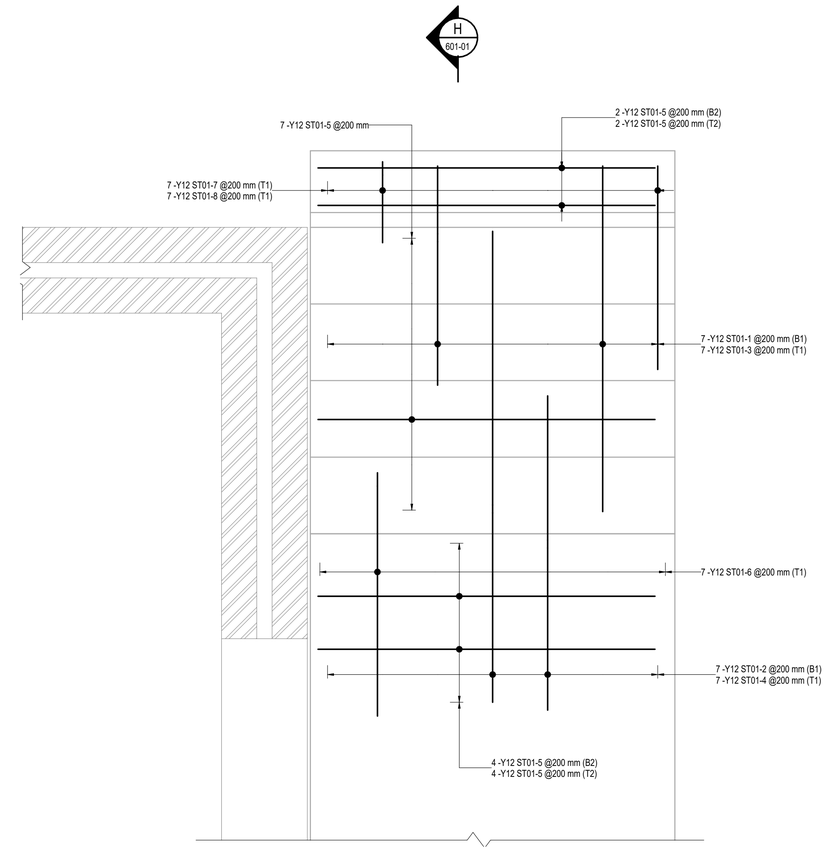

ST01 - R.C STAIR REBAR PLAN - 2No OFF

SCALE 1 : 10

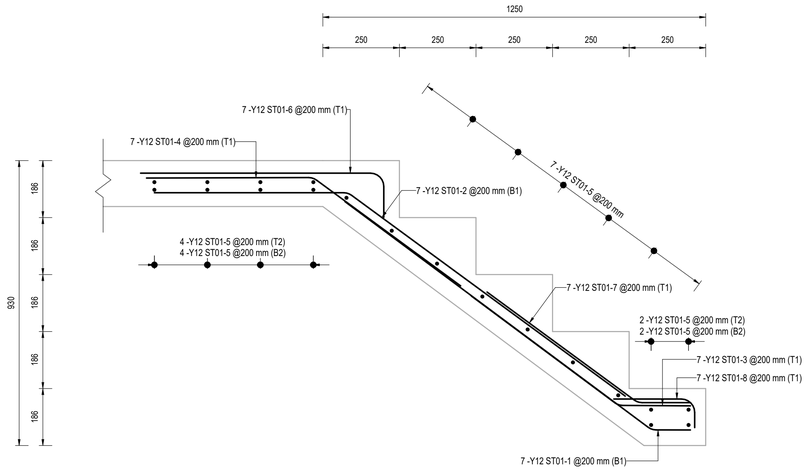

SECTION H

SCALE 1 : 10

H
204-02

ST01 - R.C STAIR - 2No OFF BENDING SCHEDULE

NAME	NO.	BAR MARK	TYPE	ELEMENT	TOTAL	LENGTH	SHAPE CODE	A	B	C	D	E
ST01	2	ST01-1	Y12	7	14	1370 mm	62	130 mm	75 mm	1250 mm	0 mm	0 mm
ST01	2	ST01-2	Y12	7	14	1750 mm	62	635 mm	375 mm	1125 mm	0 mm	0 mm
ST01	2	ST01-3	Y12	7	14	830 mm	62	235 mm	140 mm	600 mm	0 mm	0 mm
ST01	2	ST01-4	Y12	7	14	1140 mm	62	545 mm	325 mm	600 mm	0 mm	0 mm
ST01	2	ST01-5	Y12	19	38	1100 mm	20	1100 mm	0 mm	0 mm	0 mm	0 mm
ST01	2	ST01-6	Y12	7	14	920 mm	37	800 mm	150 mm	0 mm	0 mm	0 mm
ST01	2	ST01-7	Y12	7	14	780 mm	62	610 mm	360 mm	175 mm	0 mm	0 mm
ST01	2	ST01-8	Y12	7	14	340 mm	37	270 mm	100 mm	0 mm	0 mm	0 mm

ST01 - R.C STAIR REINFORCEMENT WEIGHTS

ELEMENT	DIA	WEIGHT
ST01	Y12	125.73 kg
TOTAL		125.73 kg

NOTES/LEGEND

APPROVED BY COUNCIL / CLIENT

CITY ENGINEER / CLIENT | REG. NO. | DATE

AMENDMENTS CODE

A,B,C.../ : BEFORE TENDER
T0 / : TENDER DRAWING
0,1,2.../ : AFTER TENDER
Z / : AS BUILT

/A : BY CLIENT
/B : BY ARCHITECT
/C : BY MECHANICAL OR ELECTRICAL
/D : BY BVI
/E : BY OTHER ( )

DATE	INITIAL	No./CODE	REVISION DESCRIPTION
XX/10/2026	D.L	T1	DRAWINGS ISSUED FOR TENDER

COPYRIGHT VESTS IN THIS DOCUMENT AND NO USE OR REPRODUCTION OR DUPLICATION THEREOF MAY OCCUR WITHOUT THE WRITTEN CONSENT OF BVI CONSULTING ENGINEERS

CLIENT

STELLENBOSCH
STELLENBOSCH • PNIEL • FRANSCHHOEK

CESA Consulting Engineers South Africa
bvi 50 YEARS EST 1967
• ENGINEERING • PROCUREMENT • MANAGEMENT
Registration no. 1998/000157/07

PROVINCE	OFFICE		E-MAIL
Gauteng	Tshwane	(012) 940-1111	pta@bvigc.co.za
	Polokwane	(015) 291-5400	plk@bvi.co.za
Free State	Bloemfontein	(051) 447-2137	bfn@bvifs.co.za
	Welkom	(057) 353-2499	wel@bvifs.co.za
Northern Cape	Upington	(054) 337-6600	upt@bvinc.co.za
	Springbok	(027) 712-8990	spk@bvinc.co.za
KwaZulu Natal	Durban	(031) 266-8382	dbn@bvikn.co.za
	Empangeni	(035) 772-6112	emp@bvikn.co.za
Eastern Cape	Port Elizabeth	(041) 373-4343	pe2@bviec.co.za
	East London	(043) 726-1444	pe2@bviec.co.za
Western Cape	Cape Town	(021) 527-7000	cpt@bvicc.co.za

Visit or contact us online at www.bvigroup.co.za

PROJECT

SWITCHING & SUBSTATION BUILDING
ALEXANDER STR. STELLENBOSCH

DRAWING TITLE

R.C STAIR REBAR LAYOUT & BENDING SCHEDULE

PROJECT STATUS

ISSUED FOR TENDER

APPROVED BY BVi

ENGINEER/TECHNOLOGIST | 980354 REG. NO. | XX/10/2026 DATE

SCALE	1 : 10 @ A1	DRAWN	D.LOGIE
DESIGNED	C.PADAYACHEE	CHECKED	W.BRAND

PLAN NUMBER	REV. NO.
34092.02-204-02	T1

0 10 50 100

O:\Projects Drawings\34000 - 34999\34092.00\Structural\Design Drawings\Revit Model\34092.02-STR-Stellenbosch Electrical Switching Substation (RVT2026).rvt

NOTE:
ANY DISCREPANCIES TO BE REPORTED TO ENGINEER IMMEDIATELY

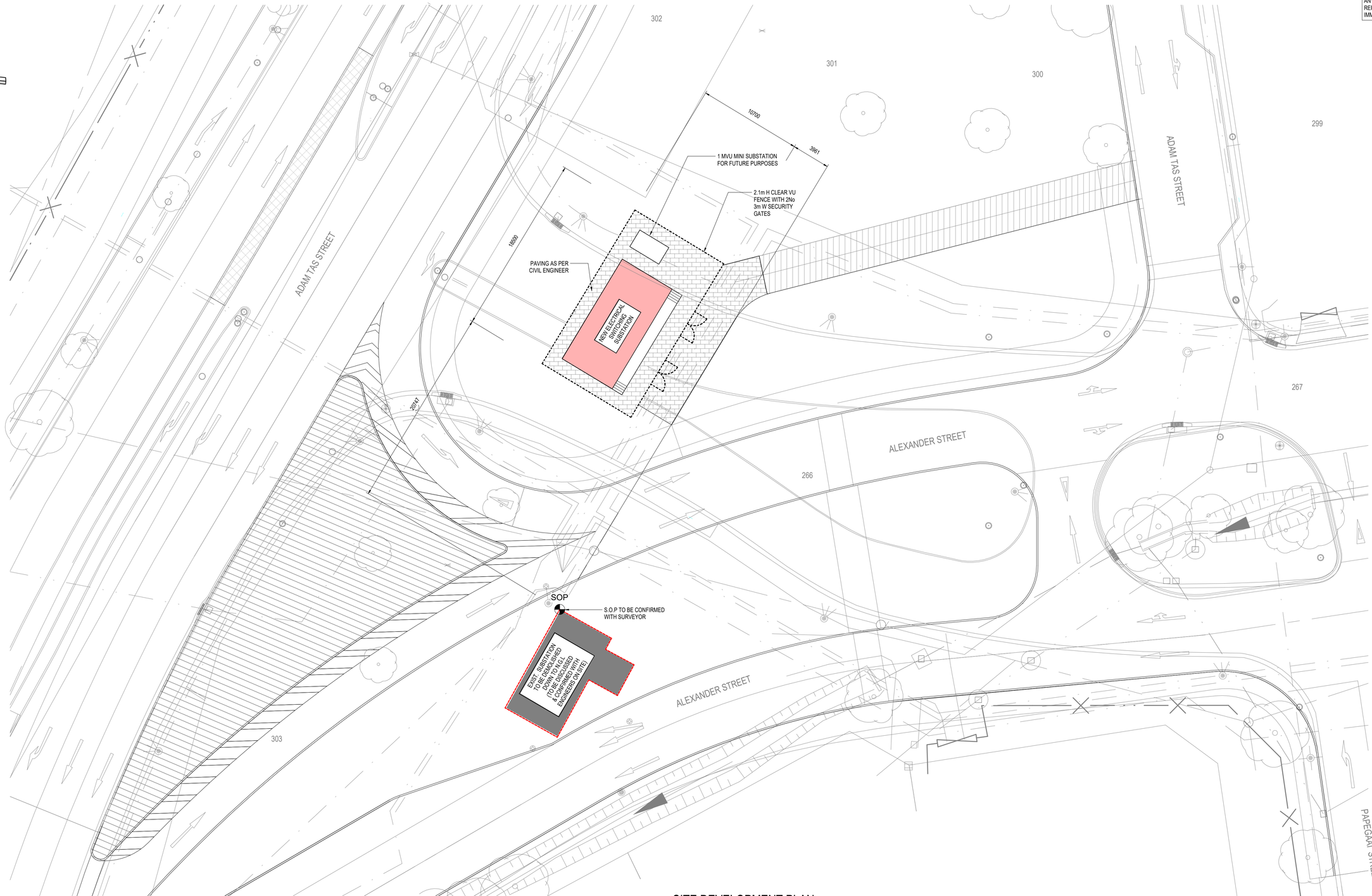

SITE DEVELOPMENT PLAN

SCALE 1 : 200

NOTES/LEGEND

APPROVED BY COUNCIL / CLIENT

CITY ENGINEER / CLIENT | REG. NO. | DATE

AMENDMENTS CODE

A,B,C.../ : BEFORE TENDER
T0 / : TENDER DRAWING
0,1,2.../ : AFTER TENDER
Z / : AS BUILT

/A : BY CLIENT
/B : BY ARCHITECT
/C : BY MECHANICAL OR ELECTRICAL
/D : BY BVi
/E : BY OTHER ( )

DATE	INITIAL	No./CODE	REVISION DESCRIPTION
XX/10/2026	D.L	T1	DRAWINGS ISSUED FOR TENDER

COPYRIGHT VESTS IN THIS DOCUMENT AND NO USE OR REPRODUCTION OR DUPLICATION THEREOF MAY OCCUR WITHOUT THE WRITTEN CONSENT OF BVI CONSULTING ENGINEERS

CLIENT

STELLENBOSCH
STELLENBOSCH • PNIEL • FRANSCHHOEK

CESA Consulting Engineers South Africa
bvi 50 YEARS EST 1967
• ENGINEERING • PROCUREMENT • MANAGEMENT
Registration no. 1998/000157/07

PROVINCE	OFFICE	☎	E-MAIL
Gauteng	Tshwane	(012) 940-1111	pta@bvigc.co.za
	Polokwane	(015) 291-5400	plk@bvitp.co.za
Free State	Bloemfontein	(051) 447-2137	bfn@bvifs.co.za
	Welkom	(057) 353-2499	wel@bvifs.co.za
Northern Cape	Upington	(054) 337-6600	upt@bvinc.co.za
	Springbok	(027) 712-8990	spb@bvinc.co.za
KwaZulu Natal	Durban	(031) 266-8382	dbn@bvikn.co.za
	Empangeni	(035) 772-8112	emp@bvikn.co.za
Eastern Cape	Port Elizabeth	(041) 373-4343	pe@bviec.co.za
	East London	(043) 726-1444	pe@bviec.co.za
Western Cape	Cape Town	(021) 837-7000	cpt@bviwc.co.za

Visit or contact us online at www.bvigroup.co.za

PROJECT

SWITCHING &
SUBSTATION BUILDING
ALEXANDER STR. STELLENBOSCH

DRAWING TITLE

SITE DEVELOPMENT PLAN

PROJECT STATUS

ISSUED FOR TENDER

APPROVED BY BVi

ENGINEER/TECHNOLOGIST | 980354 REG. NO. | XX/10/2026 DATE

SCALE	1 : 200 @ A1	DRAWN	D.LOGIE
DESIGNED	C.PADAYACHEE	CHECKED	W.BRAND

PLAN NUMBER	REV. NO.
34092.02-600-01	T1

0 10 50 100

O:\Projects Drawings\34000 - 34999\34092.00\Structural\Design Drawings\Revit Model\34092.02-STR-Stellenbosch Electrical Switching Substation (RVT2026).rvt

NOTE:
DEMOLISH THE EXISTING STRUCTURE DOWN TO N.G.L IN A CONTROLLED MANNER THAT LEAVES REMAINING WALLS SOUND, LEVEL & SUITABLE TO RECEIVE PRECAST STRUCTURAL SLABS. CONTRACTOR MUST HAVE REMAINING WALLS INSPECTED & APPROVED BY THE ENGINEER BEFORE THE SLABS ARE INSTALLED.

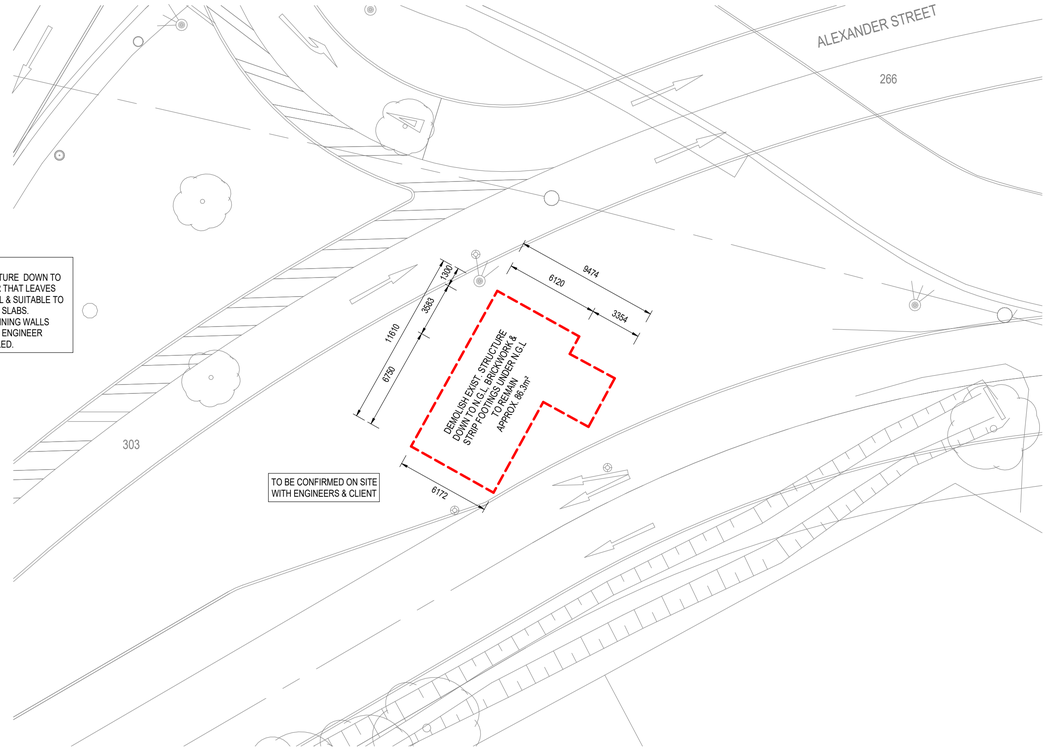

DEMOLITION LAYOUT

SCALE 1 : 200

NOTE:
ANY DISCREPANCIES TO BE REPORTED TO ENGINEER IMMEDIATELY

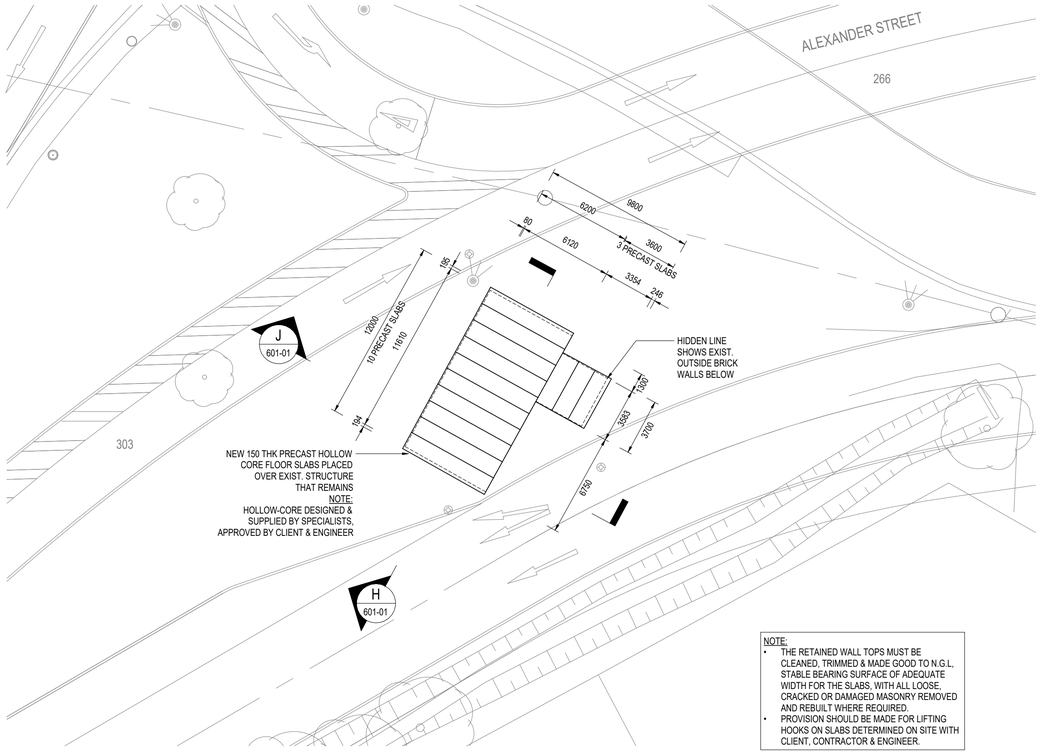

NOTE:
- THE RETAINED WALL TOPS MUST BE CLEANED, TRIMMED & MADE GOOD TO N.G.L, STABLE BEARING SURFACE OF ADEQUATE WIDTH FOR THE SLABS, WITH ALL LOOSE, CRACKED OR DAMAGED MASONRY REMOVED AND REBUILT WHERE REQUIRED.
- PROVISION SHOULD BE MADE FOR LIFTING HOOKS ON SLABS DETERMINED ON SITE WITH CLIENT, CONTRACTOR & ENGINEER.

NEW WORKS LAYOUT

SCALE 1 : 200

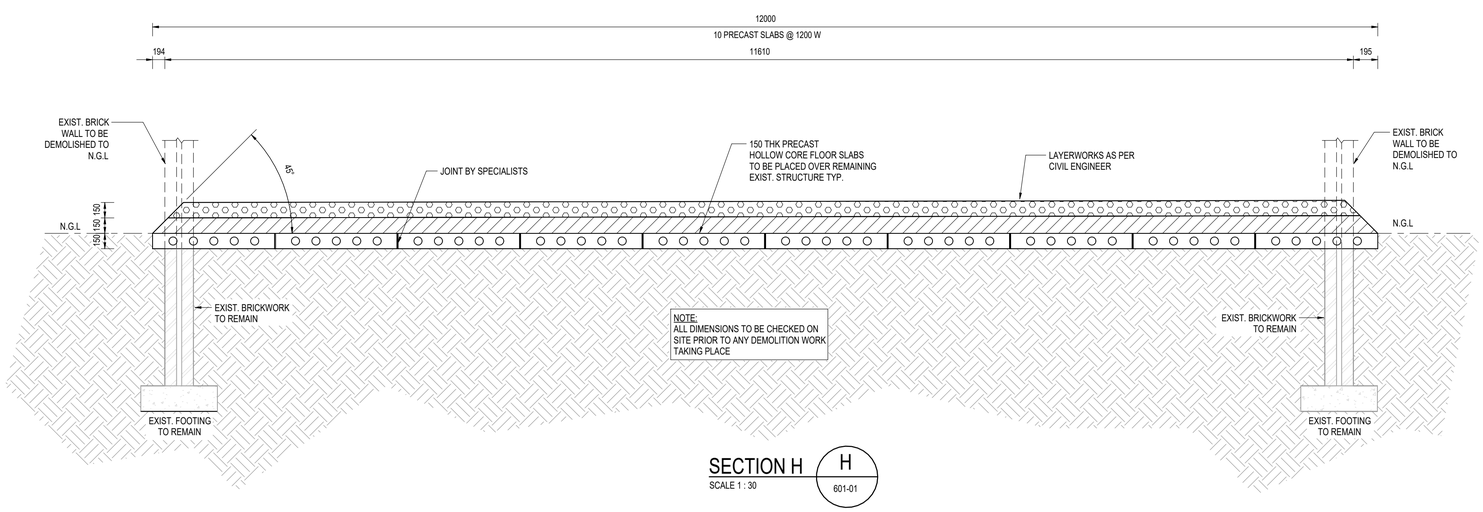

SECTION H

SCALE 1 : 30

H
601-01

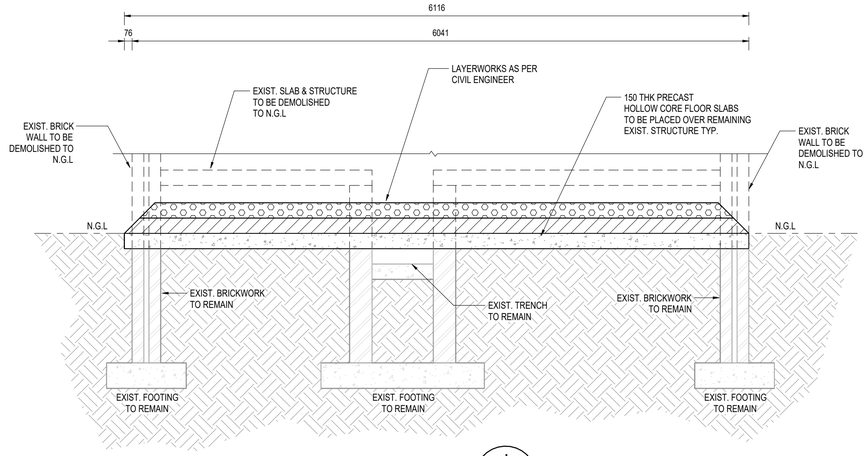

SECTION J

SCALE 1 : 30

J
601-01

NOTES/LEGEND	APPROVED BY COUNCIL / CLIENT
	CITY ENGINEER / CLIENT — REG. NO. — DATE

AMENDMENTS CODE

A,B,C.../ : BEFORE TENDER
T0 / : TENDER DRAWING
0,1,2.../ : AFTER TENDER
Z / : AS BUILT

/A : BY CLIENT
/B : BY ARCHITECT
/C : BY MECHANICAL OR ELECTRICAL
/D : BY BVI
/E : BY OTHER ( )

DATE	INITIAL	No./CODE	REVISION DESCRIPTION
XX/10/2026	D.L	T1	DRAWINGS ISSUED FOR TENDER

COPYRIGHT VESTS IN THIS DOCUMENT AND NO USE OR REPRODUCTION OR DUPLICATION THEREOF MAY OCCUR WITHOUT THE WRITTEN CONSENT OF BVI CONSULTING ENGINEERS

CLIENT

STELLENBOSCH
STELLENBOSCH • PNIEL • FRANSCHHOEK

CESA Consulting Engineers South Africa
bvi 50 YEARS EST 1967
• ENGINEERING • PROCUREMENT • MANAGEMENT
Registration no. 1998/000157/07

PROVINCE	OFFICE		E-MAIL
Gauteng	Tshwane	(012) 940-1111	pta@bvigs.co.za
	Polokwane	(015) 291-5400	plk@bvifs.co.za
Free State	Bloemfontein	(051) 447-2137	bfn@bvifs.co.za
	Welkom	(057) 353-2499	wel@bvifs.co.za
Northern Cape	Upington	(054) 337-6600	upt@bvinc.co.za
	Springbok	(027) 712-8990	spk@bvinc.co.za
KwaZulu Natal	Durban	(031) 266-8382	dbn@bvikn.co.za
	Empangeni	(035) 772-6112	emp@bvikn.co.za
Eastern Cape	Port Elizabeth	(041) 373-4343	pz@bviec.co.za
	East London	(043) 726-1444	pz@bviec.co.za
Western Cape	Cape Town	(021) 527-7000	cpt@bvicc.co.za

Visit or contact us online at www.bvigroup.co.za

PROJECT	APPROVED BY BVi
SWITCHING & SUBSTATION BUILDING ALEXANDER STR. STELLENBOSCH	ENGINEER/TECHNOLOGIST — 980354 REG. NO. — XX/10/2026 DATE
DRAWING TITLE	
EXISTING STRUCTURE - DEMOLITION & NEW WORKS LAYOUT	SCALE: As indicated @ A1 — DRAWN: D.LOGIE — DESIGNED: C.PADAYACHEE — CHECKED: W.BRAND
PROJECT STATUS	**PLAN NUMBER** — **REV. NO.**
ISSUED FOR TENDER	34092.02-601-01 — T1

0 10 50 100

O:\Projects Drawings\34000 - 34999\34092.00\Structural\Design Drawings\Revit Model\34092.02-STR-Stellenbosch Electrical Switching Substation (RVT2026).rvt

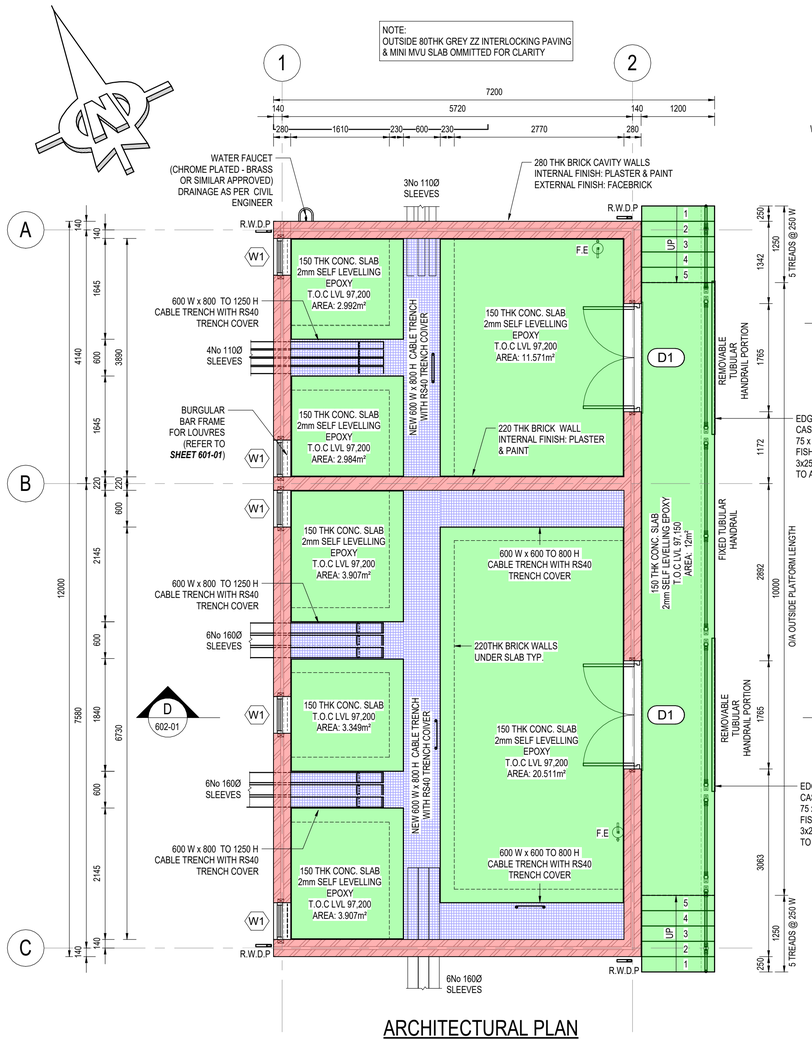

ARCHITECTURAL PLAN

SCALE 1 : 50

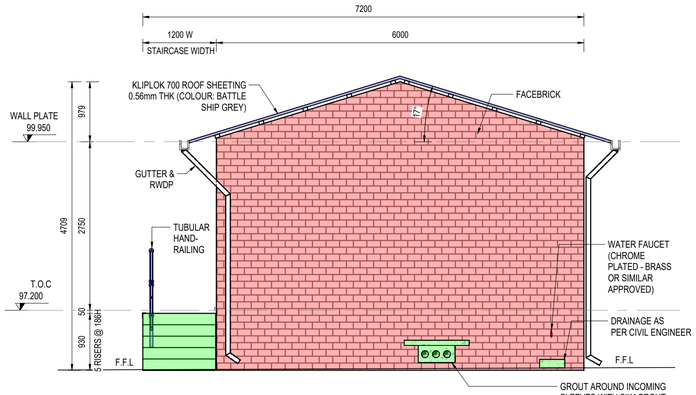

NORTH ELEVATION

SCALE 1 : 50

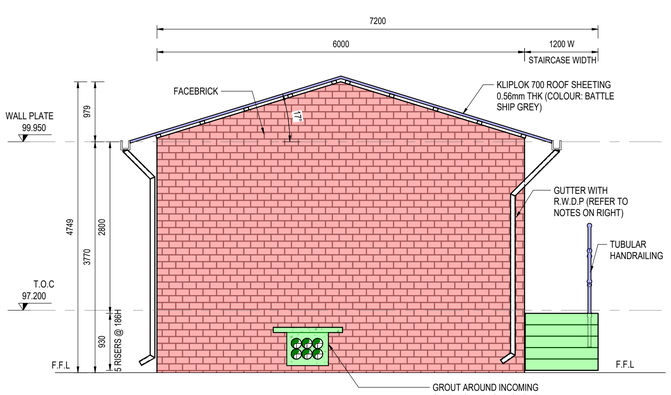

SOUTH ELEVATION

SCALE 1 : 50

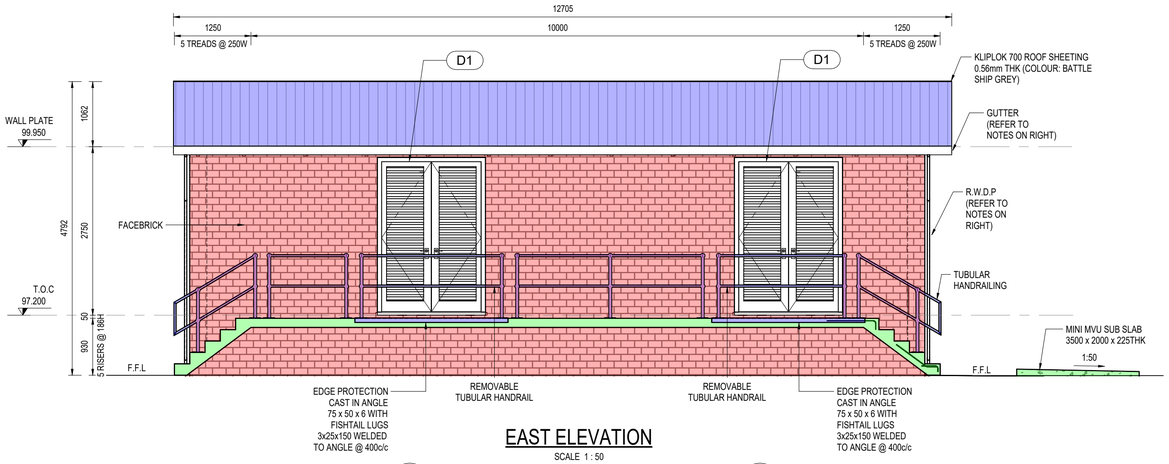

EAST ELEVATION

SCALE 1 : 50

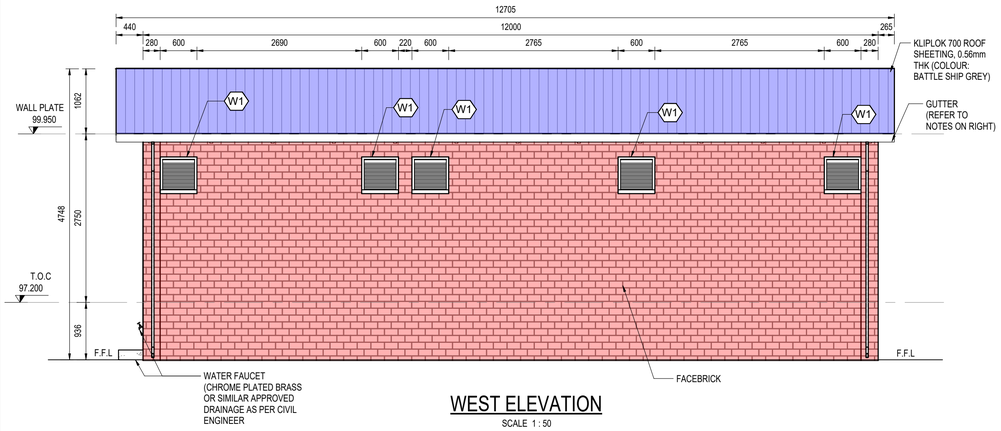

WEST ELEVATION

SCALE 1 : 50

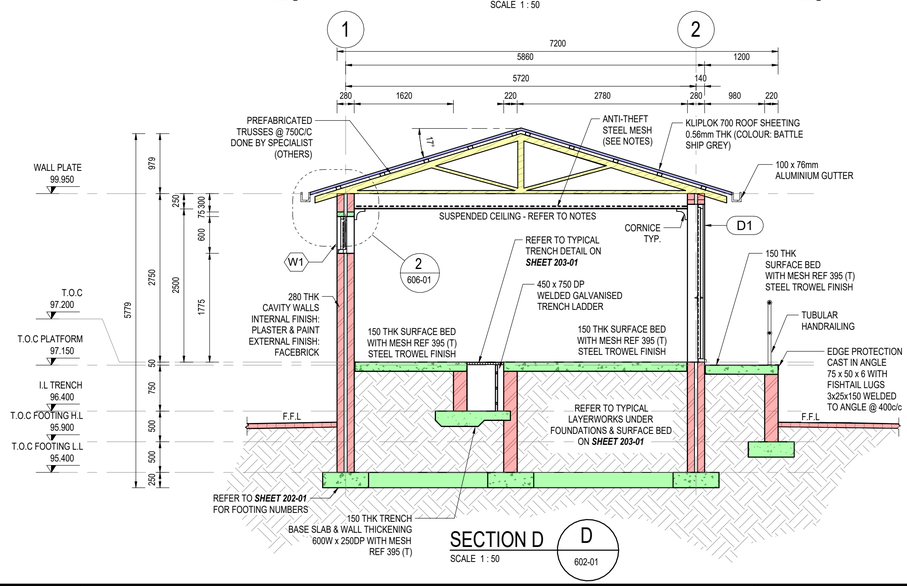

SECTION D

SCALE 1 : 50

D
602-01

NOTE:
ANY DISCREPANCIES TO BE REPORTED TO ENGINEER IMMEDIATELY

GENERAL SPECIFICATION

FOUNDATIONS:

750x250mm TYP. CONCRETE STRIP FOOTINGS FOR 280mm CAVITY WALLS U.N.O.

GROUND FLOOR:

150mm CONCRETE BED WITH REF. MESH 395 (T) ON SELECTED WELL COMPACTED FILL.
250 µm DPC TO BE LAID WALL TO WALL

WALLS:

EXTERNAL WALLS 280mm CAVITY BRICK WALL.
14MPa FACEBRICK EXTERNALLY.
PLASTERED & PAINTED INTERNALLY TO MATCH EXISTING.
BRICKFORCE TO BE PROVIDED EVERY 3RD LAYER OF BRICKS & GALV. BUTTERFLY TIES SPACED 900mm C/C HORIZONTALLY & 400mm C/C VERTICALLY. TIES NOT LESS THAN 9 TIES PER SQM.

INTERNAL WALLS 220THK 14MPa BRICK WALL PLASTERED & PAINTED TO MATCH EXIST.

ROOFING OVER - PITCH 17° (BY SPECIALISTS):

KLIPLOK 700 ROOF SHEETING, 0.56mm THK (COLOUR: BATTLE SHIP GREY) ON 76x50 PURLINS AT 900c/c ON APPROVED UNDERLAY SABS QUALITY, FIXED TO RAFTERS AT 750c/c. TRUSSES TO BE TIED DOWN WITH GALV. HOOP IRON 1,2x30mm STRAPS OR 2 STRANDS OF 4mm TIE WIRE ONTO 114x38 WALL PLATE, EMBEDDED MIN. 300mm INTO BRICKWORK.

RAFTER SIZE 114x38 GRADE 5 TIMBER
STRUTS SIZE 114x38 GRADE 5 TIMBER
TIE BEAM SIZE 114x38 GRADE 5 TIMBER

ROOF TRUSS BRACING 114x38 DIAGONAL END BRACING (45°) NAILED TO UNDERSIDE OF RAFTERS AT EACH END OF ROOF IN BOTH PLANES.

INSTALL SISALATION FOIL UNDER ROOF SHEETING.

CEILING:

12.5mm RHINOBOARD FIRE-RATED (FIRELINE) CEILING BOARDS TO ROOF STRUCTURE. THE CEILING SYSTEM IS TO MEET THE FIRE RATING REQUIRED BY SANS 10400-T AND THE CLIENTS SPECIFICATION FIXED TO 38x38 BRANDERING @ 400C/C FIXED TO RAFTERS WITH COVED CORNICE AROUND EDGES.

75mm RHINO COVE CORNICE AROUND FULL PERIMETER OF CEILING, INCLUDING ADHESIVES, MITERED CORNERS, FILLING & PAINTING

INSTALL 2 LAYERS 50 x 50 x 3mm GALV. WELDED ANTI-THEFT STEEL MESH ABOVE CEILING BOARDS.

FIX FASCIA & BARGE BOARDS.

DOORS & WINDOWS:

ALL WINDOWS & DOORS AS PER SIZES SPECIFIED TO OWNERS SPECIFICATION.

2No TRANSFORMER DOORS WITH LOUVRES AT BOTTOM OF EACH DOOR

5No 600 x 600mm STEEL FLANGED LOUVRES, SUPPLY & INSTALL BURGLAR BARS TO INSIDE OF LOUVRES.

PRECAST PRESTRESSED FABRICATED LINTELS 110x75mm TO BE USED OVER OPENINGS 1,0m - 3,0m LAID TO THE MANUFACTURER'S SPECIFICATION.

GUTTER & RWDP:

ALUMINIUM GUTTER 100 x 76mm FIXED WITH GUTTER BRACKET & SCREWS WITH 76 x 50mm RWDP. RWDP FIXED FLUSH AGAINST WALL.

MIN. 2m SURFACE CHANNELS TO BE LAID AT THE MOUTH OF ALL RWDP's.

INSULATION:

135mm AEROLITE SOFT TOUCH GLASSWOOL INSULATION INSTALLED R-VALUE 3.76m².K/W

FLOOR FINISH:

1.5mm TO 2mm SELF LEVELLING EPOXY

GENERAL:

EXTERNAL WALLS FACEBRICK.

NO BUILDING WORK OR STRUCTURE TO ENCROACH BOUNDARY.

ALL BUILDING RUBBLE TO BE REMOVED BY CONTRACTOR / BUILDER.

ALL LEVEL DETAILS AND DIMENSIONS TO BE VERIFIED ON SITE AND IS TO DO THE SAME AGAINST DRAWING.

BUILDING WORK TO COMPLY WITH NATIONAL BUILDING REGULATIONS AND LOCAL BY-LAW.

THE BOUNDARY PEGS ARE TO BE POINTED OUT BY THE BUILDING INSPECTOR DURING SITE INSPECTION.

ALL DIMENSIONS TO BE TAKEN IN PREFERENCE TO SCALED DIMENSIONS.

GROUTING AROUND INCOMING SLEEVES WITH SIKAGROUT 212 OR SIMILAR APPROVED.

3No 450W x 750 DP WELDED GALVANISED TRENCH LADDERS FIXED TO WALLS OF TRENCH, RUNGS SPACED @ 250c/c, FIRST RUNG BEING 200mm FROM SLAB (SEE LAYOUT FOR LOCATIONS)

PAINT:
INTERNAL WALLS:
PREPARE & APPLY 1 COAT UNIVERSAL UNDERCOAT & 2 COATS PLASCON VELVAGLO

EXTERNAL WALLS:
PREPARE & APPLY 2 COATS DULUX BRICK DRESSING GLOSS OR SIMILAR APPROVED

NOTES/LEGEND	APPROVED BY COUNCIL / CLIENT	REVISION DESCRIPTION
	CITY ENGINEER / CLIENT — REG. NO. — DATE	XX/10/2026 D.L T1 DRAWINGS ISSUED FOR TENDER

AMENDMENTS CODE

A,B,C.../ : BEFORE TENDER
T0 / : TENDER DRAWING
0,1,2.../ : AFTER TENDER
Z / : AS BUILT

/A : BY CLIENT
/B : BY ARCHITECT
/C : BY MECHANICAL OR ELECTRICAL
/D : BY BVi
/E : BY OTHER ( )

COPYRIGHT VESTS IN THIS DOCUMENT AND NO USE OR REPRODUCTION OR DUPLICATION THEREOF MAY OCCUR WITHOUT THE WRITTEN CONSENT OF BVI CONSULTING ENGINEERS

CLIENT: STELLENBOSCH — STELLENBOSCH • PNIEL • FRANSCHHOEK

CESA Consulting Engineers South Africa — ISO 9001 REGISTERED — SAQA
bvi 50 YEARS EST 1967
• ENGINEERING • PROCUREMENT • MANAGEMENT
Registration no. 1998/000157/07

PROVINCE	OFFICE	☎	E-MAIL
Gauteng	Tshwane	(012) 940-1111	pta@bvigp.co.za
	Polokwane	(015) 291-6400	plk@bvifs.co.za
Free State	Bloemfontein	(051) 447-2127	bfn@bvifs.co.za
	Welkom	(057) 353-2499	wel@bvifs.co.za
Northern Cape	Upington	(054) 337-6900	upt@bvinc.co.za
	Springbok	(027) 712-8998	spb@bvinc.co.za
KwaZulu Natal	Durban	(031) 266-8382	dbn@bvikn.co.za
	Empangeni	(035) 772-6112	emp@bvikn.co.za
Eastern Cape	Port Elizabeth	(041) 373-4343	pla@bvinc.co.za
	East London	(043) 726-1444	pla@bvinc.co.za
Western Cape	Cape Town	(021) 821-7000	cpt@bvinc.co.za

Visit or contact us online at www.bvigroup.co.za

PROJECT: SWITCHING & SUBSTATION BUILDING ALEXANDER STR. STELLENBOSCH

DRAWING TITLE: ARCHITECTURAL LAYOUT, SECTIONS & ELEVATIONS

PROJECT STATUS: ISSUED FOR TENDER

APPROVED BY BVi: ENGINEER/TECHNOLOGIST — 980354 REG. NO. — XX/10/2026 DATE

SCALE	1 : 50 @ A1	DRAWN	D.LOGIE
DESIGNED	C.PADAYACHEE	CHECKED	W.BRAND

PLAN NUMBER	REV. NO.
34092.02-602-01	T1

0 10 50 100

O:\Projects Drawings\34000 - 34999\34092.00\Structural\Design Drawings\Revit Model\34092.02-STR-Stellenbosch Electrical Switching Substation (RVT2026).rvt

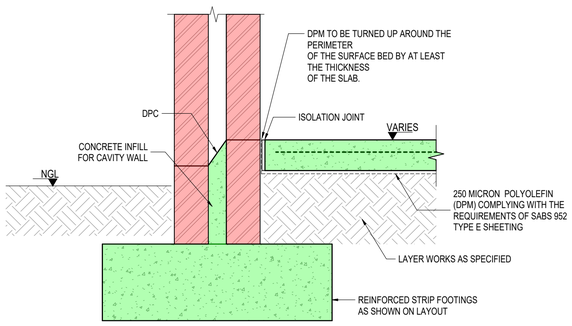

TYPICAL SECTION THROUGH EXTERNAL WALL STRIP FOOTING

SCALE 1 : 10

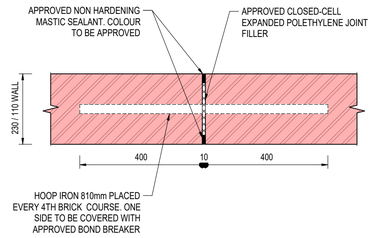

ARTICULATED JOINT (AJ)

SCALE 1 : 10

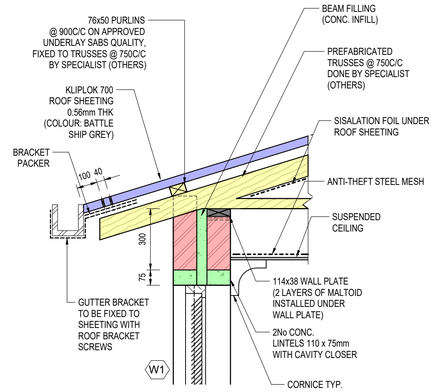

DETAIL 2 / 606-01

SCALE 1 : 15

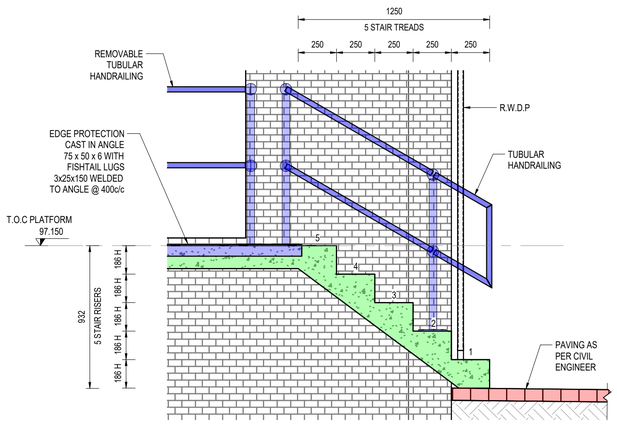

R.C STAIR DETAIL - 2No OFF

SCALE 1 : 20

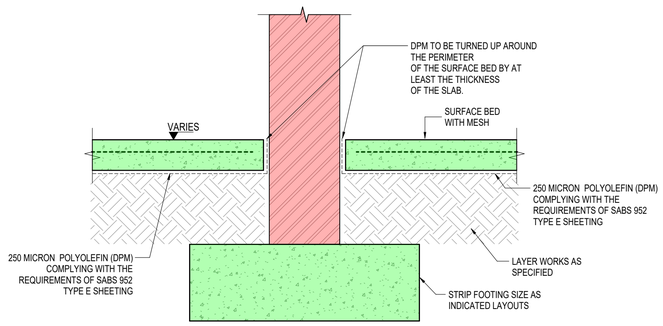

TYPICAL SECTION THROUGH INTERNAL WALL FOOTING

SCALE 1 : 10

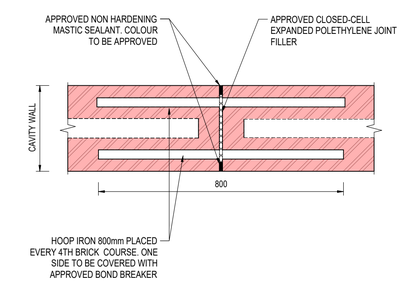

ARTICULATED JOINT - CAVITY WALL (AJ-C)

SCALE 1 : 10

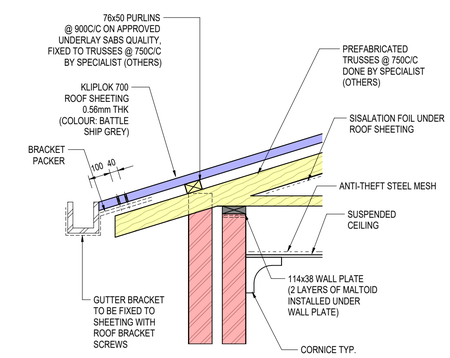

ROOF DETAIL (LINTEL OMITTED)

SCALE 1 : 15

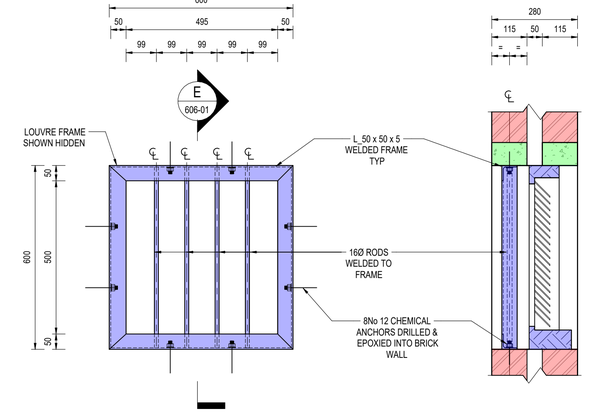

TYPICAL BURGULAR BARS FOR LOUVRES

SCALE 1 : 10

SECTION E

SCALE 1 : 10

NOTE:
ANY DISCREPANCIES TO BE REPORTED TO ENGINEER IMMEDIATELY

NOTES/LEGEND

APPROVED BY COUNCIL / CLIENT

CITY ENGINEER / CLIENT | REG. NO. | DATE

AMENDMENTS CODE

A,B,C.../ : BEFORE TENDER
T0 / : TENDER DRAWING
0,1,2.../ : AFTER TENDER
Z / : AS BUILT

/A : BY CLIENT
/B : BY ARCHITECT
/C : BY MECHANICAL OR ELECTRICAL
/D : BY BVi
/E : BY OTHER ( )

DATE	INITIAL	No./CODE	REVISION DESCRIPTION
XX/10/2026	D.L	T1	DRAWINGS ISSUED FOR TENDER

COPYRIGHT VESTS IN THIS DOCUMENT AND NO USE OR REPRODUCTION OR DUPLICATION THEREOF MAY OCCUR WITHOUT THE WRITTEN CONSENT OF BVi CONSULTING ENGINEERS

CLIENT

STELLENBOSCH
STELLENBOSCH • PNIEL • FRANSCHHOEK

CESA Consulting Engineers South Africa
bvi 50 YEARS EST 1967
• ENGINEERING • PROCUREMENT • MANAGEMENT
Registration no. 1998/000157/07

PROVINCE	OFFICE	☎	E-MAIL
Gauteng	Tshwane	(012) 940-1111	pta@bvigr.co.za
	Polokwane	(015) 291-5400	plk@bvlp.co.za
Free State	Bloemfontein	(051) 447-2137	bfn@bvfs.co.za
	Welkom	(057) 353-2499	wel@bvfs.co.za
Northern Cape	Upington	(054) 337-6600	upt@bvnc.co.za
	Springbok	(027) 712-8990	spk@bvnc.co.za
KwaZulu Natal	Durban	(031) 266-8382	dbn@bvkn.co.za
	Empangeni	(035) 772-6112	emp@bvkn.co.za
Eastern Cape	Port Elizabeth	(041) 373-4343	pe@bvec.co.za
	East London	(043) 726-1444	pe@bvec.co.za
Western Cape	Cape Town	(021) 527-7000	cpt@bvwc.co.za

Visit or contact us online at www.bvigroup.co.za

PROJECT

SWITCHING &
SUBSTATION BUILDING
ALEXANDER STR. STELLENBOSCH

DRAWING TITLE

ARCHITECTURAL DETAILS

PROJECT STATUS

ISSUED FOR TENDER

APPROVED BY BVi

ENGINEER/TECHNOLOGIST | 980354 REG. NO. | XX/10/2026 DATE

SCALE	As indicated @ A1	DRAWN	D.LOGIE
DESIGNED	C.PADAYACHEE	CHECKED	W.BRAND

PLAN NUMBER	REV. NO.
34092.02-606-01	T1

0 10 50 100

NOTE:
ANY DISCREPANCIES TO BE REPORTED TO ENGINEER IMMEDIATELY

DOOR SCHEDULE

DOORS VIEWED FROM OUTSIDE

D1 — TOTAL No OFF: x2

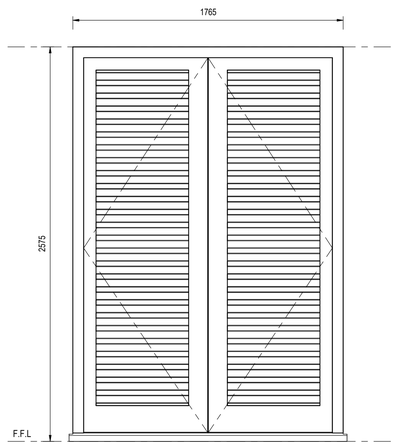

DOOR NUMBER:	D1 (EXTERIOR DOOR)
FRAME:	GALVANISED MILD STEEL
DOOR:	TRANSFORMER DOOR - LOUVRED STEEL DOORS (ACTIVE + INACTIVE LEAF)
GLAZING:	N/A
IRONMONGERY:	RUBBER DOOR STOP, 100mm CABIN HOOK & EYE INCL. 70 x 70 x 20mm CHAMFERED PLATE . ALL DOORS SUPPLIED WITH HINGES, HANDLES & LOCKS BY SUPPLIER TO CLIENTS SPECIFICATIONS.
PAINT FINISH:	PREPARE & APPLY 1 COAT OF UNDERCOAT & 2 COATS OF PLASCON HIGH GLOSS ENAMEL PAINT OR SIMILAR APPROVED. COLOUR TO BE APPROVED BY CLIENT

WINDOW SCHEDULE

WINDOWS VIEWED FROM THE OUTSIDE

W1 — TOTAL No OFF: x5

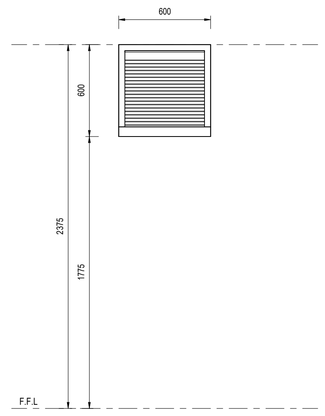

DOOR NUMBER:	W1 (EXTERIOR WINDOW)
FRAME:	GALVANISED MILD STEEL
WINDOW:	FIXED STEEL LOUVRES WITH INSECT MESH 0.6mx0.6m
GLAZING:	N/A
IRONMONGERY:	SUPPLY & INSTALL PRE-FABRICATED BURGLAR BARS TO INSIDE OF LOUVRES (***SEE SHEET 609-01***)
PAINT FINISH:	PREPARE & APPLY 1 COAT OF UNDERCOAT & 2 COATS OF PLASCON HIGH GLOSS ENAMEL PAINT OR SIMILAR APPROVED. COLOUR TO BE APPROVED BY CLIENT

NOTES/LEGEND

APPROVED BY COUNCIL / CLIENT

CITY ENGINEER / CLIENT — REG. NO. — DATE

AMENDMENTS CODE

A,B,C.../ : BEFORE TENDER
TO / : TENDER DRAWING
0,1,2.../ : AFTER TENDER
Z / : AS BUILT

/A : BY CLIENT
/B : BY ARCHITECT
/C : BY MECHANICAL OR ELECTRICAL
/D : BY BVi
/E : BY OTHER ( )

DATE	INITIAL	No./CODE	REVISION DESCRIPTION
XX/10/2026	D.L	T1	DRAWINGS ISSUED FOR TENDER

COPYRIGHT VESTS IN THIS DOCUMENT AND NO USE OR REPRODUCTION OR DUPLICATION THEREOF MAY OCCUR WITHOUT THE WRITTEN CONSENT OF BVI CONSULTING ENGINEERS

CLIENT

STELLENBOSCH
STELLENBOSCH • PNIEL • FRANSCHHOEK

CESA Consulting Engineers South Africa
bvi 50 YEARS EST 1967
• ENGINEERING • PROCUREMENT • MANAGEMENT
Registration no. 1998/000157/07

PROVINCE	OFFICE		E-MAIL
Gauteng	Tshwane	(012) 940-1111	pta@bvigc.co.za
	Polokwane	(015) 291-5400	plk@bvi.co.za
Free State	Bloemfontein	(051) 447-2137	bfn@bvifs.co.za
	Welkom	(057) 353-2458	wel@bvifs.co.za
Northern Cape	Upington	(054) 337-6800	upt@bvinc.co.za
	Springbok	(027) 712-8990	spk@bvinc.co.za
KwaZulu Natal	Durban	(031) 266-8382	dbn@bvikn.co.za
	Empangeni	(035) 772-6112	emp@bvikn.co.za
Eastern Cape	Port Elizabeth	(041) 373-4343	pe@bviec.co.za
	East London	(043) 726-1444	pe@bvigc.co.za
Western Cape	Cape Town	(021) 527-7000	cpt@bvivc.co.za

Visit or contact us online at www.bvigroup.co.za

PROJECT

SWITCHING &
SUBSTATION BUILDING
ALEXANDER STR. STELLENBOSCH

DRAWING TITLE

DOOR & WINDOW SCHEDULE

PROJECT STATUS

ISSUED FOR TENDER

APPROVED BY BVi

ENGINEER/TECHNOLOGIST — 980354 REG. NO. — XX/10/2026 DATE

SCALE	1 : 20 @ A1	DRAWN	D.LOGIE
DESIGNED	C.PADAYACHEE	CHECKED	W.BRAND

PLAN NUMBER	REV. NO.
34092.02-609-01	T1

0 10 50 100

O:\Projects Drawings\34000 - 34999\34092.00\Structural\Design Drawings\Revit Model\34092.02-STR-Stellenbosch Electrical Switching Substation (RVT2026).rvt

Geo Services Consultants
+27 82 0805 801
tbiggsgeo@gmail.com
2 Valley Road
Hout Bay
Cape Town
7806

BVI CONSULTING ENGINEERS
Edison Square
PO Box 86
Century City
7446

31st August 2020

Email: franciscusg@bviwc.co.za ; cpt@bvi.co.za

ATTENTION: MR FRANCISCUS GREEFF

Dear Sir

BSM39/18-RS-A.45 MAIN ROAD INTERSECTION IMPROVEMENT: REALIGNMENT OF THE R44/R310 AND ALEXANDER STREET JUNCTION, STELLENBOSCH

1. INTRODUCTION AND TERMS OF REFERENCE

Geo Services was appointed by BVI Consulting Engineers to undertake a geotechnical investigation for the proposed Realignment of the R44/R310 and Alexander Street Junction, Stellenbosch. It was requested by Mr Franciscus Greeff of BVI Consulting Engineers, by way of a letter of appointment dated 26th May 2020, (Ref 34092.00C-L-024) that the Stellenbosch Road Alignment be investigated in accordance with the proposal submitted by Geo Services on 6th April 2020. A set of layout plans for the proposed roadworks and details of the required geotechnical services were provided and the scope of work outlined by quotation 555-21-08 from the undersigned, dated the 6th April 2020.

The primary focus of the material investigation was to determine the nature, distribution and geotechnical properties of the shallow soil along the proposed alignment route by studying available geotechnical information and conducting soil profiling's, dynamic cone penetration tests and soil laboratory tests on disturbed samples. Furthermore, to determine the suitability of the transported and in-situ layers for use during construction. This report documents the results of the investigation and provides recommendations on material use for road layer works.

2. AVAILABLE INFORMATION

The following information was used for the purposes of the investigation:

- 1 : 250 000 Geological Series titled "Cape Town 3318" as compiled by the South African Geological Survey, 1986
- Google Earth imagery of the road junction
- Dwg file with 34092.00C-100-02 (Test Pit Setting Out Points), received from Mr. F Greeff
- Project Locality and layout pdf

3. ROUTE DESCRIPTION

The proposed realignment route of the R44/R310 and Alexander Street Junction, Stellenbosch route is orientated south west- north east and is bounded by the Prasa rail-line running parallel to the western side of the road and residential and commercial properties along the eastern side.

Topographically, the road junction is flat and is approximately 134 meters above sea level. The investigation was undertaken over a distance of approximately 500 m.

4. METHODS OF INVESTIGATION

The fieldwork was carried out on 16th July 2020 and comprised the manual excavation of nine trial pits. The test pits were carried out along the alignment and on each side of the road junction to determine the subgrade conditions. In addition, nine dynamic cone penetrometer (DCP) tests were carried out adjacent to the test pits to broadly determine the material properties and compaction characteristics of the underlying materials. Figure 2, Site Plan shows the positions of the test pits and dynamic cone penetrometer tests.

4.1. Test Pits and Soil Profiling

Nine test pits, designated TP1, TP2, TP3, TP4, TP5, TP6, TP8, TP9 and TP10 were excavated at the approximate positions requested by the engineer. The depths ranged from 0.3 m (TP1) to 1.5 m (TP8) below existing ground level, with an average depth of 0.8 m. The original number of test pits required was ten, however due to the shallow soil conditions and numerous high and medium voltage buried cables along the western side of the road TP7 was shifted approximately 5 m westwards where it struck a near surface concrete slab. The positions of several other pits were also shifted to avoid the numerous buried electrical, water and communication services and subsurface concrete slabs. The test pits were profiled by an engineering geologist and profiled in terms of moisture, colour, consistency, structure, soil type/rock type and origin (MCCSSO) according to Jennings et.al (1973). Following the profiling and sampling of the test pits, the disturbed ground was manually backfilled but without proper compaction.

The soil profiles are attached as Appendix A and the positions of the test pits are indicated on Figure 2. TP3 was moved northwards by approximately 10 m from the Alexander Road island.

4.2. Dynamic Cone Penetrometer (DCP) Tests

Nine dynamic cone penetrometer tests, designated DCP1, DCP2, DCP3, DCP4, DCP5, DCP6, DCP8, DCP9 and DCP10 were carried out adjacent to the test pits to depths ranging from 0,3 m (DCP1) to 1,5 m below existing ground level with an average depth of 1,1 m, to broadly determine the CBR values and inferred undrained shear strengths for the road subgrade.

The results of the DCP tests, plotted as blow count versus depth are presented in Appendix B.



Figure 1: Locality map showing sections of road requiring re-alignment (in green).

4.3. Sampling and Laboratory Testing

In order to evaluate the engineering properties of the soils and their suitability as subgrade and fill materials during the construction of road, selected samples were collected from the test pits and submitted for testing to Control Geoscience laboratory, Cape Town. The following laboratory tests were performed in order to determine the geo-mechanical properties of the relevant soil horizons:

- Road and Foundation Indicator Tests
- Mod AASHTO Density Tests
- California Bearing Ratio's (CBR)

The results of the laboratory tests are given in Appendix C and summarised in **Table 2, 3 and 4**.



Figure 2 : Image showing Zones 1 and 2 and trial pit locations. (NB, some positions were shifted slightly due to presence of buried services and concrete slabs).

5. GEOLOGY

The general geology in the Stellenbosch road junction site comprises an underlying layer of fluvial sediment deposited by the Klippies and Jonkershoek Rivers (Eerste River tributaries). These fluvial sediments generally comprise coarse sand and rounded quartzitic boulders and cobbles. The fluvial sediment in-turn overlies Tygerberg Formation (Malmesbury Group) shale (Nt on geological map) and Kuils River Batholith (Cape Granite Suite). Past excavations in the area have exposed paleo channels with incised depths of up to10 m in places (refer to Figure 4, Geological Map).

The site geology comprises a covering layer of colluvial and alluvial sediments with thicknesses ranging between 0.3 m to >1.5 m. Fill material was encountered along the Zone 2, western section of road and within the road islands (TP6 to TP10). The upper 0.25 m generally comprises loose to medium dense, slightly organic, silty sand. This grades into a dense to very dense, slightly clayey, gravelly, silty sand layer with thickness ranging from 0.3 m to 1.5 m. A prominent feature of the site is the 0.3 to 0.5 m thick layer comprising rounded sandstone boulders, cobbles and gravels set in a medium dense to

dense silty sand matrix. This boulder bed is in turn underlain by medium dense to very dense, slightly clayey, silty sand.

The groundwater level ranges in depth from 0.5 m to > 1.5 m below ground level (mbgl) and is expected to experience seasonal variation.

Table 1 Typical empirical values and strength characteristics for soils

COHESIONLESS SOILS

Description	Dry Density (kg/m^3)		N - Value		Relative Density	Soil Modulus E (MPa) Sand Gravel	Sand	Sandy Silt
Very Loose	0	1,450	0	5	<0.2	25	12	6
Loose	1,450	1,600	5	10	0.2 - 0.4	50	25	12
Medium Dense	1,600	1,750	10	30	0.4 - 0.6	100	50	25
Dense	1,750	1,900	30	50	0.6 - 0.8	200	100	50
Very Dense	1,900	2,400	50	100	>0.8	400	200	100

COHESIVE SOILS

Description	Undrained Shear Strength (kN/m^3)		N - Value		Soil Modulus E (MPa) Sandy Silt	Silt	Silty Clay
Very Soft	0	20	0	2	6	3	2
Soft	20	40	2	4	12	6	3
Firm	40	80	4	8	25	12	6
Stiff	80	150	8	15	50	25	12
Very Stiff	150	350	15	30	100	50	25

$UCS = 2\ C_u$ C_u = Undrained shear strength

COMPRESSIBILITY & COLLAPSE

Carter, M and Bentley, S. P., Correlations of Soil Properties, 1991.

Coeff vol. Compr. m_v (m^2/kN)			Trouble Index	Collapse Potential		
V.High Compressibility		1.50E-03	Very Severe	> 20.1%		V.Highly Collapsible
High Compressibility	1.50E-03	3.00E-04	Severe	10.1%	20.0%	Highly Collapsible
Mod. Compressibility	3.00E-04	1.00E-04	Trouble	5.1%	10.0%	Mod. Collapsible
Low Compressibility	1.00E-04	3.00E-05	Mod. Trouble	1.1%	5.0%	Slightly Collapsible
V.Low Compressibilty	3.00E-05	1.00E-05	No problem	< 1%		V.Slightly Collapsible

Table 2 Laboratory test results for each test pit

TEST PIT	TP2	TP3	TP3	TP4	TP9
SAMPLE	32896	32897	32894A	32898	32895
DEPTH (m)	0.35-0.8	0.1-0.4	0.4-09	0.1-0.5	0.8-1.5
DESCRIPTION MATERIAL	Wet, dark brown, dense to very dense, silty clayey SAND (SM-GM) with rounded cobbles and boulders . WT at 0.75m	Slightly moist, dark brown, dense to very dense, silty clayey SAND (SM) with pebbles . WT at 0.9m	Wet, dark brown, dense to very dense, silty gravelly SAND (SM-GM) with cobbles and boulders. WT at 0.9m	Slightly moist, dark brown, medium dense, massive, fine-medium grained, silty clayey SAND (SM), colluvium/Fill . WT at 1.45m	Moist to wet, dark brown, dense becoming very dense,-medium to coarse grained, silty gravelly SAND (SM). Fill. No WT encountered.
Field Consistency	MD	MD	D-VD	MD	MD
Field Moisture	SM-M	SM-M	D-SM	SM	SM
Unified Soil Class	SM	SM	SM-GM	SM	SM
TRH 4 Classification	G7-G8	G8	G6	G7-G8	G6
AASHTO Classification	A-2-4	A-2-4	A-2-4	A-2-4	A-2-4

Table 3: Laboratory test results for each test pit (continued)

SIEVE SIZE (mm)	GRADING ANALYSIS (% PASSING)				
TEST PIT	TP2	TP3	TP3	TP4	TP9
DEPTH (m)	0.35-0.8	0.1-0.4	0.4-09	0.1-0.5	0.8-1.5
53.000			100		100
19.000			97		97
13.200			96		96
4.750	100	100	92	100	93
2.000	99	98	89	99	87
0.425	92	85	75	92	59
0.300	84	74	68	80	52
0.150	5	50	48	46	36
0.075	34	35	30	26	21
0.050	30	26	22	21	18
0.002	10	10	7	6	5
GRAVEL >2.000	1	2	11	1	13
SAND >0.06 < 2.000	68	69	64	76	68
SILT >0.002 <0.06	21	19	18	17	14
CLAY < 0.002	10	10	7	6	5
GRADING MODULUS	**2.25**	**2.18**	**1.94**	**2.17**	**1.67**

Table 4: Laboratory determined soil constraints

TEST PIT	TP2	TP3	TP3	TP4	TP9
DEPTH (m)	0.35-0.8	0.1-0.4	0.4-09	0.1-0.5	0.8-1.5
LIQUID LIMIT	0	15	16	10	15
PLASTIC LIMIT	0	9	10	10	9
PLASTICITY INDEX	0	6	6	0	6
PI (whole ample)	0	4	4	0	3
LINEAR SHRINKAGE	0	2	2	0	2
EXPANSIVENESS	Non	Non	Non	Non	Non
Actual m/c (%)	Non	Non	Non	Non	Non
Max Mod Aashto			2086		2134
OMC (%)			8		7.6
CBR @ 90% MOD			12		13
CBR @ 95% MOD			29		30
CBR @ 100% MOD			70		80
% Swell - 90% MOD			1.5		0.9

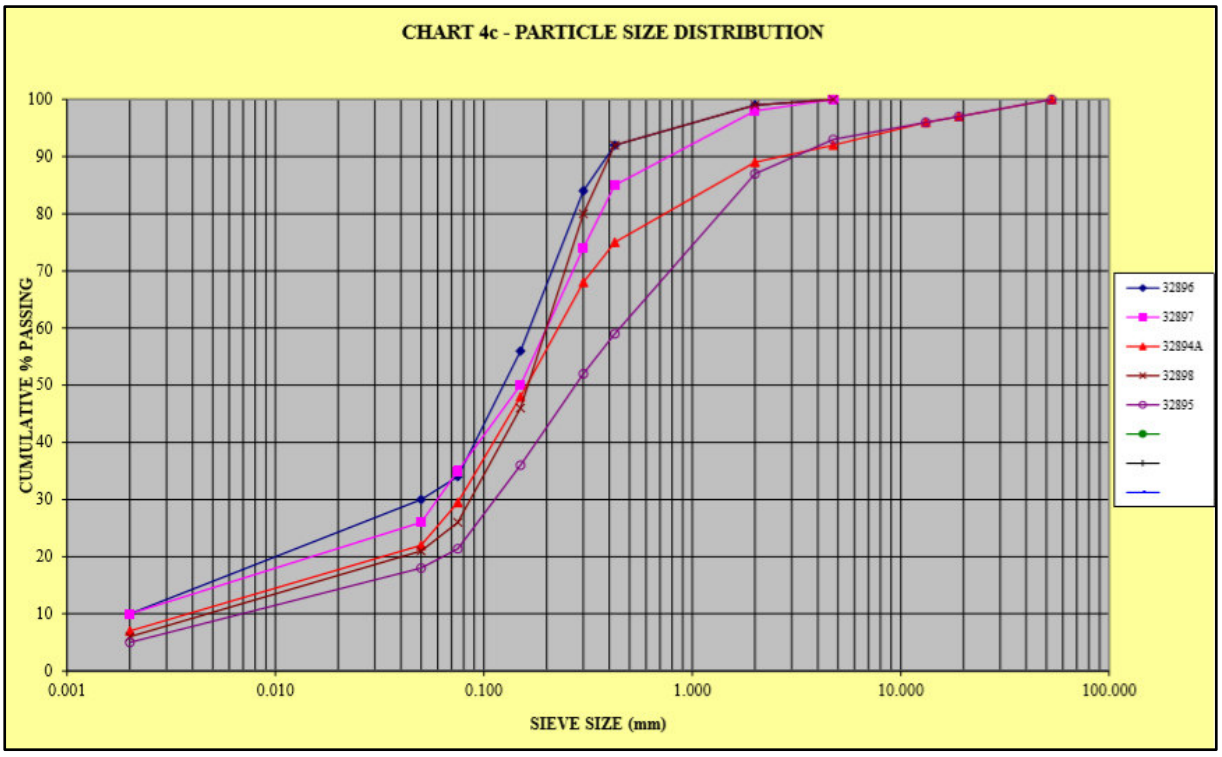

Figure 3 Grain size distribution graph of samples tested

6. SURFACE WATER AND GROUNDWATER

The eastern section of the site (Zone 1: TP1 to TP5,) encountered water seepage at an average depth of 0.75 mbgl. The colluvial and alluvial materials encountered at TP3 and TP5 showed moist to very moist conditions while slow groundwater seepage was encountered in TP1, TP2 and TP4.

No groundwater seepage was encountered in the test pits excavated on the western section of the proposed road alignment (Zone 2), apart from TP6 which showed slow water seepage.

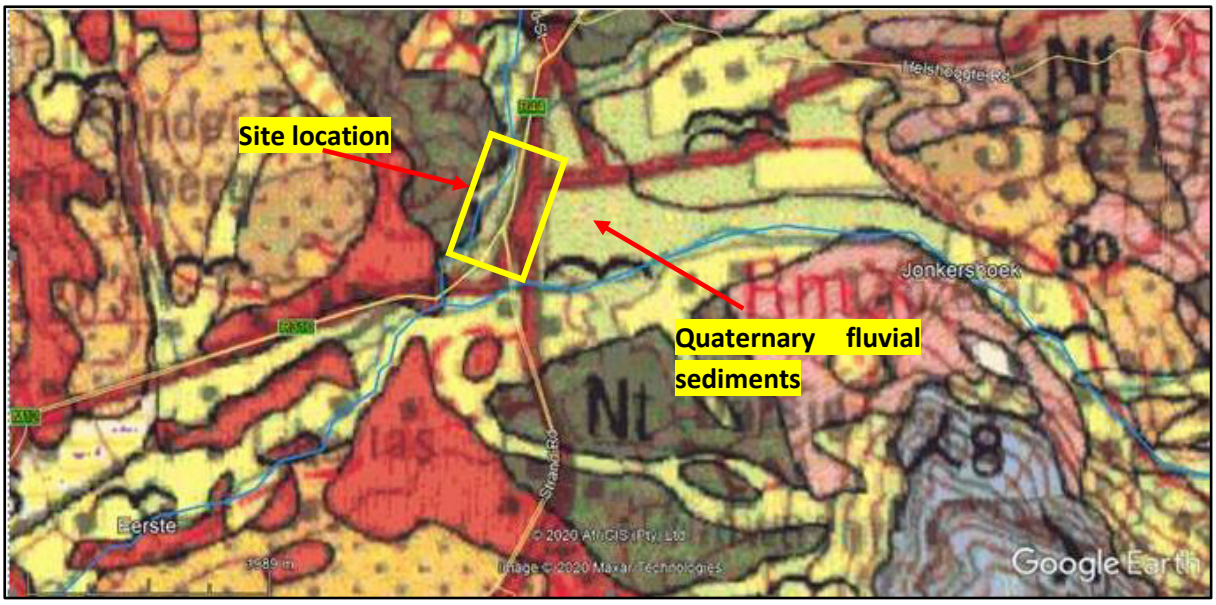

Figure 4: 1:25 000 Geological map of the Stellenbosch area and site location (yellow rectangle). Greyish-brown Nt units represent Tygerberg Formation; pink/orange units represent – Cape Peninsula Batholith; light blue unit– Peninsula Formation and yellow units – represent Quaternary transported / alluvial sediment.

Table 5: categorising the test pits and geology encountered in Zone 1 and Zone 2.

Zone	TP No.	Generalised underlying geology
1	1, 2, 3, 4 & 5	**0 – 0.2 m**: Loose to medium dense organic, silty clayey sand, colluvium. **0.2 – 0.4 m**: Medium dense to dense silty, clayey sand, alluvium. **0.4 – 0.9 m**: Dense to very dense boulder/cobble layer with dense silty sand matrix, alluvium. **0.9 – 1.5 m**: Medium to very dense, slightly clayey, silty gravelly sand, alluvium. **Groundwater:** Average 0.75 mbgl (ranges between 0.45 – 1.45 m)
2	6, 8, 9 & 10	**0 – 0.8 m**: Medium dense to dense silty sand with scattered gravel, Fill. **0.8 – > 1.5 m**: Medium dense to very dense gravelly silty sand, Fill. **Groundwater:** Slow seepage encountered at TP6 (0.4 m), No water encountered in TP8, TP 9, TP 10.

7. DISCUSSION OF SOIL RESULTS AND GEOTECHNICAL ASPECTS

The materials encountered along the route of the proposed road have been classified in terms of their suitability for use in road construction on the basis of field observations and laboratory testing.

It should be borne in mind that the classification, discussion and recommendations of the materials usage below is based on the selected laboratory testing for the samples taken from excavated test pits, in situ field observations and DCP test results and the classifications may vary under actual field conditions.

7.1. Dynamic Cone Penetrometer Tests summary

Hand-held 1,5 m deep Dynamic Cone Penetrometer (DCP) tests were conducted along the proposed road alignment. The DCP test is done by driving a small 60˚ cone into the ground by means of an 8kg guided sliding hammer that is dropped over a height of 1,0m. The penetration is then measured based on the number of blows it takes to drive 0,1m interval of the rod into the ground using the hammer. The DCP value is a crude approximation of the consistency and undrained shear strength of the soil and the in situ inferred CBR values can also be obtained.

Most of the DCP's conducted along the proposed road alignment recorded medium dense to very dense consistencies with refusal occurring at approximately 1.1 m below surface level and TP refusal averaged 0.8 m. The reason for the shallow refusal depths in Zone 1 was due to obstruction by boulders and gravels. It should be noted that DCP results in gravelly, rocky soils may not produce realistic values of consistency and shear strength.

7.2. Excavatability

The excavation characteristics of the different soil horizons have been evaluated according to the South African Bureau of Standards standardised excavation classification for earthworks (SABS – 1200D) and earthworks (small works – SABS 1200DA) as indicated in Table 6 below.

In terms of this classification and the in-situ soil/rock consistencies as profiled, the relationships given below are generally applicable. For specific excavation requirements refer to the soil profiles in Appendix A.

Based on the excavation depths achieved by the manual digging, Soft Excavation Class conditions can be expected for Zone 1 to approximate depths of 0.5 mbgl, and Intermediate Excavation Class conditions can be expected from 0.5 to 1.5 mbgl due to boulders and very dense material at depth.

Soft Excavation Class conditions for Zone 2 sections can also be expected to depths of approximately 1 mbgl and Intermediate Excavation can be expected at depths from 1 m to 1.5 mbgl due to the very dense material at depth and the sporadic occurrences of concrete slabs and fragments. (TP7 and TP9).

7.3. Classification of Materials and Recommended Usage

As discussed above, the route has been zoned as Zone 1, which refers to the open grassed area east of the R310, and Zone 2 which refers to the engineered roadway section west of the R310. The materials encountered in Zone 1 and Zone 2 are classified in Table 7 below.

Zone 1: Contains a high water table in certain sections that will impact the compactability and strength of in-situ and fill materials and will require good pavement layer drainage especially in wet months. If the engineering design requires, in-situ material is cut to spoil and removed to the depth of the dense to very dense boulder/gravelly layer (approximately 0.6 mbgl), the removed material should be stockpiled and used as either selected layer or subgrade material. However, if additional good quality construction base course and upper sub-base materials are required for pavement construction, these will require importing from commercial sources or from an approved and tested borrow pit.

Zone 2: Subgrade materials for the west section of road and the island sections comprise suitable selected layer and/or subgrade construction material. The groundwater levels are on average at least 1.5 mbgl.

Table 6: Excavation classes (SANS 1200D)

SAMPLE POSITION	SIMPLIFIED DESCRIPTION OF TYPICAL MATERIAL PROPERTIES
Soft excavation	*Material that can be efficiently removed or loaded, without prior ripping, by means of a bulldozer, tractor-scraper, track type front-end loader or back-acting excavator without the use of pneumatic tools such as paving breakers.*
Intermediate excavation	*Material that can be efficiently ripped by a bulldozer fitted with a single-tine ripper or with a back-acting excavator of flywheel power exceeding **0,10 kW per mm** of tined-bucket width or the use of pneumatic tools before removal by equipment equivalent to that specified above.*
Hard rock excavation	*Excavation in material that cannot, before removal, be efficiently ripped by a bulldozer. This is material that cannot be efficiently removed without blasting or without wedging and splitting.*
Boulder excavation (Class A)	*Excavation in material containing more than 40 % by volume boulders of size in the range of 0,03-20m3, in a matrix of soft material or smaller boulders.*
Boulder excavation (Class B)	*Excavation in material containing 40 % or less by volume boulders of size in the range of 0,03-20m3, in a matrix of soft material or smaller boulders and which require individual drilling and blasting in order to be loaded by a track type front-end loader or back-acting excavator .*

7.4. Inferred Subgrade Conditions

Zone 1 and 2 subgrade materials are summarised in Table 7 and commented on below. The materials of G6 quality are suitable for use as subbase and/or selected layers. The G7 and G8 materials are suitable for subgrade, selected layer and general fills. For use as selected layers, especially where roads are being widened, it is recommended that materials be compacted to 95 percent modified AASHTO dry density in lifts of 300mm to prevent differential settlement. Any boulders and fragments larger than 2/3 of the layer thickness or 63 mm in diameter (whichever is the smallest) must be removed prior to compaction.

It is recommended that additional laboratory testing be carried out during construction of the proposed road alignment. Table 7 and Table 8 should be used as a guideline for materials usage on construction of pavement structure.

7.5. Bearing Capacity and Expected Settlement

General and broad guidelines of expected bearing capacities, CBR values and expected settlements for different soil consistencies are presented in the tables below. As DCP tests are the basis of the data collected in this investigation, CBR values have been correlated from DCP results and are shown in Table 9 (Du Plessis & Paige-Green, 2009). However, it should be noted that although DCP tests can be used to derive guideline in-situ empirical CBR values, further consolidation and strength testing is recommended for more accurate bearing capacity and settlement results.

Table 7: Recommended Material Usage

Zone	TP No	Description	Classification Details	Recommended Use	Recommended Modifications
IN-SITU SUBGRADE					
Zone 1	TP1 to TP5	Colluvium and alluvium. Silty organic sand. (Depth 0 – 0.2m)	<G9	Not suitable for use in road construction due to organic content grading modulus being less than a value of 0,75.	Material and fill will need to be cut to spoil and replaced with better quality material.
		Alluvium. Silty clayey sand. (Depth 0.2 – 0.5 m)	G7 – G8	Inferred G7 to G8. If G8, then will make an acceptable subgrade, otherwise will need to be undercut and re-placed will better quality material	Mechanical stabilization by addition of tested graded crusher stone or borrow pit soils
		Alluvium, silty gravelly sand. (Depth 0.5 – 1.5 m)	G6 -G7	The deeper alluvial materials encountered in TP3 (below 0,4-0.9m) proved to be of G6 class construction material in quality and may be selectively used as acceptable subgrade or selected layer material. Max size boulders 2/3 layer thickness or 63mm whichever is the smallest,	N/A
Zone 2	TP6 to TP10	Silty sand, Fill. (Depth 0 – 0.8 m)	G7-G8	Inferred G7-G8. If G8, then will make an acceptable subgrade, The deeper fill materials encountered in TP9 (below 0,7m) proved to be of G6 class construction material in quality and may be used as acceptable subgrade and general fills.	N/A
		0.8 – 1.5m: silty gravelly sand, Fill.	G6-G7	Inferred G7 or less. If G7, then will make an acceptable subgrade or selected layer material. The deeper fill materials encountered in TP9 (below 0,7m) proved to be of G6 class construction material in quality and may be used as acceptable subgrade and general fills. Max size boulders 2/3 layer thickness or 63mm whichever is the smallest,	N/A

Table 8 Guideline on materials usage for construction of pavement structure

Material Quality	Recommended Usage
G1 to G4	Suitable for use as base layer
G5 to G6	Suitable for use as subbase
G6 to G8	Suitable for use as selected layer
G8 to G9	Suitable for use as subgrade
<G9	Not suitable for use in road construction

Indicative characteristic settlement and compressibility parameters are shown below in Table 10 **Note**: the figures for typical rock/soil properties in Table 10 have been developed by experienced practitioners but have not been published.

During the site investigations an inspection of the current road condition was carried out and no visible signs of settlement or cracks were evident. Discussions regarding the original road design and construction were held with the site engineer who confirmed that no problems had arisen due to

excessive settlement or bearing capacity. The subgrade soils will tend to undergo immediate or rapid settlement due to the predominantly granular nature of the soils.

7.6. Table 9: Guidelines for correlated CBR values for different soil consistencies

Cohesionless Soil Consistency	DN Value (mm/blow)	CBR
Loose	75 - 30	< 5
Medium Dense	30 - 12.5	5 - 17
Dense	12.5 - 5	17 - 53
Very dense	< 5	> 53

Table 10 Typical empirical soil properties and bearing capacities

COMPRESSIBILITY & COLLAPSE

Carter, M and Bentley, S. P., Correlations of Soil Properties, 1991.

	Coeff vol. Compr. m_v (m^2/kN)		Trouble Index	Collapse Potential		
V.High Compressibility		1.50E-03	Very Severe	> 20.1%		V.Highly Collapsible
High Compressibility	1.50E-03	3.00E-04	Severe	10.1%	20.0%	Highly Collapsible
Mod. Compressibility	3.00E-04	1.00E-04	Trouble	5.1%	10.0%	Mod. Collapsible
Low Compressibility	1.00E-04	3.00E-05	Mod. Trouble	1.1%	5.0%	Slightly Collapsible
V.Low Compressibilty	3.00E-05	1.00E-05	No problem	< 1%		V.Slightly Collapsible

TYPICAL ROCK/SOIL PROPERTIES & ESTIMATED BEARING CAPACITES

Rock / Soil Density Description	UCS (MPa)	Bearing Capacity	Mod. Ratio	E_d (MPa)	Friction Angle ϕ'	Cohesion Cu / C'	N-Value	Dry Unit Wt kg/m^3
Extremely hard rock	200	Function of UCS & jointing intensity (j)	600	120,000	Rock joint / structure friction	Rock joint / structure cohesion	Refer to Schmidt hardness or point load index	> 40
Very hard rock	150		450	67,500				35 - 40
Hard rock	100		375	37,500				30 - 35
Medium hard rock	50		325	16,250				27 - 30
Soft rock	10		300	3,000	Rock mass friction	Rock mass cohesion		25 - 27
Very soft rock	1		275	275				23 - 25
Very hard soil/decomp.	0.5		250	125			> 80	21.5 - 23
Very dense sand/gravel		400	250	100	44	-	50 - 80	19.5-21.5
Very dense silt/sand		300	225	68	40	-		
Very stiff clay/silt		200	200	40	22	80 / 15	15-30	17.5
Dense sand/gravel		300	225	68	40	-	30-50	17.5-19.5
Dense silt/sand		200	200	40	36	-		
Stiff clay/silt		150	175	26	20	40 / 10	8 - 15	15.5-17.5
Medium dense sand/gravel		200	200	40	36	-	10 - 30	15.5-17.5
Medium dense silt/sand		150	175	26	32	-		
Firm clay/silt		75	150	11	18	20 / 5	4 - 8	14.0-15.5
Loose sand/gravel		150	175	26	32	-	5 - 10	14.0-15.5
Loose silt/sand		75	150	11	28	-		
Soft clay/silt		35	125	4	17	10 / 2	2 - 4	12.5-14.0
Very loose sand/gravel		75	150	11	28	-	<5	<14.0
Very loose silt/sand		35	125	4	24	-		
Very soft clay/silt		20	100	2	16	<5 / 0	<2	<12.5

8. CONCLUSION

This report presents the findings of a material investigation for the construction of the proposed realignment of the R44/R310 and Alexander Street junction in Stellenbosch. The total length of the proposed roadworks is approximately 300 to 400 m.

The route is underlain by both colluvial, alluvial and fill materials. These are in-turn underlain by residual soils and weathered shales of the Tygerberg Formation. The soils encountered across the site comprise largely of silty clayey sands and silty gravelly sands, all of which are suitable for use as either subgrade, selected layer or subbase materials. A dominant boulder bed was encountered in the eastern section of the site at approximate depths of 0.6m below ground level. The soils were generally non expansive with low swell percentages and low plasticity.

Moderate groundwater seepage was encountered in Zone 1 test pits (TP1 to TP5) at an average depth of 0.7 mgbl, and slow seepage was encountered in TP6 (Zone 2) at a depth of 0.45 m below existing ground level.

Of significance are the high groundwater levels in Zone 1 which will require adequate provision for subsoil drainage and surface run off to prevent ingress of water into the layerworks.

It is considered that soft excavations class conditions in terms of SABS 1200 can be anticipated in Zone 1 to depths of 0.5 mbgl and intermediate excavations boulder excavation class conditions can be expected from 0.6 m to in excess of 1,5 mbgl. In Zone2, soft excavations class conditions and be expected to depths of 1 m and intermediate excavations class conditions from 1 m to 1.5 mbgl.

Finally, the soil conditions described in this report refer specifically to those encountered at the test pits and DCP tests carried out along the route. It is therefore possible that conditions at variance with those discussed above may be encountered elsewhere along the road section in question. In this regard it is important that a specialist carry out periodic inspections of the road during construction to ensure that any variation in the anticipated ground conditions can be assessed and revised recommendations made to avoid unnecessary delays and expense.

We trust that this meets your immediate requirements in terms of in-situ conditions, classification of materials and development recommendations. However, should you have any queries please do not hesitate to contact us in this regard.

Yours faithfully,

Tim Biggs



(Electronic Signature) Date: 31 August 2020

Engineering Geologist Pr.Sci.Nat.

Geo Services Consultants

9. BIBLIOGRAPHY

1. JENNINGS, J.E., BRINK, A.B.A. & WILLIAMS, A.A.B. Revised Guide to Soil Profiling for Civil Engineering Purposes in Southern Africa. Trans. SA. Inst. Civil Engrs. Vol.15, No.1, 1973.
2. BRINK, A.B.A. Engineering Geology of Southern Africa. Volume 1 - The First 2000 Million Years of Geological Time, Building Publications, Pretoria, 1981, 319pp.
3. BRAJA, M. DAS. Principles of Geotechnical Engineering. 3rd Ed., PWS Publishing Co., Boston, 1993, 662pp.
4. WEAVER, J.M. Geological Factors Significant in the Assessment of Rippability. The Civil Engineer in S. Africa, December 1975, pp 313-316.
5. SABS 1200D Earthworks: Standardised Specification For Civil Engineering Construction. 1982.
6. TRH 14: 1985. Guidelines for Road Construction Materials. Dept. of Transport South Africa. Committee of State Road Authorities, Technical Recommendations for Highways. Pretoria, pp 57. Reprint 1989.
7. SOUTH AFRICAN INSTITUTE OF CIVIL ENGINEERS - Code of Practice: Foundations and Superstructures for Single Storey Residential Buildings of Masonry Construction; Joint Structural Division, 1995, Johannesburg.
8. SOUTH AFRICAN INSTITUTE of ENGINEERING GEOLOGISTS - Guidelines for Urban Engineering Geological Investigations; Pretoria 1997; South Africa.
9. DU PLESSIS, L., & PAIGE-GREEN, P. (2009). The use and interpretation of the dynamic cone penetrometer (DCP) test. Pretoria: CSIR Built Environment.

APPENDIX A: SOIL PROFILE

GEO SERVICES
Geotechnical Consultants

TEST PIT LOG

TEST NO: **TP01**

PROJECT: Stellenbosch Road Upgrade
NORTHING: 13,656.853
START DATE: 15/07/20

PROJECT NO: TB2001
EASTING: 3,756,662.416
END DATE: 15/07/20

LOCATION: Intersection Strand/Adam Tas/Alexander Rds
ELEVATION: 0.0
LOGGED BY: T Biggs

DEPTH (m)	DCP (mm/ Blow) Blows 100	SAMPLE No. & TEST	PROFILE	MATERIAL DESCRIPTION	USCS	DPL / DPSH BLOWS PER 30cm	REMARKS
0.0	11			Colluvium: Slightly moist, dark brown, medium dense, organic, rooted, silty SAND with pebbles (rounded).	SM		
	22						
	13			Alluvium Gr: Moist, dark brown, dense to very dense, rooted, silty SAND with cobbles and pebbles (rounded, slightly weathered SST).	SM_ GM		Seepage - watertable at 0.65m
0.5	4						
1.0							
1.5							



CONTRACTOR: Static text - name
GWL DEPTH: 0.65
DRILLER/OPERATOR: Static text - operator
MACHINE USED: Hand dug

SANDY MATERIALS

Description	Relative Density %	SPT N-value (blows/300mm)	DCP (mm/blow)
Very loose		<4	>75
Loose	0 - 40	4 - 10	30 - 75
Medium dense	40 - 70	10 - 30	12.5 - 30
Dense	70 - 90	30 - 50	5 - 12.5
Very dense	90 - 100	>50	<5

GEO SERVICES
Geotechnical Consultants

TEST PIT LOG

TEST NO: **TP02**

PROJECT: Realignment R44/R310/Alexander St Junction **NORTHING:** 13,717.74 **START DATE:** 16/07/2020

PROJECT NO: 20200716-054 **EASTING:** 3,756,693.112 **END DATE:** 16/07/2020

LOCATION: Intersection Strand/Adam Tas/Alexander Rds **ELEVATION:** 0.0 **LOGGED BY:** T Biggs

DEPTH (m)	DCP (mm/ Blow) Blows 0 100	SAMPLE No. & TEST	PROFILE	MATERIAL DESCRIPTION	USCS	DPL / DPSH BLOWS PER 30cm	REMARKS
0.0	22	0.2 FI		Colluvium: Slightly moist, dark brown, medium dense, organic, rooted, silty SAND with rounded pebbles	SM		
	21	0.3					
	34						
	8	0.4 FI		Alluvium Gr: Wet, dark brown, dense to very dense, rooted, silty SAND with rounded, sl weathered SST cobbles and boulders	SM_ GM		0.75m - Seepage - Watertable
0.5	14						
	30						
	4	0.7					EOH - 0.85m
	10						
	12						
	6						

CONTRACTOR: Static text - name **GWL DEPTH:** 0.75

DRILLER/OPERATOR: Static text - operator

MACHINE USED: TLB

SANDY MATERIALS

Description	Relative Density %	SPT N-value (blows/300mm)	DCP (mm/blow)
Very loose		<4	>75
Loose	0 - 40	4 - 10	30 - 75
Medium dense	40 - 70	10 - 30	12.5 - 30
Dense	70 - 90	30 - 50	5 - 12.5
Very dense	90 - 100	>50	<5

GEO SERVICES
Geotechnical Consultants

TEST PIT LOG

TEST NO: **TP03**

PROJECT: Realignment R44/R310/Alexander St Junction **NORTHING:** 13,743.14 **START DATE:** 15/07/2020

PROJECT NO: 20200716-054 **EASTING:** 3,756,634.114 **END DATE:** 15/07/2020

LOCATION: Intersection Strand/Adam Tas/Alexander Rds **ELEVATION:** 0.0 **LOGGED BY:** T Biggs

DEPTH (m)	DCP (mm/ Blow) Blows 0 100	SAMPLE No. & TEST	PROFILE	MATERIAL DESCRIPTION	USCS	DPL / DPSH BLOWS PER 30cm	REMARKS
0.0	22			Colluvium: Slightly moist, dark brown, medium dense, organic, rooted, fine to medium grained, silty SAND. Colluvium/Fill	SM		
	31						
0.3	40	FI					
0.5	12	0.5		Alluvium + Cobbles: Wet, yellow brown, dense to very dense, rooted, silty, clayey SAND with cobbles and boulders (rounded, slightly weathered SST). Alluvium. EOH: Refusal	SM_ GM		0.9m - Seepage - Watertable
	1	RI/MOD/ CBR					EOH - 0.9m
0.9	1						
1.0							

CONTRACTOR: Static text - name **GWL DEPTH:** 0.9

DRILLER/OPERATOR: Static text - operator

MACHINE USED: Hand dug

SANDY MATERIALS

Description	Relative Density %	SPT N-value (blows/300mm)	DCP (mm/blow)
Very loose		<4	>75
Loose	0 - 40	4 - 10	30 - 75
Medium dense	40 - 70	10 - 30	12.5 - 30
Dense	70 - 90	30 - 50	5 - 12.5
Very dense	90 - 100	>50	<5

GEO SERVICES
Geotechnical Consultants

TEST PIT LOG

TEST NO: **TP04**

PROJECT: Realignment R44/R310/Alexander St Junction **NORTHING:** 13,696.222 **START DATE:** 15/07/2020

PROJECT NO: 20200716-054 **EASTING:** 3,756,658.091 **END DATE:** 15/07/2020

LOCATION: Intersection Strand/Adam Tas/Alexander Rds **ELEVATION:** 0.0 **LOGGED BY:** T Biggs

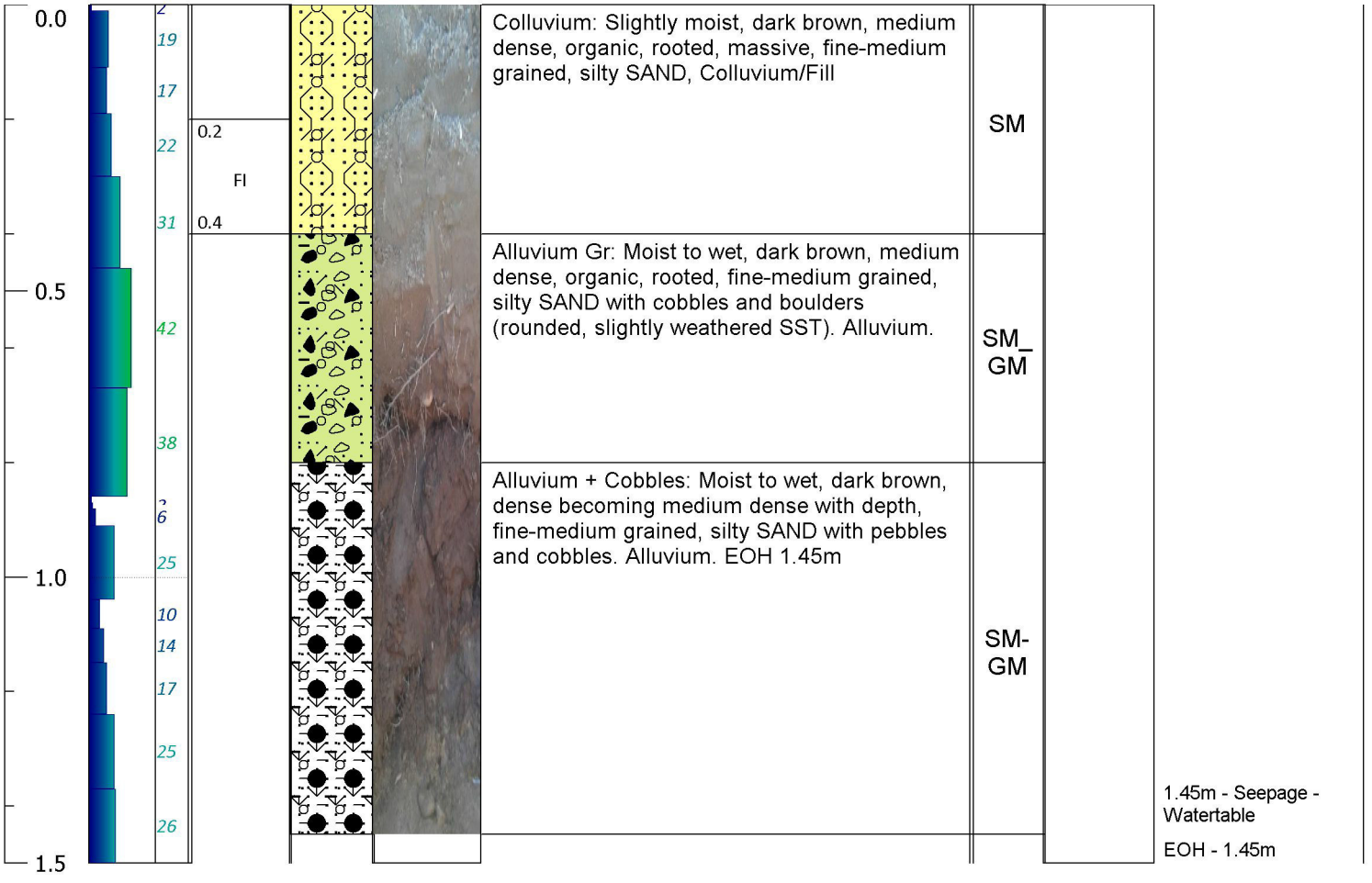

DEPTH (m)	DCP (mm/ Blow)	SAMPLE No. & TEST	PROFILE	MATERIAL DESCRIPTION	USCS	DPL / DPSH BLOWS PER 30cm	REMARKS
0.0	Blows 0 100			Colluvium: Slightly moist, dark brown, medium dense, organic, rooted, massive, fine-medium grained, silty SAND, Colluvium/Fill	SM		
0.2		FI					
0.4				Alluvium Gr: Moist to wet, dark brown, medium dense, organic, rooted, fine-medium grained, silty SAND with cobbles and boulders (rounded, slightly weathered SST). Alluvium.	SM_ GM		
				Alluvium + Cobbles: Moist to wet, dark brown, dense becoming medium dense with depth, fine-medium grained, silty SAND with pebbles and cobbles. Alluvium. EOH 1.45m	SM-GM		1.45m - Seepage - Watertable EOH - 1.45m

CONTRACTOR: Static text - name

DRILLER/OPERATOR: Static text - operator

MACHINE USED: Hand dug

GWL DEPTH: 1.45

SANDY MATERIALS

Description	Relative Density %	SPT N-value (blows/300mm)	DCP (mm/blow)
Very loose		<4	>75
Loose	0 - 40	4 - 10	30 - 75
Medium dense	40 - 70	10 - 30	12.5 - 30
Dense	70 - 90	30 - 50	5 - 12.5
Very dense	90 - 100	>50	<5

GEO SERVICES
Geotechnical Consultants

TEST PIT LOG

TEST NO: **TP05**

PROJECT: Realignment R44/R310/Alexander St Junction
NORTHING: 13,663.004
START DATE: 15/07/2020

PROJECT NO: 20200716-054
EASTING: 3,756,576.826
END DATE: 15/07/2020

LOCATION: Intersection Strand/Adam Tas/Alexander Rds
ELEVATION: 0.0
LOGGED BY: T Biggs

DEPTH (m)	DCP (mm/ Blow)	SAMPLE No. & TEST	PROFILE	MATERIAL DESCRIPTION	USCS	DPL / DPSH BLOWS PER 30cm	REMARKS
0.0	Blows 0 100			Colluvium: Moist, brown, loose to medium dense, organic, rooted, fine-medium grained, slightly clayey, silty SAND, Colluvium/Fill	SM		
0.5				Colluvium: Moist to wet, brown, medium dense, medium-coarse- grained, silty SAND with pebbles.Colluvium. EOH 0.5m	SM		Seepage - G/W at approx 0.45m EOH - 0.5m
1.0							
1.5							

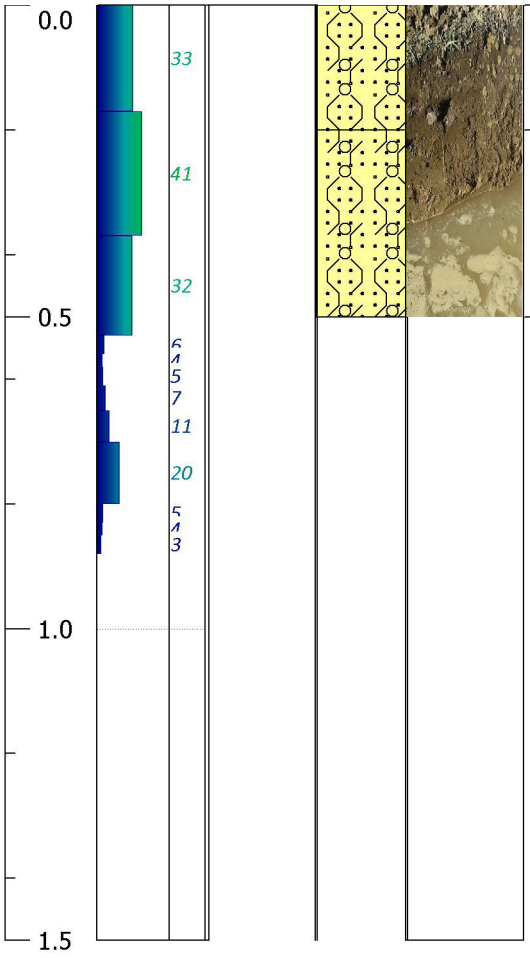

CONTRACTOR: Static text - name
GWL DEPTH:
DRILLER/OPERATOR: Static text - operator
MACHINE USED: Hand dug

SANDY MATERIALS

Description	Relative Density %	SPT N-value (blows/300mm)	DCP (mm/blow)
Very loose		<4	>75
Loose	0 - 40	4 - 10	30 - 75
Medium dense	40 - 70	10 - 30	12.5 - 30
Dense	70 - 90	30 - 50	5 - 12.5
Very dense	90 - 100	>50	<5

GEO SERVICES
Geotechnical Consultants

TEST PIT LOG

TEST NO: **TP06**

PROJECT: Realignment R44/R310/Alexander St Junction **NORTHING:** 13,686.91 **START DATE:** 15/07/2020

PROJECT NO: 20200716-054 **EASTING:** 3,756,592.536 **END DATE:** 15/07/2020

LOCATION: Intersection Strand/Adam Tas/Alexander Rds **ELEVATION:** 0.0 **LOGGED BY:** T Biggs

DEPTH (m)	DCP (mm/ Blow) Blows 100	SAMPLE No. & TEST	PROFILE	MATERIAL DESCRIPTION	USCS	DPL / DPSH BLOWS PER 30cm	REMARKS
0.0	54		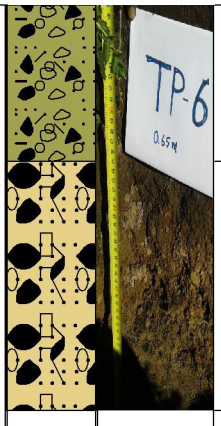	Fill2: Moist, grey brown, loose to medium dense,organic, rooted, medium to coarse grained, slightly clayey, silty SAND	SM		
	24			Fill1: Moist, yellow brown, medium dense becoming dense with depth, slightly clayey, silty SAND. Fill. EOH 0.65m, refusal	SM		
0.5	13 4 6 6 7 14 3 18						EOH - 0.65m
1.0							
1.5							

CONTRACTOR: Static text - name

DRILLER/OPERATOR: Static text - operator

MACHINE USED: Hand dug

GWL DEPTH:

SANDY MATERIALS

Description	Relative Density %	SPT N-value (blows/300mm)	DCP (mm/blow)
Very loose		<4	>75
Loose	0 - 40	4 - 10	30 - 75
Medium dense	40 - 70	10 - 30	12.5 - 30
Dense	70 - 90	30 - 50	5 - 12.5
Very dense	90 - 100	>50	<5

GEO SERVICES
Geotechnical Consultants

TEST PIT LOG

TEST NO: **TP08**

PROJECT: Realignment R44/R310/Alexander St Junction **NORTHING:** 13,758.249 **START DATE:** 15/07/2020

PROJECT NO: 20200716-054 **EASTING:** 3,756,693.642 **END DATE:** 15/07/2020

LOCATION: Intersection Strand/Adam Tas/Alexander Rds **ELEVATION:** 0.0 **LOGGED BY:** T Biggs

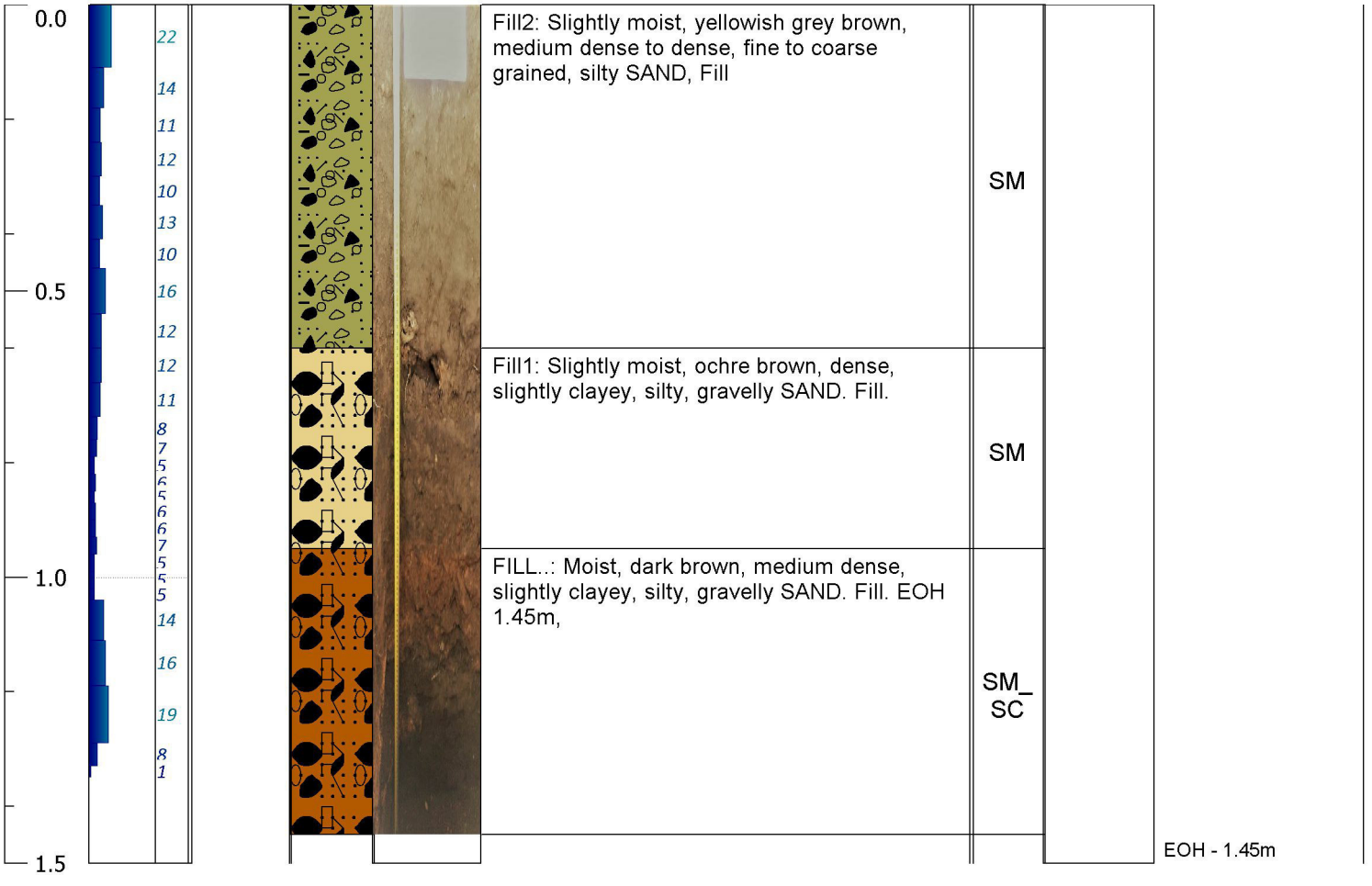

DEPTH (m)	DCP (mm/ Blow) Blows 0 100	SAMPLE No. & TEST	PROFILE	MATERIAL DESCRIPTION	USCS	DPL / DPSH BLOWS PER 30cm	REMARKS

CONTRACTOR: Static text - name

DRILLER/OPERATOR: Static text - operator

MACHINE USED: Hand dug

GWL DEPTH:

SANDY MATERIALS

Description	Relative Density %	SPT N-value (blows/300mm)	DCP (mm/blow)
Very loose		<4	>75
Loose	0 - 40	4 - 10	30 - 75
Medium dense	40 - 70	10 - 30	12.5 - 30
Dense	70 - 90	30 - 50	5 - 12.5
Very dense	90 - 100	>50	<5

GEO SERVICES
Geotechnical Consultants

TEST PIT LOG

TEST NO: **TP09**

PROJECT: Realignment R44/R310/Alexander St Junction **NORTHING:** 13,758.249 **START DATE:** 15/07/2020

PROJECT NO: 20200716-054 **EASTING:** 3,756,729.276 **END DATE:** 15/07/2020

LOCATION: Intersection Strand/Adam Tas/Alexander Rds **ELEVATION:** 0.0 **LOGGED BY:** T Biggs

DEPTH (m)	DCP (mm/ Blow) Blows 0 100	SAMPLE No. & TEST	PROFILE	MATERIAL DESCRIPTION	USCS	DPL / DPSH BLOWS PER 30cm	REMARKS
0.0				Fill2: Slightly moist, grey brown, medium dense, organic, rooted, fine-medium grained, slightly clayey, silty SAND, with pebbles and rubble fragments, Fill.	SM		
0.5							
1.0				FILL..: Moist to wet, dark brown, dense becoming very dense,-medium to coarse grained SAND with cobbles and boulders (rounded, slightly weathered SST).Fill.(concrete slab against sidewall) EOH: Refusal.	SM		
1.5							EOH - 1.5m

CONTRACTOR: Static text - name

DRILLER/OPERATOR: Static text - operator

MACHINE USED: Hand dug

GWL DEPTH:

SANDY MATERIALS

Description	Relative Density %	SPT N-value (blows/300mm)	DCP (mm/blow)
Very loose		<4	>75
Loose	0 - 40	4 - 10	30 - 75
Medium dense	40 - 70	10 - 30	12.5 - 30
Dense	70 - 90	30 - 50	5 - 12.5
Very dense	90 - 100	>50	<5

GEO SERVICES
Geotechnical Consultants

TEST PIT LOG

TEST NO: **TP10**

PROJECT: Realignment R44/R310/Alexander St Junction **NORTHING:** 13,730.666 **START DATE:** 15/07/2020

PROJECT NO: 20200716-054 **EASTING:** 3,756,798.454 **END DATE:** 15/07/2020

LOCATION: Intersection Strand/Adam Tas/Alexander Rds **ELEVATION:** 0.0 **LOGGED BY:** T Biggs

DEPTH (m)	DCP (mm/ Blow) Blows 0 100	SAMPLE No. & TEST	PROFILE	MATERIAL DESCRIPTION	USCS	DPL / DPSH BLOWS PER 30cm	REMARKS
0.0	23			Fill2: Moist, grey brown, medium dense, rooted, slightly clayey, silty SAND,Fill.	SM		
	32						
	18			Fill1: Moist, orangey brown, medium dense to dense, coarse, silty SAND, Fill	SM		
0.5	9 8 9 9						
	13						
	13						
	17						
	11						
	17			FILL..: Slightly moist, dark brown, dense becoming very dense,-medium to coarse grained, SAND with cobbles (at bottom of TP). Fill. EOH:1.5m, Refusal.	SM		
	15						
1.0	6 9 5 2						
1.5							EOH - 1.5m

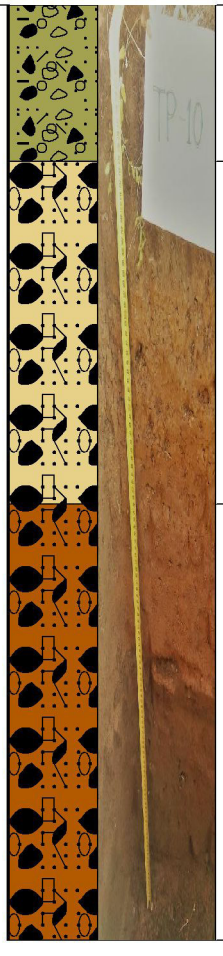

PAGE 1 OF 1

CONTRACTOR: Static text - name

DRILLER/OPERATOR: Static text - operator

MACHINE USED: Hand dug

GWL DEPTH:

SANDY MATERIALS

Description	Relative Density %	SPT N-value (blows/300mm)	DCP (mm/blow)
Very loose		<4	>75
Loose	0 - 40	4 - 10	30 - 75
Medium dense	40 - 70	10 - 30	12.5 - 30
Dense	70 - 90	30 - 50	5 - 12.5
Very dense	90 - 100	>50	<5

APPENDIX B: DCP RESULTS

DCP 1

Number of Blows	Penetration per Blow (mm/blow)	Corrected Depth (cm)	Classification
0			
5	11	5.6	Dense
10	22	16.6	Medium Dense
15	13	23.2	Medium Dense
20	2	24.3	V. Dense
25	2	25.3	V. Dense
30	4	27.3	V. Dense
35			
40			
45			
50			
55			
60			
65			
70			
75			
80			
85			
90			
95			
100			
105			
110			
115			

SOIL CONSISTENCIES: SPT N- Value vs DCP

CONSISTENCY	SPT (blows /300mm)	DCP (mm/blow)
Very loose	<4	>75
Loose	4- 10	30 – 75
Medium dense	10 – 30	12.5 – 30
Dense	30 - 50	5 – 12.5
Very dense	>50	2 - 5

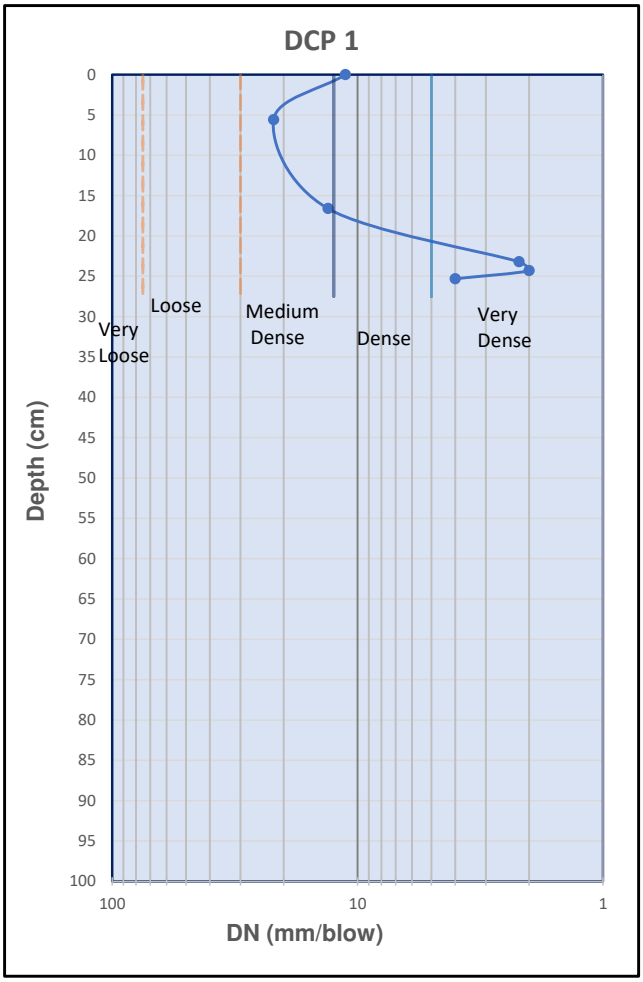

DCP 2

Number of Blows	Penetration per Blow (mm/blow)	Corrected Depth (cm)	Classification
0			
5	22	10.8	Medium Dense
10	21	21.2	Medium Dense
15	34	38	Loose
20	8	42	Dense
25	14	49	Medium Dense
30	30	63.8	Medium Dense
35	5	66.1	V. Dense
40	4	67.9	V. Dense
45	3	69.5	V. Dense
50	3	71	V. Dense
55	2	72.1	V. Dense
60	4	74	V. Dense
65	10	78.9	Dense
70	12	85	Dense
75	6	88	Dense
80			
85			
90			
95			
100			
105			
110			
115			

SOIL CONSISTENCIES: SPT N- Value vs DCP

CONSISTENCY	SPT (blows /300mm)	DCP (mm/blow)
Very loose	<4	>75
Loose	4- 10	30 – 75
Medium dense	10 – 30	12.5 – 30
Dense	30 - 50	5 – 12.5
Very dense	>50	2 - 5

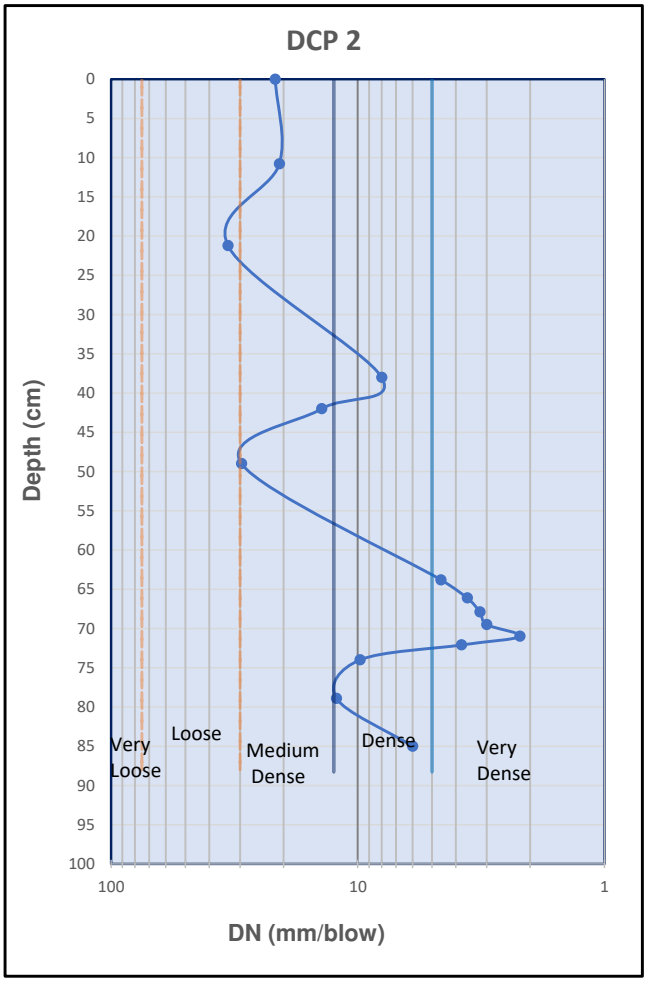

DCP 3

Number of Blows	Penetration per Blow (mm/blow)	Corrected Depth (cm)	Classification
0			
5	22	11	Medium Dense
10	31	26.6	Loose
15	40	46.5	Loose
20	12	52.5	Dense
25	1	53	V. Dense
30	1	53.5	V. Dense
35			
40			
45			
50			
55			
60			
65			
70			
75			
80			
85			
90			
95			
100			
105			
110			
115			

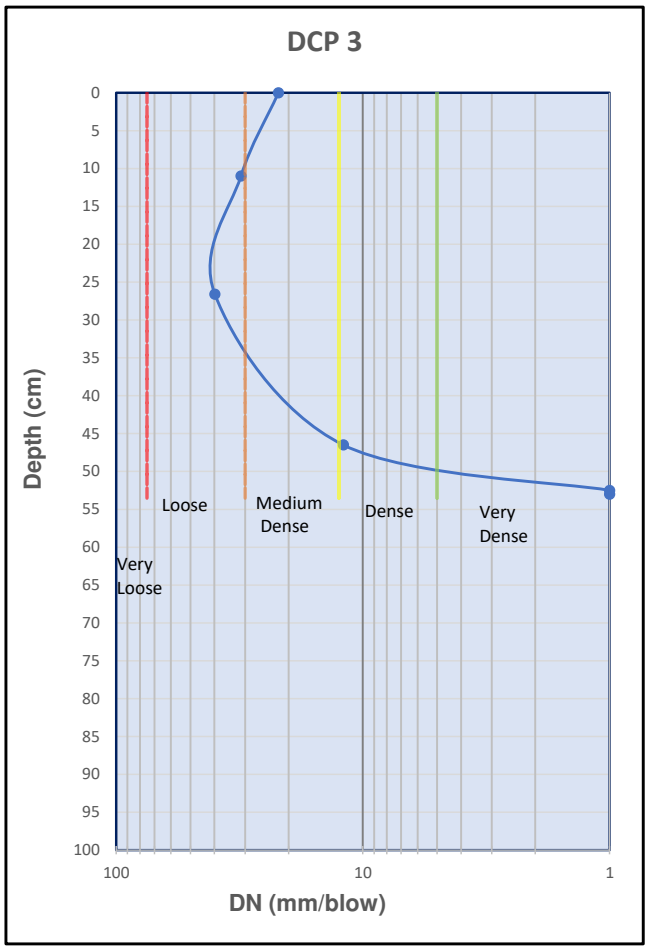

SOIL CONSISTENCIES: SPT N- Value vs DCP

CONSISTENCY	SPT (blows /300mm)	DCP (mm/blow)
Very loose	<4	>75
Loose	4- 10	30 – 75
Medium dense	10 – 30	12.5 – 30
Dense	30 - 50	5 – 12.5
Very dense	>50	2 - 5

DCP 4

Number of Blows	Penetration per Blow (mm/blow)	Corrected Depth (cm)	Classification
0			
5	2	0.9	V. Dense
10	19	10.6	Medium Dense
15	17	19	Medium Dense
20	22	30	Medium Dense
25	31	45.5	Loose
30	42	66.7	Loose
35	38	85.5	Loose
40	2	86.5	V. Dense
45	3	88	V. Dense
50	6	91	Dense
55	25	103.5	Medium Dense
60	10	108.5	Dense
65	14	115.3	Medium Dense
70	17	124	Medium Dense
75	25	136.6	Medium Dense
80	26	149.7	Medium Dense
85	27	163.2	Medium Dense
90	28	177	Medium Dense
95	28	191	Medium Dense
100	29	205.5	Medium Dense
105	29	220.1	Medium Dense
110			
115			

SOIL CONSISTENCIES: SPT N- Value vs DCP

CONSISTENCY	SPT (blows /300mm)	DCP (mm/blow)
Very loose	<4	>75
Loose	4- 10	30 – 75
Medium dense	10 – 30	12.5 – 30
Dense	30 - 50	5 – 12.5
Very dense	>50	2 - 5

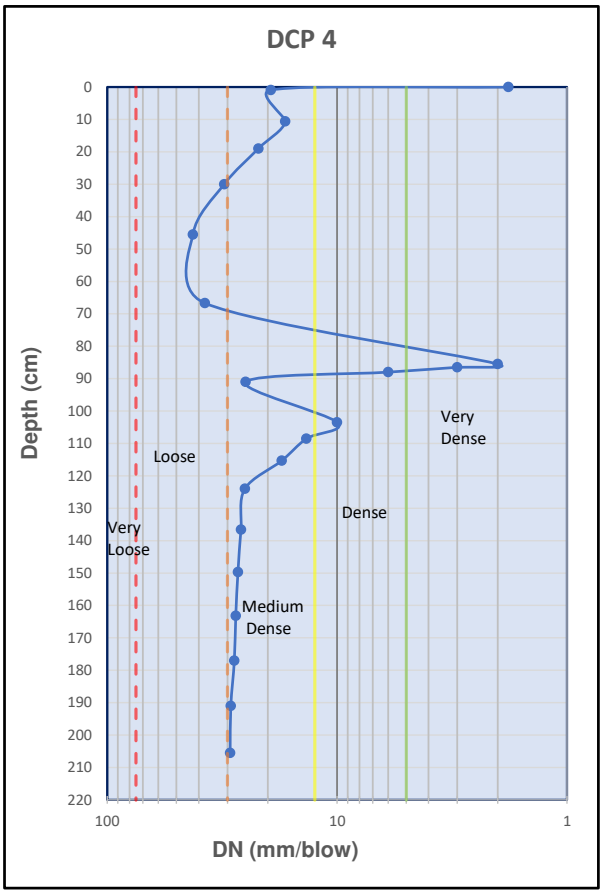

0.01
0.11
0.19
0.30
0.46
0.67
0.86
0.87
0.88
0.91
1.04
1.09
1.15
1.24
1.37
1.50
1.63
1.77
1.91
2.06
2.20

DCP 5

Number of Blows	Cumulative Penetration (cm)	Penetration per Blow (cm/blow)	Penetration per Blow (mm/blow)	Type of Hammer (kg)	Corrected Depth (cm)	Classification
0	0					
5	16.5	3.30	33	8	16.5	Loose
10	37	4.10	41	8	37	Loose
15	53	3.20	32	8	53	Loose
20	56	0.60	6	8	56	Dense
25	58.2	0.44	4	8	58.2	V. Dense
30	60.9	0.54	5	8	60.9	Dense
35	64.5	0.72	7	8	64.5	Dense
40	70.2	1.14	11	8	70.2	Dense
45	80.0	1.96	20	8	80	Medium Dense
50	82.6	0.52	5	8	82.6	Dense
55	84.6	0.40	4	8	84.6	V. Dense
60	86.0	0.28	3	8	86	V. Dense
65						
70						
75						
80						
85						
90						
95						
100						
105						
110						
115						

SOIL CONSISTENCIES: SPT N- Value vs DCP

CONSISTENCY	SPT (blows /300mm)	DCP (mm/blow)
Very loose	<4	>75
Loose	4- 10	30 – 75
Medium dense	10 – 30	12.5 – 30
Dense	30 - 50	5 – 12.5
Very dense	>50	2 - 5

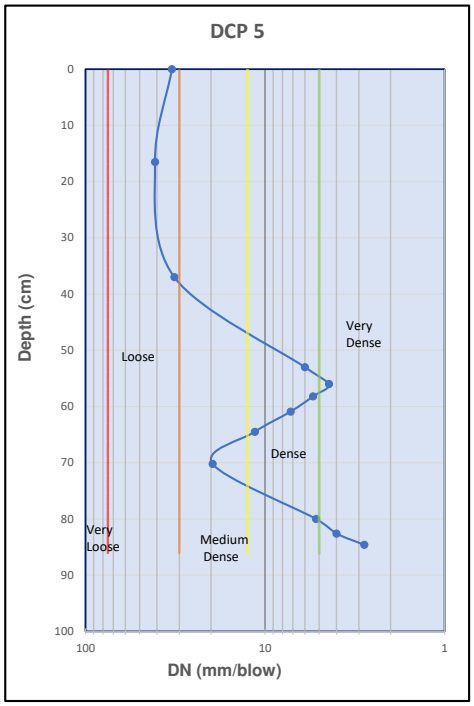

0.00
0.17
0.37
0.53
0.56
0.58
0.61
0.65
0.70
0.80
0.83
0.85
0.86

DCP 6

Number of Blows	Penetration per Blow (mm/blow)	Corrected Depth (cm)	Classification
0			
5	54	27	Loose
10	24	39.2	Medium Dense
15	13	45.6	Medium Dense
20	6	48.5	Dense
25	3	50.2	V. Dense
30	3	51.9	V. Dense
35	2	53	V. Dense
40	2	54	V. Dense
45	3	55.6	V. Dense
50	2	56.8	V. Dense
55	3	58.4	V. Dense
60	3	60	V. Dense
65	2	61	V. Dense
70	4	63	V. Dense
75	4	65	V. Dense
80	6	68	Dense
85	6	71	Dense
90	7	74.5	Dense
95	14	81.5	Medium Dense
100	3	83	V. Dense
105	18	92	Medium Dense
110			
115			

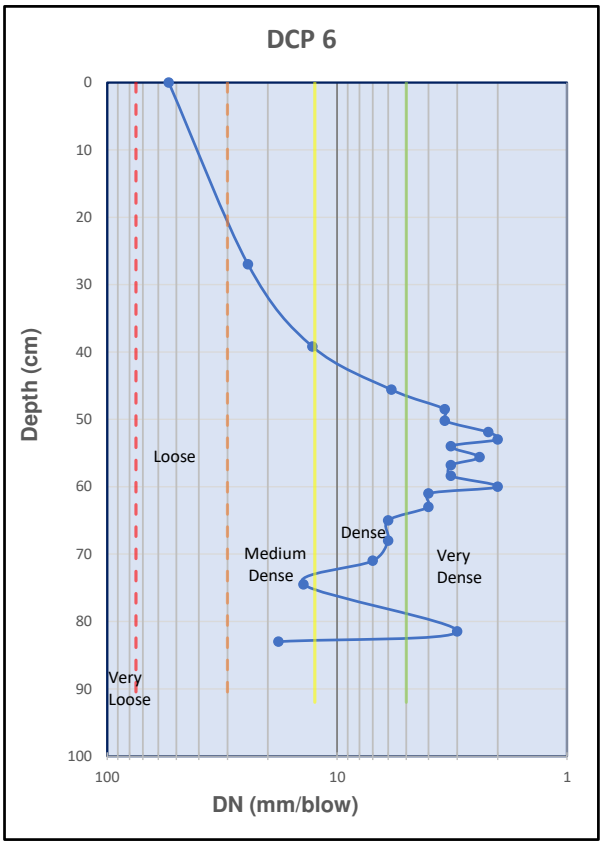

SOIL CONSISTENCIES: SPT N- Value vs DCP

CONSISTENCY	SPT (blows /300mm)	DCP (mm/blow)
Very loose	<4	>75
Loose	4- 10	30 – 75
Medium dense	10 – 30	12.5 – 30
Dense	30 - 50	5 – 12.5
Very dense	>50	2 - 5

0.27
0.39
0.46
0.49
0.50
0.52
0.53
0.54
0.56
0.57
0.58
0.60
0.61
0.63
0.65
0.68
0.71
0.75
0.82
0.83
0.92

DCP 8

Number of Blows	Penetration per Blow (mm/blow)	Corrected Depth (cm)	Classification
0			
5	22	10.9	Medium Dense
10	14	18.0	Medium Dense
15	11	23.5	Dense
20	12	29.6	Dense
25	10	34.5	Dense
30	13	40.8	Medium Dense
35	10	46.0	Dense
40	16	54.2	Medium Dense
45	12	60.0	Dense
50	12	66.0	Dense
55	11	71.5	Dense
60	8	75.5	Dense
65	7	79.0	Dense
70	5	81.6	Dense
75	6	84.5	Dense
80	5	87.0	Dense
85	6	90.0	Dense
90	6	93.0	Dense
95	7	96.3	Dense
100	5	99.0	Dense
105	5	101.5	Dense
110	5	104.0	Dense
115	14	111.1	Medium Dense
120	16	119.2	Medium Dense
125	19	128.7	Medium Dense
130	8	132.5	Dense
135	1	133.0	V. Dense
140			
145			

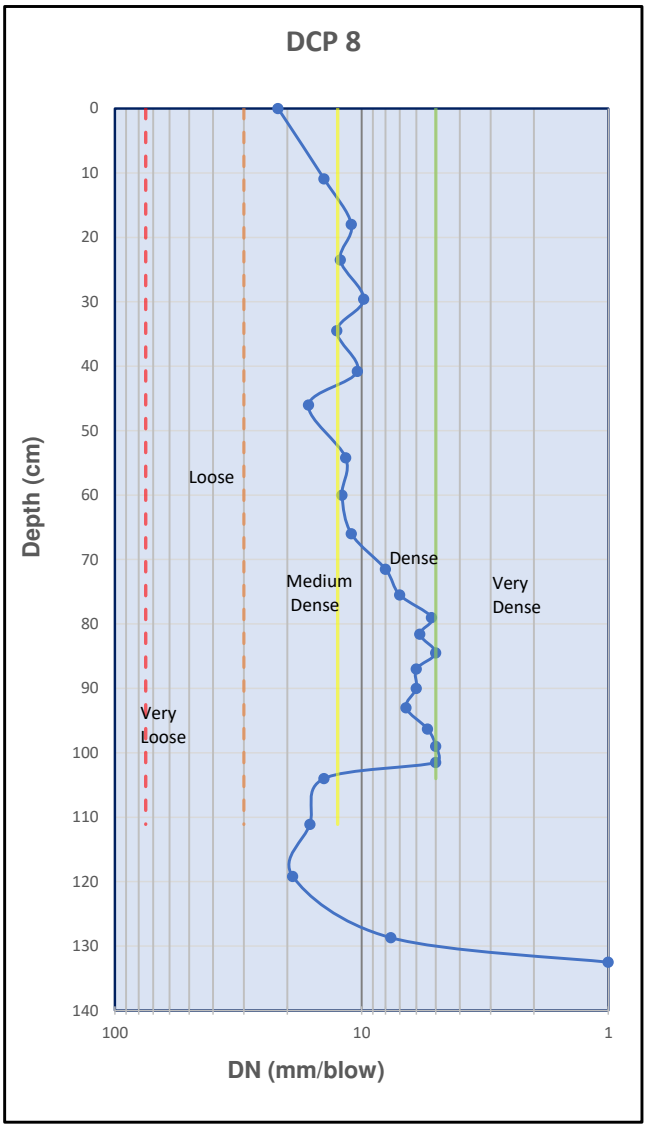

SOIL CONSISTENCIES: SPT N- Value vs DCP

CONSISTENCY	SPT (blows /300mm)	DCP (mm/blow)
Very loose	<4	>75
Loose	4- 10	30 – 75
Medium dense	10 – 30	12.5 – 30
Dense	30 - 50	5 – 12.5
Very dense	>50	2 - 5

DCP 9

Number of Blows	Penetration per Blow (mm/blow)	Corrected Depth (cm)	Classification
0			
5	33	16.5	Loose
10	41	37.0	Loose
15	32	53.0	Loose
20	6	56.0	Dense
25	4	58.2	V. Dense
30	5	60.9	Dense
35	7	64.5	Dense
40	11	70.2	Dense
45	20	80.0	Medium Dense
50	5	82.6	Dense
55	3	84.0	V. Dense
60	1	84.6	V. Dense
65	3	86.0	V. Dense
70			
75			
80			
85			
90			
95			
100			
105			
110			
115			

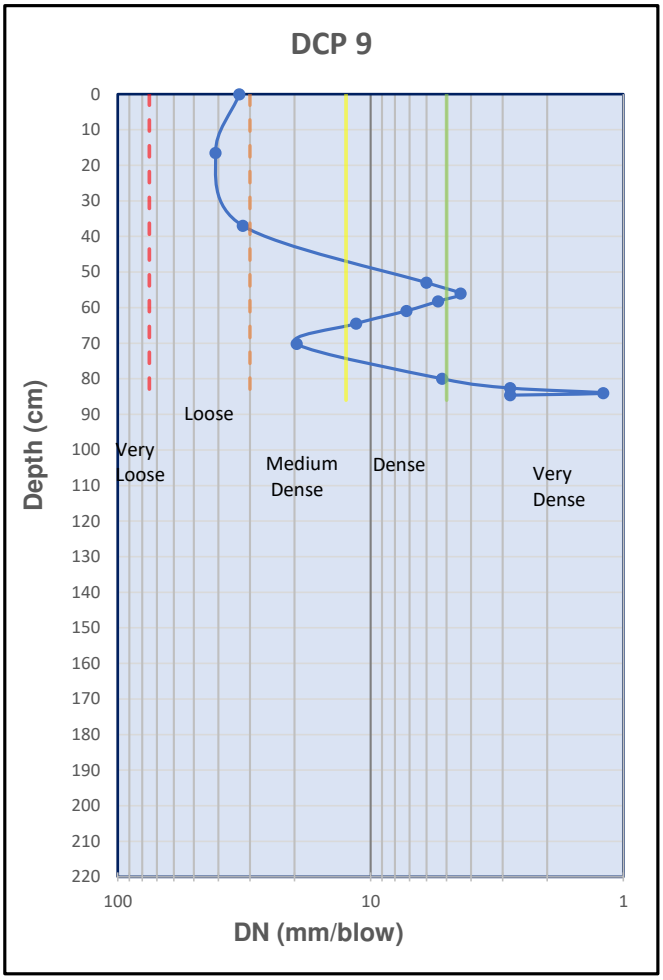

SOIL CONSISTENCIES: SPT N- Value vs DCP

CONSISTENCY	SPT (blows /300mm)	DCP (mm/blow)
Very loose	<4	>75
Loose	4- 10	30 – 75
Medium dense	10 – 30	12.5 – 30
Dense	30 - 50	5 – 12.5
Very dense	>50	2 - 5

DCP 10

Number of Blows	Penetration per Blow (mm/blow)	Corrected Depth (cm)	Classification
0			
5	23	11.7	Medium Dense
10	32	27.5	Loose
15	18	36.5	Medium Dense
20	9	40.9	Dense
25	8	44.7	Dense
30	9	49.0	Dense
35	9	53.5	Dense
40	13	60.0	Medium Dense
45	13	66.6	Medium Dense
50	17	74.9	Medium Dense
55	11	80.2	Dense
60	17	88.5	Medium Dense
65	15	96.0	Medium Dense
70	6	99.0	Dense
75	0	99.2	V. Dense
80	2	100.2	V. Dense
85	1	100.7	V. Dense
90	6	103.6	Dense
95	9	108.1	Dense
100	5	110.6	Dense
105	4	112.7	V. Dense
110	2	113.6	V. Dense
115			
120			
125			
130			
135			
140			
145			

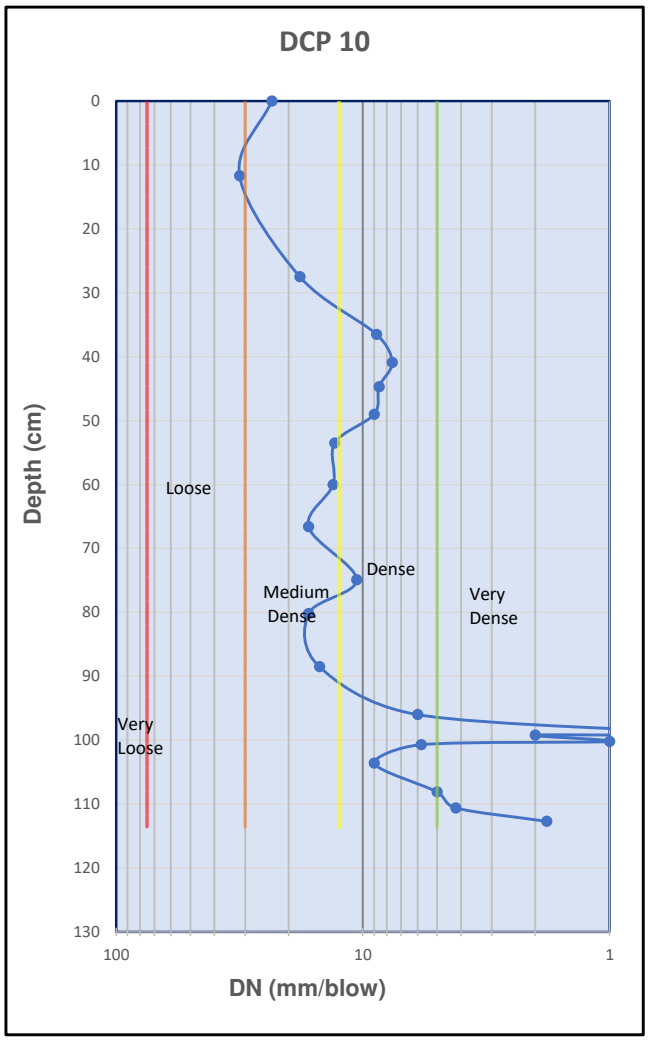

SOIL CONSISTENCIES: SPT N- Value vs DCP

CONSISTENCY	SPT (blows /300mm)	DCP (mm/blow)
Very loose	<4	>75
Loose	4- 10	30 – 75
Medium dense	10 – 30	12.5 – 30
Dense	30 - 50	5 – 12.5
Very dense	>50	2 - 5

APPENDIX C: LABORATORY TEST RESULTS

TYPICAL SOIL STRENGTH CHARACTERISICS

COHESIONLESS SOILS

Description	Dry Density (kg/m^3)		N - Value		Relative Density	Soil Modulus E (MPa) Sand Gravel	Sand	Sandy Silt
Very Loose	0	1,450	0	5	<0.2	25	12	6
Loose	1,450	1,600	5	10	0.2 - 0.4	50	25	12
Medium Dense	1,600	1,750	10	30	0.4 - 0.6	100	50	25
Dense	1,750	1,900	30	50	0.6 - 0.8	200	100	50
Very Dense	1,900	2,400	50	100	>0.8	400	200	100

COHESIVE SOILS

Description	Undrained Shear Strength (kN/m^3)		N - Value		Soil Modulus E (MPa) Sandy Silt	Silt	Silty Clay
Very Soft	0	20	0	2	6	3	2
Soft	20	40	2	4	12	6	3
Firm	40	80	4	8	25	12	6
Stiff	80	150	8	15	50	25	12
Very Stiff	150	350	15	30	100	50	25
	UCS = 2 C_u		C_u = Undrained shear strength				

COMPRESSIBILITY & COLLAPSE

Carter, M and Bentley, S. P., Correlations of Soil Properties, 1991.

	Coeff vol. Compr. m_v (m^2/kN)		Trouble Index	Collapse Potential		
V.High Compressibility		1.50E-03	Very Severe	> 20.1%		V.Highly Collapsible
High Compressibility	1.50E-03	3.00E-04	Severe	10.1%	20.0%	Highly Collapsible
Mod. Compressibility	3.00E-04	1.00E-04	Trouble	5.1%	10.0%	Mod. Collapsible
Low Compressibility	1.00E-04	3.00E-05	Mod. Trouble	1.1%	5.0%	Slightly Collapsible
V.Low Compressibilty	3.00E-05	1.00E-05	No problem	< 1%		V.Slightly Collapsible

TYPICAL ROCK/SOIL PROPERTIES & ESTIMATED BEARING CAPACITES

Rock / Soil Density Description	UCS (MPa)	Bearing Capacity	Mod. Ratio	E_d (MPa)	Friction Angle ϕ'	Cohesion Cu / C'	N-Value	Dry Unit Wt kg/m^3
Extremely hard rock	200	Function of UCS & jointing intensity (j)	600	120,000	Rock joint / structure friction	Rock joint / structure cohesion	Refer to Schmidt hardness or point load index	> 40
Very hard rock	150		450	67,500				35 - 40
Hard rock	100		375	37,500				30 - 35
Medium hard rock	50		325	16,250				27 - 30
Soft rock	10		300	3,000	Rock mass friction	Rock mass cohesion		25 - 27
Very soft rock	1		275	275				23 - 25
Very hard soil/decomp.	0.5		250	125			> 80	21.5 - 23
Very dense sand/gravel		400	250	100	44	-	50 - 80	19.5-21.5
Very dense silt/sand		300	225	68	40	-		
Very stiff clay/silt		200	200	40	22	80 / 15	15-30	17.5
Dense sand/gravel		300	225	68	40	-	30-50	17.5-19.5
Dense silt/sand		200	200	40	36	-		
Stiff clay/silt		150	175	26	20	40 / 10	8 - 15	15.5-17.5
Medium dense sand/gravel		200	200	40	36	-	10 - 30	15.5-17.5
Medium dense silt/sand		150	175	26	32	-		
Firm clay/silt		75	150	11	18	20 / 5	4 - 8	14.0-15.5
Loose sand/gravel		150	175	26	32	-	5 - 10	14.0-15.5
Loose silt/sand		75	150	11	28	-		
Soft clay/silt		35	125	4	17	10 / 2	2 - 4	12.5-14.0
Very loose sand/gravel		75	150	11	28	-	<5	<14.0
Very loose silt/sand		35	125	4	24	-		
Very soft clay/silt		20	100	2	16	<5 / 0	<2	<12.5

LABORATORY TEST RESULTS SUMMARY

CLIENT	BVI Consulting Engineers	**FILE No.**	
PROJECT	Stellenbosch Road Realignment	**TEST BY**	Control Geosciences
SITE	Cnr R44/R310/Alexander Rd	**DATE**	29/07/2020

TEST PIT	TP2	TP3	TP3	TP4	TP9			
SAMPLE #	32896	32897	32894A	32898	32895			
DEPTH (m)	0.35-0.80	0.1-0.4	0.4-0.9	0.1-0.5	0.8-1.5			
DESCRIPTION of MATERIAL	Silty clayey SAND	Silty clayey SAND	Silty gravelly SAND	Silty clayey SAND	Silty gravelly SAND			
Field Consistency	MD	MD	D-VD	MD	MD			
Field Moisture	SM-M	SM-M	D-SM	SM	SM			
Unified Soil Class	SM-SC	SM-SC	SM-SC	SM-SC	SM-SC			
TRH 4 Class			G6		G6			
AASHTO CLASS.	A-2-4	A-2-4	A-2-4	A-2-4	A-2-4			
SIEVE SIZE (mm)	**GRADING ANALYSIS (% PASSING)**							
53.000			100		100			
19.000			97		97			
13.200			96		96			
4.750	100	100	92	100	93			
2.000	99	98	89	99	87			
0.425	92	85	75	92	59			
0.300	84	74	68	80	52			
0.150	56	50	48	46	36			
0.075	34	35	30	26	21			
0.050	30	26	22	21	18			
0.002	10	10	7	6	5			
GRAVEL >2.000	1	2	11	1	13			
SAND >.06 < 2.000	68	69	64	76	68			
SILT > 0.002 < .06	21	19	18	17	14			
CLAY < 0.002	10	10	7	6	5			
GRADING MODULUS	2.25	2.18	1.94	2.17	1.67			
	LABORATORY DETERMINED SOIL CONSTANTS							
LIQUID LIMIT	0	15	16	10	15			
PLASTIC LIMIT	0	9	10	10	9			
PLASTICITY INDEX	0	6	6	0	6			
LIQUIDITY INDEX								
PI (whole sample)	0	4	4	0	3			
LINEAR SHRINKAGE	0.0	2.0	2.0	0.0	2.0			
EXPANSIVENESS	Non	Non	Non	Non	Non			
Savage's K-Value	Non	Non	Non	Non	Non			
Laboratory S.G.								
Actual m/c (%)								
Max Mod Aashto			2086		2134			
OMC (%)			8.0		7.6			
C.B.R. @ 90% MOD			12		13			
C.B.R. @ 95% MOD			29		30			
C.B.R. @ 100% MOD			70		80			
% Swell - 90% MOD			1.5		0.9			
% Swell - 95% MOD								
% Swell -100% MOD								

CHART 4c - PARTICLE SIZE DISTRIBUTION

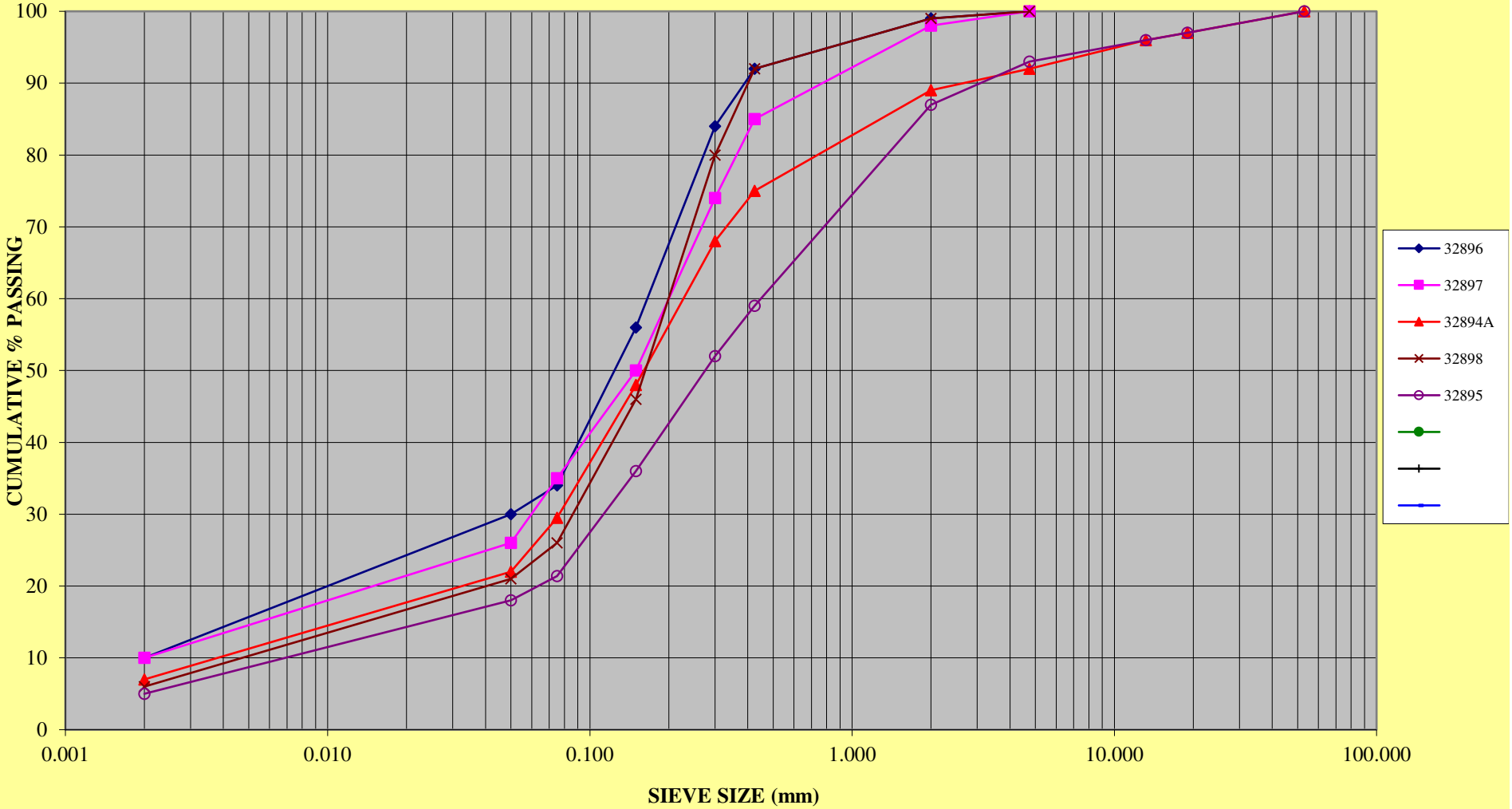

CONTROL GEOSCIENCES (PTY) LTD

CIVIL ENGINEERING MATERIAL AND GEOTECHNICAL LABORATORY,
GEOTECHNICAL AND ENVIRONMENTAL SERVICES

A division of ControLab South Africa (Pty) Ltd – Accreditation Number: T0308

1986/091003/07

LABORATORY: 7 Milan Street, Airport Industria, Cape Town, Tel: (021) 934 1114, email: geosci@mweb.co.za
CONTROLAB HEAD OFFICE: 1 Alfred Road, Vincent, East London, Tel: (043) 726 7859, Fax: (043) 726 7426, email: info@controlab.co.za
OTHER CONTROLAB BRANCH OFFICES: East London, Johannesburg, Mthatha, Kokstad, Queenstown, Lusaka - Zambia

CLIENT: MTS Biggs Farming t/a Geoservices

PROJECT: Stellenbosch Road Alignment

DATE: 29-07-2020

ATT: Tim Biggs

REF: L200736A

ROAD INDICATOR TEST SUMMARY

Client Ref. No.:		***Sample Number:***	32894A
Client Sample Ref.:		***Sample Position:***	TP 3
Client Sample Ref.:		***Depth:***	0.4-0.9m
Client Sample Ref.:		***Sample Description:***	yel br silt sand & cobbles

TMH 1 Method A1	
Sieve Analysis	
Sieve Size (mm)	**% Passing**
75	
63	100
53	99
37,5	98
26,5	97
19	97
13,2	96
4,75	92
2,00	89
0,425	75
0,075	29,5

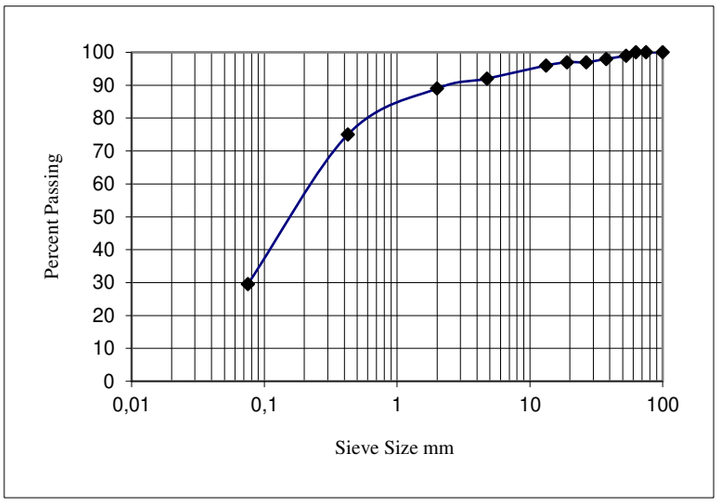

TMH 1 Methods A2, A3 & A4	
Atterberg limits	
Liquid Limit	16
Plastic Index	6
Linear Shrinkage	2,0

Grading Modulus (GM)	1,07
Oversized Index (Io)	
Shrinkage Product (Sp)	
Plastic Product (Pp)	
Grading Coefficient (Gc)	
Maximum size (mm)	

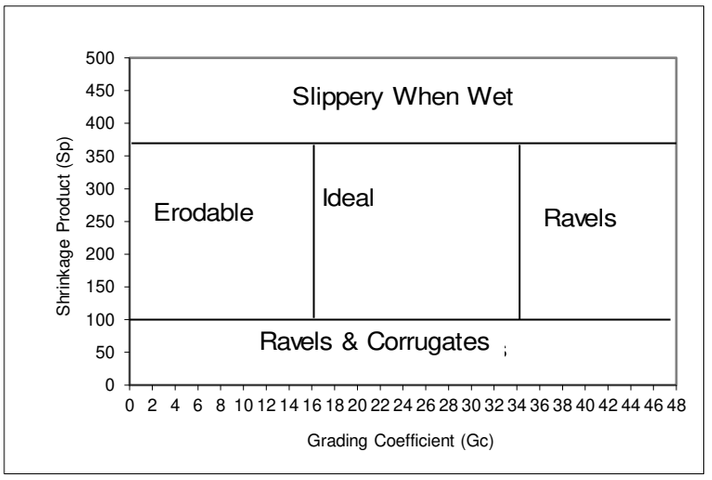

Maximum Dry Den.	OMC	Percentage Compaction.	100%	98%	95%	93%	90%
2086	8	**CBR Values**	70	50	29	20	12
						Max. %Swell	1,5

Technical Signatory: M Hofman

The above test results are pertinent to the samples received and tested only.
While the tests are carried out according to recognized standards Controll Geosciences shall not be liable for erroneous testing or reporting thereof. This report may not be reproduced except in full without prior consent of Control Geosciences.

CONTROL GEOSCIENCES (PTY) LTD

CIVIL ENGINEERING MATERIAL AND GEOTECHNICAL LABORATORY,
GEOTECHNICAL AND ENVIRONMENTAL SERVICES

A division of ControLab South Africa (Pty) Ltd – Accreditation Number: T0308

1986/091003/07

LABORATORY: 7 Milan Street, Airport Industria, Cape Town, Tel: (021) 934 1114, email: geosci@mweb.co.za
CONTROLAB HEAD OFFICE: 1 Alfred Road, Vincent, East London, Tel: (043) 726 7859, Fax: (043) 726 7426, email: info@controlab.co.za
OTHER CONTROLAB BRANCH OFFICES: East London, Johannesburg, Mthatha, Kokstad, Queenstown, Lusaka - Zambia

CLIENT: MTS Biggs
t/a Geoservices

PROJECT: Stellenbosch Road Alignment

DATE: 29-07-2020

ATT: Tim Biggs

REF: L200736A

ROAD INDICATOR TEST SUMMARY

Client Ref. No.:		***Sample Number:***	32895
Client Sample Ref.:		***Sample Position:***	TP 9
Client Sample Ref.:		***Depth:***	0.8-1.5m
Client Sample Ref.:		***Sample Description:***	yel br silty gvl sand

TMH 1 Method A1	
Sieve Analysis	
Sieve Size (mm)	**% Passing**
75	
63	
53	100
37,5	99
26,5	98
19	97
13,2	97
4,75	93
2,00	87
0,425	59
0,075	21,4

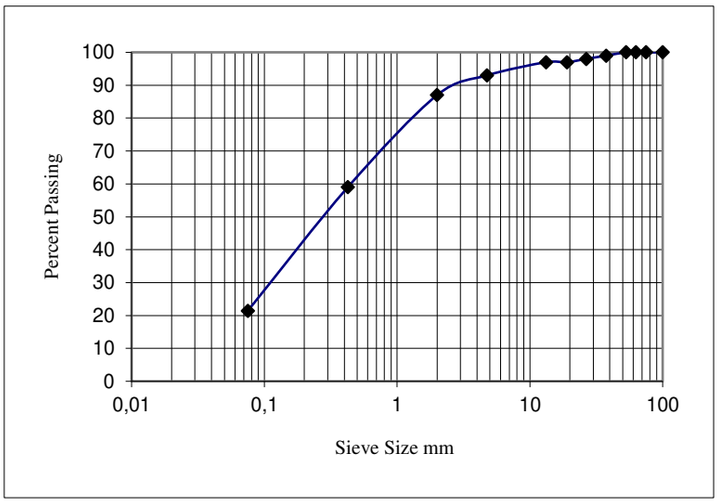

TMH 1 Methods A2, A3 & A4	
Atterberg limits	
Liquid Limit	15
Plastic Index	6
Linear Shrinkage	2,0

Grading Modulus (GM)	1,33
Oversized Index (Io)	
Shrinkage Product (Sp)	
Plastic Product (Pp)	
Grading Coefficient (Gc)	
Maximum size (mm)	

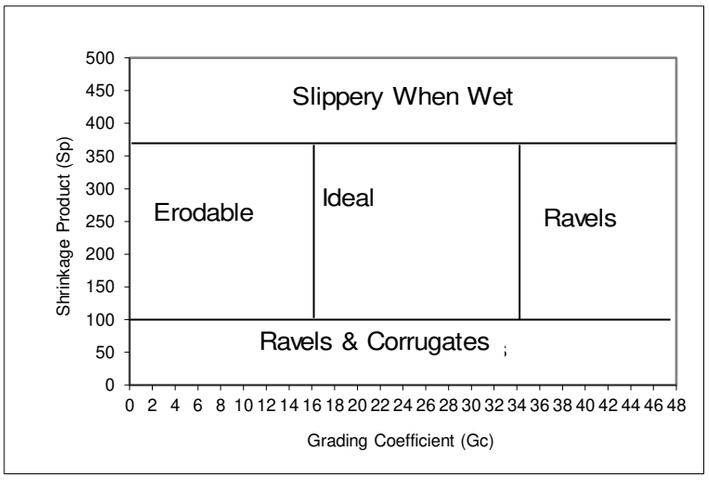

Maximum Dry Den.	OMC	Percentage Compaction.	100%	98%	95%	93%	90%
2134	7,6	**CBR Values**	80	54	30	20	13
						Max. %Swell	0,9

Technical Signatory: M Hofman

The above test results are pertinent to the samples received and tested only.
While the tests are carried out according to recognized standards Controll Geosciences shall not be liable for erroneous testing or reporting thereof. This report may not be reproduced except in full without prior consent of Control Geosciences.

CONTROL GEOSCIENCES (PTY) LTD

CIVIL ENGINEERING MATERIAL AND GEOTECHNICAL LABORATORY,
GEOTECHNICAL AND ENVIRONMENTAL SERVICES

A division of ControLab South Africa (Pty) Ltd – Accreditation Number: T0308

1986/091003/07

LABORATORY: 7 Milan Street, Airport Industria, Cape Town, Tel: (021) 934 1114, email: geosci@mweb.co.za
CONTROLAB HEAD OFFICE: 1 Alfred Road, Vincent, East London, Tel: (043) 726 7859, Fax: (043) 726 7426, email: info@controlab.co.za
OTHER CONTROLAB BRANCH OFFICES: East London, Johannesburg, Mthatha, Kokstad, Queenstown, Lusaka - Zambia

CLIENT: MTS Biggs Farming t/a Geoservices

PROJECT: Stellenbosch Road Alignment

DATE: 29-07-2020

ATT: Tim Biggs

REF: L200736A

ASTM D422 SIEVE ANALYSIS

DESCRIPTION : dark brown clayey sand

POSITION : TP 2 @ 0.35-0.8m

SAMPLE NO. : 32896

CLIENT SAMPLE NO. :

Sieve Analysis		Percent Passing
SIEVE SIZE (mm)	75,00	
	63,00	
	53,00	
	37,50	
	26,50	
	19,00	
	13,20	
	9,50	
	6,70	
	4,75	100
	2,36	99
	2,00	99
	1,18	98
	0,600	96
	0,425	92
	0,300	84
	0,150	56
	0,0750	34

Hydrometer Analysis	
Diameter of particle (mm)	Percentage of soil suspension (%)
0,0723	34
0,0368	26
0,0187	19
0,0098	13
0,0034	10
0,0025	10
0,0015	10

SCS Dispersion Test	
Diameter of particle (mm)	Percentage of soil suspension (%)

% SCS Dispersion:	
Initial Moisture Content (%) :	
pH:	
Conductivity mS/m:	

Atterberg Limits :	
Liquid Limit	
Plastic Index	S-P
Linear Shrinkage	

MOD AASHTO ; C.B.R. :	
MOD AASHTO (Kg/m³)	
O.M.C. (%)	
C.B.R. @ 100% Comp.	
C.B.R. @ 98 % Comp.	
C.B.R. @ 95 % Comp.	
C.B.R. @ 93 % Comp.	
C.B.R. @ 90 % Comp.	
Swell (max) %	

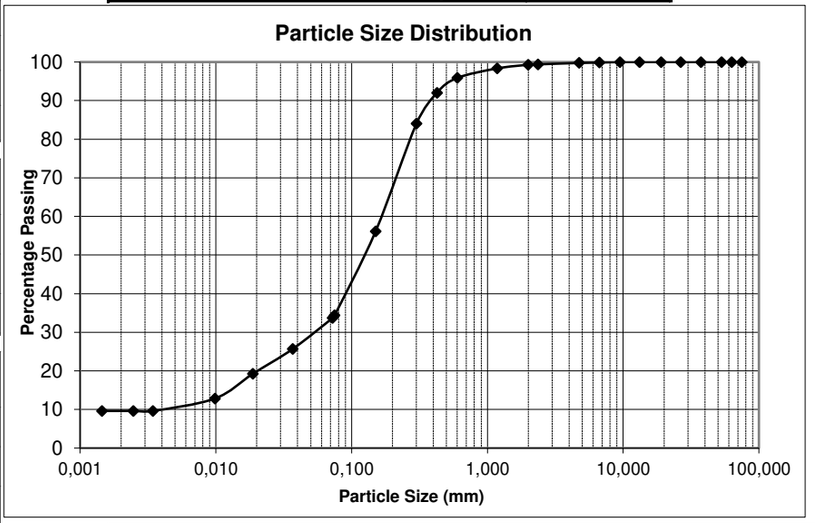

Tabulated Summary	Percentage
Gravel : Percentage - 4.75 mm	0
Sand : Percentage - 4.75mm and + 0.075mm	66
Silt : Percentage - 0.075mm and + 0.002mm	24
Clay : Percentage - 0.002mm	10

The above test results are pertinent to the samples received and tested only. Technical Signatory: M Hofman

While the tests are carried out according to recognized standards Control Geosciences shall not be liable for erronous testing or reporting thereof.

This report may not be reproduced except in full without prior consent of Control Geosciences.

Remarks:

CONTROL GEOSCIENCES (PTY) LTD

CIVIL ENGINEERING MATERIAL AND GEOTECHNICAL LABORATORY,
GEOTECHNICAL AND ENVIRONMENTAL SERVICES

A division of ControLab South Africa (Pty) Ltd – Accreditation Number: T0308

1986/091003/07

LABORATORY: 7 Milan Street, Airport Industria, Cape Town, Tel: (021) 934 1114, email: geosci@mweb.co.za
CONTROLAB HEAD OFFICE: 1 Alfred Road, Vincent, East London, Tel: (043) 726 7859, Fax: (043) 726 7426, email: info@controlab.co.za
OTHER CONTROLAB BRANCH OFFICES: East London, Johannesburg, Mthatha, Kokstad, Queenstown, Lusaka - Zambia

CLIENT: MTS Biggs Farming t/a Geoservices

PROJECT: Stellenbosch Road Alignment

DATE: 29-07-2020

ATT: Tim Biggs

REF: L200736A

ASTM D422 SIEVE ANALYSIS

DESCRIPTION : dark brown clayey sand
POSITION : TP 3 @ 0.1-0.4m

SAMPLE NO. : 32897
CLIENT SAMPLE NO. :

Sieve Analysis		Percent Passing
SIEVE SIZE (mm)	75,00	
	63,00	
	53,00	
	37,50	
	26,50	
	19,00	
	13,20	
	9,50	
	6,70	
	4,75	100
	2,36	99
	2,00	98
	1,18	97
	0,600	92
	0,425	85
	0,300	74
	0,150	50
	0,0750	35

Hydrometer Analysis	
Diameter of particle (mm)	Percentage of soil suspension (%)
0,0715	35
0,0368	25
0,0185	22
0,0097	19
0,0034	13
0,0025	10
0,0015	10

SCS Dispersion Test	
Diameter of particle (mm)	Percentage of soil suspension (%)

% SCS Dispersion:	
Initial Moisture Content (%) :	
pH:	
Conductivity mS/m:	

Atterberg Limits :	
Liquid Limit	15
Plastic Index	6
Linear Shrinkage	2,0

MOD AASHTO ; C.B.R. :	
MOD AASHTO (Kg/m³)	
O.M.C. (%)	
C.B.R. @ 100% Comp.	
C.B.R. @ 98 % Comp.	
C.B.R. @ 95 % Comp.	
C.B.R. @ 93 % Comp.	
C.B.R. @ 90 % Comp.	
Swell (max) %	

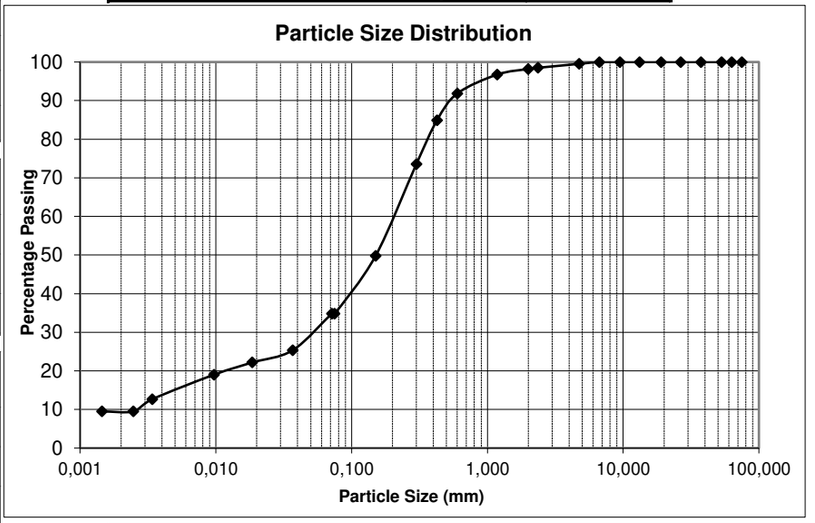

Tabulated Summary	Percentage
Gravel : Percentage - 4.75 mm	0
Sand : Percentage - 4.75mm and + 0.075mm	65
Silt : Percentage - 0.075mm and + 0.002mm	23
Clay : Percentage - 0.002mm	12

The above test results are pertinent to the samples received and tested only.
While the tests are carried out according to recognized standards Control Geosciences shall not be liable for erronous testing or reporting thereof.
This report may not be reproduced except in full without prior consent of Control Geosciences.

Technical Signatory: M Hofman

Remarks:

CONTROL GEOSCIENCES (PTY) LTD

CIVIL ENGINEERING MATERIAL AND GEOTECHNICAL LABORATORY,
GEOTECHNICAL AND ENVIRONMENTAL SERVICES

A division of ControLab South Africa (Pty) Ltd – Accreditation Number: T0308

1986/091003/07

LABORATORY: 7 Milan Street, Airport Industria, Cape Town, Tel: (021) 934 1114, email: geosci@mweb.co.za
CONTROLAB HEAD OFFICE: 1 Alfred Road, Vincent, East London, Tel: (043) 726 7859, Fax: (043) 726 7426, email: info@controlab.co.za
OTHER CONTROLAB BRANCH OFFICES: East London, Johannesburg, Mthatha, Kokstad, Queenstown, Lusaka - Zambia

CLIENT: MTS Biggs Farming t/a Geoservices

PROJECT: Stellenbosch Road Alignment

DATE: 29-07-2020

ATT: Tim Biggs

REF: L200736A

ASTM D422 SIEVE ANALYSIS

DESCRIPTION : dark brown silty sand
POSITION : TP 4 @ 0.1-0.5m

SAMPLE NO. : 32898
CLIENT SAMPLE NO. :

Sieve Analysis		Percent Passing
SIEVE SIZE (mm)	75,00	
	63,00	
	53,00	
	37,50	
	26,50	
	19,00	
	13,20	
	9,50	
	6,70	
	4,75	
	2,36	100
	2,00	99
	1,18	98
	0,600	96
	0,425	92
	0,300	80
	0,150	46
	0,0750	26

Hydrometer Analysis	
Diameter of particle (mm)	Percentage of soil suspension (%)
0,0736	26
0,0375	19
0,0190	13
0,0099	10
0,0035	6
0,0025	6
0,0015	6

SCS Dispersion Test	
Diameter of particle (mm)	Percentage of soil suspension (%)

% SCS Dispersion:	
Initial Moisture Content (%) :	
pH:	
Conductivity mS/m:	

Atterberg Limits :	
Liquid Limit	
Plastic Index	S-P
Linear Shrinkage	

MOD AASHTO ; C.B.R. :	
MOD AASHTO (Kg/m³)	
O.M.C. (%)	
C.B.R. @ 100% Comp.	
C.B.R. @ 98 % Comp.	
C.B.R. @ 95 % Comp.	
C.B.R. @ 93 % Comp.	
C.B.R. @ 90 % Comp.	
Swell (max) %	

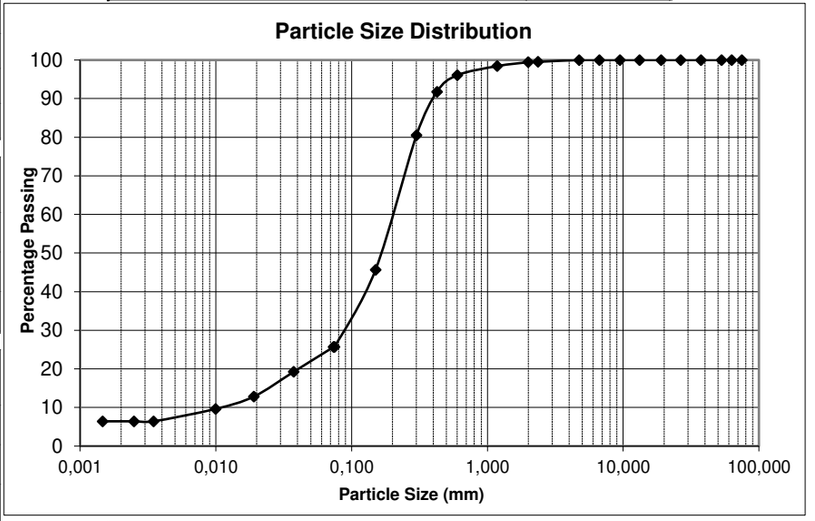

Tabulated Summary	Percentage
Gravel : Percentage - 4.75 mm	0
Sand : Percentage - 4.75mm and + 0.075mm	74
Silt : Percentage - 0.075mm and + 0.002mm	20
Clay : Percentage - 0.002mm	6

The above test results are pertinent to the samples received and tested only. Technical Signatory: M Hofman
While the tests are carried out according to recognized standards Control Geosciences shall not be liable for erronous testing or reporting thereof.
This report may not be reproduced except in full without prior consent of Control Geosciences.

Remarks:

PART B

BOOK OF DRAWINGS

List of Detail Drawings

Number	Description	Rev
	Roads	
RD1.1	Barriers Kerbs & Channels	C
RD1.2	Mountable Kerbs & Channels	C
RD1.3	Edgings	C
RD1.4	Flat Channels	C
RD1.5	Kassel Kerb	A
RD1.6A	Delineator Kerb: DK2	A
RD1.6B	Delineator Kerb: DK3	A
RD1.7	Water Channels	B
RD1.8	Transition Kerb	A
RD1.9	Kerb Rounding and Bullnose	A
RD1.10	Removable Barrier Kerbs	A
RD1.11A	Removable Delineator Kerb (DK2)	A
RD1.11B	Removable Delineator Kerb (DK3)	A
RD2.1	Dropped Kerbs: Sheet 1 – Vehicular Traversal	B
RD2.2	Dropped Kerbs: Sheet 2 – Pedestrian, Wheelchair, Loading and Bicycle Ramps	D
RD3.1A	Miscellaneous Ramps: Type A – Wheelchair Ramp with Landing (Preferred)	A
RD3.1B	Miscellaneous Ramps: Type B – Wheelchair Ramp for Narrow Footways/Verges (Not Preferred) and 5.6	A
RD3.2A	Miscellaneous Ramps: Type A – Bicycle Ramp	A
RD3.2B	Miscellaneous Ramps: Type B – Bicycle Ramp	A
RD3.2C	Miscellaneous Ramps: Type C – Bicycle Ramp	A
RD4.1	Pedestrian Ramps: Uncontrolled Pedestrian Crossings, Wide Verge - Sidewalk with Unmade Verge (Preferred)	C
RD4.2	Pedestrian Ramps: Uncontrolled Pedestrian Crossings, Wide Verge – Full Verge Surfaced (Preferred)	C
RD4.3	Pedestrian Ramps: Uncontrolled Pedestrian Crossings, Narrow Verge (Space Constraint), Combination Drop (Partial Drop) (Not Ideal, but Acceptable)	C
RD4.4	Pedestrian Ramps: Uncontrolled Pedestrian Crossings, Narrow Verge (Space Constraint), Full Drop (Acceptable, but Not Preferred)	C
RD4.5	Pedestrian Ramps: Uncontrolled Pedestrian Crossings, On Straight Edge at Intersection (Preferred)	C
RD4.6	Pedestrian Ramps: Uncontrolled Pedestrian Crossings, Oblique Ramp (Single Direction) (Not Preferred)	C
RD4.7	Pedestrian Ramps: Controlled Pedestrian Crossings, Signalised Crossing, Wide Verge - Sidewalk with Unmade Verge (Preferred)	D
RD4.8	Pedestrian Ramps: Controlled Pedestrian Crossings, Signalised Crossing, Full Verge Surfaced (Preferred)	C
RD4.9	Pedestrian Ramps: Signal Controlled Pedestrian Crossings, Narrow Verge (Space Constraint), Combination Drop (Partial Drop) (Not Ideal, but Acceptable)	D
RD4.10	Pedestrian Ramps: Signal Controlled Pedestrian Crossings, Narrow Verge (Space Constraint), Full Drop (Acceptable, but Not Preferred)	B
RD4.11	Pedestrian Ramps: Controlled Pedestrian Crossings, Signalised Intersection, Pedestrian Crossings On Straight Edges (Preferred)	C
RD4.12	Pedestrian Ramps: Controlled Pedestrian Crossings, Signalised Intersection, Oblique Ramp (Acceptable, but Not Preferred)	C
RD4.13	Pedestrian Ramps: Controlled Pedestrian Crossings, Signalised Intersection, Oblique Ramp in Close Proximity (Not Preferred)	C
RD5.1	Typical Carriageway Crossing Details (Vehicular Access)	B
RD5.2	Various Carriageway Crossing Types	B

RD6.1A	Typical Road Cross Section: Class 2 Major Arterial Road (40m Road Reserve) Sheet 1: Shoulder and Shared NMT	A
RD6.1B	Typical Road Cross Section: Class 2 Major Arterial Road (40m Road Reserve) Sheet 2: Class 2 Cycle Lane (No Shoulder)	A
RD6.2A	Typical Road Cross Section: Class 3 Minor Arterial Road (40m Road Reserve) Sheet 1: Only Shoulder (No On-street Parking)	D
RD6.2B	Typical Road Cross Section: Class 3 Minor Arterial Road (40m Road Reserve) Sheet 2: On-Street Parking with Class 3 Cycle Facility	D
RD6.2C	Typical Road Cross Section: Class 3 Minor Arterial Road (40m Road Reserve) Sheet 3: Class 2/3 Cycle Facility (No Shoulder or On-street Parking)	A
RD6.3A	Typical Road Cross Section: Class 4 Collector Road (20/18m Road Reserve) Sheet 1: Class 3 Cycle Facility with On-Street Parking	D
RD6.3B	Typical Road Cross Section: Class 4 Collector Road (20/18m Road Reserve) Sheet 2: Class 3 Cycle Facility with On-Street Parking	D
RD6.3C	Typical Road Cross Section: Class 4 Collector Road (20/18m Road Reserve) Sheet 3: Class 3 Cycle Facility without On-Street Parking	D
RD6.3D	Typical Road Cross Section: Class 4 Collector Road (20/18m Road Reserve) Sheet 4: No Cycle Facility or On-Street Parking	D
RD6.3E	Typical Road Cross Section: Class 4 Collector Road (20/18m Road Reserve) Sheet 4: Class 2 Cycle Facility with On-Street Parking	A
RD6.4A	Typical Road Cross Section: Class 5A Commercial & Industrial Road: One-lane Single Carriageway (16-20m Road Reserve)	D
RD6.4B	Typical Road Cross Section: Class 5A Commercial & Industrial Road: Two-lane Single Carriageway (24-30m Road Reserve)	D
RD6.4C	Typical Road Cross Section: Class 5A Commercial & Industrial Road: Two-lane Dual Carriageway (24-30m Road Reserve)	D
RD6.4D	Typical Road Cross Section: Class 5B Local Residential Street: 12m Road Reserve, Cambered (Preferred)	D
RD6.4E	Typical Road Cross Section: Class 5B Local Residential Street: 12m Road Reserve, Cross-Fall (Not Preferred)	B
RD6.4F	Typical Road Cross Section: Class 5C Local Residential Street: 10m Road Reserve	B
RD6.4G	Typical Road Cross Section: Class 5D Local Residential Street: 8m Road Reserve	B
RD6.5	Typical Road Cross Section: Class 6 Road (Pedestrian Link) [6m Road Reserve]	D
RD7	Horizontal Curve Road Widening on Class 5 Road Reserves	A
RD8.1	Embayments: Parallel Parking Embayment	A
RD8.2	Embayments: Taxi Embayment	A
RD8.3	Embayments: Bus Embayment	A
RD8.4	Embayments: Refuse Embayment	C
RD9.1	Parking Layout: Sheet 1 – 90°, Parallel & Kerb-Side Embayment Parking	B
RD9.2	Parking Layout: Sheet 2 – 45° & 60° Parking (Non-Interlocking)	A
RD9.3	Parking Layout: Sheet 3 – 45° & 60° Parking (Interlocking)	A
RD10	Speed Hump	D
RD11A	Raised Pedestrian Crossing (Sheet 1)	B
RD11B	Raised Pedestrian Crossing (Sheet 2)	B
RD12.1A	Raised Intersection: Asphalt Table (for existing roads)	B
RD12.1B	Raised Intersection: Asphalt Table (for new roads)	B
RD12.2	Raised Intersection: Segmented Block Paving Table	B

RD13.1	Guardrails: Sheet 1	A
RD13.2	Guardrails: Sheet 2	B
RD13.3	Guardrails: Sheet 3	B
RD14	Mole Barrier	B
RD15.1	Street Name Plate	B
RD15.2	Road Name Kerb	B
RD16.1	Reinstatement of Shallow Trenches in Road Reserves: Sheet 1 – Trenches in Roadways	D
RD16.2	Reinstatement of Shallow Trenches in Road Reserves: Sheet 2 – Trenches in Pedestrian Footways & Verges	D
RD17	Typical Protection Detail of Road Edge and Back of Footway	B
RD18.1	Non-Motorised Transport Facilities: Widths and Clearances	A
RD18.2	Non-Motorised Transport Facilities: Miscellaneous Application Details 1	A
RD19	Bicycle Stand	A
Road Marking & Road Signs		
RM1.1	Accommodation of Cyclists: Provision of Green Cycle Strips at Intersections	B
RM1.2	Accommodation of Cyclists: Provision of Green Cycle Strips Through Roundabouts	B
RM2A	Typical Road Markings for Public Transport Stops and Embayments: Sheet 1 – Normal Stops and Embayments	B
RM2B	Typical Road Markings for Public Transport Stops and Embayments: Sheet 2 – Hybrid Stops and Embayments	B
RM3	Lateral and Vertical Clearance Requirements for Small Single Support Sign	C
RM4.1	Road Sign Support - Standard Type	A
RM4.2A	Cantilever Road Sign Support: Square Type, Short Arm - Single Sign	A
RM4.2B	Cantilever Road Sign Support: Square Type, Short Arm - Multiple Signs	A
RM4.3A	Cantilever Road Sign Support: Square Type, Long Arm - Single Sign	A
RM4.3B	Cantilever Road Sign Support: Square Type, Long Arm - Multiple Signs	A
RM4.4A	Cantilever Road Sign Support: Curve Type - Single Sign	A
RM4.4B	Cantilever Road Sign Support: Curve Type - Multiple Signs	A
RM5	Advance Warning for Obstructions in Shared NMT Facilities (For Cyclists)	A
RM6	Roundabout "Fish Hook" Approach Arrows	A
RM7	Construction Sign Board	A
Stormwater		
SW1.1	Sub-surface Drain: Main Line	C
SW1.2	Sub-surface Drain: Rodding Eye & Junction	B
SW1.3	Provision of Sub-Surface Drains	A
SW2.1	Manhole for Subsurface Drain	C
SW2.2A	Manhole for Stormwater Pipe without Access Shaft (Shallow Type) - Sheet 1: Plan View	C
SW2.2B	Manhole for Stormwater Pipe without Access Shaft (Shallow Type) - Sheet 2: Sections	D
SW2.3A	Manhole for Stormwater Pipe with Access Shaft (Deep Type) - Sheet 1: Plan View	C
SW2.3B	Manhole for Stormwater Pipe with Access Shaft (Deep Type) - Sheet 2: Sections	D
SW2.3C	Manhole for Stormwater Pipe with Access Shaft (Deep Type) - Sheet 3: Sections	D
SW2.4	Ductile Iron Manhole Cover and Frame, with Concrete Infill	A

SW3.1	Stormwater Catchpit – Type A: Double Kerb & Grid Inlet Combination	D
SW3.2A	Stormwater Catchpit – Type B: Double Kerb Inlet (2 x 1m inlet kerb type) - Catchpit Details	A
SW3.2B	Stormwater Catchpit – Type B: Double Kerb Inlet (2 x 1m inlet kerb type) - Reinforcement Details	A
SW3.3A	Stormwater Catchpit – Type C: Double Kerb Inlet (Extended Inlet type kerb), Sheet 1: Catchpit Details	D
SW3.3B	Stormwater Catchpit – Type C: Double Kerb Inlet (Extended Inlet type kerb), Sheet 2: Reinforcement Details	C
SW3.4	Stormwater Catchpit – Type D1: Grid Inlet only (with Kerb & Channel)	C
SW3.5	Stormwater Catchpit – Type D2: Grid Inlet only (with Double Flat Channel)	C
SW3.6	Stormwater Catchpit for Steep Slopes	B
SW3.7A	Stormwater Catchpit – Type F: Cover-Inlet Combination Slab - Catchpit Details	A
SW3.7B	Stormwater Catchpit – Type F: Cover-Inlet Combination Slab - Reinforcement Details	A
SW3.8	Stormwater Catchpit – Shallow Flow Chamber	A
SW4	Standard Precast Inlet Kerb (1m Type)	B
SW5.1	Typical Inlet Structure for Existing Ponds	C
SW5.2	Typical Outlet Structure for Existing Ponds	C
SW5.3	Normal Inlet/Outlet Structure	C
SW5.4	Example of a Pond Inlet Structure with Sediment Trap	B
SW6	Anchor Blocks for Stormwater Pipes on Steep Slopes	B
SW7	Light Duty Stormwater Non-Return Flap	A
SW8	Oil-Petrol Separator System	A
SW9	Crimp & Bruges: Limiting Grades (for Stormwater and Sewer Pipes)	A
SW10	Litter Trap (for Stormwater Kerb Inlet Catchpits)	B
SW11	Bedding Detail for Rigid Stormwater Pipes (Class B)	B
SW12	Silt Trap for Stormwater Manholes	A
SW13	Lined Open Channels	A
General		
GE1.1	Bollard - Precast Concrete	A
GE1.2	Bolalrd - Flexible	A
GE2A	Steel Handrail: Stanchion In Concrete Sheet 1	B
GE2B	Steel Handrail: Stanchion In Concrete Sheet 2	A
GE2C	Steel Handrail: Stanchion In Concrete Sheet 3	A
GE2D	Steel Handrail: Stanchion In Concrete Sheet 4	A
GE2E	Steel Handrail: Stanchion In Concrete Sheet 5	A
GE2F	Steel Handrail: Stanchion In Concrete Sheet 6	A
GE3	Concrete Palisade Fencing	B
GE4	Cable Fence	B
GE5	Town Survey Marker	B

GE6.1	Specification for the Installation of Electrical Ducts: Sheet 1	B
GE6.2	Specification for the Installation of Electrical Ducts: Sheet 2	B
GE6.3	Specification for the Installation of Electrical Ducts: Sheet 3	B
GE6.4	Specification for the Installation of Electrical Ducts: Sheet 4	B
GE6.5	Specification for the Installation of Electrical Ducts: Sheet 5	B
GE6.6	Specification for the Installation of Electrical Ducts: Sheet 6	B
GE7	Protection of Services in Roadway	B
GE8	Swing Gate	B
GE9	Sight Triangles for Lower & Middle Order Roads	A
GE10.1	Timber Post and Rail (Ranch) Fencing: Single Rail	B
GE10.2	Timber Post and Rail (Ranch) Fencing: Double Rail	B
GE10.3	Timber Post and Rail (Ranch) Fencing: Double Rail with Mesh Protection	B
GE11	Pneumatic Horizontal Boring ("Moling")	A
GE12	Cable Inspection Manhole	C
GE13.1	Single Segmental Block Retaining Wall along NMT Facilities & General	A
GE13.2	Single Segmental Block Retaining Wall along Roadways	A

To: *Document Structure*

Detail Drawings

ROADS

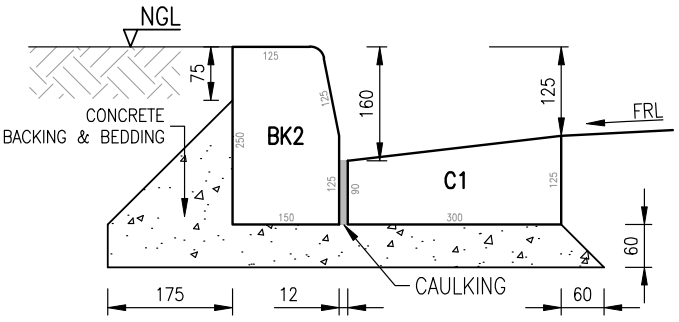

BK2 BARRIER KERB & C1 CHANNEL

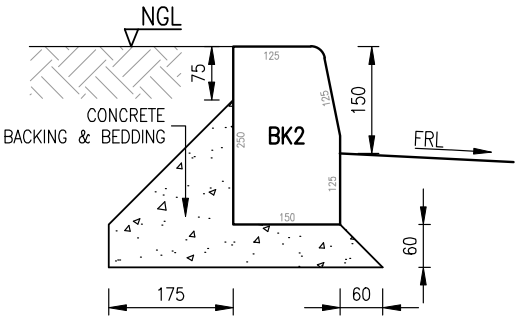

BK2 BARRIER KERB ONLY

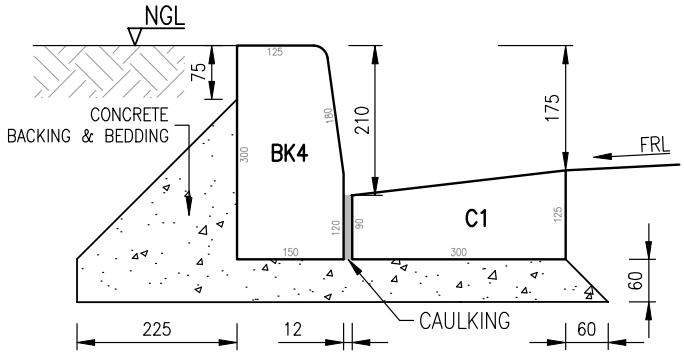

BK4 BARRIER KERB & C1 CHANNEL

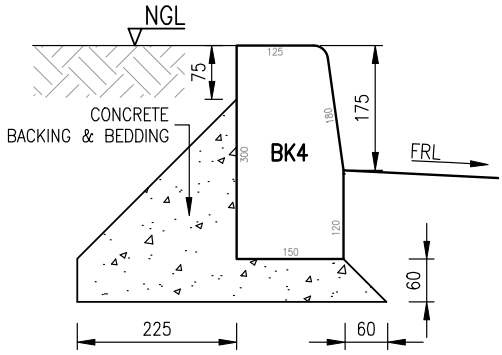

BK4 BARRIER KERB ONLY

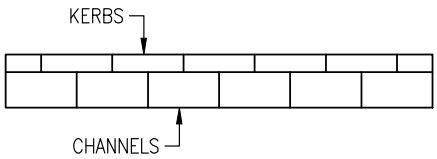

STAGGERING OF KERBS AND CHANNELS

NOTES:

1. ALL UNITS MUST BE LAID WITH CLASS 20/20 CONCRETE BEDDING/BACKING,
2. UNLESS SHOWN OTHERWISE, ON SUBGRADE/SUBBASE COMPACTED TO THE REQUIRED SPECIFICATIONS.
3. CHANNELS SHALL BE INFALL. NO OUTFALL CHANNELS PERMITTED.
4. KERBS AND CHANNELS SHALL CONFORM TO SANS 927.
5. ALL RADII < 20m SHALL BE BUILT WITH 300/330mm LONG ELEMENTS.
6. ALL PRECAST UNITS LAID LONGITUDINALLY NEXT TO ONE ANOTHER SHALL BE STAGGERED.
7. ALL KERB JOINTS TO BE WATER SPRAYED BEFORE CAULKING.
8. CAULKING BETWEEN KERBS TO HAVE A CEMENT:SAND RATIO OF 1:3.
9. EXPANSION JOINTS ON KERBING:
   - SHALL BE 10mm WIDE, SPACED AT 10m c/c.
   - FILLED WITH FOAMED POLYSTYRENE (OR EQUIVALENT APPROVED)
   - SEALED WITH 20mm X 10mm SILICONE SEALANT (OR EQUIVALENT APPROVED)
10. REFER TO **DRAWING RD1.10** FOR REMOVABLE BARRIER KERBS.

NGL: NATURAL GROUND LEVEL
FRL: FINISHED ROAD LEVEL
FSL: FINISHED SURFACE LEVEL

CITY OF CAPE TOWN
ISIXEKO SASEKAPA
STAD KAAPSTAD

CITY OF CAPE TOWN
URBAN MOBILITY

TITLE

BARRIER KERBS AND CHANNELS

STANDARDS AND GUIDELINES DETAILS

SCALE	PAPER
1:10	A4
DRAWING No.	REV
RD1.1	C

P:\CAD\R&SD\TT_01 Design\T_1000B Standards\T_1000RS DESIGN_Roads and Stormwater\0002 Drawings_Version4.0\01 RD\RD1.1 - BK Kerbs & C1 Channels_RevC.dwg

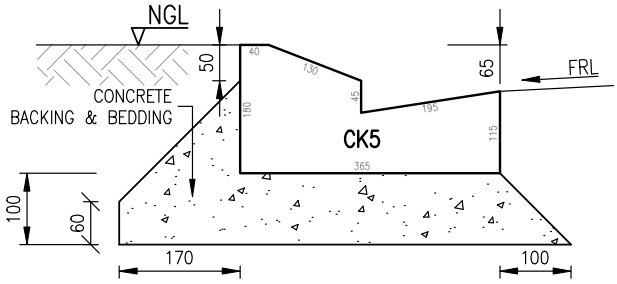

CK5 MOUNTABLE KERB & CHANNEL COMBINATION

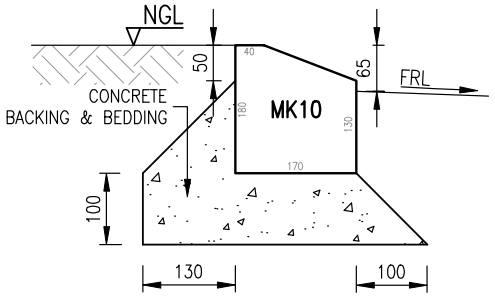

MK10 MOUNTABLE KERB ONLY

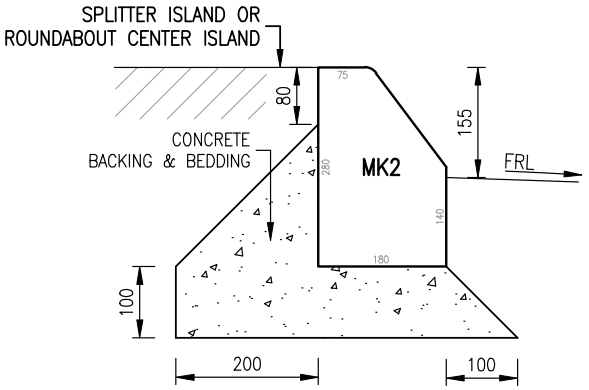

MK2

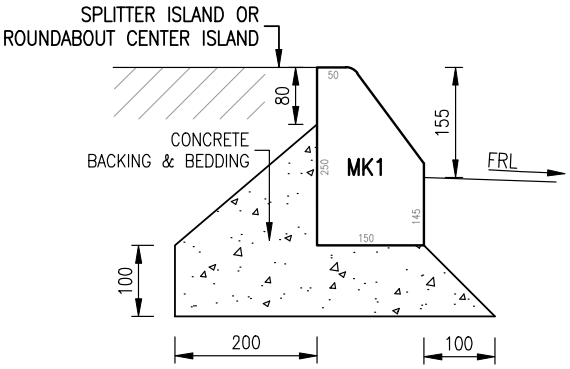

MK1

SEMI–MOUNTABLE KERB ONLY
(FOR SPLITTER ISLANDS AND CENTER ISLAND AT ROUNDABOUTS)

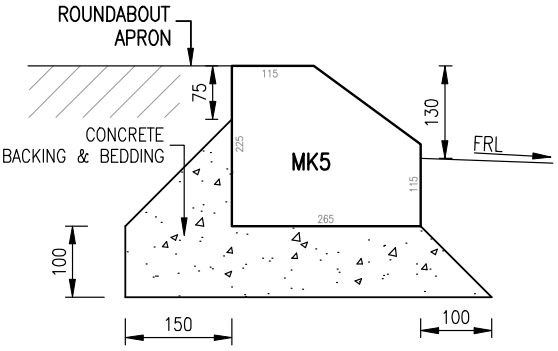

MK5 MOUNTABLE KERB
(FOR APRON AT ROUNDABOUTS)

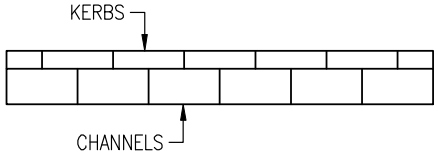

STAGGERING OF KERBS AND CHANNELS

NOTES:

1. ALL UNITS MUST BE LAID WITH CLASS 20/20 CONCRETE BEDDING/BACKING,
2. UNLESS SHOWN OTHERWISE, ON SUBGRADE/SUBBASE COMPACTED TO THE REQUIRED SPECIFICATIONS.
3. CHANNELS SHALL BE INFALL. NO OUTFALL CHANNELS PERMITTED.
4. KERBS AND CHANNELS SHALL CONFORM TO SANS 927.
5. ALL RADII < 20m SHALL BE BUILT WITH 300/330mm LONG ELEMENTS.
6. ALL PRECAST UNITS LAID LONGITUDINALLY NEXT TO ONE ANOTHER SHALL BE STAGGERED.
7. ALL KERB JOINTS TO BE WATER SPRAYED BEFORE CAULKING.
8. CAULKING BETWEEN KERBS TO HAVE A CEMENT:SAND RATIO OF 1:3.
9. EXPANSION JOINTS ON KERBING:
   - SHALL BE 10mm WIDE, SPACED AT 10m c/c.
   - FILLED WITH FOAMED POLYSTYRENE (OR EQUIVALENT APPROVED)
   - SEALED WITH 20mm X 10mm SILICONE SEALANT (OR EQUIVALENT APPROVED)

NGL: NATURAL GROUND LEVEL
FRL: FINISHED ROAD LEVEL
FSL: FINISHED SURFACE LEVEL

CITY OF CAPE TOWN
ISIXEKO SASEKAPA
STAD KAAPSTAD

CITY OF CAPE TOWN
URBAN MOBILITY

TITLE

MOUNTABLE AND SEMI-MOUNTABLE KERBS AND CHANNELS

STANDARDS AND GUIDELINES DETAILS

SCALE	PAPER
1:10	A4
DRAWING No.	REV
RD1.2	C

P:\CAD\R&SD\TT_01 Design\T_1000B Standards\T_1000RS DESIGN_Roads and Stormwater\0002 Drawings_Version4.0\01 RD\RD1.2 – MK Kerbs & C1 Channels_RevC.dwg

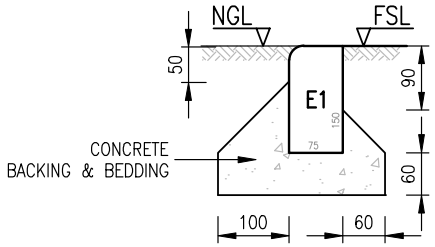

LIGHT DUTY EDGING

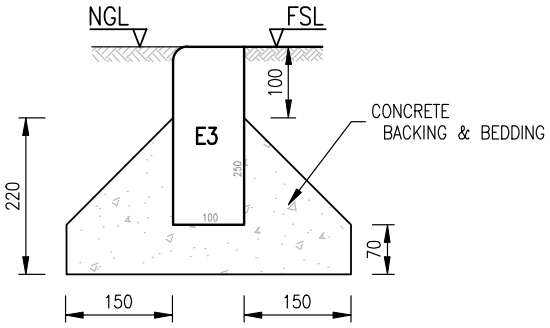

HEAVY DUTY EDGING

NOTES:

1. ALL UNITS MUST BE LAID WITH CLASS 20/20 CONCRETE BEDDING/BACKING, UNLESS SHOWN OTHERWISE, ON SUBGRADE/SUBBASE COMPACTED TO THE REQUIRED SPECIFICATIONS.
2. ALL RADII < 20m MUST BE BUILT WITH 300/330mm LONG ELEMENTS.
3. EDGINGS USAGE SHALL BE IN ACCORDANCE WITH **SECTION 3.2.9**.
4. KERBS AND CHANNELS SHALL CONFORM TO SANS 927.

NGL: NATURAL GROUND LEVEL
FRL: FINISHED ROAD LEVEL
FSL: FINISHED SURFACE LEVEL

CITY OF CAPE TOWN
ISIXEKO SASEKAPA
STAD KAAPSTAD

CITY OF CAPE TOWN
URBAN MOBILITY

TITLE

EDGINGS

STANDARDS AND GUIDELINES DETAILS

SCALE	PAPER
1:10	A4
DRAWING No.	REV
RD1.3	C

P:\CAD\R&SD\ITL_01 Design\T_1000B Standards\T_1000RS DESIGN_Roads and Stormwater\0002 Drawings_Version4.0\01 RD\RD1.3 – Edgings_RevC.dwg

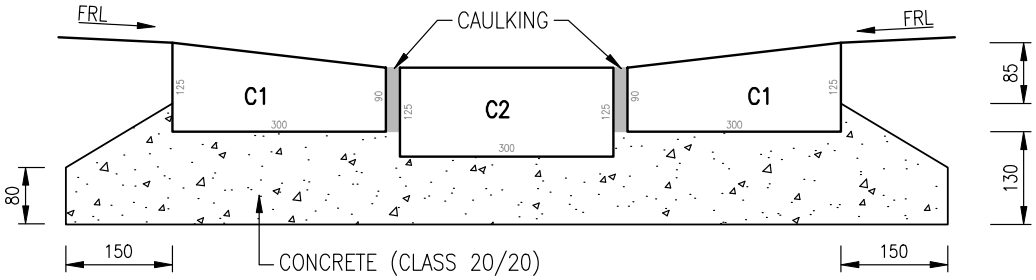

TRIPLE FLAT CHANNEL

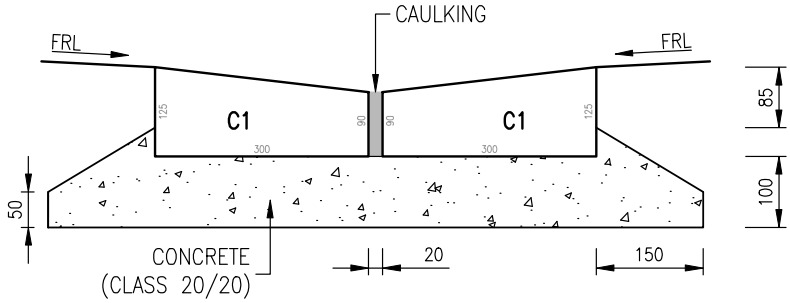

DOUBLE FLAT CHANNEL (V-CHANNEL)

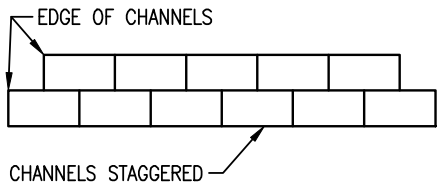

NOTES:

1. ALL UNITS MUST BE LAID WITH A CLASS 20/20 CONCRETE BEDDING/BACKING, UNLESS SHOWN OTHERWISE, ON SUBGRADE/SUBBASE COMPACTED TO THE REQUIRED SPECIFICATIONS
2. EDGINGS SHALL CONFORM TO SANS 927.
3. ALL RADII < 20m MUST BE BUILT WITH 300/330mm LONG ELEMENTS.
4. ALL PRECAST UNITS LAID LONGITUDINALLY NEXT TO ONE ANOTHER MUST BE STAGGERED.
5. ALL JOINTS TO BE WATER SPRAYED BEFORE CAULKING.
6. CAULKING TO HAVE A CEMENT:SAND RATIO OF 1:3.

NGL: NATURAL GROUND LEVEL
FRL: FINISHED ROAD LEVEL
FSL: FINISHED SURFACE LEVEL

CITY OF CAPE TOWN
ISIXEKO SASEKAPA
STAD KAAPSTAD

CITY OF CAPE TOWN
URBAN MOBILITY

TITLE

DOUBLE & TRIPLE FLAT CHANNELS

STANDARDS AND GUIDELINES DETAILS

SCALE	PAPER
1:10	A4
DRAWING No.	REV
RD1.4	C

P:\CAD\R&SD\ITL_01 Design\T_1000B Standards\T_1000RS DESIGN_Roads and Stormwater\0002 Drawings_Version4.0\01 RD\RD1.4 - Flat channels_RevC.dwg

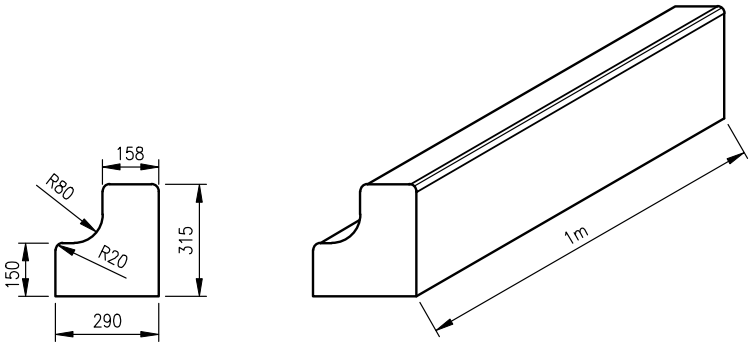

KASSEL KERB TYPICAL DIMENSIONS

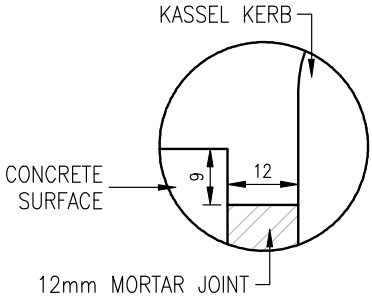

DETAIL 1

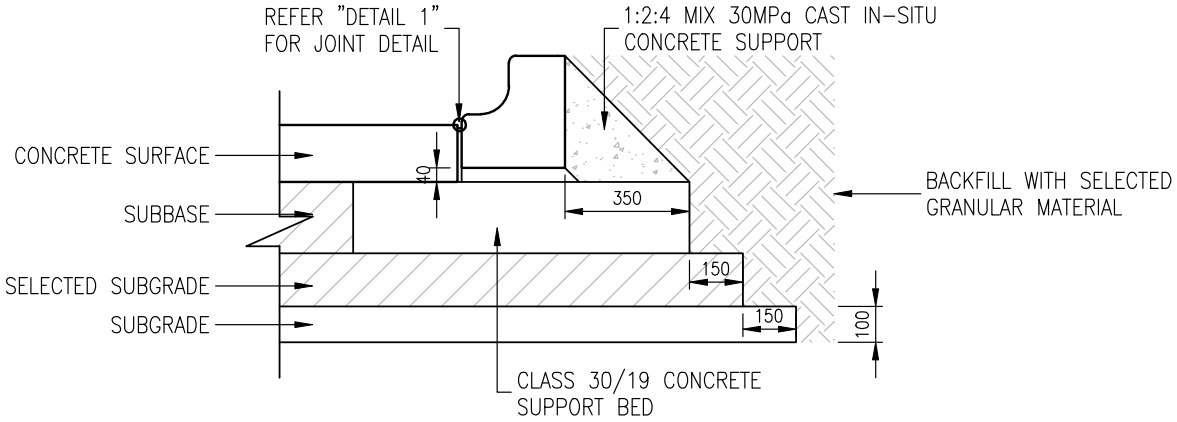

KASSEL KERB ALONG ROADWAY

NOTES:

1. REFER TO CHAPTER 8 FOR ROAD PAVEMENT DESIGN REQUIREMENTS.

CITY OF CAPE TOWN
ISIXEKO SASEKAPA
STAD KAAPSTAD

CITY OF CAPE TOWN
URBAN MOBILITY

TITLE

KASSEL KERB

STANDARDS AND GUIDELINES DETAILS

SCALE	PAPER
1:20	A4
DRAWING No.	REV
RD1.5	A

P:\CAD\R&SD\ITL_01 Design\T_1000B Standards\T_1000RS DESIGN_Roads and Stormwater\0002 Drawings_Version4.0\01 RD\RD1.5 - Kassel kerb_RevA.dwg

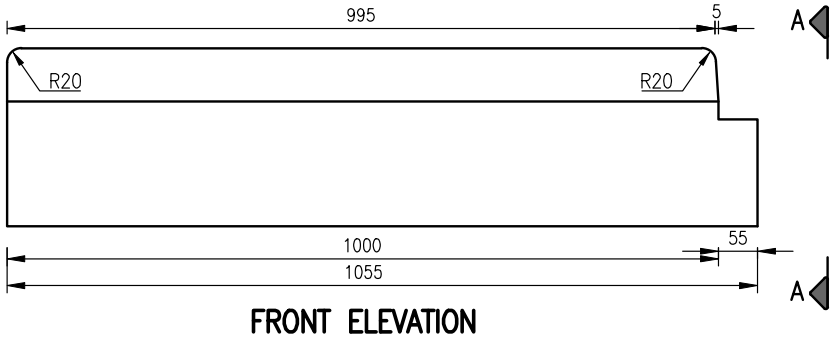

FRONT ELEVATION

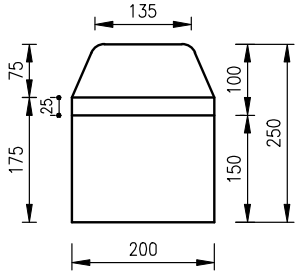

SECTION A–A

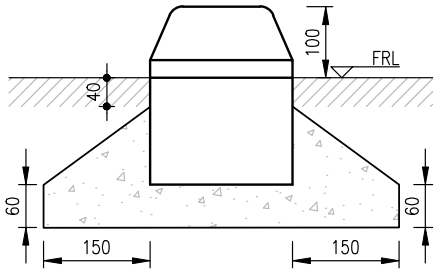

TYPICAL INSTALLATION DETAILS
(NOT FOR IRT SYSTEMS)

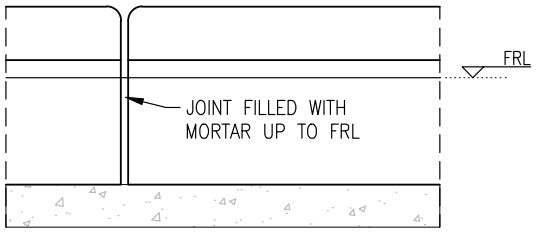

PLACEMENT A: JOINT DETAIL

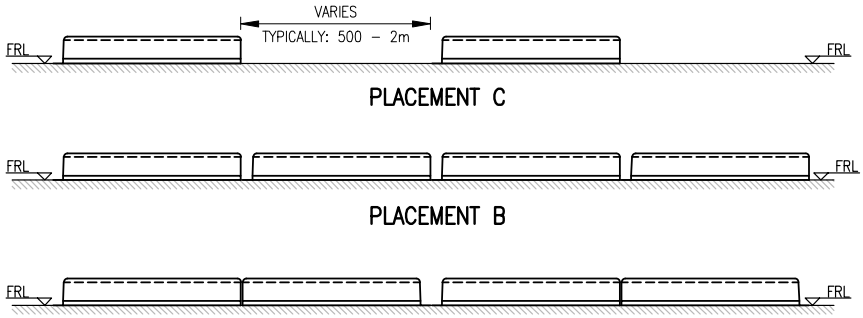

TYPICAL PLACEMENT OPTIONS
SCALE 1:40

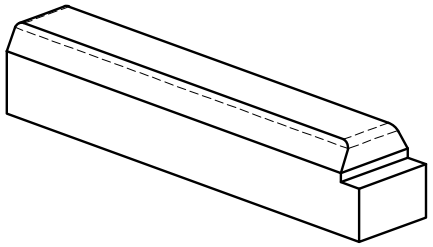

ISOMETRIC VIEW
N.T.S.

NOTES:

1. UNITS SHALL BE LAID WITH CLASS 30/20 CONCRETE BEDDING/BACKING, UNLESS SHOWN OTHERWISE, ON SUBGRADE/SUBBASE COMPACTED TO THE REQUIRED SPECIFICATIONS.
2. THE TOP EDGES SHALL BE ROUNDED WITH A RADIUS OF 20mm. FOR ALL OTHER EDGES, A ROUNDING RADIUS OF 3mm MAY BE CONSIDERED, IF SPALLING IS A CONCERN.
3. KERB SHALL CONFORM TO SANS 927.
4. WHERE DELINEATOR KERBS ARE USED INSIDE ROADS OR ADJACENT TO TRAFFIC LANES, IT SHALL BE PAINTED WITH A RETRO-REFLECTIVE YELLOW PAINT.
5. THE USE OF DELINEATOR KERBS TO SEGREGATE TRAFFIC LANES SHALL ADHERE TO THE FOLLOWING:
   - TRAVEL SPEEDS UP TO 65km/h : DK3 TYPE (KERB HEIGHT OF 150mm)
   - TRAVEL SPEEDS EXCEEDING 65km/h : DK2 TYPE (KERB HEIGHT OF 100mm)

FRL: FINAL ROAD LEVEL

SHEET INDEX:

SHEET 1: DELINEATOR KERB: DK2 (100mm HEIGHT)
SHEET 2: DELINEATOR KERB: DK3 (150mm HEIGHT)

CITY OF CAPE TOWN
ISIXEKO SASEKAPA
STAD KAAPSTAD

CITY OF CAPE TOWN
URBAN MOBILITY

TITLE

DELINEATOR KERB: DK2

(100mm HEIGHT)

STANDARDS AND GUIDELINES DETAILS

SHEET 1

SCALE	PAPER
1:10	A4
DRAWING No.	REV
RD1.6A	A

P:\CAD\R&SD\ITL_01 Design\T_1000B Standards\T_1000RS DESIGN_Roads and Stormwater\0002 Drawings_Version4.0\01 RD\RD1.6A – Delineator Kerb_DK2_RevA.dwg

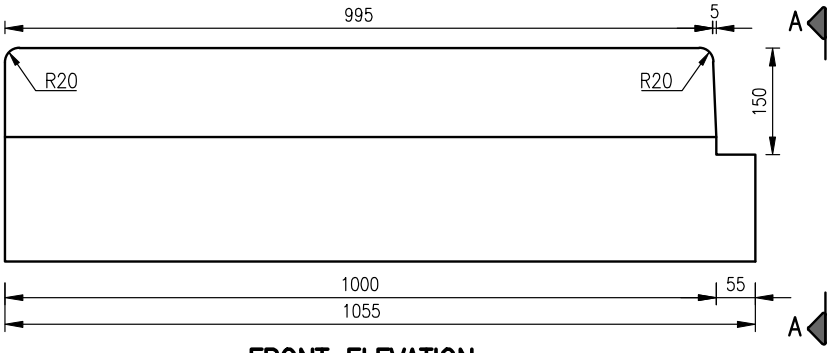

FRONT ELEVATION

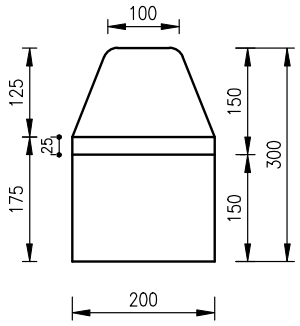

SECTION A–A

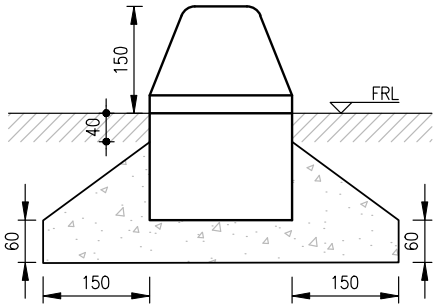

TYPICAL INSTALLATION DETAILS
(NOT FOR IRT SYSTEMS)

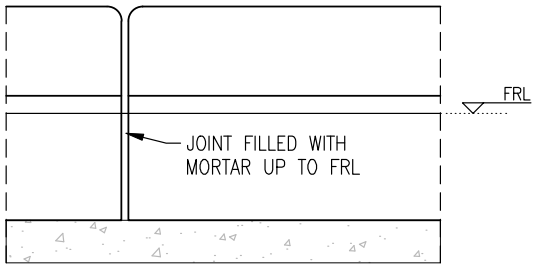

PLACEMENT A: JOINT DETAIL

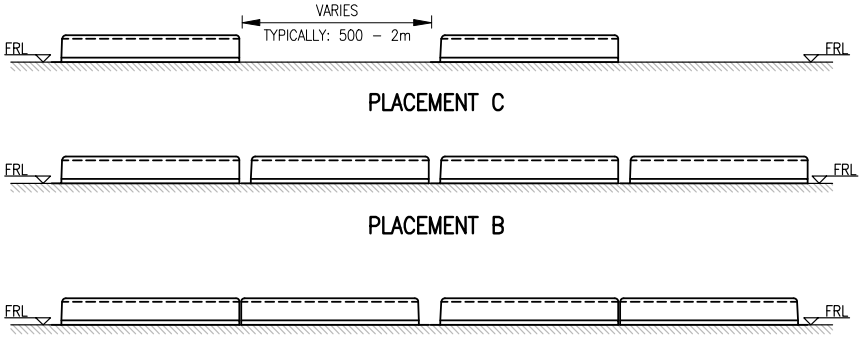

TYPICAL PLACEMENT OPTIONS
SCALE 1:40

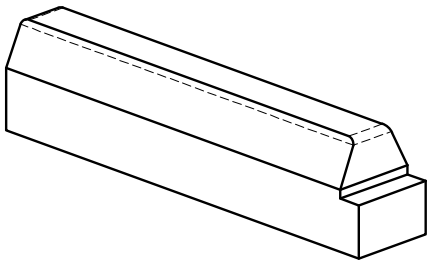

ISOMETRIC VIEW
N.T.S.

NOTES:

1. UNITS SHALL BE LAID WITH CLASS 30/20 CONCRETE BEDDING/BACKING, UNLESS SHOWN OTHERWISE, ON SUBGRADE/SUBBASE COMPACTED TO THE REQUIRED SPECIFICATIONS.
2. THE TOP EDGES SHALL BE ROUNDED WITH A RADIUS OF 20mm. FOR ALL OTHER EDGES, A ROUNDING RADIUS OF 3mm MAY BE CONSIDERED, IF SPALLING IS A CONCERN.
3. KERB SHALL CONFORM TO SANS 927.
4. WHERE DELINEATOR KERBS ARE USED INSIDE ROADS OR ADJACENT TO TRAFFIC LANES, IT SHALL BE PAINTED WITH A RETRO-REFLECTIVE YELLOW PAINT.
5. THE USE OF DELINEATOR KERBS TO SEGREGATE TRAFFIC LANES SHALL ADHERE TO THE FOLLOWING:
   - TRAVEL SPEEDS UP TO 65km/h : DK3 TYPE (KERB HEIGHT OF 150mm)
   - TRAVEL SPEEDS EXCEEDING 65km/h : DK2 TYPE (KERB HEIGHT OF 100mm)

FRL: FINAL ROAD LEVEL

SHEET INDEX:
SHEET 1: DELINEATOR KERB: DK2 (100mm HEIGHT)
SHEET 2: DELINEATOR KERB: DK3 (150mm HEIGHT)

CITY OF CAPE TOWN
ISIXEKO SASEKAPA
STAD KAAPSTAD

CITY OF CAPE TOWN
URBAN MOBILITY

TITLE

DELINEATOR KERB: DK3
(150mm HEIGHT)

STANDARDS AND GUIDELINES DETAILS

SHEET 2

SCALE	PAPER
1:10	A4
DRAWING No.	REV
RD1.6B	A

P:\CAD\R&SD\TL_01 Design\T_1000B Standards\T_1000RS DESIGN_Roads and Stormwater\0002 Drawings_Version4.0\01 RD\RD1.6B – Delineator Kerb_DK3_RevA.dwg

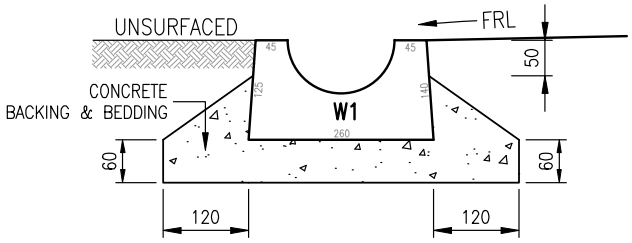

W1 WATER CHANNEL

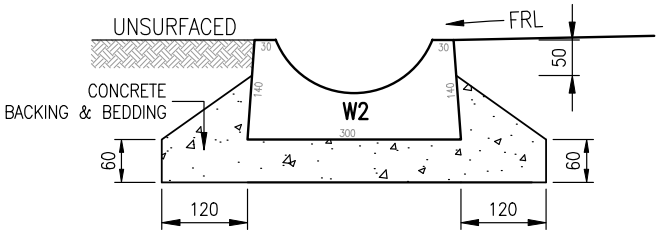

W2 WATER CHANNEL

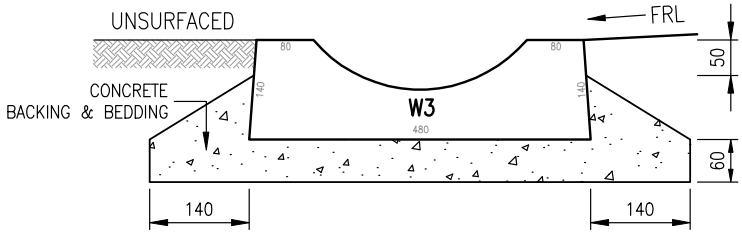

W3 WATER CHANNEL

NOTES:

1. ALL UNITS MUST BE LAID WITH A CLASS 20/20 CONCRETE BEDDING/BACKING, UNLESS SHOWN OTHERWISE, ON SUBGRADE/SUBBASE COMPACTED TO THE REQUIRED SPECIFICATIONS.
2. ALL JOINTS TO BE WATER SPRAYED BEFORE CAULKING.
3. CAULKING TO HAVE A CEMENT:SAND RATIO OF 1:3.

NGL: NATURAL GROUND LEVEL
FRL: FINISHED ROAD LEVEL
FSL: FINISHED SURFACE LEVEL

CITY OF CAPE TOWN
ISIXEKO SASEKAPA
STAD KAAPSTAD

CITY OF CAPE TOWN
URBAN MOBILITY

TITLE

WATER CHANNELS

STANDARDS AND GUIDELINES DETAILS

SCALE	PAPER
1:10	A4
DRAWING No.	REV
RD1.7	B

P:\CAD\R&SD\TT_01 Design\T_1000B Standards\T_1000RS DESIGN_Roads and Stormwater\0002 Drawings_Version4.0\01 RD\RD1.7 – Water Channels_RevB.dwg

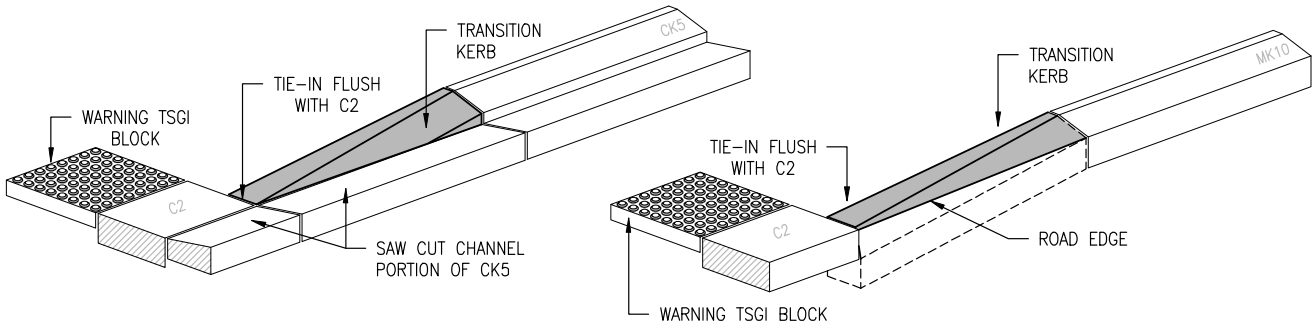

KERB AND CHANNEL PRESENT **KERB ONLY**

APPLICATION OF TRANSITION KERB AT UNIVERSAL ACCESS RAMP

TRANSITION KERBS ONLY SHOWN IN SINGLE DIRECTION

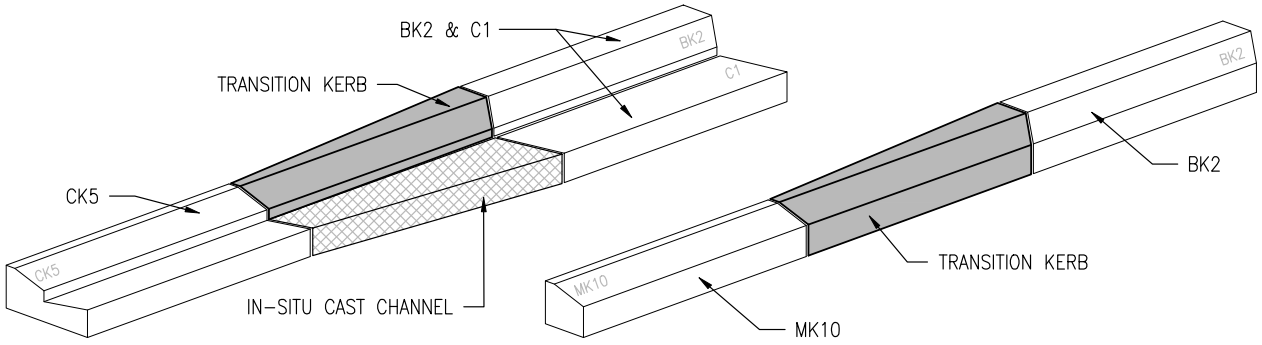

KERB AND CHANNEL PRESENT **KERB ONLY**

APPLICATION OF TRANSITION KERB ALONG NORMAL ROADWAY KERBLINE

DETAILS

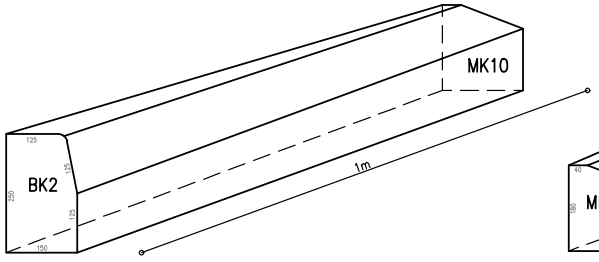

BK2 to MK10

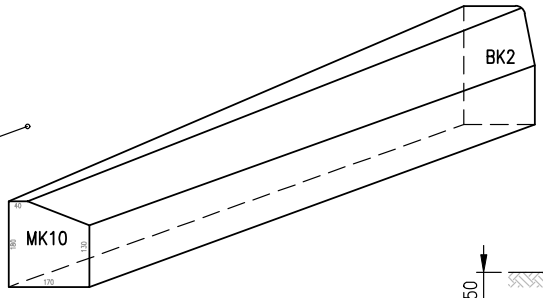

MK10 to BK2

ISOMETRIC ILLUSTRATION OF TRANSITION KERB

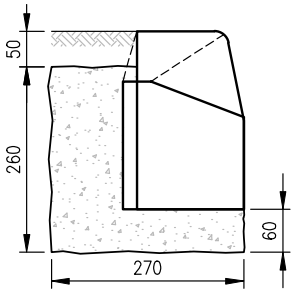

BEDDING & BACKING DETAILS

NOTES:

1. TRANSITION KERBS SHALL BE MANUFACTURED OR CASTED OFF-SITE AND INSTALLED AS PRECAST UNITS.
2. TRANSITION KERBS SHALL BE CONCRETE CLASS 25/20.
3. ALL UNITS MUST BE LAID WITH CLASS 20/20 CONCRETE BEDDING/BACKING, UNLESS SHOWN OTHERWISE.
4. TRANSITION KERB SHALL NOT BE USED ON RADII.
5. IN-SITU CASTED CHANNELS SHALL BE CONCRETE CLASS 30/20.
6. DRAWING TO BE READ IN CONJUNCTION WITH DRAWINGS: RD1.1 , RD1.2, RD 4 series

CITY OF CAPE TOWN
ISIXEKO SASEKAPA
STAD KAAPSTAD

CITY OF CAPE TOWN
URBAN MOBILITY

TITLE

TRANSITION KERB

STANDARDS AND GUIDELINES DETAILS

SCALE	PAPER
NTS	A4
DRAWING No.	REV
RD1.8	A

P:\CAD\R&SD\ITI_01 Design\T_1000B Standards\T_1000RS DESIGN_Roads and Stormwater\0002 Drawings_Version4.0\01 RD\RD1.8 - BK-MK Transition Kerb_RevA.dwg

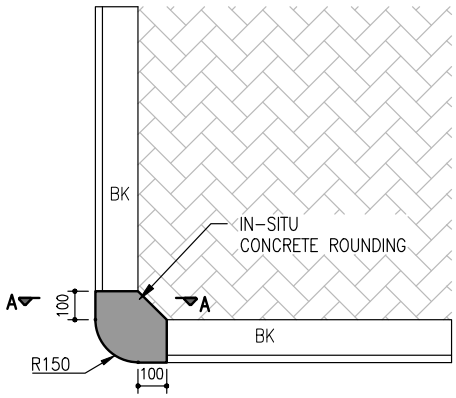

PLAN VIEW
1:25

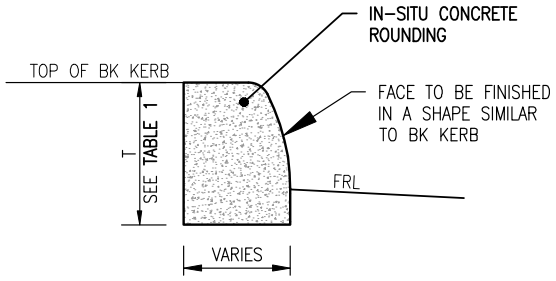

SECTION A-A
1:10

KERB ROUNDING

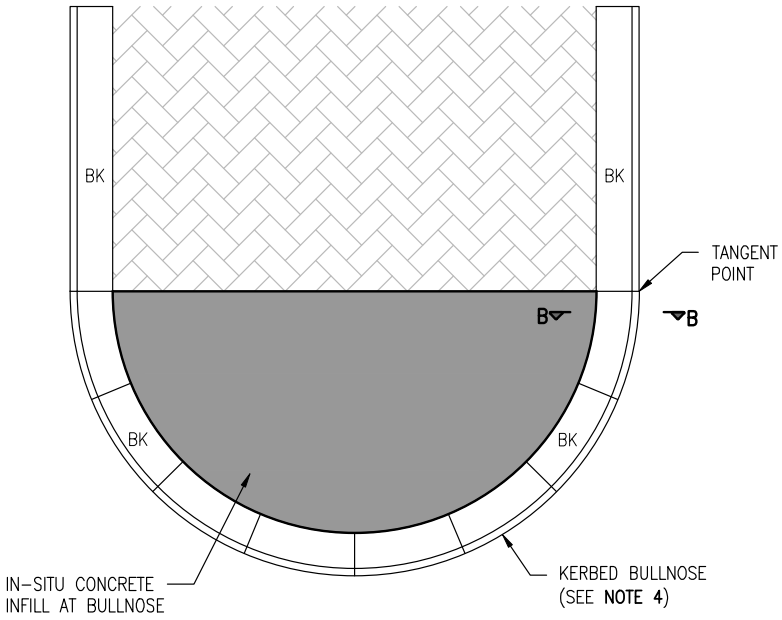

PLAN VIEW
1:25

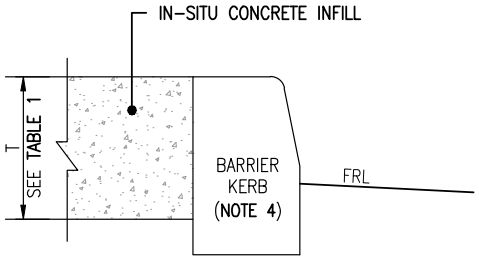

SECTION B-B
1:10

KERB BULLNOSE INFILL

TABLE 1	
KEBR TYPE	CONCRETE THICKNESS (T)
BK2	200
BK4	250

NOTES:

1. ALL IN-SITU CONCRETE SHALL BE CLASS 35/20.
2. THE THICKNESS OF THE CONCRETE SHALL DEPEND ON THE TYPE OF BARRIER KERB PRESENT. SEE TABLE 1.
3. WHERE TRAFFIC SIGN SUPPORTS (POLES) MUST BE INSTALLED INSIDE THE CONCRETE INFILL SECTION AT A KERBED BULLNOSE, SUCH SUPPORTS SHALL BE INSTALLED PRIOR TO THE PLACEMENT OF THE IN-SITU CONCRETE.
4. THE KERBED BULLNOSE MAY ALSO BE CONSTRUCTED AS IN-SITU CONCRETE, SIMILAR TO "KERB ROUNDING" DETAIL ABOVE.

FRL: FINISHED ROAD LEVEL

CITY OF CAPE TOWN
ISIXEKO SASEKAPA
STAD KAAPSTAD

CITY OF CAPE TOWN
URBAN MOBILITY

TITLE

KERB ROUNDING & BULLNOSE

STANDARDS AND GUIDELINES DETAILS

SCALE	PAPER
SHOWN	A4
DRAWING No.	REV
RD1.9	A

P:\CAD\R&SD\ITL_01 Design\T_1000B Standards\T_1000RS DESIGN_Roads and Stormwater\0002 Drawings_Version4.0\01 RD\RD1.9 - Kerb Rounding_Bullnose_RevA.dwg

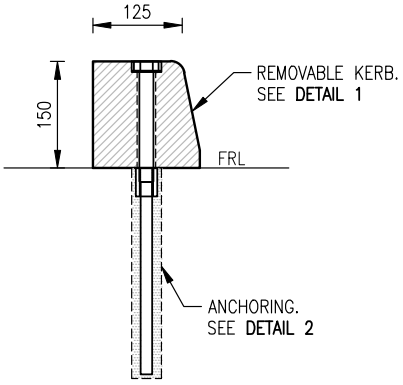

SECTION C–C
1:10

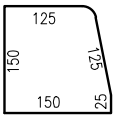

DETAIL 1:
KERB DIMENSIONS
1:5

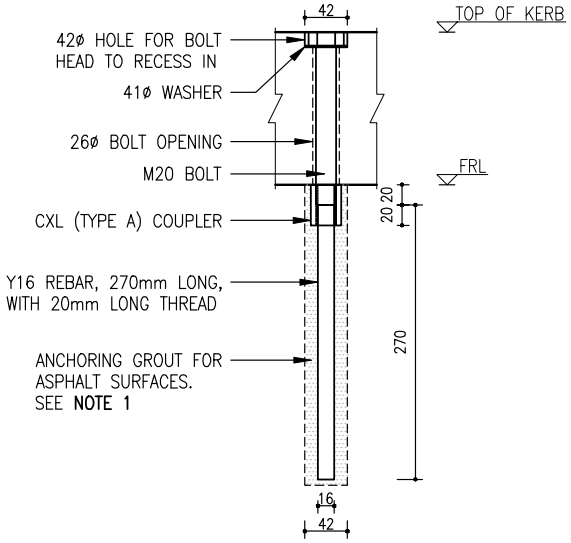

DETAIL 2:
ANCHORING
N.T.S.

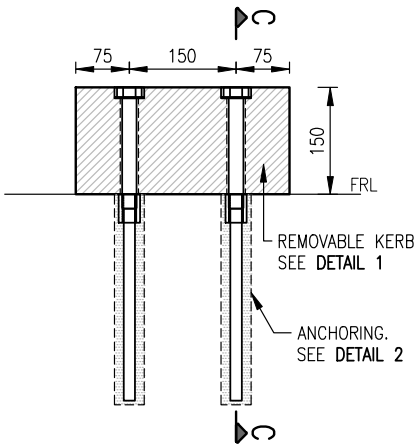

SECTION A–A
1:10

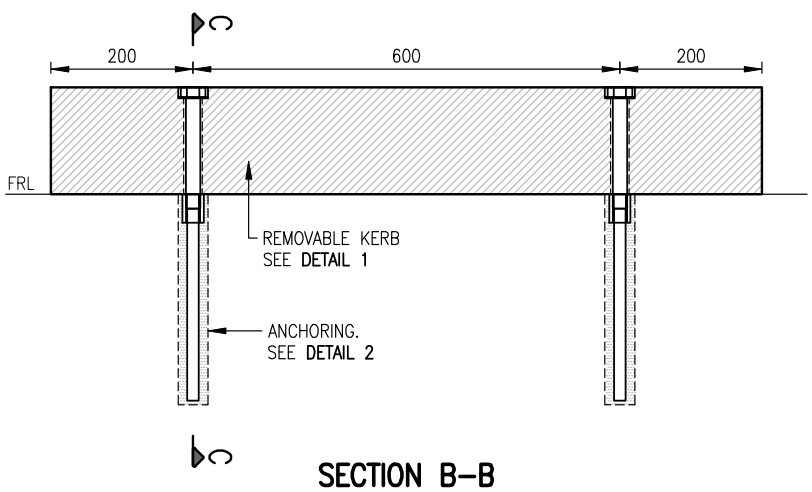

SECTION B–B
1:10

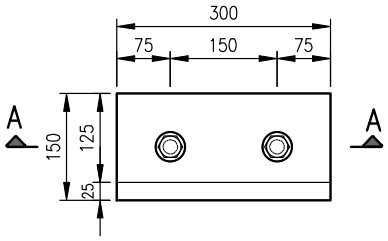

PLAN VIEW
1:10

300mm LONG UNIT

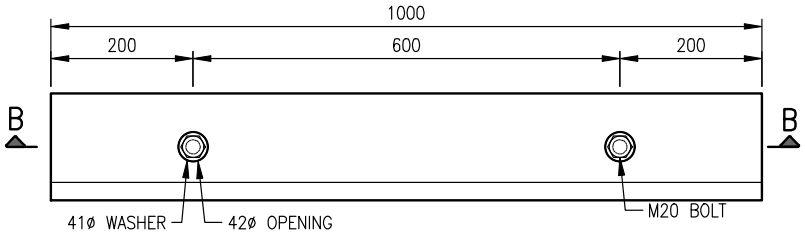

PLAN VIEW
1:10

1000mm LONG UNIT

NOTES:

1. THE PROPOSED ANCHORING GROUT SHALL BE SUBMITTED TO THE APPROVAL AUTHORITY PRIOR TO CONSTRUCTION.

NGL: NATURAL GROUND LEVEL
FRL: FINISHED ROAD LEVEL
FSL: FINISHED SURFACE LEVEL

CITY OF CAPE TOWN
ISIXEKO SASEKAPA
STAD KAAPSTAD

CITY OF CAPE TOWN
URBAN MOBILITY

TITLE

REMOVABLE BARRIER KERBS

STANDARDS AND GUIDELINES DETAILS

SCALE	PAPER
SHOWN	A4
DRAWING No.	REV
RD1.10	A

P:\CAD\R&SD\ITI_01 Design\T_1000B Standards\T_1000RS DESIGN_Roads and Stormwater\0002 Drawings_Version4.0\01 RD\RD1.10 – Removable Barrier Kerbs_RevA.dwg

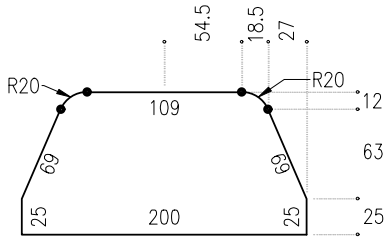

DETAIL 1: KERB DIMENSIONS
1:5

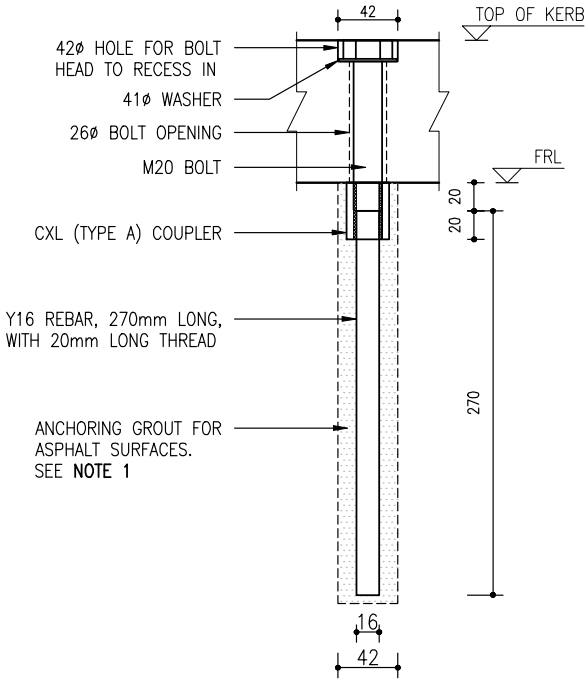

DETAIL 2: ANCHORING
N.T.S.

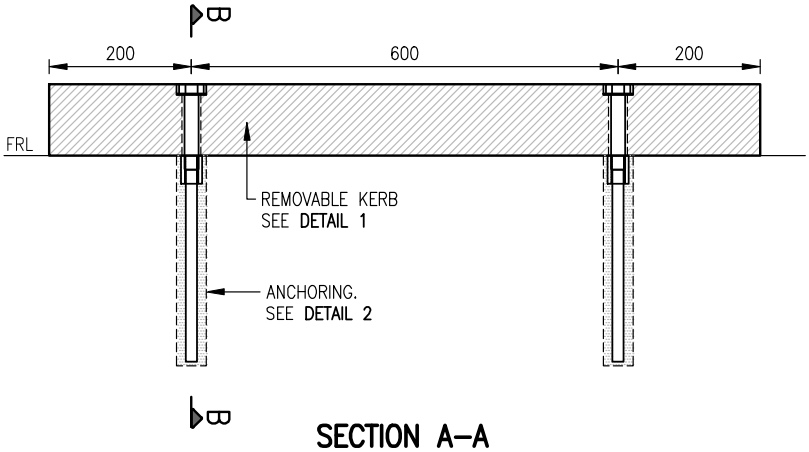

SECTION A–A
1:10

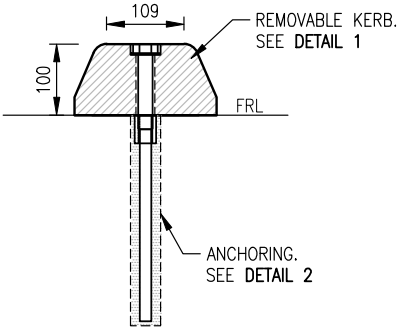

SECTION B–B
1:10

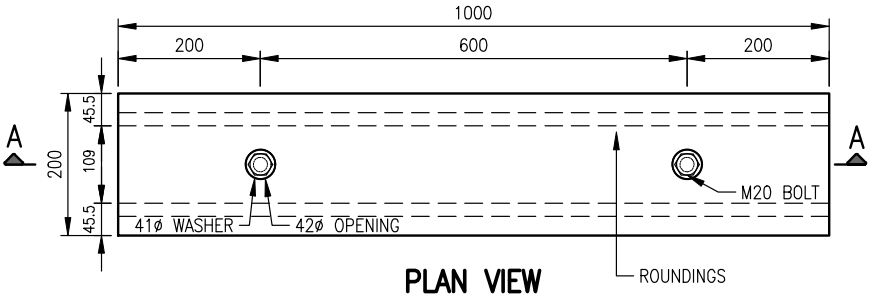

PLAN VIEW
1:10

NOTES:

1. THE TOP EDGES SHALL BE ROUNDED WITH A RADIUS OF 20mm.
2. FOR ALL OTHER EDGES, A ROUNDING RADIUS OF 3mm MAY BE CONSIDERED, IF SPALLING IS A CONCERN.
3. KERB SHALL CONFORM TO SANS 927.
4. THE PROPOSED ANCHORING GROUT SHALL BE SUBMITTED TO THE APPROVAL AUTHORITY PRIOR TO CONSTRUC
5. KERBS THAT ARE NO LONGER REQUIRED SHALL BE REMOVED AND THE VOIDS FILLED WITH A BITUMEN RUBBE CRACK SEALANT.

NGL: NATURAL GROUND LEVEL
FRL: FINISHED ROAD LEVEL
FSL: FINISHED SURFACE LEVEL

SHEET INDEX:
SHEET 1: REMOVABLE DELINEATOR KERB (DK2)
SHEET 2: REMOVABLE DELINEATOR KERB (DK3)

CITY OF CAPE TOWN
ISIXEKO SASEKAPA
STAD KAAPSTAD

CITY OF CAPE TOWN
URBAN MOBILITY

TITLE

REMOVABLE DELINEATOR KERB TYPE: DK2

STANDARDS AND GUIDELINES DETAILS

SHEET 1

SCALE	PAPER
SHOWN	A4
DRAWING No.	REV
RD1.11A	A

P:\CAD\R&SD\TT_01 Design\T_1000B Standards\T_1000RS DESIGN_Roads and Stormwater\0002 Drawings_Version4.0\01 RD\RD1.11A – Removable Delineator Kerbs DK2_RevA.dwg

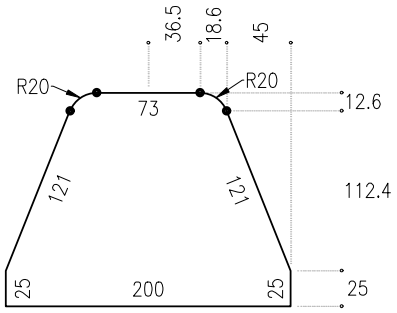

DETAIL 1: KERB DIMENSIONS
1:5

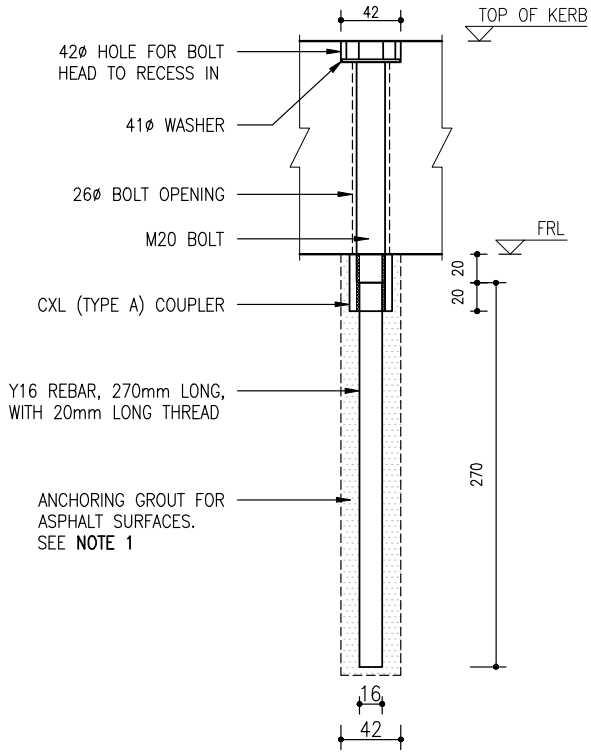

DETAIL 2: ANCHORING
N.T.S.

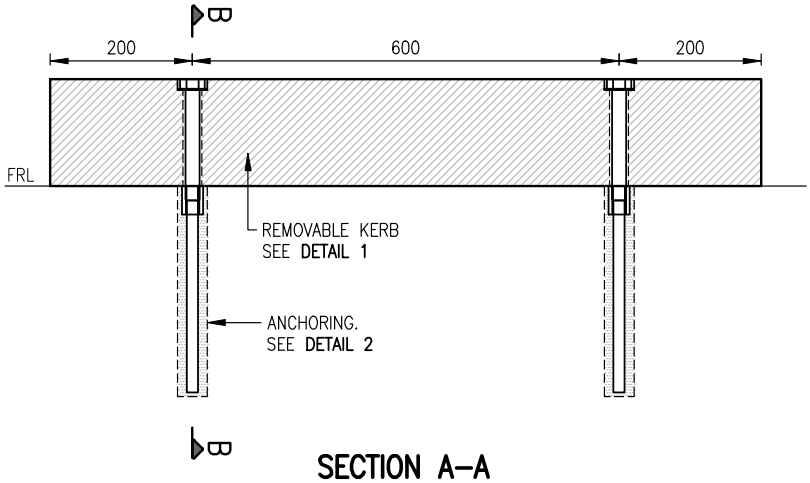

SECTION A–A
1:10

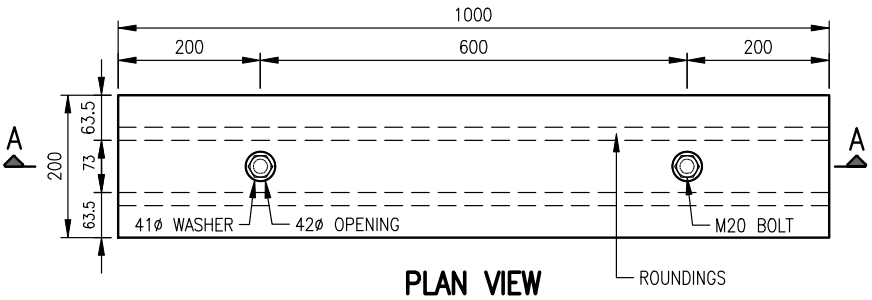

PLAN VIEW
1:10

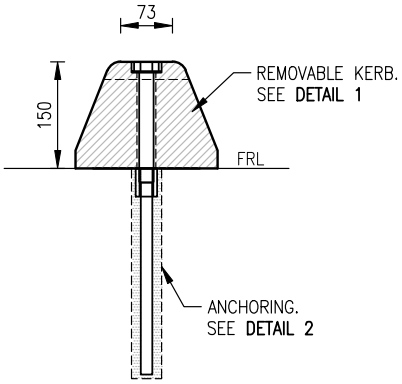

SECTION B–B
1:10

NOTES:

1. THE TOP EDGES SHALL BE ROUNDED WITH A RADIUS OF 20mm.
2. FOR ALL OTHER EDGES, A ROUNDING RADIUS OF 3mm MAY BE CONSIDERED, IF SPALLING IS A CONCERN.
3. KERB SHALL CONFORM TO SANS 927.
4. THE PROPOSED ANCHORING GROUT SHALL BE SUBMITTED TO THE APPROVAL AUTHORITY PRIOR TO CONSTRUCTION.
5. KERBS THAT ARE NO LONGER REQUIRED SHALL BE REMOVED AND THE VOIDS FILLED WITH A BITUMEN RUBBER CRACK SEALANT.

NGL: NATURAL GROUND LEVEL
FRL: FINISHED ROAD LEVEL
FSL: FINISHED SURFACE LEVEL

SHEET INDEX:

SHEET 1: REMOVABLE DELINEATOR KERB (DK2)
SHEET 2: REMOVABLE DELINEATOR KERB (DK3)

CITY OF CAPE TOWN
ISIXEKO SASEKAPA
STAD KAAPSTAD

CITY OF CAPE TOWN
URBAN MOBILITY

TITLE

REMOVABLE DELINEATOR KERB TYPE: DK3

STANDARDS AND GUIDELINES DETAILS

SHEET 2

SCALE	PAPER
SHOWN	A4
DRAWING No.	REV
RD1.11B	A

P:\CAD\R&SD\TL_01 Design\T_1000B Standards\T_1000RS DESIGN_Roads and Stormwater\0002 Drawings_Version4.0\01 RD\RD1.11B – Removable Delineator Kerbs DK3_RevA.dwg

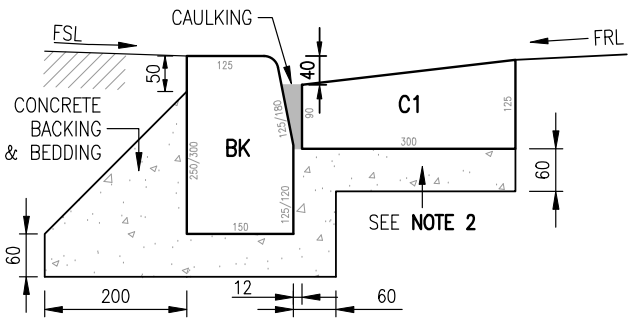

TYPE A1
BARRIER KERB & CHANNEL

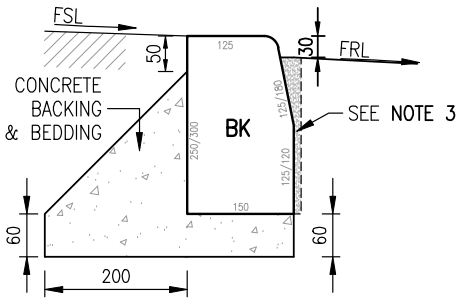

TYPE A2
BARRIER KERB ONLY

BARRIER KERBS

'TYPE A' NOTES:

TYPE A1

1. WHERE EXISTING BARRIER KERBS MUST BE DROPPED TO PROVIDE ACCESS FOR AN EMBAYMENT, OFF-STREET PARKING OR CARRIAGEWAY CROSSING, ONLY THE BARRIER KERB MUST BE LOWERED TO THE REDUCED HEIGHT. THE CHANNELS AND ROAD EDGE TO REMAIN UNDISTURBED.
2. WHERE NEW CHANNELS MUST BE LAID FOR AN EMBAYMENT, OFF-STREET PARKING OR CARRIAGEWAY CROSSING, THE THICKNESS OF THE BEDDING UNDERNEATH THE CHANNEL SHALL BE INCREASED TO 100mm ALONG THE ENTIRE LENGTH OF THE DROPPED SECTION.

TYPE A2

3. THE BARRIER KERB SHALL BE CAREFULLY REMOVED, WITHOUT DISTURBING THE ADJACENT ROAD PAVEMENT, AND INSTALLED AT THE REDUCED HEIGHT. THE REMAINING GAP SHALL BE ADEQUATELY FILLED WITH A CEMENTITIOUS GROUT. WHERE THE ROAD PAVEMENT IS DISTURBED, 300mm OF THE EXISTING ASPHALT SURFACE SHALL BE CUT (WITH A MECHANICAL SAW CUTTER, IN A NEAT AND STRAIGHT LINE) AND REINSTATED USING ASPHALT AS PER THE REQUIREMENTS OF THE APPROVAL AUTHORITY .

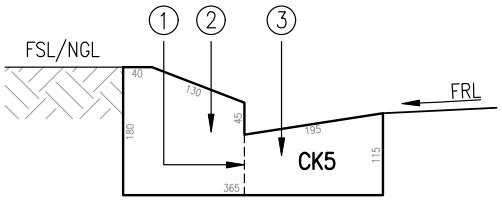

SAWING OF CK5 KERB

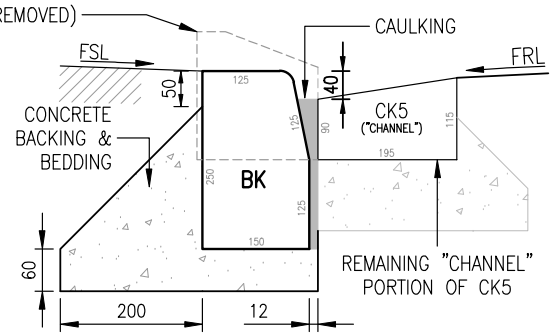

LAYING OF DROPPED BARRIER KERB

'TYPE B' NOTES: SAWING OF CK5 KERB

① MECHANICALLY SAW CK5 KERB ALONG VERTICAL FACE.
② REMOVE "KERB" PORTION OF CK5.
③ "CHANNEL" PORTION OF CK5, INCLUDING ROAD EDGE, TO REMAIN INTACT/UNDISTURBED.

GENERAL NOTES:

1. ALL UNITS MUST BE LAID WITH A CLASS 20/20 CONCRETE BEDDING/BACKING, UNLESS SHOWN OTHERWISE, ON SUBGRADE/SUBBASE COMPACTED TO THE REQUIRED SPECIFICATIONS.
2. ALL KERB JOINTS TO BE WATER SPRAYED BEFORE CAULKING.
3. CAULKING BETWEEN KERBS TO HAVE A CEMENT:SAND RATIO OF 1:3.

TYPE B
EXISTING MOUNTABLE KERBS

NGL: NATURAL GROUND LEVEL
FRL: FINISHED ROAD LEVEL
FSL: FINISHED SURFACE LEVEL

SHEET INDEX:
SHEET 1: VEHICULAR TRAVERSAL
SHEET 2: PEDESTRIAN RAMPS

CITY OF CAPE TOWN
ISIXEKO SASEKAPA
STAD KAAPSTAD

CITY OF CAPE TOWN
URBAN MOBILITY

TITLE

DROPPED KERB TYPES
VEHICULAR TRAVERSAL
STANDARDS AND GUIDELINES DETAILS

SHEET 1

SCALE	PAPER
1:10	A4
DRAWING No.	REV
RD2.1	B

P:\CAD\R&SD\ITI_01 Design\T_1000B Standards\T_1000RS DESIGN_Roads and Stormwater\0002 Drawings_Version4.0\01 RD\RD2.1 – Dropped Kerb Types – Vehicular Traversal_RevB.dwg

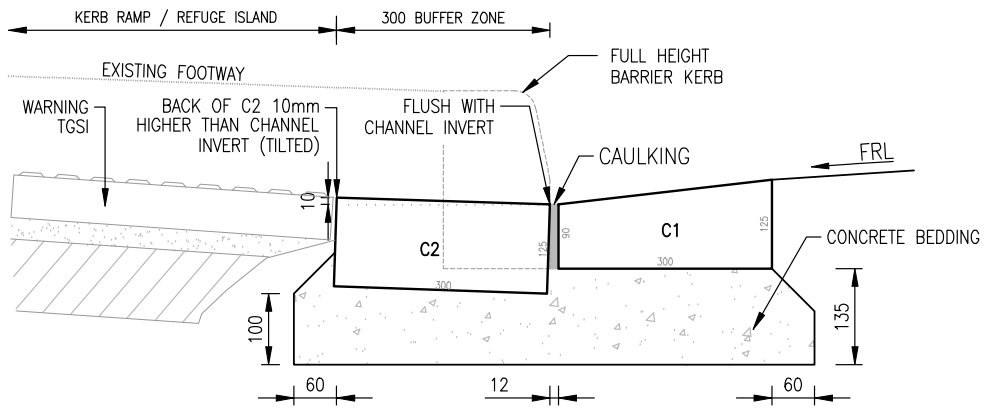

TYPE E: C2 AND C1 CHANNELS

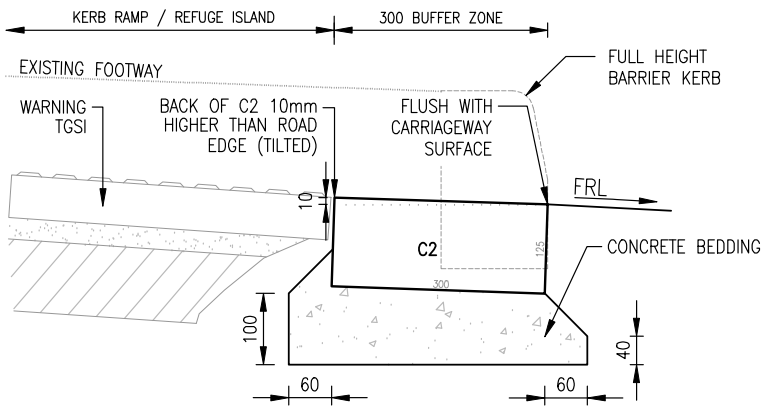

TYPE F: C2 CHANNEL ONLY

PEDESTRIAN RAMP

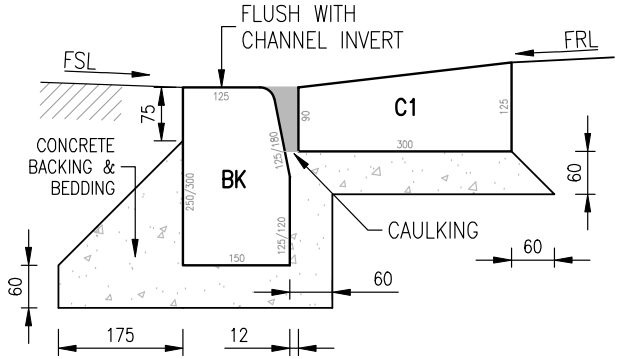

TYPE C: BARRIER KERB & CHANNEL

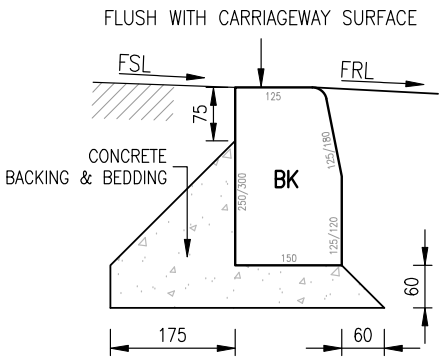

TYPE D: BARRIER KERB ONLY

NOTES:

General

1. ALL UNITS MUST BE LAID ON CLASS 20/20 CONCRETE BEDDING/BACKING, UNLESS SHOWN OTHERWISE, ON SUBGRADE/SUBBASE COMPACTED TO THE REQUIRED SPECIFICATIONS.
2. ALL KERB JOINTS TO BE WATER SPRAYED BEFORE CAULKING.
3. CAULKING BETWEEN KERBS TO HAVE A CEMENT:SAND RATIO OF 1:3.
4. REFER TO DRAWING SERIES **RD3** FOR DETAILS PERTAINING TO WHEELCHAIR, LOADING AND BICYCLE RAMPS.
5. REFER TO DRAWING SERIES **RD4** FOR DETAILS PERTAINING TO PEDESTRIAN RAMPS.

Type C

6. WHERE EXISTING BARRIER KERBS AND CHANNELS ARE PRESENT, THE BARRIER KERBS SHALL BE LOWERED TO THE REQUIRED HEIGHT WITHOUT DISTURBING THE ADJACENT CHANNELS AND ROAD EDGE.

Type E

7. WHERE EXISTING BARRIER KERBS AND CHANNELS ARE PRESENT, THE BARRIER KERBS SHALL BE CAREFULLY REMOVED TO ENSURE THE CHANNELS AND ROAD EDGE REMAIN UNDISTURBED.

WHEELCHAIR, LOADING AND BICYCLE RAMP

FRL: FINISHED ROAD LEVEL
FSL: FINISHED SURFACE LEVEL

CITY OF CAPE TOWN
ISIXEKO SASEKAPA
STAD KAAPSTAD

CITY OF CAPE TOWN
URBAN MOBILITY

TITLE

DROPPED KERB TYPES

PEDESTRIAN, WHEELCHAIR, LOADING & BICYCLE RAMPS

STANDARDS AND GUIDELINES DETAILS

SCALE	PAPER
1:10	A4
DRAWING No.	REV
RD2.2	D

P:\CAD\R&SD\ITI_01 Design\T_1000B Standards\T_1000RS DESIGN_Roads and Stormwater\0002 Drawings_Version4.0\01 RD\RD2.2 – Dropped Kerb Types_RevD.dwg

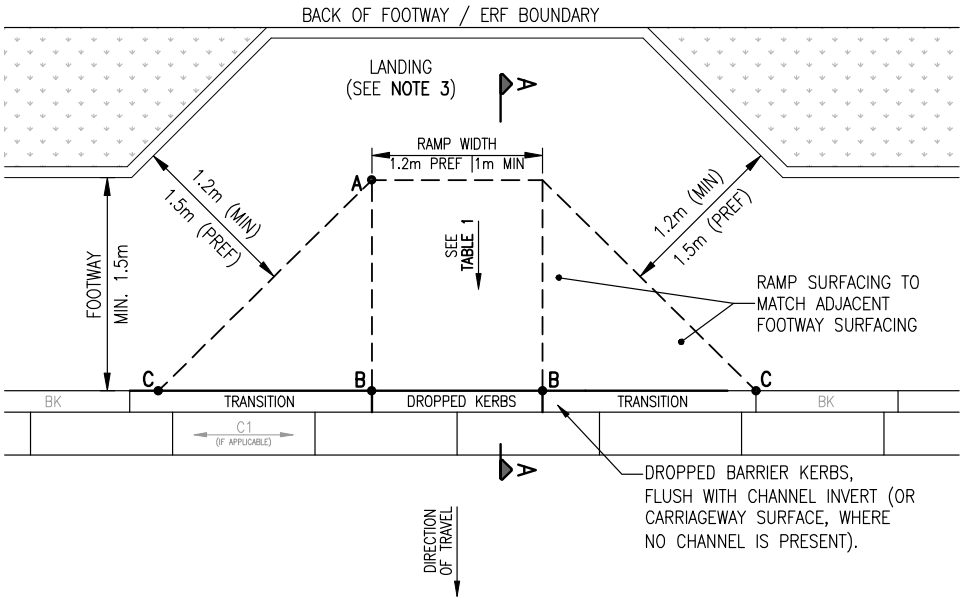

PLAN VIEW
SCALE 1:50

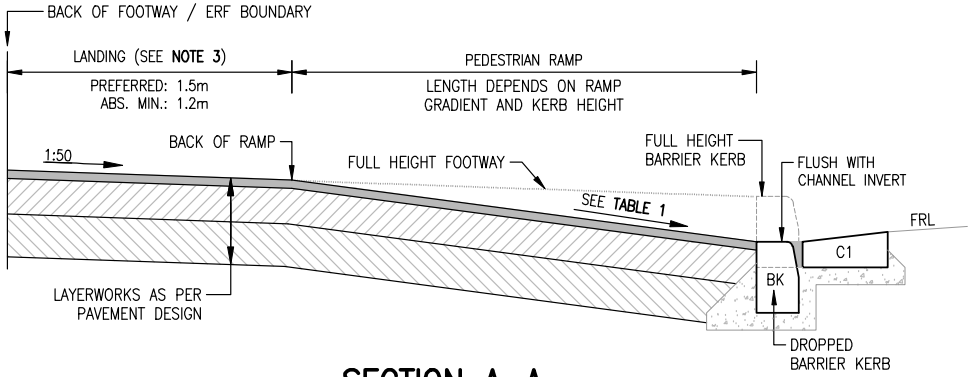

SECTION A–A
SCALE 1:25

TABLE 1 RAMP GRADIENT	
PREFERENCE	GRADIENT
PREFERRED	1:20 (5%)
ACCEPTABLE	1:15 (6.7%)
ABSOLUTE MAXIMUM	1:12 (8.3%)

NOTES:

1. REFER TO **SECTION 5.5 AND 5.6** FOR FURTHER DETAILS ON UNIVERSAL DESIGN AND ACCESS.
2. A MAXIMUM SLOPE OF 1:12 BETWEEN POINTS "B–C" (ALONG THE TRANSITIONS) IS PREFERRED. WHERE THE AFOREMENTIONED SLOPE IS NOT POSSIBLE, THE LENGTH OF THE TRANSITIONS SHALL NEVER BE LESS THAN 1m.
3. WHERE THERE IS INSUFFICIENT SPACE AVAILABLE ON THE VERGE TO PROVIDE A MINIMUM LANDING OF 1.2m, LONGITUDINAL RAMPS SHALL BE CONSTRUCTED. REFER DRAWING **RD3.1B**.
4. REFER TO DRAWING **RD2.2** (TYPE 'C' & 'D') FOR THE DROPPED KERB DETAILS.

NGL: NATURAL GROUND LEVEL
FRL: FINISHED ROAD LEVEL
FSL: FINISHED SURFACE LEVEL

CITY OF CAPE TOWN
ISIXEKO SASEKAPA
STAD KAAPSTAD

CITY OF CAPE TOWN
URBAN MOBILITY

TITLE

MISCELLANEOUS RAMPS
TYPE A: WHEELCHAIR RAMP WITH LANDING
(PREFERRED)

STANDARDS AND GUIDELINES DETAILS

SCALE	PAPER
SHOWN	A4
DRAWING No.	REV
RD3.1A	A

P:\CAD\R&SD\ITI_01 Design\T_1000B Standards\T_1000RS DESIGN_Roads and Stormwater\0002 Drawings_Version4.0\01 RD\RD3.1A – Wheelchair Ramp with Landing_RevA.dwg

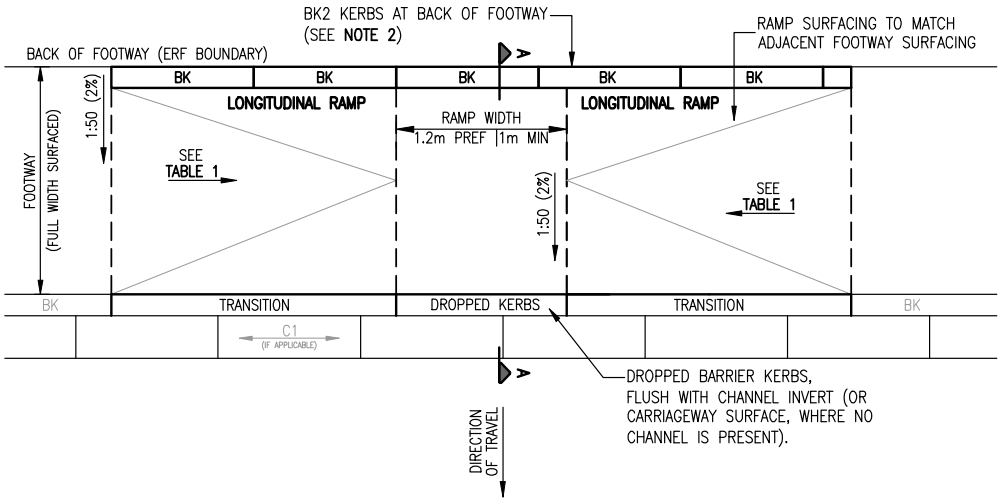

PLAN VIEW
SCALE 1:50

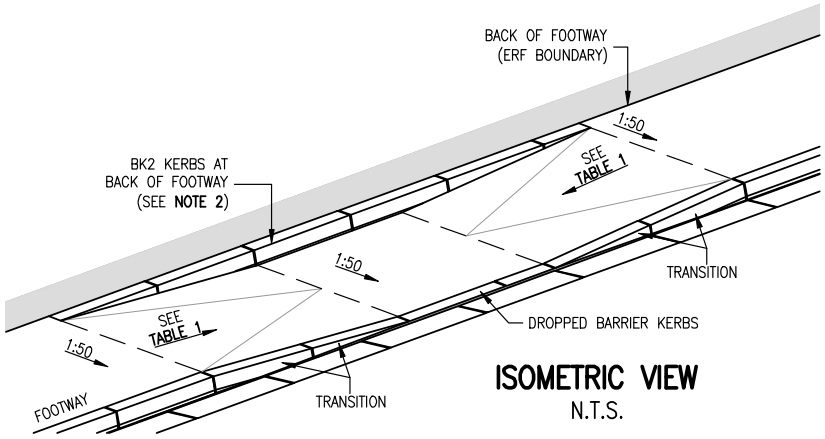

ISOMETRIC VIEW
N.T.S.

TABLE 1 SIDE RAMP GRADIENT	
PREFERENCE	GRADIENT
PREFERRED	1:20 (5%)
ACCEPTABLE	1:15 (6.7%)
ABSOLUTE MAXIMUM	1:12 (8.3%)

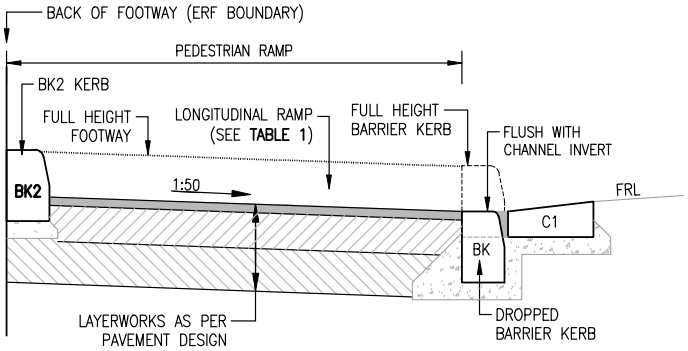

SECTION A–A
SCALE 1:25

NOTES:

1. THIS OPTION IS NOT PREFERRED AND SHOULD BE USED AS A LAST ALTERNATIVE.
2. IF A SOLID BOUNDARY WALL IS PRESENT OR THERE IS NO FLOODING RISK TO THE ADJACENT PROPERTY. THE BARRIER KERBS MAY BE OMITTED.
3. REFER TO **SECTION 5.5 AND 5.6** FOR FURTHER DETAILS ON UNIVERSAL DESIGN AND ACCESS.
4. REFER TO DRAWING **RD2.2** (TYPE 'C' & 'D') FOR THE DROPPED KERB DETAILS.

NGL: NATURAL GROUND LEVEL
FRL: FINISHED ROAD LEVEL
FSL: FINISHED SURFACE LEVEL

CITY OF CAPE TOWN
ISIXEKO SASEKAPA
STAD KAAPSTAD

CITY OF CAPE TOWN
URBAN MOBILITY

TITLE

MISCELLANEOUS RAMPS
TYPE B: WHEELCHAIR RAMP FOR NARROW FOOTWAYS/VERGES
(NOT PREFERRED)

STANDARDS AND GUIDELINES DETAILS

SCALE	PAPER
SHOWN	A4
DRAWING No.	REV
RD3.1B	A

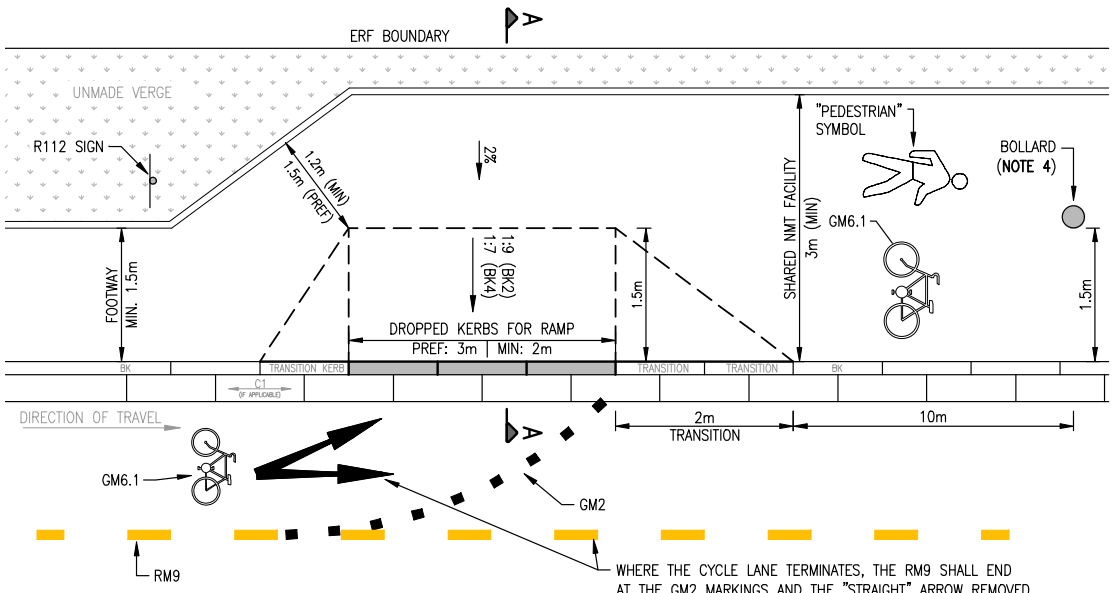

PLAN VIEW: ON RAMP

NOTES:

1. THIS OPTION MAY BE USED ON THE LOW OR HIGH SIDE OF THE CARRIAGEWAY.
2. REFER TO DRAWING **RD2.2** FOR THE DROPPED KERB DETAILS (**TYPE 'C' & 'D'**).
3. ROAD MARKING SHALL CONFORM TO SADC RTSM VOL1.
4. WHERE THERE IS A POSSIBILITY OF ILLEGAL VEHICULAR BEHAVIOR OCCURRING ON THE SHARED NMT FACILITY, A CONCRETE BOLLARD MAY BE PLACED 10m DOWNSTREAM OF THE BICYCLE RAMP. BOLLARD TO BE PAINTED AS PER DRAWING GE1 AND POSITIONED TO ALLOW 1.5m CLEAR WIDTH BETWEEN BACK OF KERB AND BOLLARD EDGE.

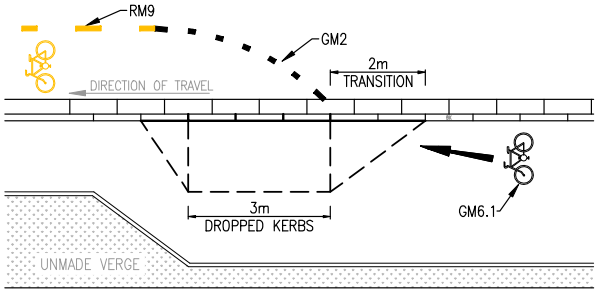

PLAN VIEW: OFF RAMP
(ROAD MARKINGS ONLY)

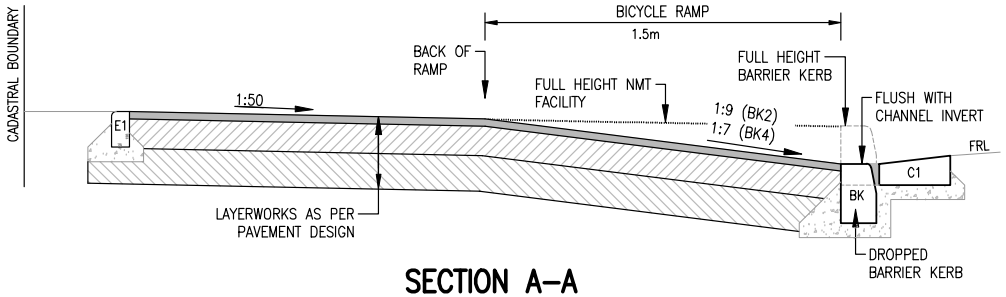

SECTION A–A

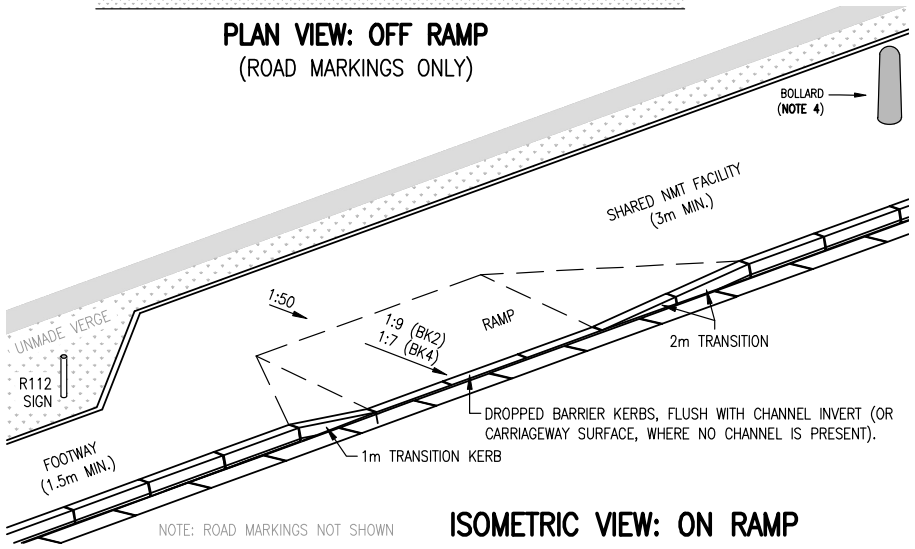

ISOMETRIC VIEW: ON RAMP

CITY OF CAPE TOWN
ISIXEKO SASEKAPA
STAD KAAPSTAD

CITY OF CAPE TOWN
URBAN MOBILITY

TITLE

MISCELLANEOUS RAMPS
TYPE A: BICYCLE RAMP

STANDARDS AND GUIDELINES DETAILS

SCALE	PAPER
N.T.S.	A4
DRAWING No.	REV
RD3.2A	A

P:\CAD\R&SD\ITI_01 Design\T_1000B Standards\T_1000RS DESIGN_Roads and Stormwater\0002 Drawings_Version4.0\01 RD\RD3.2A – Bicycle Ramp_RevA.dwg

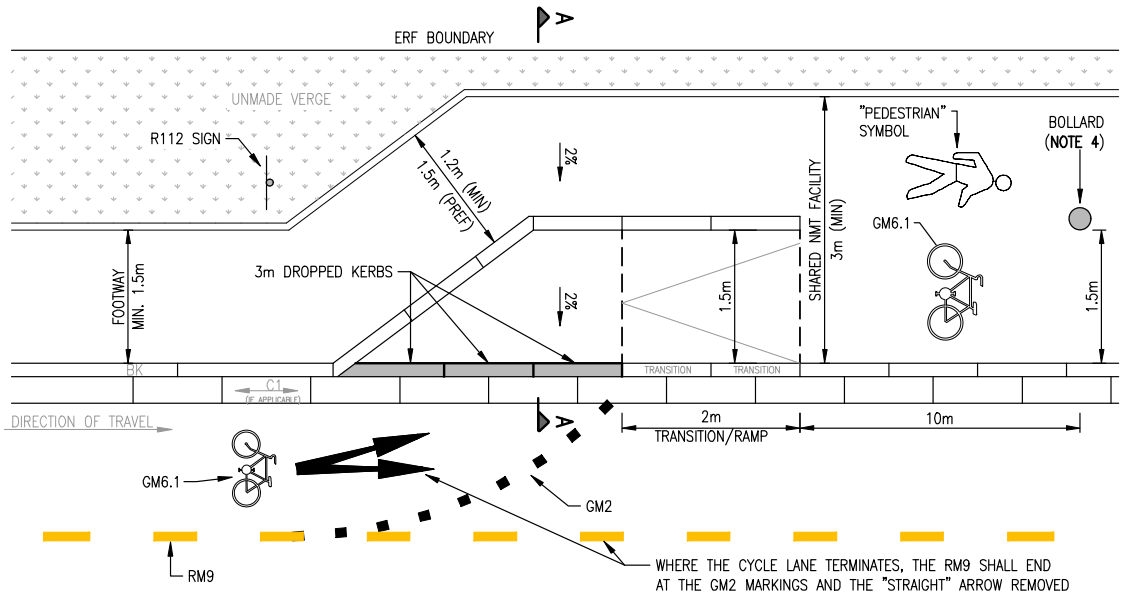

PLAN VIEW: ON RAMP

NOTES:

1. THIS OPTION MAY BE USED ON THE LOW OR HIGH SIDE OF THE CARRIAGEWAY.
2. REFER TO DRAWING **RD2.2** FOR THE DROPPED KERB DETAILS (**TYPE 'C' & 'D'**).
3. ROAD MARKING SHALL CONFORM TO SADC RTSM VOL1.
4. WHERE THERE IS A POSSIBILITY OF ILLEGAL VEHICULAR BEHAVIOR OCCURRING ON THE SHARED NMT FACILITY, A CONCRETE BOLLARD MAY BE PLACED 10m DOWNSTREAM OF THE BICYCLE RAMP. BOLLARD TO BE PAINTED AS PER DRAWING GE1 AND POSITIONED TO ALLOW 1.5m CLEAR WIDTH BETWEEN BACK OF KERB AND BOLLARD EDGE.

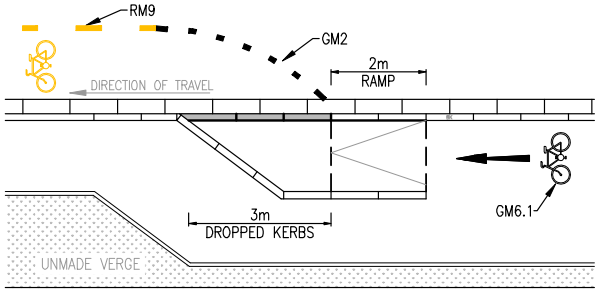

PLAN VIEW: OFF RAMP
(ROAD MARKINGS ONLY)

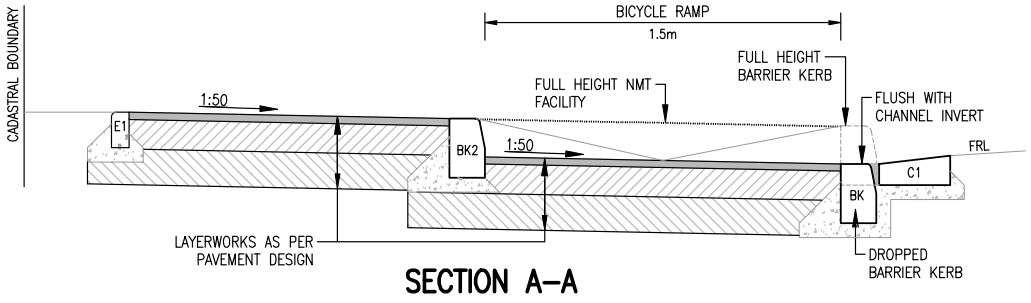

SECTION A–A

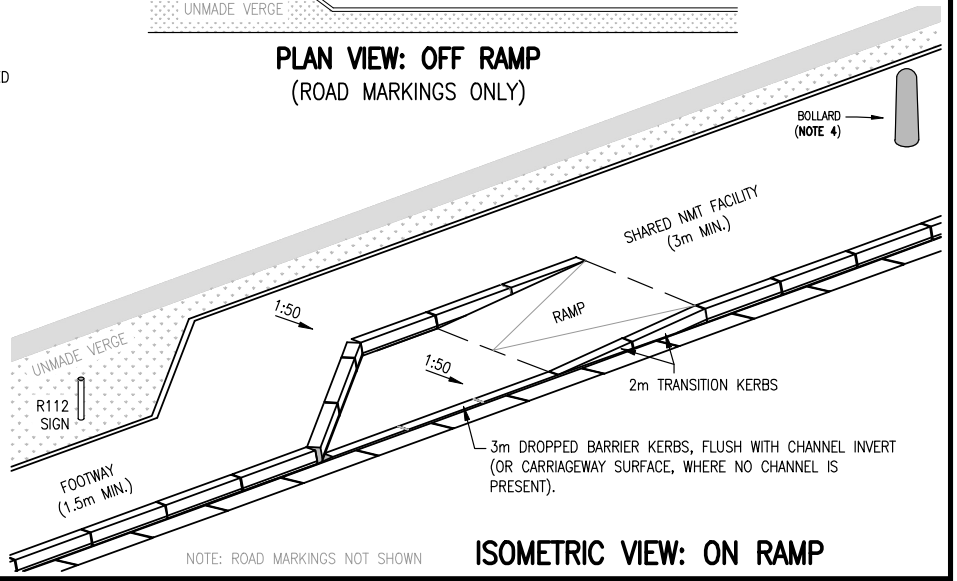

ISOMETRIC VIEW: ON RAMP

CITY OF CAPE TOWN
ISIXEKO SASEKAPA
STAD KAAPSTAD

CITY OF CAPE TOWN
URBAN MOBILITY

TITLE

MISCELLANEOUS RAMPS
TYPE B: BICYCLE RAMP

STANDARDS AND GUIDELINES DETAILS

SCALE	PAPER
N.T.S.	A4
DRAWING No.	REV
RD3.2B	A

P:\CAD\R&SD\ITI_01 Design\T_1000B Standards\T_1000RS DESIGN_Roads and Stormwater\0002 Drawings_Version4.0\01 RD\RD3.2B – Bicycle Ramp_RevA.dwg

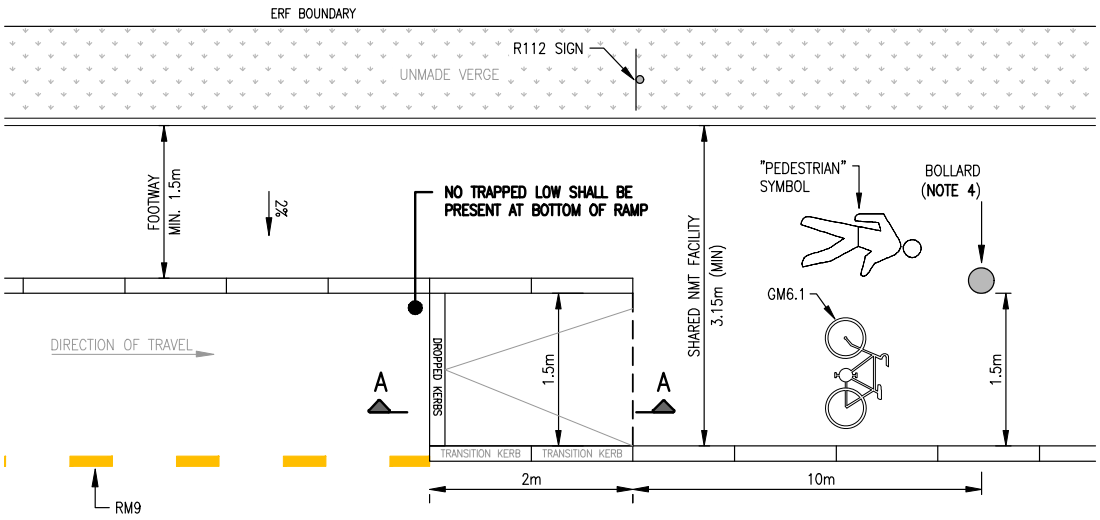

PLAN VIEW: ON RAMP

NOTES:

1. **STORMWATER DRAINAGE TO CONSIDERED. THIS OPTION SHALL ONLY BE USED WHERE NO TRAPPED LOW POINT IS CREATED AT THE BOTTOM OF THE RAMP.**
2. REFER TO DRAWING **RD2.2** FOR THE DROPPED KERB DETAILS (**TYPE 'C' & 'D'**).
3. ROAD MARKING SHALL CONFORM TO SADC RTSM VOL1.
4. WHERE THERE IS A POSSIBILITY OF ILLEGAL VEHICULAR BEHAVIOR OCCURRING ON THE SHARED NMT FACILITY, A CONCRETE BOLLARD MAY BE PLACED 10m DOWNSTREAM OF THE BICYCLE RAMP. BOLLARD TO BE PAINTED AS PER DRAWING GE1 AND POSITIONED TO ALLOW 1.5m CLEAR WIDTH BETWEEN BACK OF KERB AND BOLLARD EDGE.

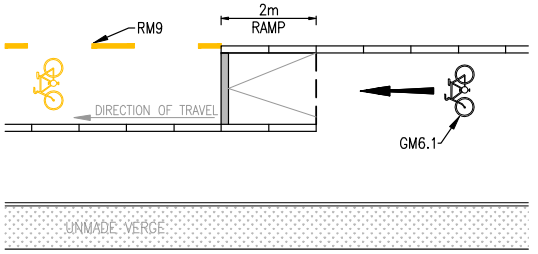

PLAN VIEW: OFF RAMP
(ROAD MARKINGS ONLY)

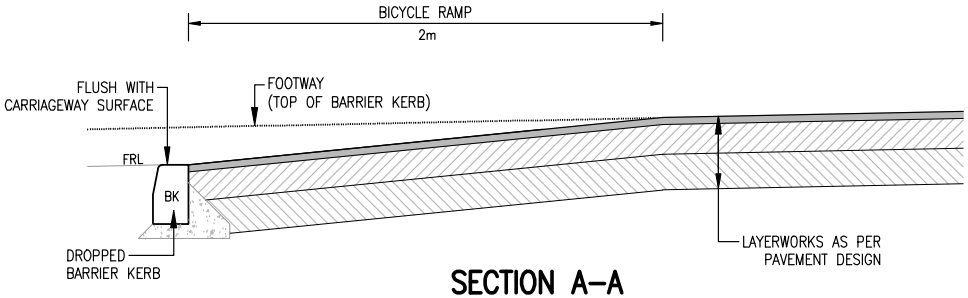

SECTION A–A

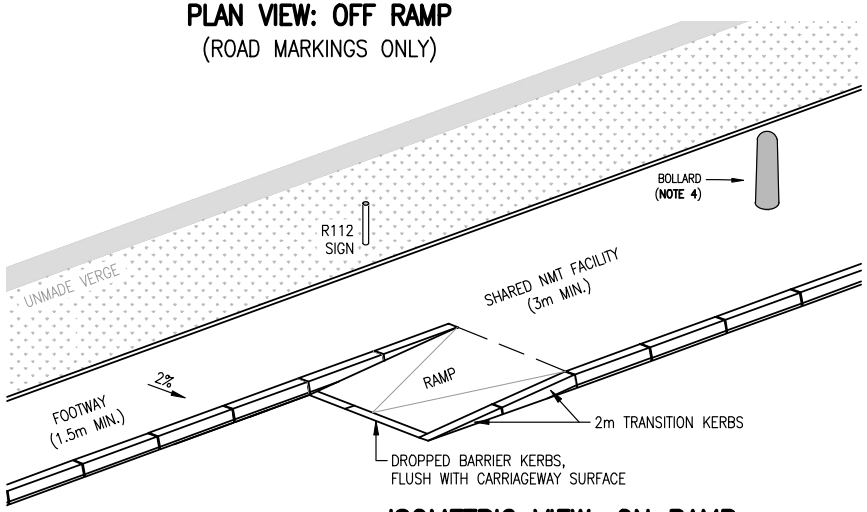

NOTE: ROAD MARKINGS NOT SHOWN

ISOMETRIC VIEW: ON RAMP

CITY OF CAPE TOWN
ISIXEKO SASEKAPA
STAD KAAPSTAD

CITY OF CAPE TOWN
URBAN MOBILITY

TITLE

MISCELLANEOUS RAMPS
TYPE C: BICYCLE RAMP

STANDARDS AND GUIDELINES DETAILS

SCALE	PAPER
N.T.S.	A4
DRAWING No.	REV
RD3.2C	A

P:\CAD\R&SD\ITI_01 Design\T_1000B Standards\T_1000RS DESIGN_Roads and Stormwater\0002 Drawings_Version4.0\01 RD\RD3.2C – Bicycle Ramp_RevA.dwg

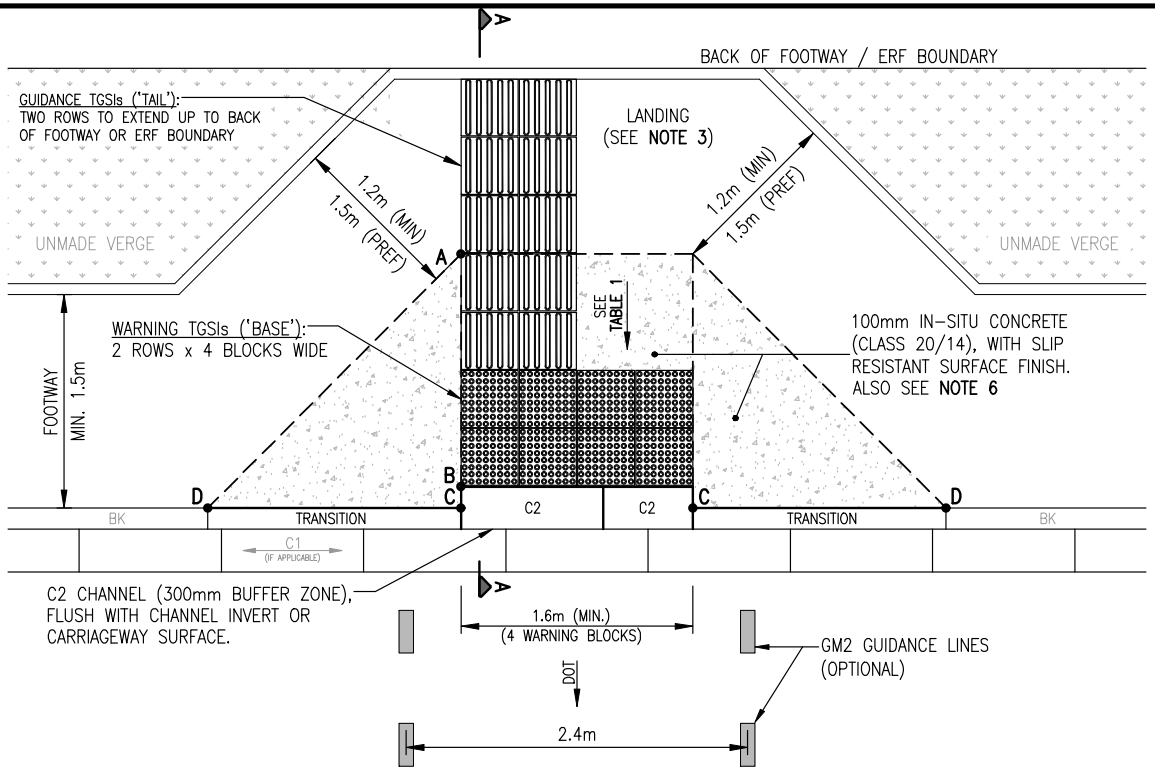

PLAN VIEW
SCALE 1:50

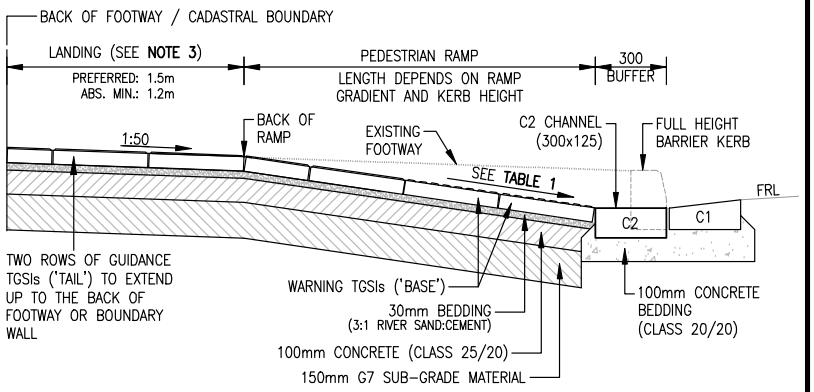

SECTION A–A
N.T.S.

TABLE 1 RAMP GRADIENT	
PREFERENCE	GRADIENT
PREFERRED	1:20 (5%)
ACCEPTABLE	1:15 (6.7%)
ABSOLUTE MAXIMUM	1:12 (8.3%)

NOTES:

1. REFER TO SECTION **5.6** AND **5.7** FOR FURTHER DETAILS ON PEDESTRIAN RAMPS AND TGSIs.
2. A MAXIMUM SLOPE OF 1:12 BETWEEN POINTS "C–D" (ALONG THE TRANSITIONS) IS PREFERRED. WHERE THE AFOREMENTIONED SLOPE IS NOT POSSIBLE, THE LENGTH OF THE TRANSITIONS SHALL NEVER BE LESS THAN 1m.
3. WHERE THERE IS INSUFFICIENT SPACE AVAILABLE ON THE VERGE TO PROVIDE A MINIMUM LANDING OF 1.2m, LONGITUDINAL RAMPS SHALL BE CONSTRUCTED. AS A FIRST ALTERNATIVE, DESIGNERS SHALL APPLY THE "COMBINATION DROP" AS PER DRAWING **RD4.3**. WHERE THIS OPTION IS NOT POSSIBLE, THE "FULL DROP" OPTION SHALL BE APPLIED AS PER DRAWING **RD4.4**.
4. TGSIs TO BE PLACED PARALLEL WITH THE DIRECTION OF TRAVEL OF THE PEDESTRIAN CROSSING.
5. REFER TO DRAWING **RD2.2** FOR THE DROPPED KERB DETAILS (TYPE 'E' OR 'F').
6. ALTERNATIVE SURFACE TREATMENTS MAY BE APPLIED, SUBJECT TO APPROVAL AUTHORITY.

FRL: FINISHED ROAD LEVEL
DOT: DIRECTION OF TRAVEL

CITY OF CAPE TOWN
ISIXEKO SASEKAPA
STAD KAAPSTAD

CITY OF CAPE TOWN
URBAN MOBILITY

TITLE

PEDESTRIAN RAMPS: UNCONTROLLED PEDESTRIAN CROSSINGS
WIDE VERGE - SIDEWALK WITH UNMADE VERGE
(PREFERRED)

STANDARDS AND GUIDELINES DETAILS

SCALE	PAPER
SHOWN	A4
DRAWING No.	REV
RD4.1	C

P:\CAD\R&SD\ITI_01 Design\T_1000B Standards\T_1000RS DESIGN_Roads and Stormwater\0002 Drawings_Version4.0\01 RD\RD4.1 – Pedestrian Ramps – Uncontrolled_RevC.dwg

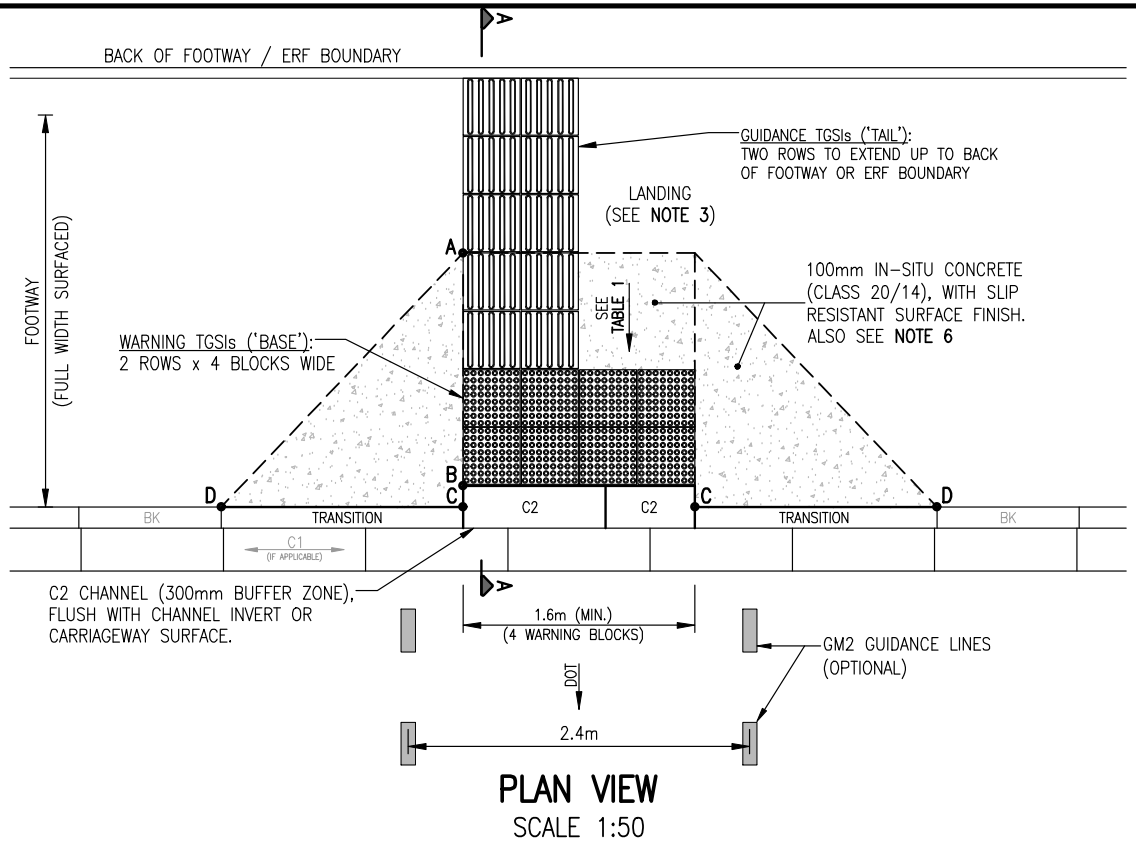

PLAN VIEW
SCALE 1:50

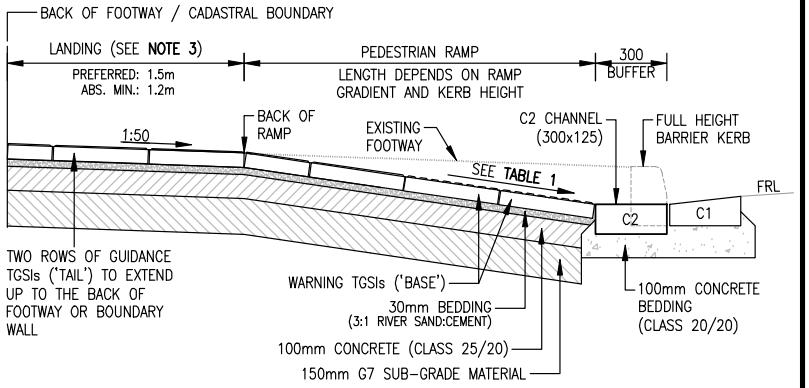

SECTION A–A
N.T.S.

TABLE 1
RAMP GRADIENT

PREFERENCE	GRADIENT
PREFERRED	1:20 (5%)
ACCEPTABLE	1:15 (6.7%)
ABSOLUTE MAXIMUM	1:12 (8.3%)

NOTES:

1. REFER TO SECTION **5.6** AND **5.7** FOR FURTHER DETAILS ON PEDESTRIAN RAMPS AND TGSIs.
2. A MAXIMUM SLOPE OF 1:12 BETWEEN POINTS "C–D" (ALONG THE TRANSITIONS) IS PREFERRED. WHERE THE AFOREMENTIONED SLOPE IS NOT POSSIBLE, THE LENGTH OF THE TRANSITIONS SHALL NEVER BE LESS THAN 1m.
3. WHERE THERE IS INSUFFICIENT SPACE AVAILABLE ON THE VERGE TO PROVIDE A MINIMUM LANDING OF 1.2m, LONGITUDINAL RAMPS SHALL BE CONSTRUCTED. AS A FIRST ALTERNATIVE, DESIGNERS SHALL APPLY THE "COMBINATION DROP" AS PER DRAWING **RD4.3**. WHERE THIS OPTION IS NOT POSSIBLE, THE "FULL DROP" OPTION SHALL BE APPLIED AS PER DRAWING **RD4.4**.
4. TGSIs TO BE PLACED PARALLEL WITH THE DIRECTION OF TRAVEL OF THE PEDESTRIAN CROSSING.
5. REFER TO DRAWING **RD2.2** FOR THE DROPPED KERB DETAILS (TYPE 'E' OR 'F').
6. ALTERNATIVE SURFACE TREATMENTS MAY BE APPLIED, SUBJECT TO APPROVAL AUTHORITY.

FRL: FINISHED ROAD LEVEL
DOT: DIRECTION OF TRAVEL

CITY OF CAPE TOWN
ISIXEKO SASEKAPA
STAD KAAPSTAD

CITY OF CAPE TOWN
URBAN MOBILITY

TITLE

PEDESTRIAN RAMPS: UNCONTROLLED PEDESTRIAN CROSSINGS WIDE VERGE - FULL VERGE SURFACED

STANDARDS AND GUIDELINES DETAILS

SCALE	PAPER
SHOWN	A4
DRAWING No.	REV
RD4.2	C

P:\CAD\R&SD\ITI_01 Design\T_1000B Standards\T_1000RS DESIGN_Roads and Stormwater\0002 Drawings_Version4.0\01 RD\RD4.2 – Pedestrian Ramps – Uncontrolled_RevC.dwg

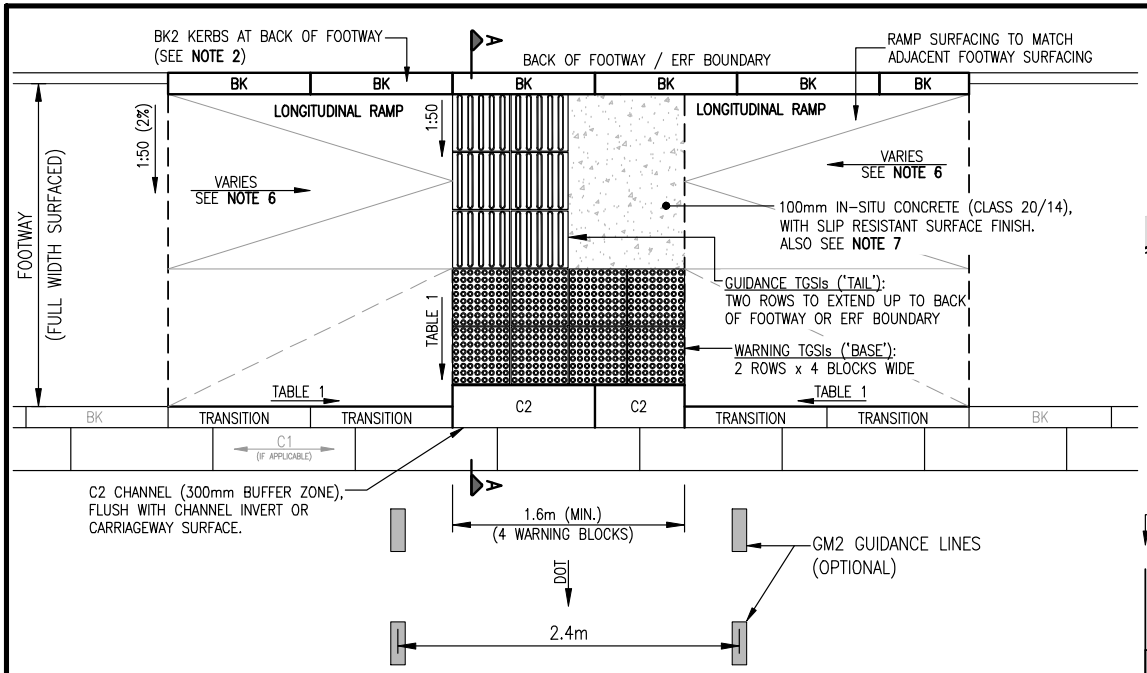

PLAN VIEW
SCALE 1:50

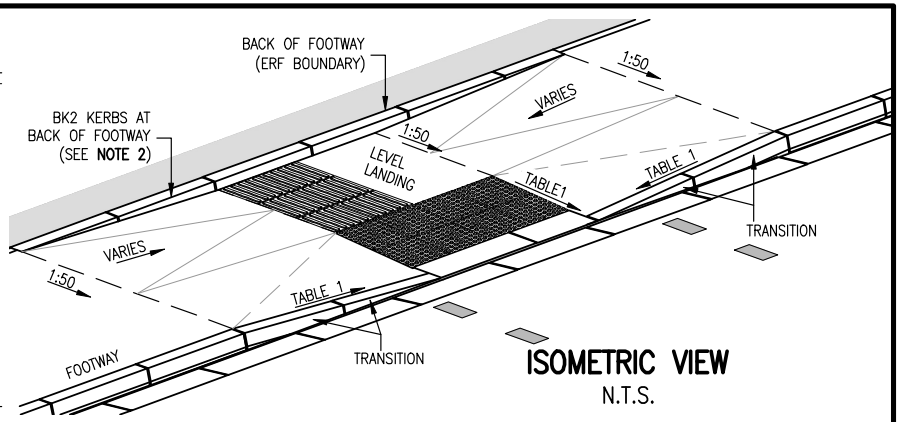

ISOMETRIC VIEW
N.T.S.

TABLE 1 RAMP GRADIENT	
PREFERENCE	GRADIENT
PREFERRED	1:20 (5%)
ACCEPTABLE	1:15 (6.7%)
ABSOLUTE MAXIMUM	1:12 (8.3%)

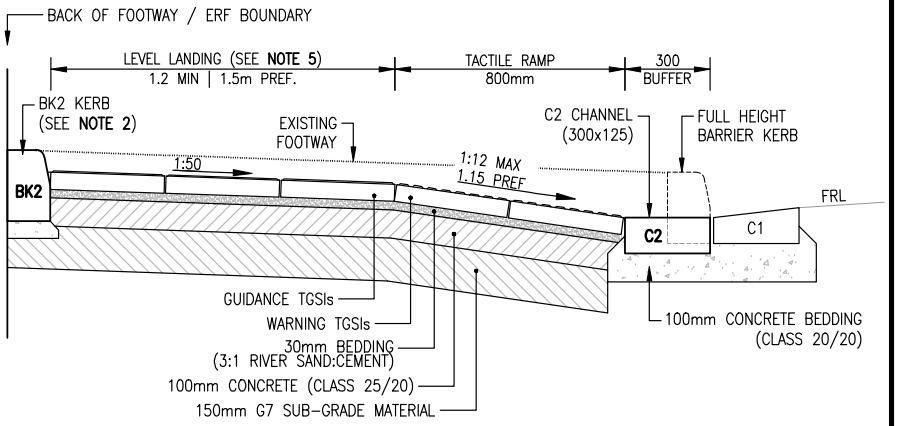

SECTION A–A
SCALE 1:25

NOTES:

1. REFER TO SECTION **5.6** AND **5.7** FOR FURTHER DETAILS ON PEDESTRIAN RAMPS AND TGSIs.
2. IF A SOLID BOUNDARY WALL IS PRESENT OR THERE IS NO FLOODING RISK TO THE ADJACENT PRIVATE PROPERTY, THE BARRIER KERBS MAY BE OMITTED.
3. TGSIs TO BE PLACED PARALLEL WITH THE DIRECTION OF TRAVEL OF THE PEDESTRIAN CROSSING.
4. REFER TO DRAWING **RD2.2** FOR THE DROPPED KERB DETAILS (TYPE 'E' OR 'F').
5. WHERE A MINIMUM LANDING OF 1.2m IS NOT POSSIBLE, THE "FULL DROP" OPTION SHALL BE APPLIED AS PER DRAWING **RD4.4**.
6. GRADIENT DEPENDENT ON KERB HEIGHT AND TRANSITION LENGTH, BUT SHALL NEVER EXCEED 1:12.
7. ALTERNATIVE SURFACE TREATMENTS MAY BE APPLIED, SUBJECT TO APPROVAL AUTHORITY.

FRL: FINISHED ROAD LEVEL
DOT: DIRECTION OF TRAVEL

CITY OF CAPE TOWN
ISIXEKO SASEKAPA
STAD KAAPSTAD

CITY OF CAPE TOWN
URBAN MOBILITY

TITLE

PEDESTRIAN RAMPS: UNCONTROLLED PEDESTRIAN CROSSINGS NARROW VERGE (SPACE CONSTRAINT) COMBINATION DROP (PARTIAL DROP) (NOT IDEAL, BUT ACCEPTABLE)

STANDARDS AND GUIDELINES DETAILS

SCALE	PAPER
SHOWN	A4
DRAWING No.	REV
RD4.3	C

P:\CAD\R&SD\ITI_01 Design\T_1000B Standards\T_1000RS DESIGN_Roads and Stormwater\0002 Drawings_Version4.0\01 RD\RD4.3 – Pedestrian Ramps – Uncontrolled_RevC.dwg

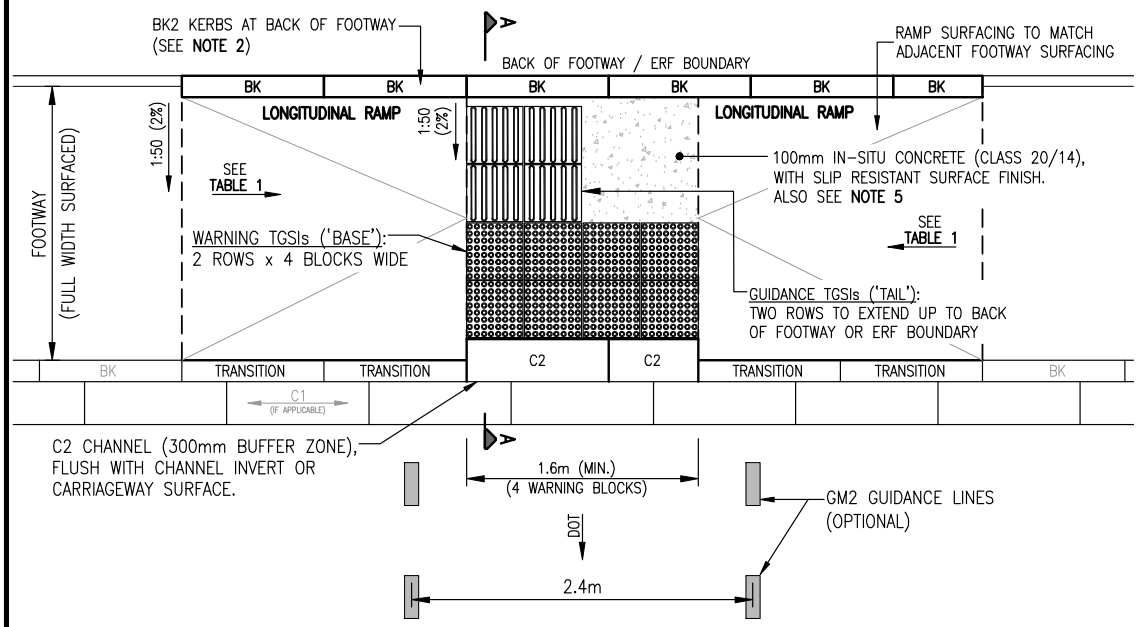

PLAN VIEW
SCALE 1:50

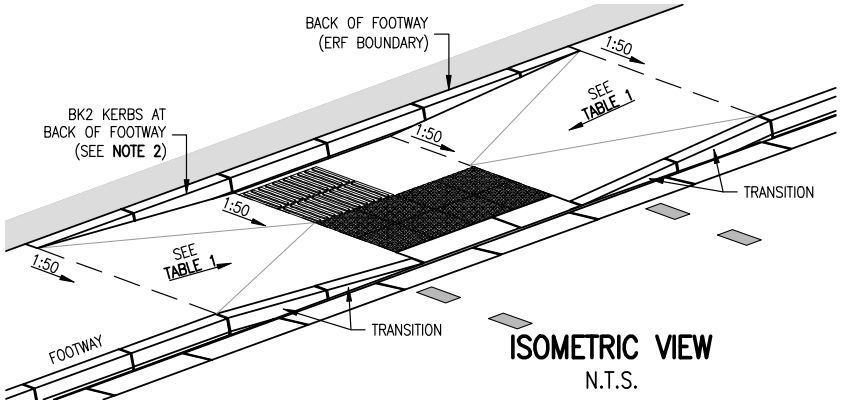

ISOMETRIC VIEW
N.T.S.

TABLE 1 RAMP GRADIENT	
PREFERENCE	GRADIENT
PREFERRED	1:20 (5%)
ACCEPTABLE	1:15 (6.7%)
ABSOLUTE MAXIMUM	1:12 (8.3%)

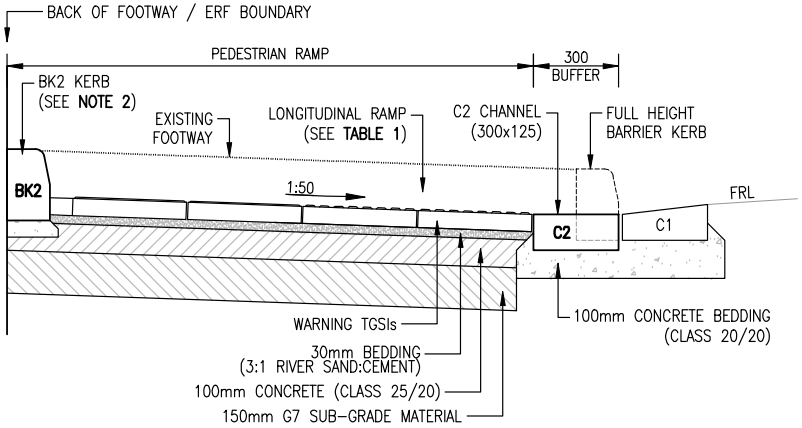

SECTION A–A
SCALE 1:25

NOTES:

1. REFER TO SECTION **5.6** AND **5.7** FOR FURTHER DETAILS ON PEDESTRIAN RAMPS AND TGSIs.
2. IF A SOLID BOUNDARY WALL IS PRESENT OR THERE IS NO FLOODING RISK TO THE ADJACENT PRIVATE PROPERTY, THE BARRIER KERBS MAY BE OMITTED.
3. TGSIs TO BE PLACED PARALLEL WITH THE DIRECTION OF TRAVEL OF THE PEDESTRIAN CROSSING.
4. REFER TO DRAWING **RD2.2** FOR THE DROPPED KERB DETAILS (TYPE 'E' OR 'F').
5. ALTERNATIVE SURFACE TREATMENTS MAY BE APPLIED, SUBJECT TO APPROVAL AUTHORITY.
6. THIS OPTION IS NOT PREFERRED AND SHOULD BE USED AS A LAST ALTERNATIVE.

FRL: FINISHED ROAD LEVEL
DOT: DIRECTION OF TRAVEL

CITY OF CAPE TOWN
ISIXEKO SASEKAPA
STAD KAAPSTAD

CITY OF CAPE TOWN
URBAN MOBILITY

TITLE

PEDESTRIAN RAMPS: UNCONTROLLED PEDESTRIAN CROSSINGS
NARROW VERGE (SPACE CONSTRAINT)
FULL DROP (ACCEPTABLE, BUT NOT PREFERRED)

STANDARDS AND GUIDELINES DETAILS

SCALE	PAPER
SHOWN	A4
DRAWING No.	REV
RD4.4	C

P:\CAD\R&SD\ITI_01 Design\T_1000B Standards\T_1000RS DESIGN_Roads and Stormwater\0002 Drawings_Version4.0\01 RD\RD4.4 – Pedestrian Ramps – Uncontrolled_RevC.dwg

TABLE 1 RAMP GRADIENT	
PREFERENCE	GRADIENT
PREFERRED	1:20 (5%)
ACCEPTABLE	1:15 (6.7%)
ABSOLUTE MAXIMUM	1:12 (8.3%)

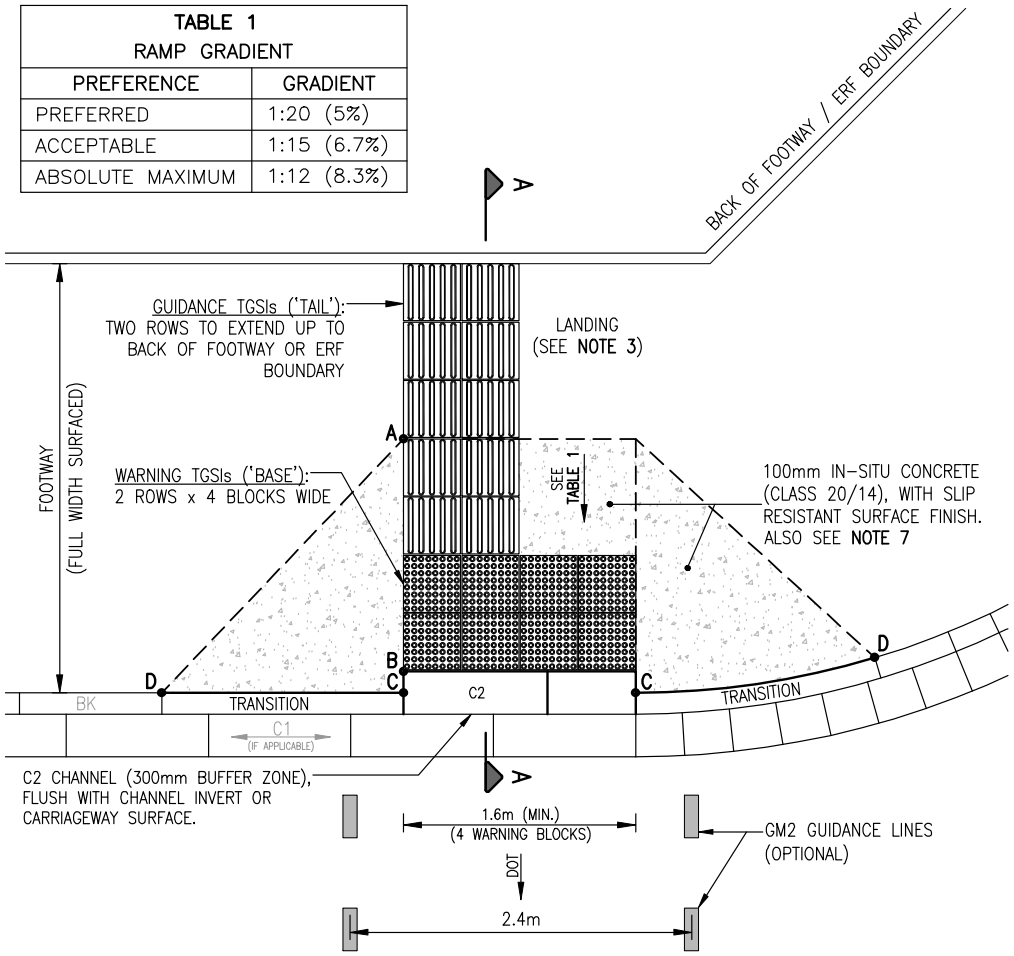

PLAN VIEW
1:50

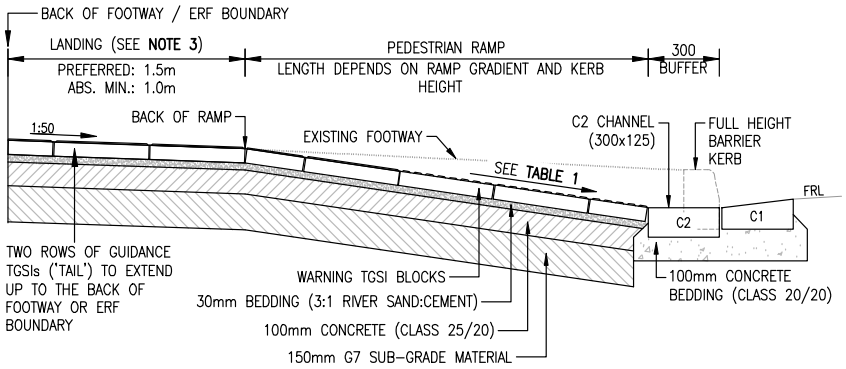

SECTION A–A
N.T.S.

NOTES:

1. REFER TO SECTION **5.6** AND **5.7** FOR FURTHER DETAILS ON PEDESTRIAN RAMPS AND TGSIs.
2. A MAXIMUM SLOPE OF 1:12 BETWEEN POINTS "C–D" (ALONG THE TRANSITIONS) IS PREFERRED. WHERE THE AFOREMENTIONED SLOPE IS NOT POSSIBLE, THE LENGTH OF THE TRANSITIONS SHALL NEVER BE LESS THAN 1m.
3. WHERE THERE IS INSUFFICIENT SPACE AVAILABLE ON THE VERGE TO PROVIDE A MINIMUM LANDING OF 1.2m, LONGITUDINAL RAMPS SHALL BE CONSTRUCTED. AS A FIRST ALTERNATIVE, DESIGNERS SHALL APPLY THE "COMBINATION DROP" AS PER DRAWING **RD4.3**. WHERE THIS OPTION IS NOT POSSIBLE, THE "FULL DROP" OPTION SHALL BE APPLIED AS PER DRAWING **RD4.4**.
4. TGSIs TO BE PLACED PARALLEL WITH THE DIRECTION OF TRAVEL OF THE PEDESTRIAN CROSSING.
5. REFER TO DRAWING **RD2.2** FOR THE DROPPED KERB DETAILS (TYPE 'E' OR 'F').
6. STOP LINES TO BE SET BACK 1.5m FROM THE PEDESTRIAN CROSSING PATHWAY.
7. ALTERNATIVE SURFACE TREATMENTS MAY BE APPLIED, SUBJECT TO APPROVAL AUTHORITY.

FRL: FINISHED ROAD LEVEL
DOT: DIRECTION OF TRAVEL

CITY OF CAPE TOWN
ISIXEKO SASEKAPA
STAD KAAPSTAD

CITY OF CAPE TOWN
URBAN MOBILITY

TITLE

PEDESTRIAN RAMPS: UNCONTROLLED PEDESTRIAN CROSSINGS ON STRAIGHT EDGE AT INTERSECTION (PREFERRED)

STANDARDS AND GUIDELINES DETAILS

SCALE	PAPER
SHOWN	A4
DRAWING No.	REV
RD4.5	C

P:\CAD\R&SD\ITI_01 Design\T_1000B Standards\T_1000RS DESIGN_Roads and Stormwater\0002 Drawings_Version4.0\01 RD\RD4.5 – Pedestrian Ramp – Uncontrolleds_RevC.dwg

TABLE 1 RAMP GRADIENT (A–B)	
PREFERENCE	GRADIENT
PREFERRED	1:20 (5%)
ACCEPTABLE	1:15 (6.7%)
ABSOLUTE MAXIMUM	1:12 (8.3%)

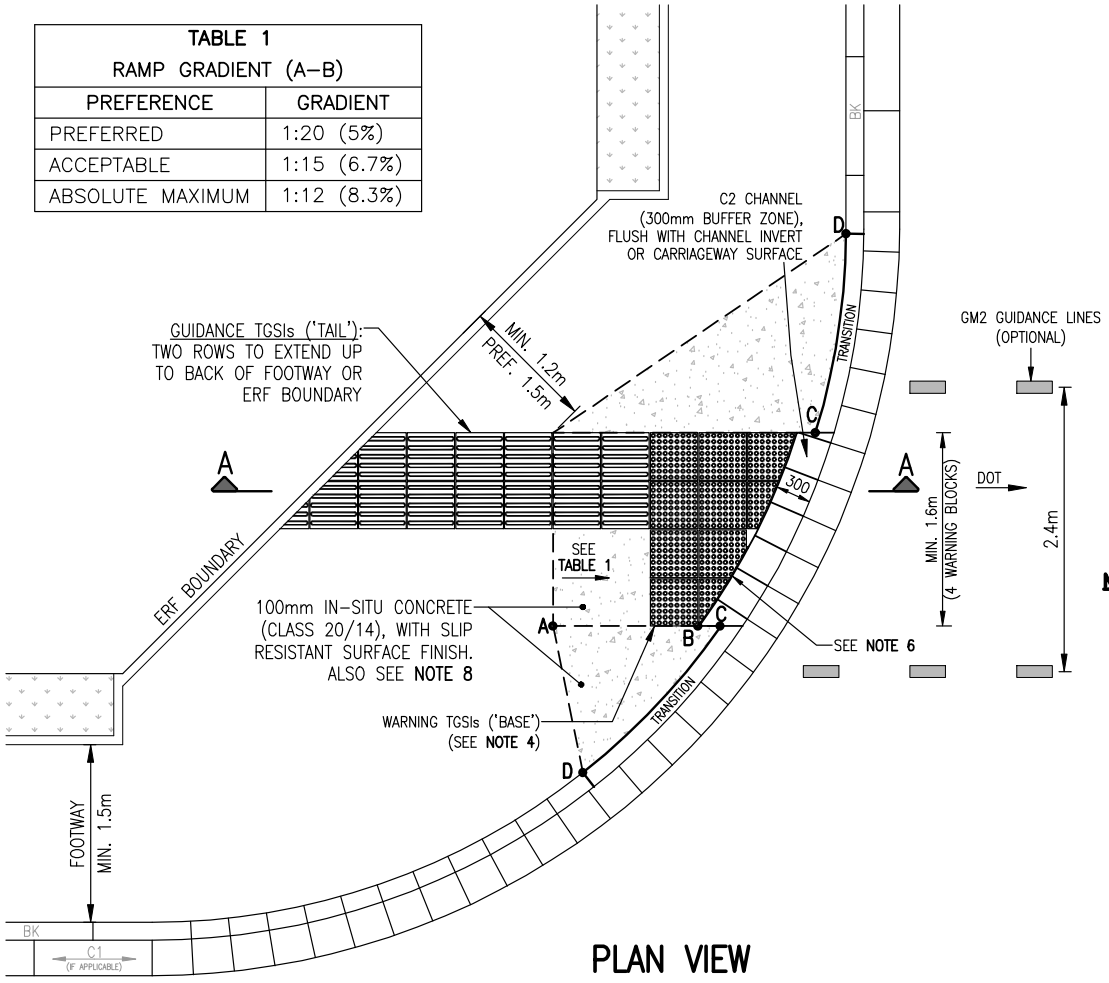

PLAN VIEW
N.T.S

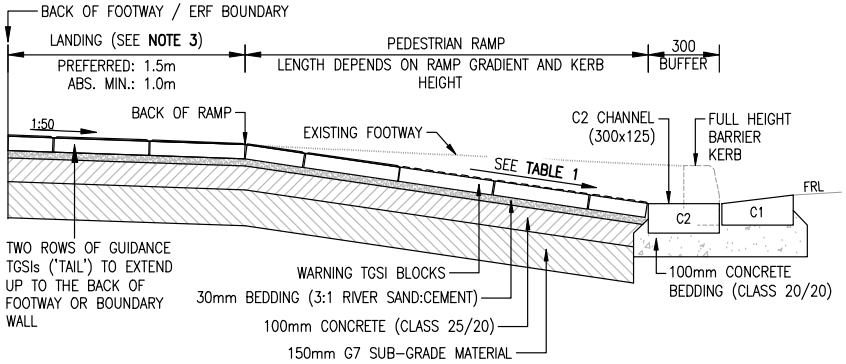

SECTION A–A
N.T.S.

NOTES:

1. REFER TO SECTION **5.6** AND **5.7** FOR FURTHER DETAILS ON PEDESTRIAN RAMPS AND TGSIs
2. A MAXIMUM SLOPE OF 1:12 BETWEEN POINTS "C–D" (ALONG THE TRANSITIONS) IS PREFERRED. WHERE THE AFOREMENTIONED SLOPE IS NOT POSSIBLE, THE LENGTH OF THE TRANSITIONS SHALL NEVER BE LESS THAN 1m.
3. WHERE THERE IS INSUFFICIENT SPACE AVAILABLE ON THE VERGE TO PROVIDE A MINIMUM LANDING OF 1.2m, LONGITUDINAL RAMPS SHALL BE CONSTRUCTED. AS A FIRST ALTERNATIVE, DESIGNERS SHALL APPLY THE "COMBINATION DROP" AS PER DRAWING **RD4.3**. WHERE THIS OPTION IS NOT POSSIBLE, THE "FULL DROP" OPTION SHALL BE APPLIED AS PER DRAWING **RD4.4**.
4. MAXIMUM DISTORTION OF WARNING TGSIs (ALSO REFER TO SECTION **5.7.4**):
   - LONG SIDE: 3 BLOCKS
   - SHORT SIDE: 1 BLOCK
4. TGSIs TO BE PLACED PARALLEL WITH THE DIRECTION OF TRAVEL OF THE PEDESTRIAN CROSSING.
5. ONLY MECHANICAL CUTTING OF TGSIs ARE PERMITTED.
6. REFER TO DRAWING **RD2.2** FOR THE DROPPED KERB DETAILS (TYPE 'E' OR 'F').
7. STOP LINES TO BE SET BACK 1.5m FROM THE PEDESTRIAN CROSSING PATHWAY.
8. ALTERNATIVE SURFACE TREATMENTS MAY BE APPLIED, SUBJECT TO APPROVAL AUTHORITY.

FRL: FINISHED ROAD LEVEL
DOT: DIRECTION OF TRAVEL

CITY OF CAPE TOWN
ISIXEKO SASEKAPA
STAD KAAPSTAD

CITY OF CAPE TOWN
URBAN MOBILITY

TITLE

PEDESTRIAN RAMPS: UNCONTROLLED PEDESTRIAN CROSSINGS
OBLIQUE RAMP (SINGLE DIRECTION) (NOT PREFERRED)

STANDARDS AND GUIDELINES DETAILS

SCALE	PAPER
SHOWN	A4
DRAWING No.	REV
RD4.6	C

P:\CAD\R&SD\ITI_01 Design\T_1000B Standards\T_1000RS DESIGN_Roads and Stormwater\0002 Drawings_Version4.0\01 RD\RD4.6 – Pedestrian Ramps – Uncontrolled_RevC.dwg

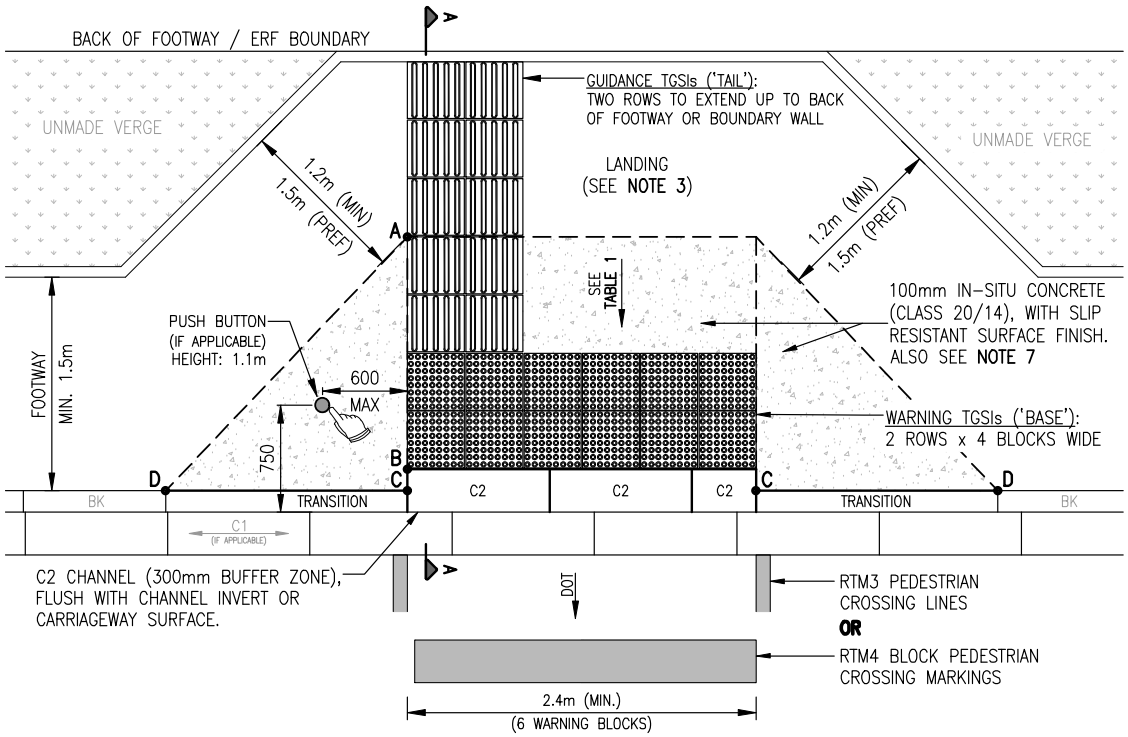

PLAN VIEW
SCALE 1:50

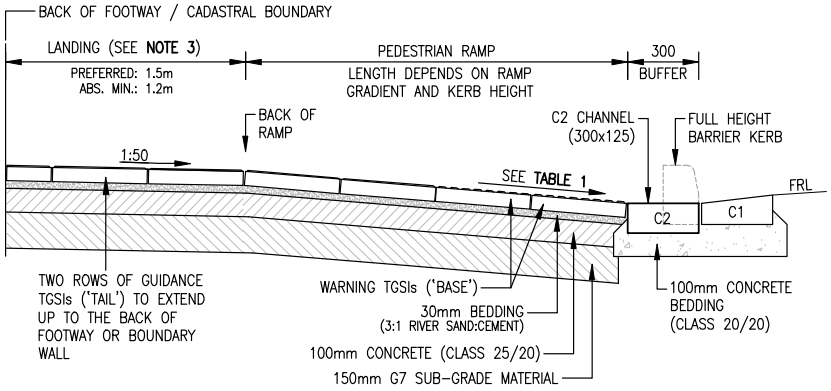

SECTION A–A
N.T.S.

TABLE 1
RAMP GRADIENT

PREFERENCE	GRADIENT
PREFERRED	1:20 (5%)
ACCEPTABLE	1:15 (6.7%)
ABSOLUTE MAXIMUM	1:12 (8.3%)

NOTES:

1. REFER TO SECTION **5.6** AND **5.7** FOR FURTHER DETAILS ON PEDESTRIAN RAMPS AND TGSIs.
2. A MAXIMUM SLOPE OF 1:12 BETWEEN POINTS "C–D" (ALONG THE TRANSITIONS) IS PREFERRED. WHERE THE AFOREMENTIONED SLOPE IS NOT POSSIBLE, THE LENGTH OF THE TRANSITIONS SHALL NEVER BE LESS THAN 1m.
3. WHERE THERE IS INSUFFICIENT SPACE AVAILABLE ON THE VERGE TO PROVIDE A MINIMUM LANDING OF 1.2m, LONGITUDINAL RAMPS SHALL BE CONSTRUCTED. AS A FIRST ALTERNATIVE, DESIGNERS SHALL APPLY THE "COMBINATION DROP" AS PER DRAWING **RD4.9**. WHERE THIS OPTION IS NOT POSSIBLE, THE "FULL DROP" OPTION SHALL BE APPLIED AS PER DRAWING **RD4.10**.
4. TGSIs TO BE PLACED PARALLEL WITH THE DIRECTION OF TRAVEL OF THE PEDESTRIAN CROSSING.
5. REFER TO DRAWING **RD2.2** FOR THE DROPPED KERB DETAILS (TYPE 'E' OR 'F').
6. THIS EXAMPLE IS BASED ON A CBD ENVIRONMENT, WHERE THE FULL WIDTH OF THE ROAD VERGE IS TYPICALLY SURFACED.
7. ALTERNATIVE SURFACE TREATMENTS MAY BE APPLIED, SUBJECT TO APPROVAL AUTHORITY.

FRL: FINISHED ROAD LEVEL
DOT: DIRECTION OF TRAVEL

CITY OF CAPE TOWN
ISIXEKO SASEKAPA
STAD KAAPSTAD

CITY OF CAPE TOWN
URBAN MOBILITY

TITLE

PEDESTRIAN RAMPS: CONTROLLED PEDESTRIAN CROSSING BLOCK AND SIGNALISED CROSSINGS
WIDE VERGE - SIDEWALK WITH UNMADE VERGE (PREFERRED)

STANDARDS AND GUIDELINES DETAILS

SCALE	PAPER
SHOWN	A4
DRAWING No.	REV
RD4.7	D

P:\CAD\R&SD\ITI_01 Design\T_1000B Standards\T_1000RS DESIGN_Roads and Stormwater\0002 Drawings_Version4.0\01 RD\RD4.7 – Pedestrian Ramps – Controlled_RevD.dwg

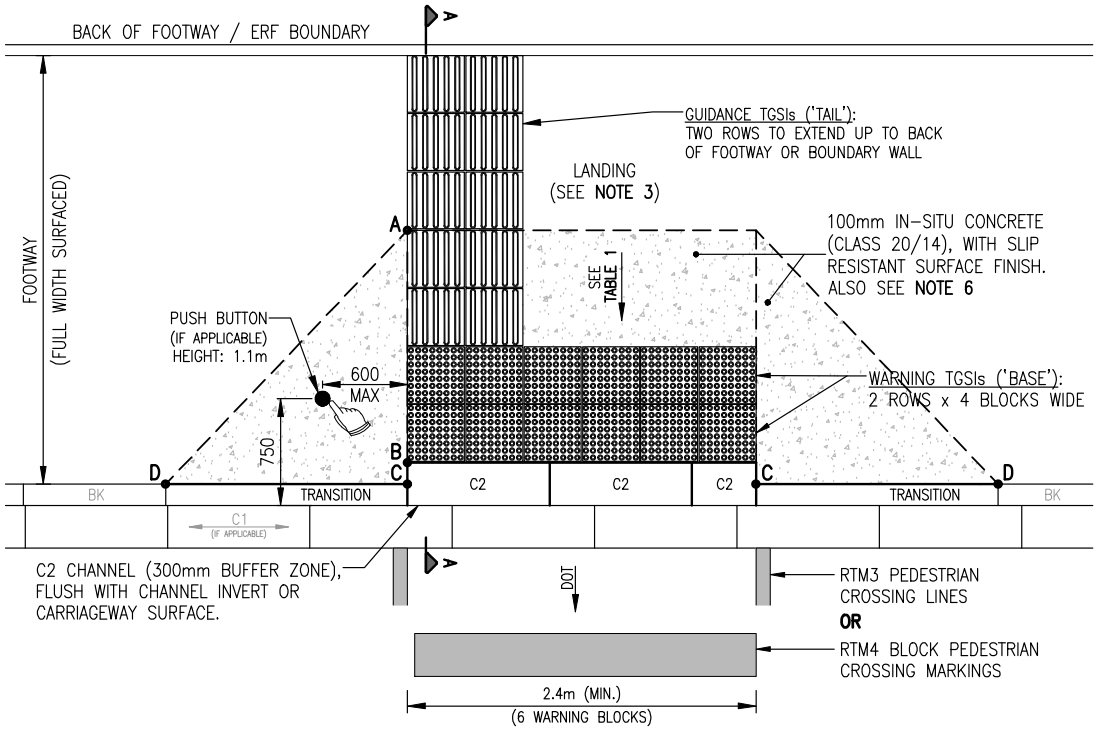

PLAN VIEW
SCALE 1:50

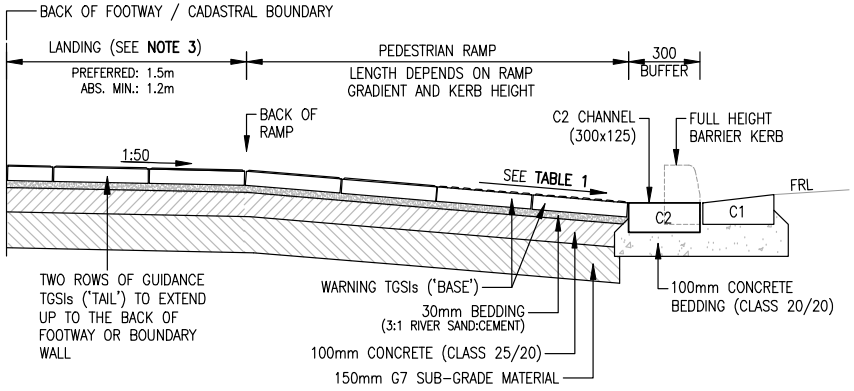

SECTION A–A
N.T.S.

TABLE 1
RAMP GRADIENT

PREFERENCE	GRADIENT
PREFERRED	1:20 (5%)
ACCEPTABLE	1:15 (6.7%)
ABSOLUTE MAXIMUM	1:12 (8.3%)

NOTES:

1. REFER TO SECTION **5.6** AND **5.7** FOR FURTHER DETAILS ON PEDESTRIAN RAMPS AND TGSIs.
2. A MAXIMUM SLOPE OF 1:12 BETWEEN POINTS "C–D" (ALONG THE TRANSITIONS) IS PREFERRED. WHERE THE AFOREMENTIONED SLOPE IS NOT POSSIBLE, THE LENGTH OF THE TRANSITIONS SHALL NEVER BE LESS THAN 1m.
3. WHERE THERE IS INSUFFICIENT SPACE AVAILABLE ON THE VERGE TO PROVIDE A MINIMUM LANDING OF 1.2m, LONGITUDINAL RAMPS SHALL BE CONSTRUCTED. AS A FIRST ALTERNATIVE, DESIGNERS SHALL APPLY THE "COMBINATION DROP" AS PER DRAWING **RD4.9**. WHERE THIS OPTION IS NOT POSSIBLE, THE "FULL DROP" OPTION SHALL BE APPLIED AS PER DRAWING **RD4.10**.
4. TGSIs TO BE PLACED PARALLEL WITH THE DIRECTION OF TRAVEL OF THE PEDESTRIAN CROSSING.
5. REFER TO DRAWING **RD2.2** FOR THE DROPPED KERB DETAILS (TYPE 'E' OR 'F').
6. ALTERNATIVE SURFACE TREATMENTS MAY BE APPLIED, SUBJECT TO APPROVAL AUTHORITY.

FRL: FINISHED ROAD LEVEL
DOT: DIRECTION OF TRAVEL

CITY OF CAPE TOWN
ISIXEKO SASEKAPA
STAD KAAPSTAD

CITY OF CAPE TOWN
URBAN MOBILITY

TITLE

PEDESTRIAN RAMPS: CONTROLLED PEDESTRIAN CROSSINGS BLOCK AND SIGNALISED CROSSINGS WIDE VERGE - FULL VERGE SURFACED (PREFERRED)

STANDARDS AND GUIDELINES DETAILS

SCALE	PAPER
SHOWN	A4
DRAWING No.	REV
RD4.8	C

P:\CAD\R&SD\ITI_01 Design\T_1000B Standards\T_1000RS DESIGN_Roads and Stormwater\0002 Drawings_Version4.0\01 RD\RD4.8 – Pedestrian Ramps – Controlled_RevC.dwg

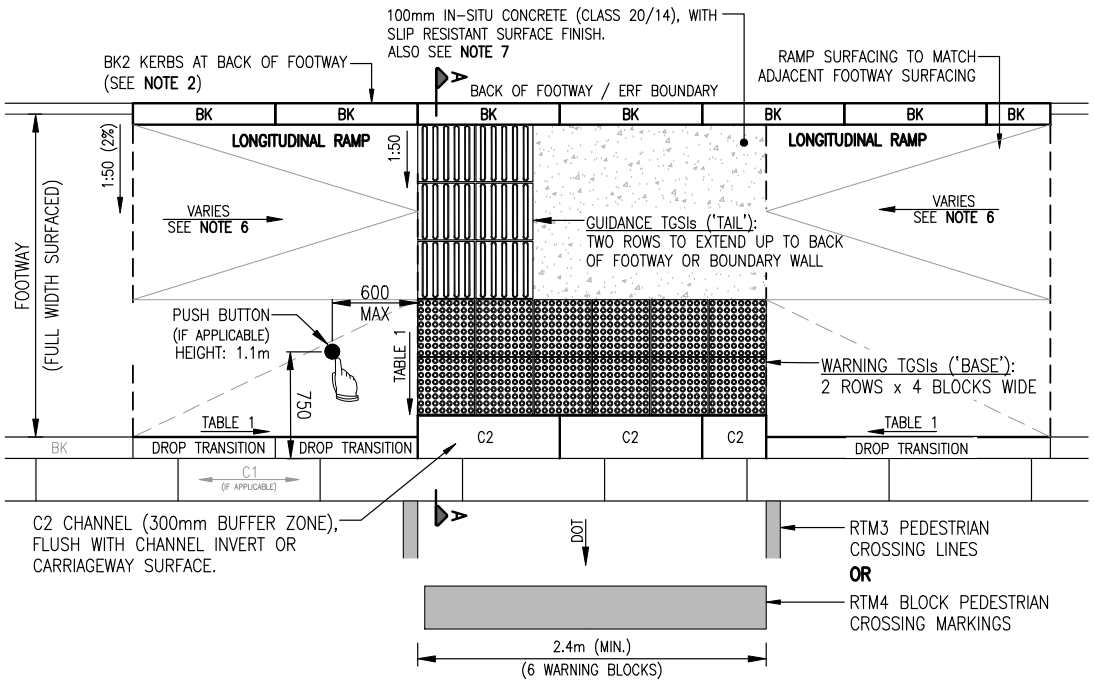

PLAN VIEW
SCALE 1:50

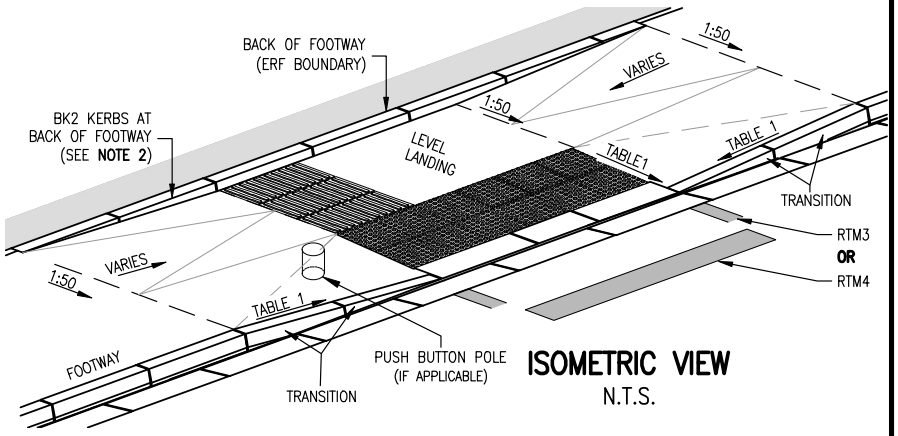

ISOMETRIC VIEW
N.T.S.

TABLE 1 RAMP GRADIENT	
PREFERENCE	GRADIENT
PREFERRED	1:20 (5%)
ACCEPTABLE	1:15 (6.7%)
ABSOLUTE MAXIMUM	1:12 (8.3%)

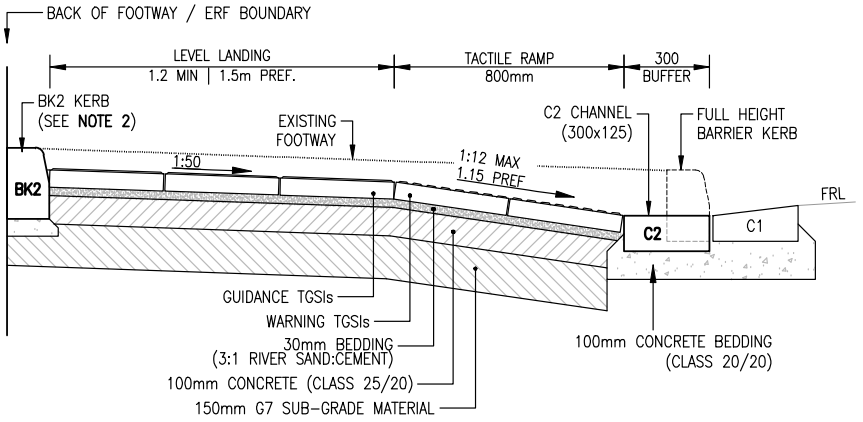

SECTION A–A
SCALE 1:25

FRL: FINISHED ROAD LEVEL
DOT: DIRECTION OF TRAVEL

NOTES:

1. REFER TO SECTION **5.6** AND **5.7** FOR FURTHER DETAILS ON PEDESTRIAN RAMPS AND TGSIs.
2. IF A SOLID BOUNDARY WALL IS PRESENT OR THERE IS NO FLOODING RISK TO THE ADJACENT PRIVATE PROPERTY, THE BARRIER KERBS MAY BE OMITTED.
3. TGSIs TO BE PLACED PARALLEL WITH THE DIRECTION OF TRAVEL OF THE PEDESTRIAN CROSSING.
4. REFER TO DRAWING **RD2.2** FOR THE DROPPED KERB DETAILS (TYPE 'E' OR 'F').
5. WHERE A MINIMUM LANDING OF 1.2m IS NOT POSSIBLE, THE "FULL DROP" OPTION SHALL BE APPLIED AS PER DRAWING **RD4.10**.
6. GRADIENT DEPENDENT ON KERB HEIGHT AND TRANSITION LENGTH, BUT SHALL NEVER EXCEED 1:12.
7. ALTERNATIVE SURFACE TREATMENTS MAY BE APPLIED, SUBJECT TO APPROVAL AUTHORITY.

CITY OF CAPE TOWN
ISIXEKO SASEKAPA
STAD KAAPSTAD

CITY OF CAPE TOWN
URBAN MOBILITY

TITLE

PEDESTRIAN RAMPS: BLOCK & SIGNAL CONTROLLED PEDESTRIAN CROSSINGS
NARROW VERGE (SPACE CONSTRAINT)
COMBINATION DROP (PARTIAL DROP) (NOT IDEAL, BUT ACCEPTABLE)

STANDARDS AND GUIDELINES DETAILS

SCALE	PAPER
SHOWN	A4
DRAWING No.	REV
RD4.9	D

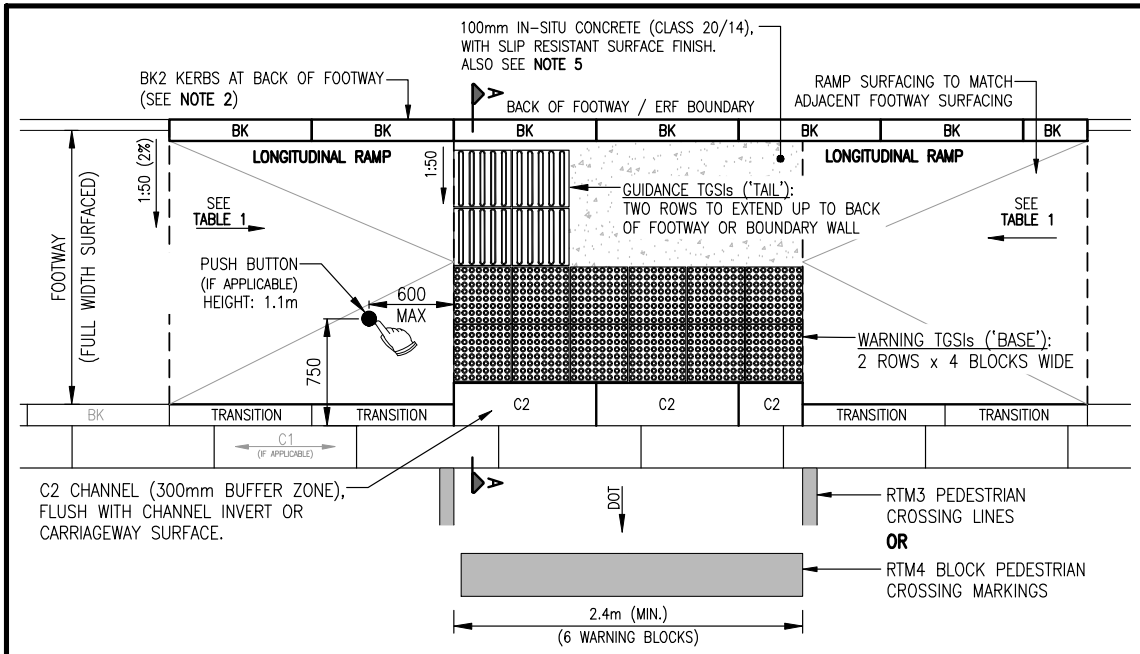

PLAN VIEW
SCALE 1:50

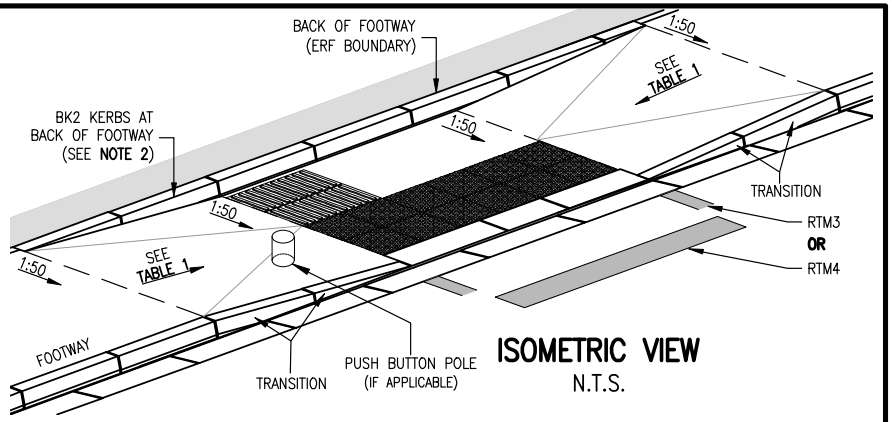

ISOMETRIC VIEW
N.T.S.

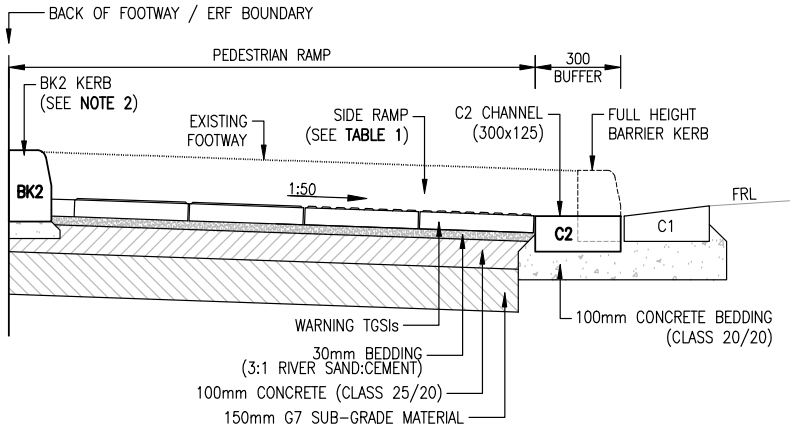

SECTION A–A
SCALE 1:25

TABLE 1
RAMP GRADIENT

PREFERENCE	GRADIENT
PREFERRED	1:20 (5%)
ACCEPTABLE	1:15 (6.7%)
ABSOLUTE MAXIMUM	1:12 (8.3%)

NOTES:

1. REFER TO SECTION **5.6** AND **5.7** FOR FURTHER DETAILS ON PEDESTRIAN RAMPS AND TGSIs.
2. IF A SOLID BOUNDARY WALL IS PRESENT OR THERE IS NO FLOODING RISK TO THE ADJACENT PRIVATE PROPERTY, THE BARRIER KERBS MAY BE OMITTED.
3. TGSIs TO BE PLACED PARALLEL WITH THE DIRECTION OF TRAVEL OF THE PEDESTRIAN CROSSING.
4. REFER TO DRAWING **RD2.2** FOR THE DROPPED KERB DETAILS (TYPE 'E' OR 'F').
5. ALTERNATIVE SURFACE TREATMENTS MAY BE APPLIED, SUBJECT TO APPROVAL AUTHORITY.
6. THIS OPTION IS NOT PREFERRED AND SHOULD BE USED AS A LAST ALTERNATIVE.

FRL: FINISHED ROAD LEVEL
DOT: DIRECTION OF TRAVEL

CITY OF CAPE TOWN
ISIXEKO SASEKAPA
STAD KAAPSTAD

CITY OF CAPE TOWN
URBAN MOBILITY

TITLE

PEDESTRIAN RAMPS: BLOCK & SIGNAL CONTROLLED PEDESTRIAN CROSSINGS
NARROW VERGE (SPACE CONSTRAINT)
FULL DROP (ACCEPTABLE, BUT NOT PREFERRED)

STANDARDS AND GUIDELINES DETAILS

SCALE	PAPER
SHOWN	A4
DRAWING No.	REV
RD4.10	B

P:\CAD\R&SD\ITI_01 Design\T_1000B Standards\T_1000RS DESIGN_Roads and Stormwater\0002 Drawings_Version4.0\01 RD\RD4.10 – Pedestrian Ramps – Controlled_RevB.dwg

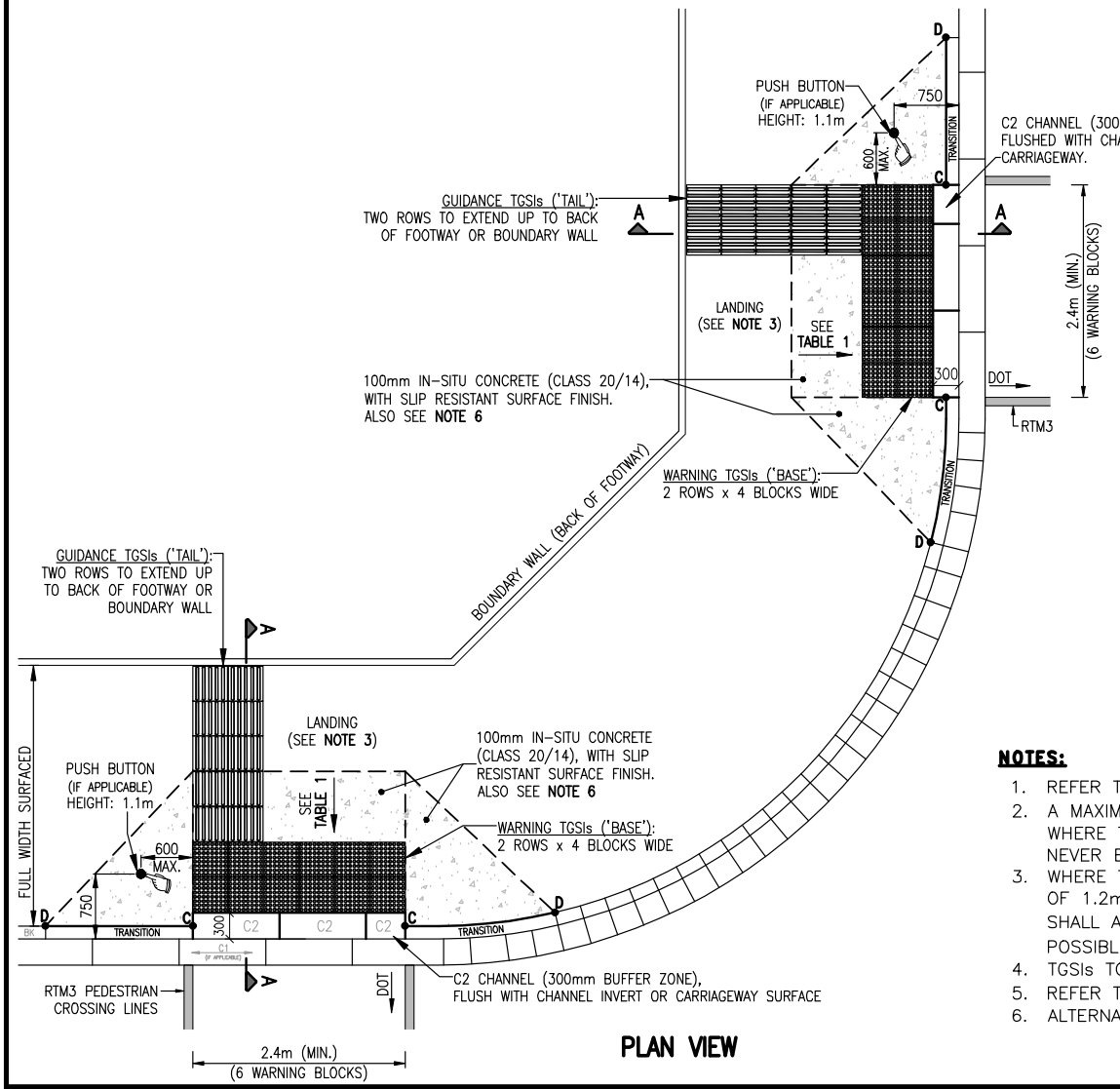

PLAN VIEW

TABLE 1 RAMP GRADIENT	
PREFERENCE	GRADIENT
PREFERRED	1:20 (5%)
ACCEPTABLE	1:15 (6.7%)
ABSOLUTE MAXIMUM	1:12 (8.3%)

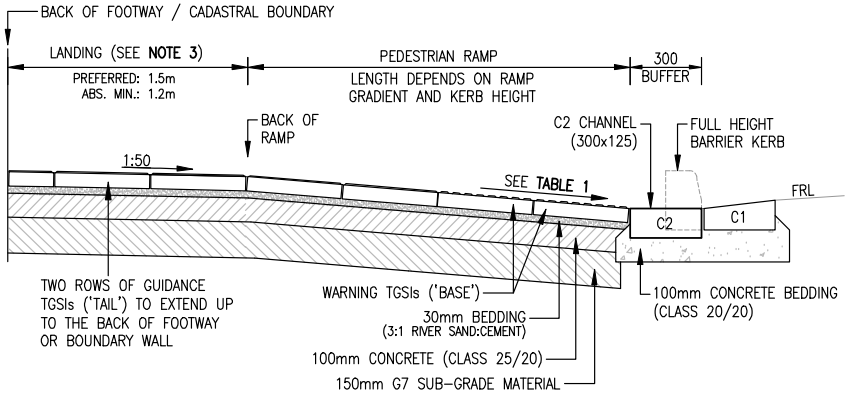

SECTION A–A

NOTES:

1. REFER TO SECTION **5.6** AND **5.7** FOR FURTHER DETAILS ON PEDESTRIAN RAMPS AND TGSIs.
2. A MAXIMUM SLOPE OF 1:12 BETWEEN POINTS "C–D" (ALONG THE TRANSITIONS) IS PREFERRED. WHERE THE AFOREMENTIONED SLOPE IS NOT POSSIBLE, THE LENGTH OF THE TRANSITIONS SHALL NEVER BE LESS THAN 1m.
3. WHERE THERE IS INSUFFICIENT SPACE AVAILABLE ON THE VERGE TO PROVIDE A MINIMUM LANDING OF 1.2m, LONGITUDINAL RAMPS SHALL BE CONSTRUCTED. AS A FIRST ALTERNATIVE, DESIGNERS SHALL APPLY THE "COMBINATION DROP" AS PER DRAWING **RD4.9**. WHERE THIS OPTION IS NOT POSSIBLE, THE "FULL DROP" OPTION SHALL BE APPLIED AS PER DRAWING **RD4.10**.
4. TGSIs TO BE PLACED PARALLEL WITH THE DIRECTION OF TRAVEL OF THE PEDESTRIAN CROSSING.
5. REFER TO DRAWING **RD2.2** FOR THE DROPPED KERB DETAILS (TYPE 'E' OR 'F').
6. ALTERNATIVE SURFACE TREATMENTS MAY BE APPLIED, SUBJECT TO APPROVAL AUTHORITY.

FRL: FINISHED ROAD LEVEL
DOT: DIRECTION OF TRAVEL

CITY OF CAPE TOWN
ISIXEKO SASEKAPA
STAD KAAPSTAD

CITY OF CAPE TOWN
URBAN MOBILITY

TITLE

PEDESTRIAN RAMPS: CONTROLLED PEDESTRIAN CROSSINGS SIGNALISED INTERSECTION

PEDESTRIAN CROSSINGS ON STRAIGHT EDGES (PREFERRED)

STANDARDS AND GUIDELINES DETAILS

SCALE	PAPER
N.T.S.	A4
DRAWING No.	REV
RD4.11	B

P:\CAD\R&SD\ITI_01 Design\T_1000B Standards\T_1000RS DESIGN_Roads and Stormwater\0002 Drawings_Version4.0\01 RD\RD4.11 – Pedestrian Ramps – Controlled_RevC.dwg

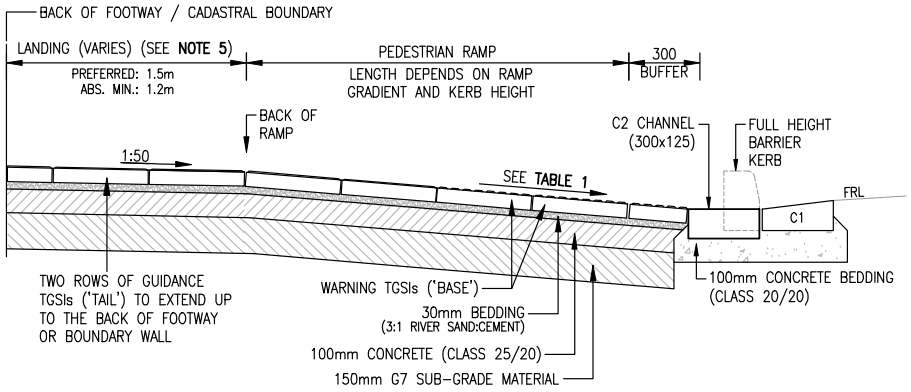

SECTION A–A

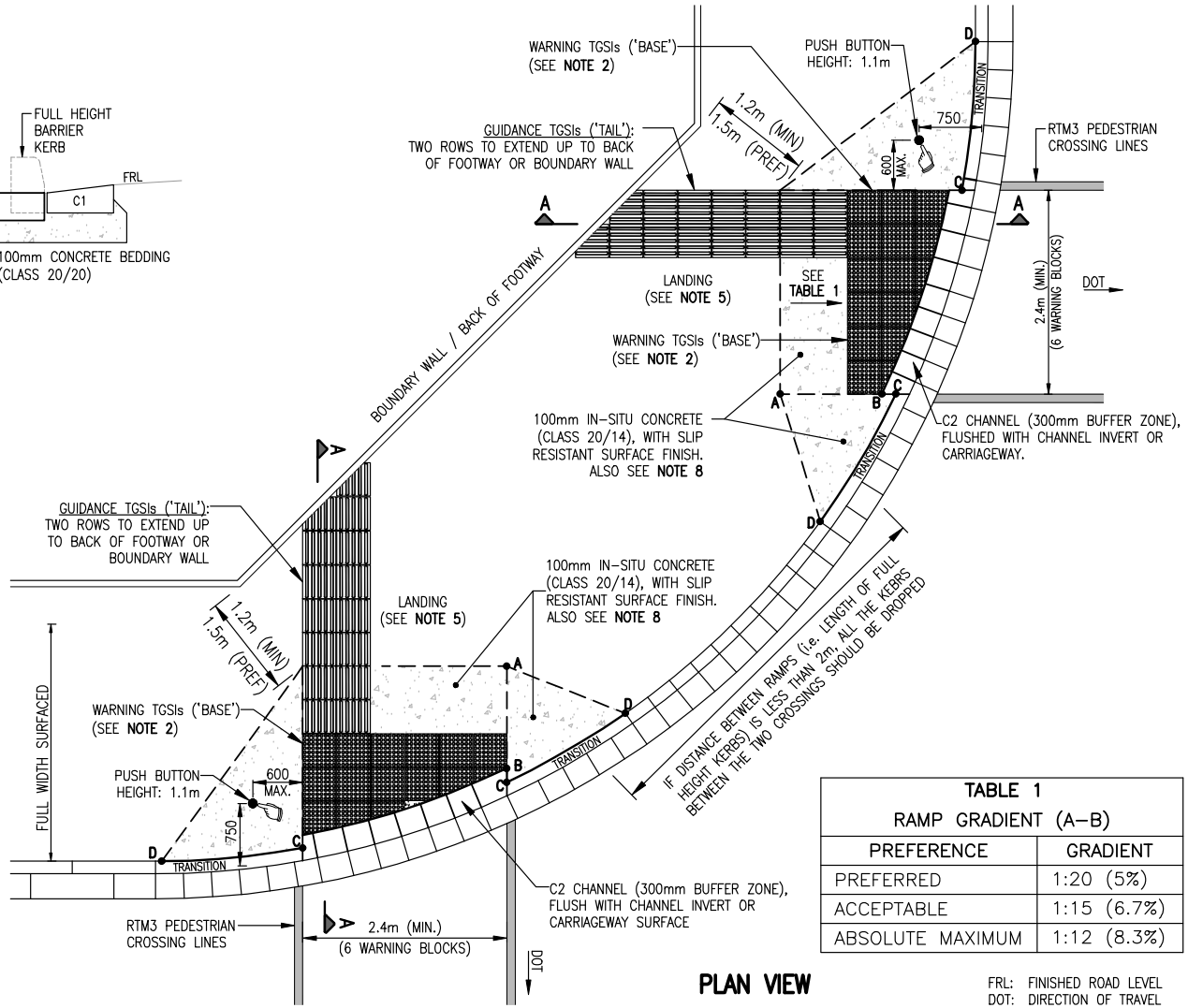

PLAN VIEW

FRL: FINISHED ROAD LEVEL
DOT: DIRECTION OF TRAVEL

NOTES:

1. REFER TO SECTION **5.6** AND **5.7** FOR FURTHER DETAILS ON PEDESTRIAN RAMPS AND TGSIs.
2. MAXIMUM DISTORTION OF WARNING TGSIs (ALSO REFER TO SECTION **5.7.4**):
   - LONG SIDE: 3 BLOCKS
   - SHORT SIDE: 1 BLOCK
3. ONLY MECHANICAL CUTTING OF TGSIs ARE PERMITTED.
4. A MAXIMUM SLOPE OF 1:12 BETWEEN POINTS "C–D" (ALONG THE TRANSITIONS) IS PREFERRED. WHERE THE AFOREMENTIONED SLOPE IS NOT POSSIBLE, THE LENGTH OF THE TRANSITIONS SHALL NEVER BE LESS THAN 1m.
5. WHERE THERE IS INSUFFICIENT SPACE AVAILABLE ON THE VERGE TO PROVIDE A MINIMUM LANDING OF 1.2m, LONGITUDINAL RAMPS SHALL BE CONSTRUCTED. AS A FIRST ALTERNATIVE, DESIGNERS SHALL APPLY THE "COMBINATION DROP" AS PER DRAWING **RD4.9**. WHERE THIS OPTION IS NOT POSSIBLE, THE "FULL DROP" OPTION SHALL BE APPLIED AS PER DRAWING **RD4.10**.
6. TGSIs TO BE PLACED PARALLEL WITH THE DIRECTION OF TRAVEL OF THE PEDESTRIAN CROSSING.
7. REFER TO DRAWING **RD2.2** FOR THE DROPPED KERB DETAILS (TYPE 'E' OR 'F').
8. ALTERNATIVE SURFACE TREATMENTS MAY BE APPLIED, SUBJECT TO APPROVAL AUTHORITY.

TABLE 1
RAMP GRADIENT (A–B)

PREFERENCE	GRADIENT
PREFERRED	1:20 (5%)
ACCEPTABLE	1:15 (6.7%)
ABSOLUTE MAXIMUM	1:12 (8.3%)

CITY OF CAPE TOWN
ISIXEKO SASEKAPA
STAD KAAPSTAD

CITY OF CAPE TOWN
URBAN MOBILITY

TITLE

PEDESTRIAN RAMPS: CONTROLLED PEDESTRIAN CROSSINGS SIGNALISED INTERSECTION OBLIQUE RAMPS (ACCEPTABLE , BUT NOT PREFERRED)

STANDARDS AND GUIDELINES DETAILS

SCALE	PAPER
N.T.S.	A4
DRAWING No.	REV
RD4.12	C

P:\CAD\R&SD\ITI_01 Design\T_1000B Standards\T_1000RS DESIGN_Roads and Stormwater\0002 Drawings_Version4.0\01 RD\RD4.12 – Pedestrian Ramps – Controlled_RevC.dwg

TABLE 1 RAMP GRADIENT (A–B)	
PREFERENCE	GRADIENT
PREFERRED	1:20 (5%)
ACCEPTABLE	1:15 (6.7%)
ABSOLUTE MAXIMUM	1:12 (8.3%)

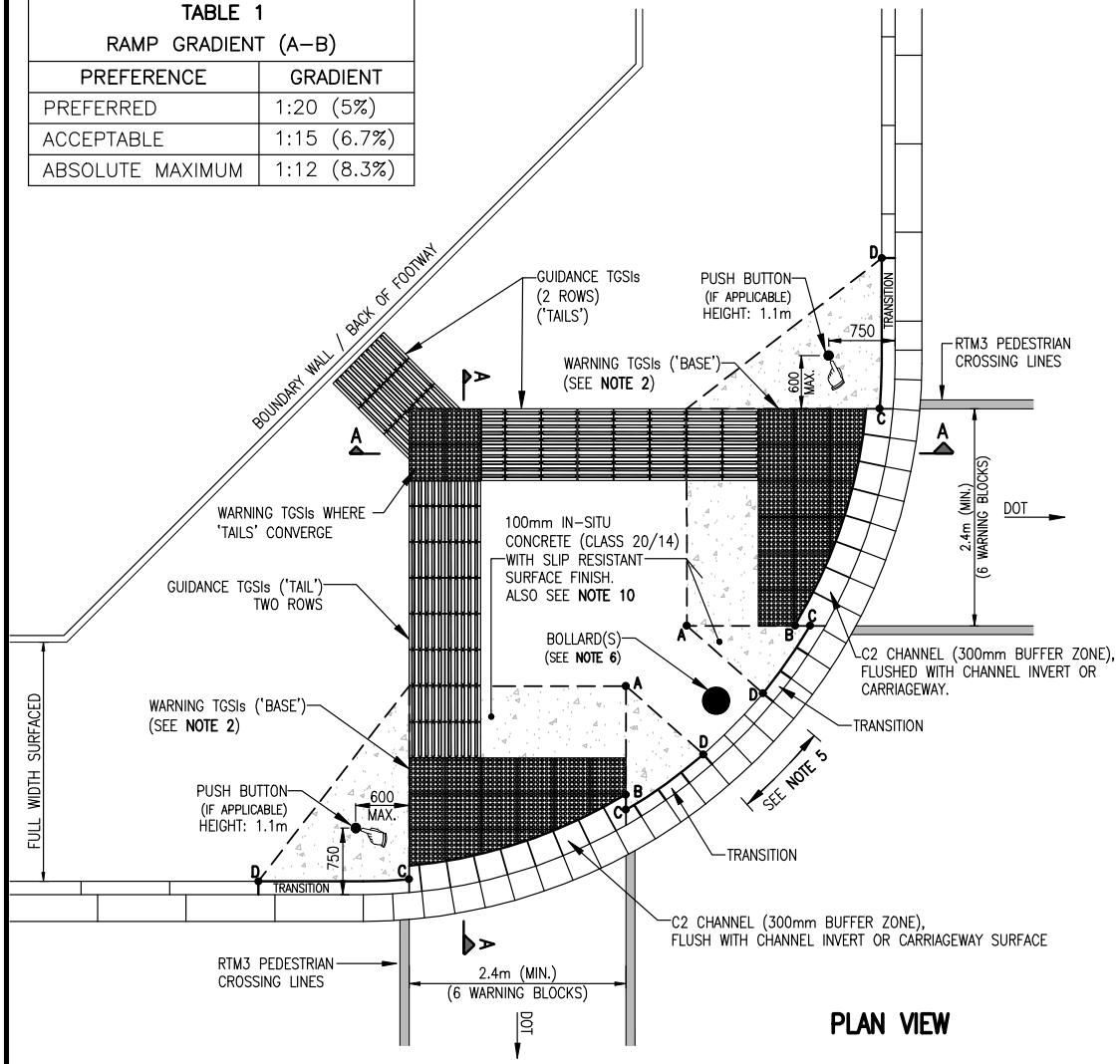

PLAN VIEW

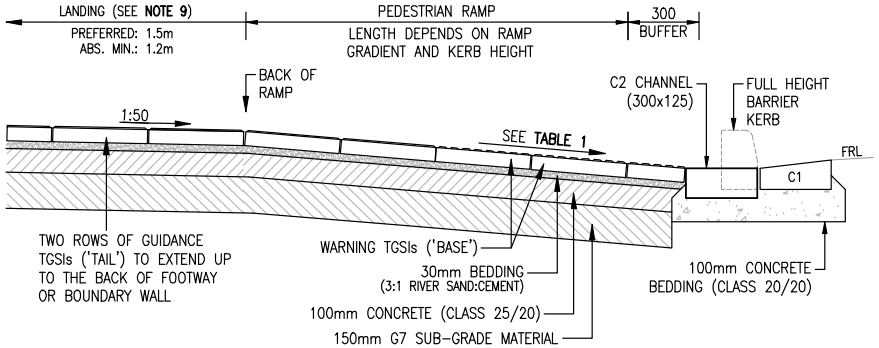

PARTIAL SECTION A–A
N.T.S.

NOTES:

1. REFER TO SECTION **5.6** AND **5.7** FOR FURTHER DETAILS ON PEDESTRIAN RAMPS AND TGSIs.
2. MAXIMUM DISTORTION OF WARNING TGSIs (ALSO REFER TO SECTION **5.7.4**):
   - LONG SIDE: 3 BLOCKS
   - SHORT SIDE: 1 BLOCK
3. REFER TO DRAWING **RD2.2** FOR THE DROPPED KERB DETAILS (TYPE 'E' OR 'F').
4. TGSIs TO BE PLACED PARALLEL WITH THE DIRECTION OF TRAVEL OF THE PEDESTRIAN CROSSING.
5. IF THE DISTANCE BETWEEN RAMPS (i.e. LENGTH OF FULL HEIGHT KERBS) IS LESS THAN 1.5m, ALL THE KERBS BETWEEN THE TWO CROSSINGS SHOULD BE DROPPED.
6. IF THE KERBS BETWEEN THE CROSSINGS ARE DROPPED FLUSH WITH THE ROADWAY OR CHANNEL INVERT, THE INSTALLATION OF BOLLARDS SHOULD BE CONSIDERED, IN ORDER TO PROVIDE PROTECTION FOR PEDESTRIAN AND THE TRAFFIC SIGNAL INFRASTRUCTURE AND PREVENT VEHICLES MOUNTING THE VERGE ILLEGALLY. BOLLARD(S) SHALL BE PAINTED AS PER DRAWING **GE1**.
7. ONLY MECHANICAL CUTTING OF TGSIs ARE PERMITTED.
8. A MAXIMUM SLOPE OF 1:12 BETWEEN POINTS "C–D" (ALONG THE TRANSITIONS) IS PREFERRED. WHERE THE AFOREMENTIONED SLOPE IS NOT POSSIBLE, THE LENGTH OF THE TRANSITIONS SHALL NEVER BE LESS THAN 1m.
9. WHERE THERE IS INSUFFICIENT SPACE AVAILABLE ON THE VERGE TO PROVIDE A MINIMUM LANDING OF 1.2m, LONGITUDINAL RAMPS SHALL BE CONSTRUCTED. AS A FIRST ALTERNATIVE, DESIGNERS SHALL APPLY THE "COMBINATION DROP" AS PER DRAWING **RD4.9**. WHERE THIS OPTION IS NOT POSSIBLE, THE "FULL DROP" OPTION SHALL BE APPLIED AS PER DRAWING **RD4.10**.
10. ALTERNATIVE SURFACE TREATMENTS MAY BE APPLIED, SUBJECT TO APPROVAL

FRL: FINISHED ROAD LEVEL
DOT: DIRECTION OF TRAVEL

CITY OF CAPE TOWN
ISIXEKO SASEKAPA
STAD KAAPSTAD

CITY OF CAPE TOWN
URBAN MOBILITY

TITLE

PEDESTRIAN RAMPS: CONTROLLED PEDESTRIAN CROSSINGS
SIGNALISED INTERSECTION
OBLIQUE RAMPS IN CLOSE PROXIMITY (NOT PREFERRED)

STANDARDS AND GUIDELINES DETAILS

SCALE	PAPER
N.T.S.	A4
DRAWING No.	REV
RD4.13	C

NOTES:

1. THIS DRAWING MUST BE READ IN CONJUNCTION WITH CHAPTER 6.
2. CARRIAGEWAY CROSSING LAYER WORKS SHALL BE IN ACCORDANCE WITH TABLE 6-1.
3. REFER TO DRAWING RD2.1 FOR DROP KERB DETAILS (TYPE 'A').
4. TRANSITION LENGTH (i.e. NUMBER OF KERBS) TO SUIT THE MAXIMUM ALLOWABLE SLOPE FOR CROSS RAMP FOR PEDESTRIAN.
5. UNLESS APPROVED OTHERWISE, CARRIAGEWAY CROSSING WIDTH TO COMPLY WITH THE CITY'S DEVELOPMENT MANAGEMENT SCHEME (i.e. MINIMUM: 2.4m ; MAXIMUM: 8m)

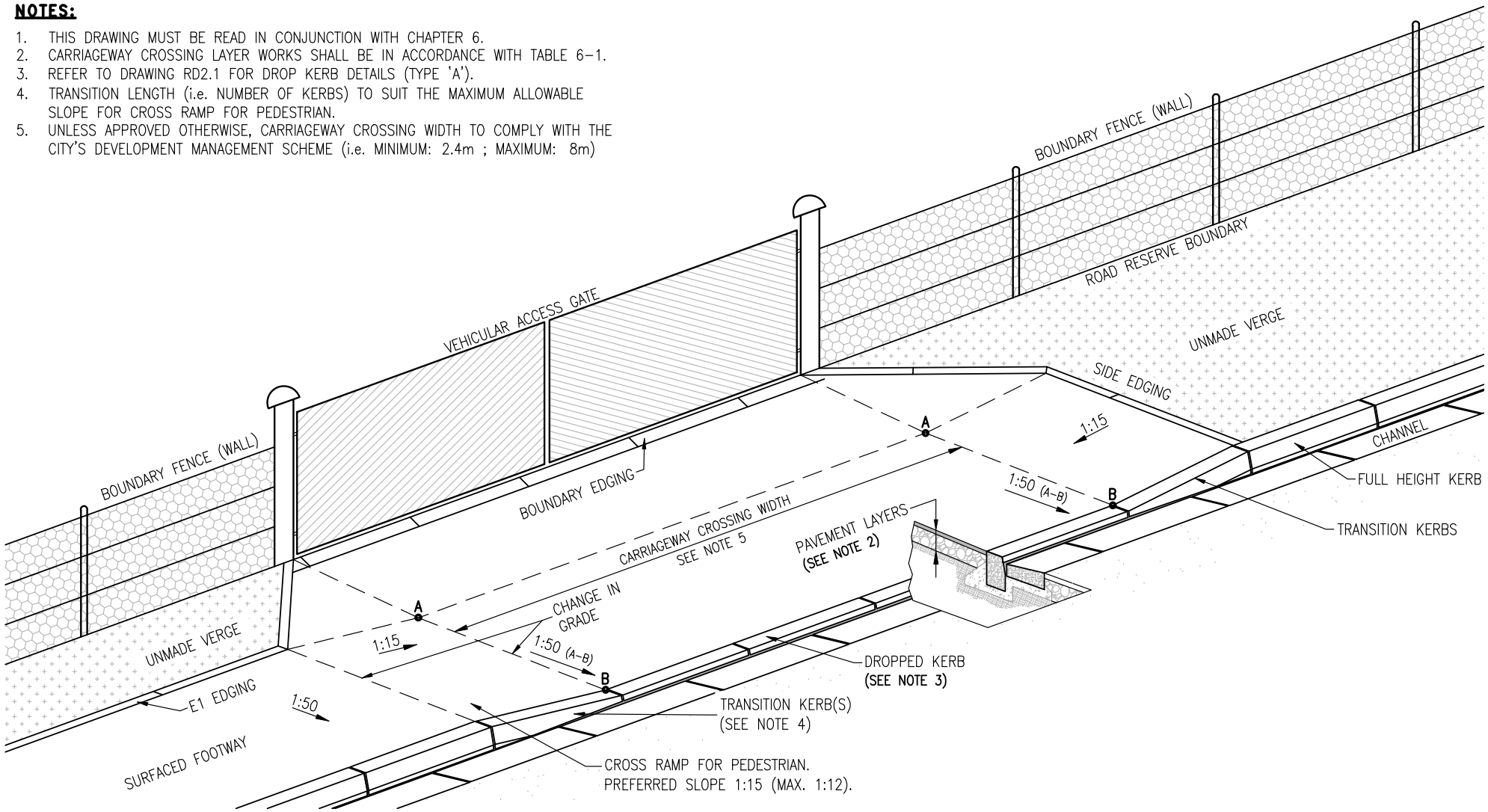

CITY OF CAPE TOWN
ISIXEKO SASEKAPA
STAD KAAPSTAD

CITY OF CAPE TOWN
URBAN MOBILITY

TITLE

TYPICAL CARRIAGEWAY CROSSING DETAILS (VEHICULAR ACCESS)

STANDARDS AND GUIDELINES DETAILS

SCALE	PAPER
N.T.S.	A4
DRAWING No.	REV
RD5.1	B

P:\CAD\R&SD\ITI_01 Design\T_1000B Standards\T_1000RS DESIGN_Roads and Stormwater\0002 Drawings_Version4.0\01 RD\RD5.1 – Typical Carriageway Crossing Details_RevB.dwg

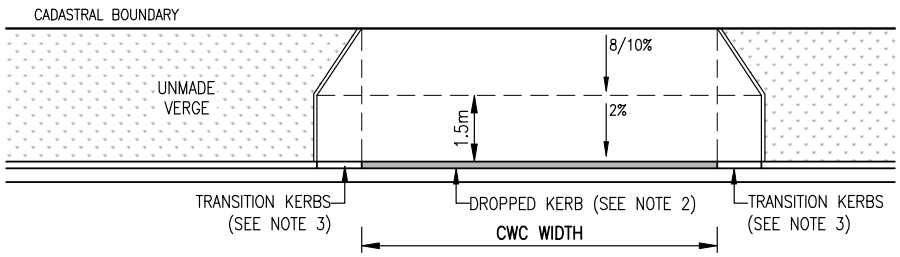

TYPE B1

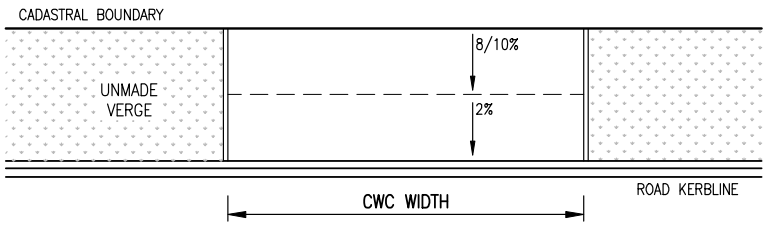

TYPE M1

UNMADE VERGE

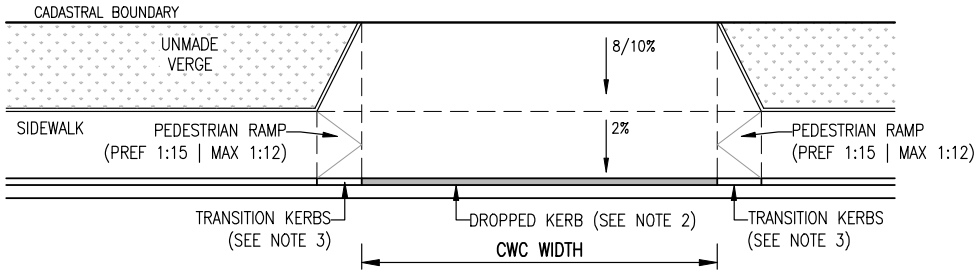

TYPE B2

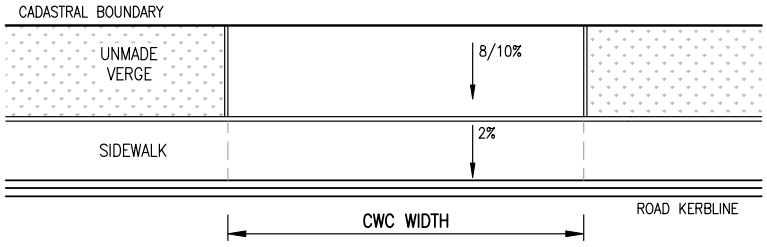

TYPE M2

WIDE VERGE WITH SURFACED SIDEWALK

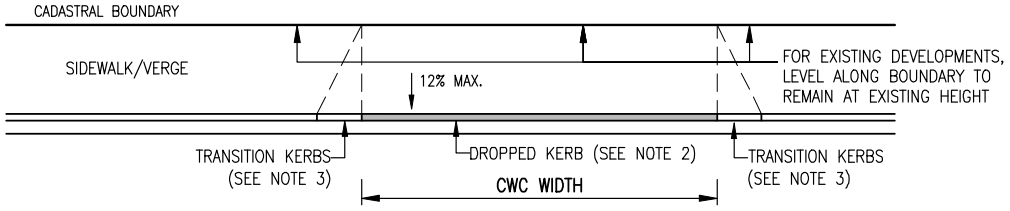

TYPE B3

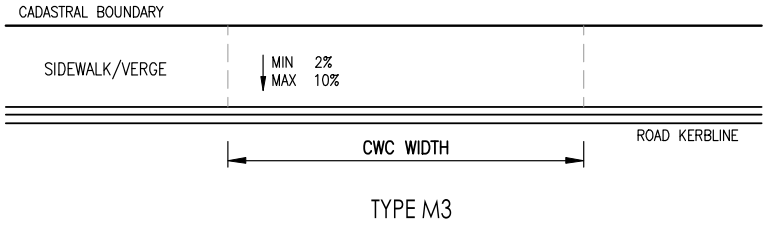

TYPE M3

NARROW VERGE AND FULL WIDTH SURFACED SIDEWALK

BARRIER KERBS

MOUNTABLE KERBS

NOTES:

1. THIS DRAWING MUST BE READ IN CONJUNCTION WITH CHAPTER 6 (SPECIFICALLY SECTION 6.3.4 W.R.T. GRADIENTS).
2. REFER TO DRAWING RD2.1 FOR DROPPED KERB DETAILS (TYPE 'A').
3. TRANSITION LENGTH (i.e. NUMBER OF KERBS) TO SUIT THE MAXIMUM ALLOWABLE SLOPE FOR THE PEDESTRIANS RAMP (PREF 1:15 ; MAX 1:12).
4. UNLESS APPROVED OTHERWISE, THE CARRIAGEWAY CROSSING WIDTH TO COMPLY WITH THE CITY'S DEVELOPMENT MANAGEMENT SCHEME (SEE TABLE 1).

TABLE 1 CWC Width	
Minimum	2.4m
Maximum	8m

CWC: CARRIAGEWAY CROSSING

CITY OF CAPE TOWN
ISIXEKO SASEKAPA
STAD KAAPSTAD

CITY OF CAPE TOWN
URBAN MOBILITY

TITLE

VARIOUS CARRIAGEWAY CROSSING TYPES

STANDARDS AND GUIDELINES DETAILS

SCALE	PAPER
N.T.S.	A4
DRAWING No.	REV
RD5.2	B

P:\CAD\R&SD\ITI_01 Design\T_1000B Standards\T_1000RS DESIGN_Roads and Stormwater\0002 Drawings_Version4.0\01 RD\RD5.2 – Carriageway Crossing Types_RevB.dwg

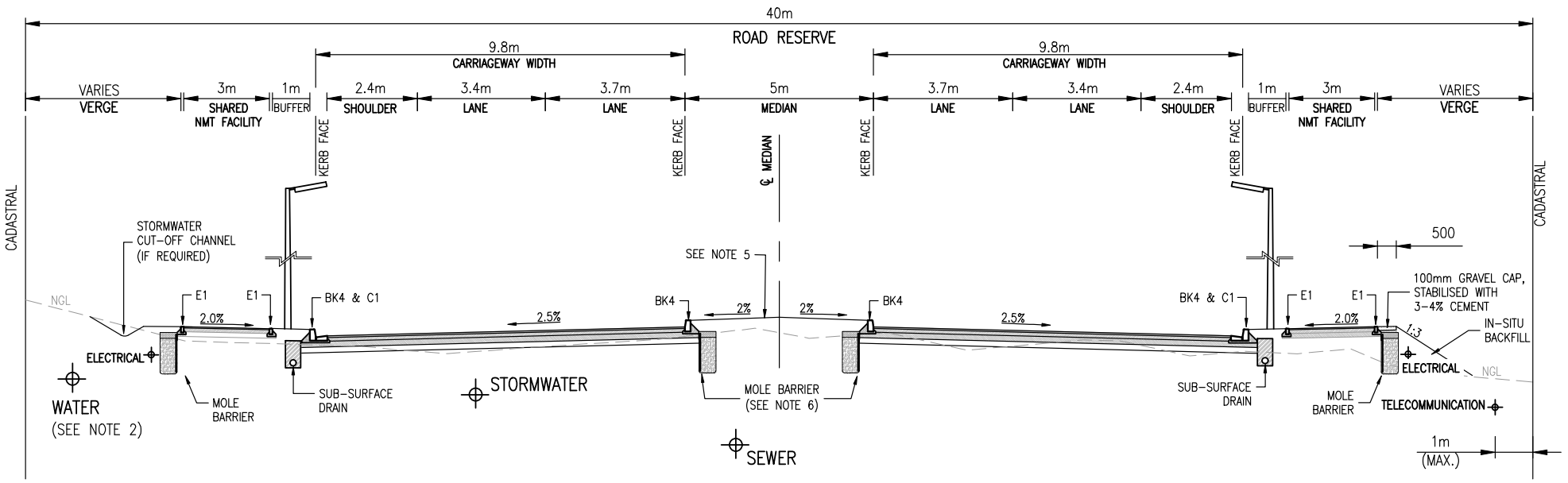

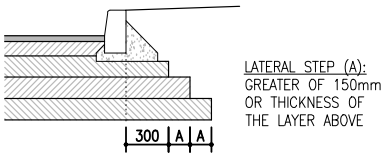

LAYER STEP DETAIL
(NO SUB-SURFACE DRAIN PRESENT)

NOTES:

1. DIMENSIONS IN mm, UNLESS STATED/ANNOTATED OTHERWISE.
2. POSITION OF WATERMAIN DEPENDS UPON VERGE WIDTH AND SIZE OF WATERMAIN.
3. STREET LIGHT POLES (AND OTHER STREET FURNITURE) MUST BE PLACED TO ALWAYS LEAVE A MINIMUM 1.1m LATERAL CLEARANCE SPACE ON FOOTWAYS.
4. PAVEMENT LAYERS SHALL BE DESIGNED AS PER CHAPTER 8.
5. MEDIAN ISLAND TREATMENT AS PER APPROVAL AUTHORITY'S REQUIREMENTS.
6. IF THE MEDIAN IS SURFACED, THEN MOLE BARRIERS IN THE MEDIAN WILL NOT BE REQUIRED.
7. POSITION OF UNDERGROUND STORMWATER AND SEWER SERVICES TO BE DISCUSSED WITH APPROVAL AUTHORITY. NO MANHOLES ALLOWED IN VEHICLE WHEEL TRACKS.
8. NO OUTFALL CHANNELS ARE ALLOWED ON THE HIGH SIDE OF THE CARRIAGEWAY. IF CIRCUMSTANCES REQUIRE THE PROVISION OF A CHANNEL ON THE HIGH SIDE OF THE CARRIAGEWAY (e.g. DRAINAGE OR CONSTRUCTABILITY), IT SHALL BE INFALL CHANNELS. THE PROVISION OF THESE INFALL CHANNELS SHALL BE MOTIVATED AND DISCUSSED WITH THE APPROVAL AUTHORITY. IN SUCH INSTANCES, A STORMWATER SYSTEM SHALL BE PROVIDED TO ACCOMMODATED THE RUNOFF ON THE HIGH SIDE.
9. DRAWING TO BE READ IN CONJUNCTION WITH **SECTION 3.2.2.1.**

NGL: NATURAL GROUND LEVEL
FRL: FINISHED ROAD LEVEL
FSL: FINISHED SURFACE LEVEL

SHEET INDEX:

SHEET 1: SHOULDER AND SHARED NMT FACILITY
SHEET 2: CLASS 2 CYCLE LANE (NO SHOULDER)

CITY OF CAPE TOWN
ISIXEKO SASEKAPA
STAD KAAPSTAD

CITY OF CAPE TOWN
URBAN MOBILITY

TITLE

TYPICAL ROAD CROSS SECTION
CLASS 2 MAJOR ARTERIAL (40m ROAD RESERVE)
SHOULDER AND SHARED NMT FACILITY

STANDARDS AND GUIDELINES DETAILS

SHEET 1

SCALE	PAPER
N.T.S.	A4
DRAWING No.	REV
RD6.1A	A

P:\CAD\R&SD\ITI_01 Design\T_1000B Standards\T_1000RS DESIGN_Roads and Stormwater\0002 Drawings_Version4.0\01 RD\RD6.1A – Typical Section Class 2 Road (40m RR)_RevA.dwg

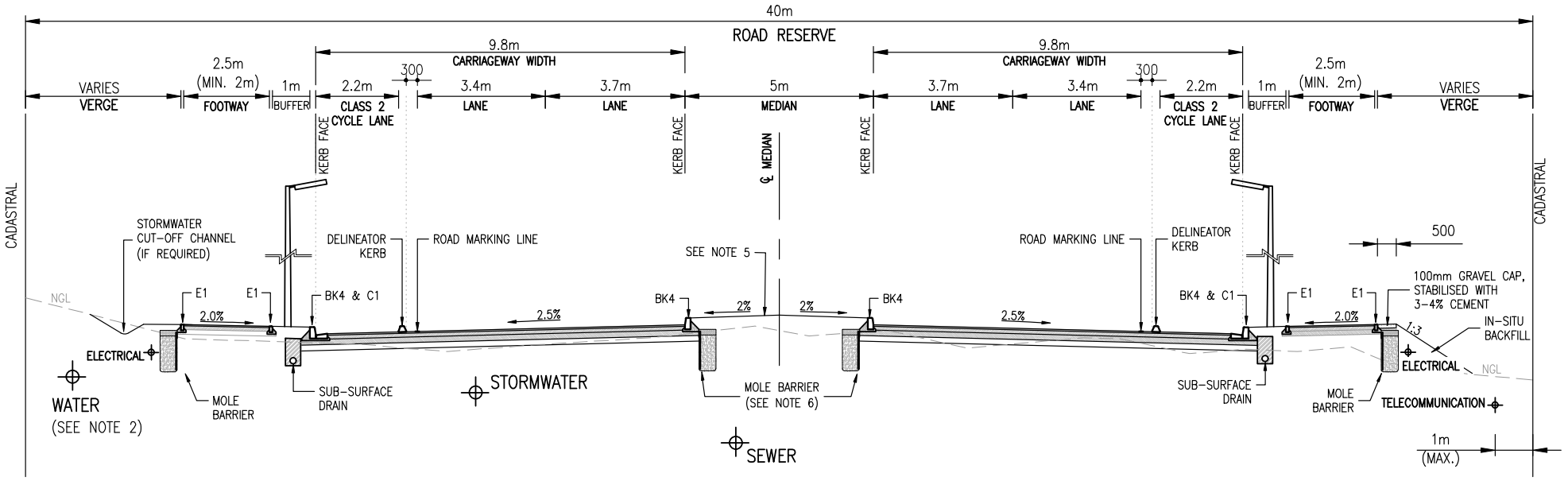

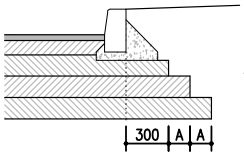

LATERAL STEP (A):
GREATER OF 150mm
OR THICKNESS OF
THE LAYER ABOVE

LAYER STEP DETAIL
(NO SUB-SURFACE DRAIN PRESENT)

NOTES:

1. DIMENSIONS IN mm, UNLESS STATED/ANNOTATED OTHERWISE.
2. POSITION OF WATERMAIN DEPENDS UPON VERGE WIDTH AND SIZE OF WATERMAIN.
3. STREET LIGHT POLES (AND OTHER STREET FURNITURE) MUST BE PLACED TO ALWAYS LEAVE A MINIMUM 1.1m LATERAL CLEARANCE SPACE ON FOOTWAYS.
4. PAVEMENT LAYERS SHALL BE DESIGNED AS PER CHAPTER 8.
5. MEDIAN ISLAND TREATMENT AS PER APPROVAL AUTHORITY'S REQUIREMENTS.
6. IF THE MEDIAN IS SURFACED, THEN MOLE BARRIERS IN THE MEDIAN WILL NOT BE REQUIRED.
7. POSITION OF UNDERGROUND STORMWATER AND SEWER SERVICES TO BE DISCUSSED WITH APPROVAL AUTHORITY. NO MANHOLES ALLOWED IN VEHICLE WHEEL TRACKS.
8. NO OUTFALL CHANNELS ARE ALLOWED ON THE HIGH SIDE OF THE CARRIAGEWAY. IF CIRCUMSTANCES REQUIRE THE PROVISION OF A CHANNEL ON THE HIGH SIDE OF THE CARRIAGEWAY (e.g. DRAINAGE OR CONSTRUCTABILITY), IT SHALL BE INFALL CHANNELS. THE PROVISION OF THESE INFALL CHANNELS SHALL BE MOTIVATED AND DISCUSSED WITH THE APPROVAL AUTHORITY. IN SUCH INSTANCES, A STORMWATER SYSTEM SHALL BE PROVIDED TO ACCOMMODATED THE RUNOFF ON THE HIGH SIDE.
9. DRAWING TO BE READ IN CONJUNCTION WITH **SECTION 3.2.2.1.**

NGL: NATURAL GROUND LEVEL
FRL: FINISHED ROAD LEVEL
FSL: FINISHED SURFACE LEVEL

SHEET INDEX:
SHEET 1: SHOULDER AND SHARED NMT FACILITY
SHEET 2: CLASS 2 CYCLE LANE (NO SHOULDER)

CITY OF CAPE TOWN
ISIXEKO SASEKAPA
STAD KAAPSTAD

CITY OF CAPE TOWN
URBAN MOBILITY

TITLE

TYPICAL ROAD CROSS SECTION
CLASS 2 MAJOR ARTERIAL (40m ROAD RESERVE)
CLASS 2 CYCLE LANE (NO SHOULDER)

STANDARDS AND GUIDELINES DETAILS

SHEET 2

SCALE	PAPER
N.T.S.	A4
DRAWING No.	REV
RD6.1B	A

P:\CAD\R&SD\ITI_01 Design\T_1000B Standards\T_1000RS DESIGN_Roads and Stormwater\0002 Drawings_Version4.0\01 RD\RD6.1B – Typical Section Class 2 Road (40m RR)_RevA.dwg

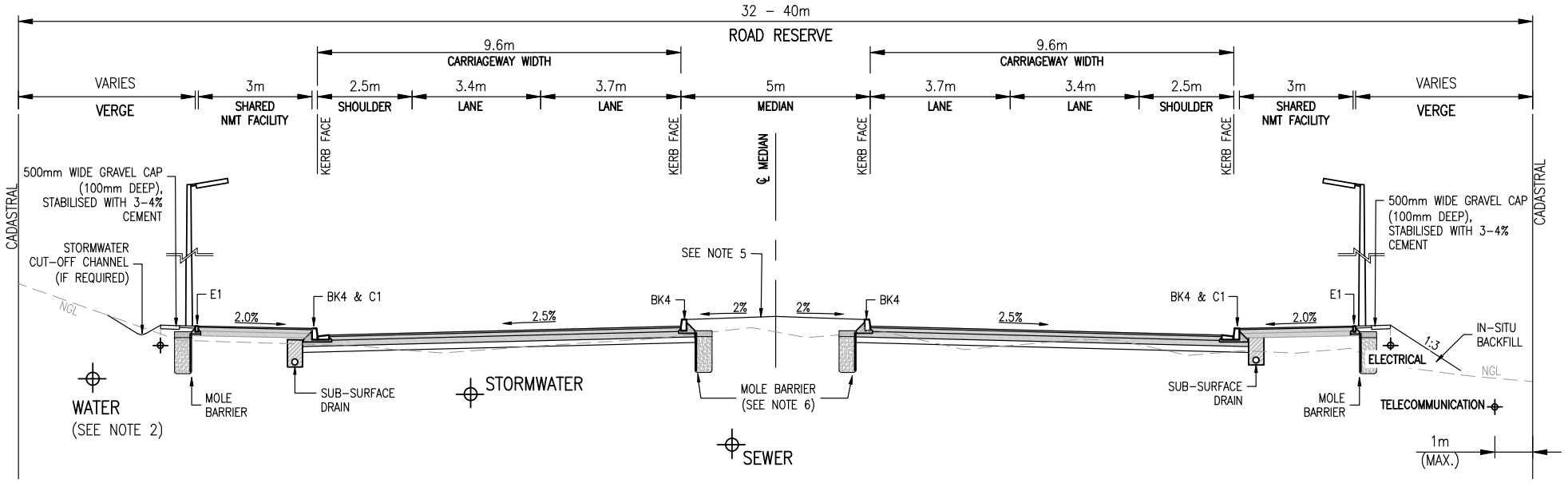

NOTES:

1. DIMENSIONS IN mm, UNLESS STATED/ANNOTATED OTHERWISE.
2. POSITION OF WATERMAIN DEPENDS UPON VERGE WIDTH AND SIZE OF WATERMAIN.
3. STREET LIGHT POLES (AND OTHER STREET FURNITURE) MUST BE PLACED TO ALWAYS LEAVE A MINIMUM 1.1m LATERAL CLEARANCE SPACE ON FOOTWAYS.
4. PAVEMENT LAYERS SHALL BE DESIGNED AS PER CHAPTER 8.
5. MEDIAN ISLAND TREATMENT AS PER APPROVAL AUTHORITY'S REQUIREMENTS.
6. IF THE MEDIAN IS SURFACED, THEN MOLE BARRIERS IN THE MEDIAN WILL NOT BE REQUIRED.
7. POSITION OF UNDERGROUND STORMWATER AND SEWER SERVICES TO BE DISCUSSED WITH APPROVAL AUTHORITY. NO MANHOLES ALLOWED IN VEHICLE WHEEL TRACKS.
8. NO OUTFALL CHANNELS ARE ALLOWED ON THE HIGH SIDE OF THE CARRIAGEWAY. IF CIRCUMSTANCES REQUIRE THE PROVISION OF A CHANNEL ON THE HIGH SIDE OF THE CARRIAGEWAY (e.g. DRAINAGE OR CONSTRUCTABILITY), IT SHALL BE INFALL CHANNELS. THE PROVISION OF THESE INFALL CHANNELS SHALL BE MOTIVATED AND DISCUSSED WITH THE APPROVAL AUTHORITY. IN SUCH INSTANCES, A STORMWATER SYSTEM SHALL BE PROVIDED TO ACCOMMODATED THE RUNOFF ON THE HIGH SIDE.
9. DRAWING TO BE READ IN CONJUNCTION WITH **SECTION 3.2.2.2.**

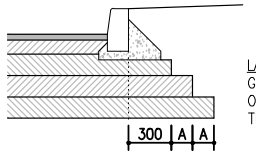

LATERAL STEP (A):
GREATER OF 150mm OR THICKNESS OF THE LAYER ABOVE

LAYER STEP DETAIL
(NO SUB–SURFACE DRAIN PRESENT)

NGL: NATURAL GROUND LEVEL
FRL: FINISHED ROAD LEVEL
FSL: FINISHED SURFACE LEVEL

SHEET INDEX:

SHEET 1: SHOULDER ONLY (NO ON–STREET PARKING
SHEET 2: ON–STREET PARKING WITH CLASS 2 CYCLE FACILITY
SHEET 3: CLASS 2/3 CYCLE FACILITY (NO SHOULDER OR ON–STREET PARKING)

CITY OF CAPE TOWN
ISIXEKO SASEKAPA
STAD KAAPSTAD

CITY OF CAPE TOWN
URBAN MOBILITY

TITLE

TYPICAL ROAD CROSS SECTION
CLASS 3 MINOR ARTERIAL (40m ROAD RESERVE)
SHOULDER ONLY (NO ON-STREET PARKING)

STANDARDS AND GUIDELINES DETAILS

SHEET 1

SCALE	PAPER
1:150	A4
DRAWING No.	REV
RD6.2A	D

P:\CAD\R&SD\ITI_01 Design\T_1000B Standards\T_1000RS DESIGN_Roads and Stormwater\0002 Drawings_Version4.0\01 RD\RD6.2A – Typical Section Class 3 Road (32–40m RR)_RevD.dwg

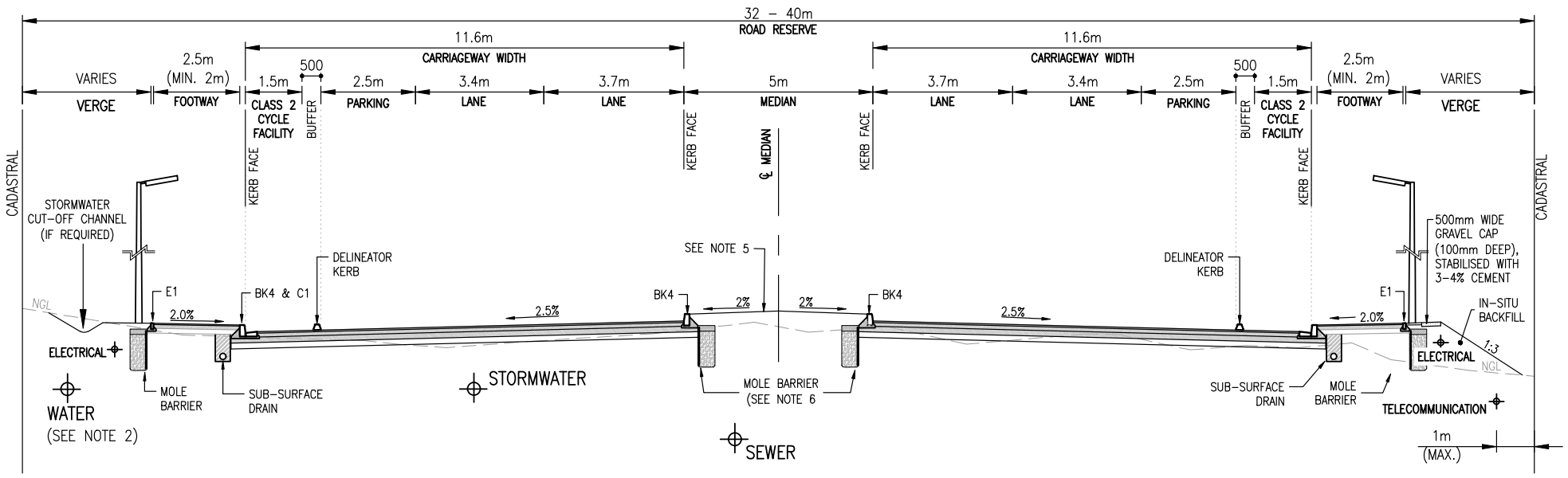

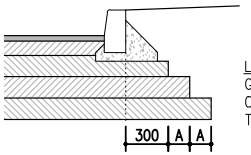

LATERAL STEP (A):
GREATER OF 150mm
OR THICKNESS OF
THE LAYER ABOVE

LAYER STEP DETAIL
(NO SUB–SURFACE DRAIN PRESENT)

NOTES:

1. DIMENSIONS IN mm, UNLESS STATED/ANNOTATED OTHERWISE.
2. POSITION OF WATERMAIN DEPENDS UPON VERGE WIDTH AND SIZE OF WATERMAIN.
3. STREET LIGHT POLES (AND OTHER STREET FURNITURE) MUST BE PLACED TO ALWAYS LEAVE A MINIMUM 1.1m LATERAL CLEARANCE SPACE ON FOOTWAYS.
4. PAVEMENT LAYERS SHALL BE DESIGNED AS PER CHAPTER 8.
5. MEDIAN ISLAND TREATMENT AS PER APPROVAL AUTHORITY'S REQUIREMENTS.
6. IF THE MEDIAN IS SURFACED, THEN MOLE BARRIERS IN THE MEDIAN WILL NOT BE REQUIRED.
7. POSITION OF UNDERGROUND STORMWATER AND SEWER SERVICES TO BE DISCUSSED WITH APPROVAL AUTHORITY. NO MANHOLES ALLOWED IN VEHICLE WHEEL TRACKS.
8. NO OUTFALL CHANNELS ARE ALLOWED ON THE HIGH SIDE OF THE CARRIAGEWAY. IF CIRCUMSTANCES REQUIRE THE PROVISION OF A CHANNEL ON THE HIGH SIDE OF THE CARRIAGEWAY (e.g. DRAINAGE OR CONSTRUCTABILITY), IT SHALL BE INFALL CHANNELS. THE PROVISION OF THESE INFALL CHANNELS SHALL BE MOTIVATED AND DISCUSSED WITH THE APPROVAL AUTHORITY. IN SUCH INSTANCES, A STORMWATER SYSTEM SHALL BE PROVIDED TO ACCOMMODATED THE RUNOFF ON THE HIGH SIDE.
9. DRAWING TO BE READ IN CONJUNCTION WITH **SECTION 3.2.2.2**.

NGL: NATURAL GROUND LEVEL
FRL: FINISHED ROAD LEVEL
FSL: FINISHED SURFACE LEVEL

SHEET INDEX:

SHEET 1: SHOULDER ONLY (NO ON–STREET PARKING
SHEET 2: ON–STREET PARKING WITH CLASS 2 CYCLE FACILITY
SHEET 3: CLASS 2/3 CYCLE FACILITY (NO SHOULDER OR ON–STREET PARKING)

CITY OF CAPE TOWN
ISIXEKO SASEKAPA
STAD KAAPSTAD

CITY OF CAPE TOWN
URBAN MOBILITY

TITLE

TYPICAL ROAD CROSS SECTION
CLASS 3 MINOR ARTERIAL (40m ROAD RESERVE)
ON-STREET PARKING WITH CLASS 2 CYCLE FACILITY

STANDARDS AND GUIDELINES DETAILS

SHEET 2

SCALE	PAPER
N.T.S.	A4
DRAWING No.	REV
RD6.2B	D

P:\CAD\R&SD\ITI_01 Design\T_1000B Standards\T_1000RS DESIGN_Roads and Stormwater\0002 Drawings_Version4.0\01 RD\RD6.2B – Typical Section Class 3 Road (32–40m RR)_RevD.dwg

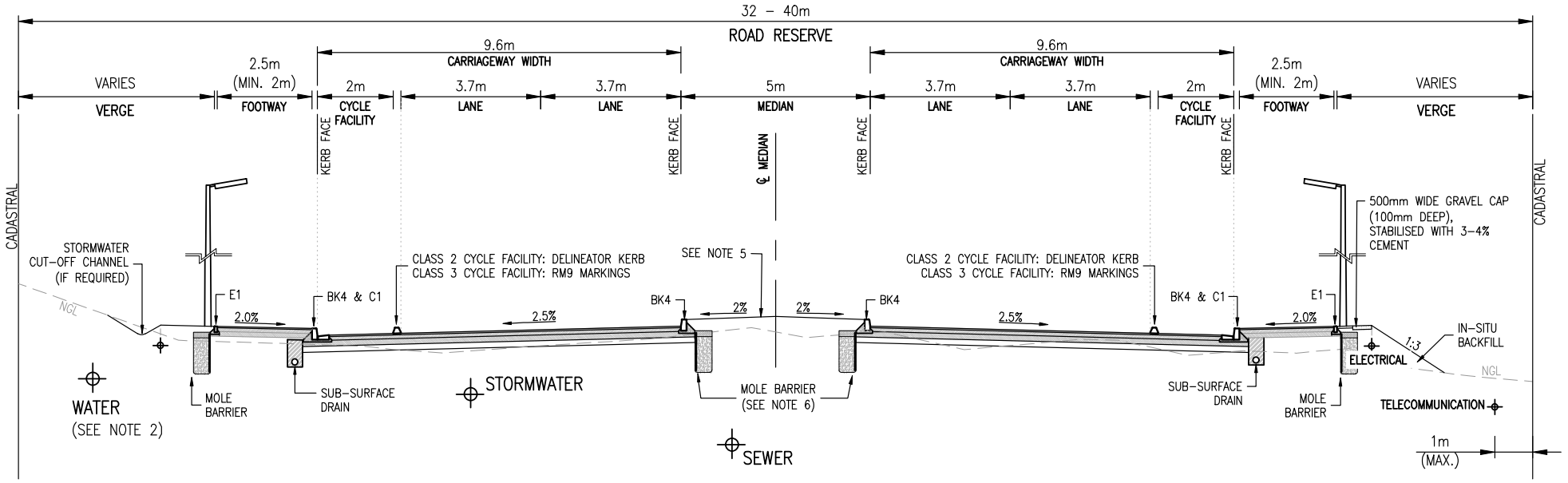

NOTES:

1. DIMENSIONS IN mm, UNLESS STATED/ANNOTATED OTHERWISE.
2. POSITION OF WATERMAIN DEPENDS UPON VERGE WIDTH AND SIZE OF WATERMAIN.
3. STREET LIGHT POLES (AND OTHER STREET FURNITURE) MUST BE PLACED TO ALWAYS LEAVE A MINIMUM 1.1m LATERAL CLEARANCE SPACE ON FOOTWAYS.
4. PAVEMENT LAYERS SHALL BE DESIGNED AS PER CHAPTER 8.
5. MEDIAN ISLAND TREATMENT AS PER APPROVAL AUTHORITY'S REQUIREMENTS.
6. IF THE MEDIAN IS SURFACED, THEN MOLE BARRIERS IN THE MEDIAN WILL NOT BE REQUIRED.
7. POSITION OF UNDERGROUND STORMWATER AND SEWER SERVICES TO BE DISCUSSED WITH APPROVAL AUTHORITY. NO MANHOLES ALLOWED IN VEHICLE WHEEL TRACKS.
8. NO OUTFALL CHANNELS ARE ALLOWED ON THE HIGH SIDE OF THE CARRIAGEWAY. IF CIRCUMSTANCES REQUIRE THE PROVISION OF A CHANNEL ON THE HIGH SIDE OF THE CARRIAGEWAY (e.g. DRAINAGE OR CONSTRUCTABILITY), IT SHALL BE INFALL CHANNELS. THE PROVISION OF THESE INFALL CHANNELS SHALL BE MOTIVATED AND DISCUSSED WITH THE APPROVAL AUTHORITY. IN SUCH INSTANCES, A STORMWATER SYSTEM SHALL BE PROVIDED TO ACCOMMODATED THE RUNOFF ON THE HIGH SIDE.
9. DRAWING TO BE READ IN CONJUNCTION WITH **SECTION 3.2.2.2**.

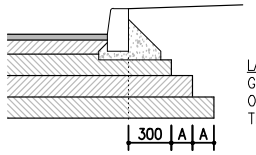

LATERAL STEP (A):
GREATER OF 150mm OR THICKNESS OF THE LAYER ABOVE

LAYER STEP DETAIL
(NO SUB–SURFACE DRAIN PRESENT)

NGL: NATURAL GROUND LEVEL
FRL: FINISHED ROAD LEVEL
FSL: FINISHED SURFACE LEVEL

SHEET INDEX:

SHEET 1: SHOULDER ONLY (NO ON–STREET PARKING
SHEET 2: ON–STREET PARKING WITH CLASS 2 CYCLE FACILITY
SHEET 3: CLASS 2/3 CYCLE FACILITY (NO SHOULDER OR ON–STREET PARKING)

CITY OF CAPE TOWN
ISIXEKO SASEKAPA
STAD KAAPSTAD

CITY OF CAPE TOWN
URBAN MOBILITY

TITLE

TYPICAL ROAD CROSS SECTION
CLASS 3 MINOR ARTERIAL (40m ROAD RESERVE)
CLASS 2/3 CYCLE FACILITY (NO SHOULDER OR ON-STREET PARKING)

STANDARDS AND GUIDELINES DETAILS

SHEET 3

SCALE	PAPER
1:150	A4
DRAWING No.	REV
RD6.2C	A

P:\CAD\R&SD\ITI_01 Design\T_1000B Standards\T_1000RS DESIGN_Roads and Stormwater\0002 Drawings_Version4.0\01 RD\RD6.2C – Typical Section Class 3 Road (32–40m RR)_RevA.dwg

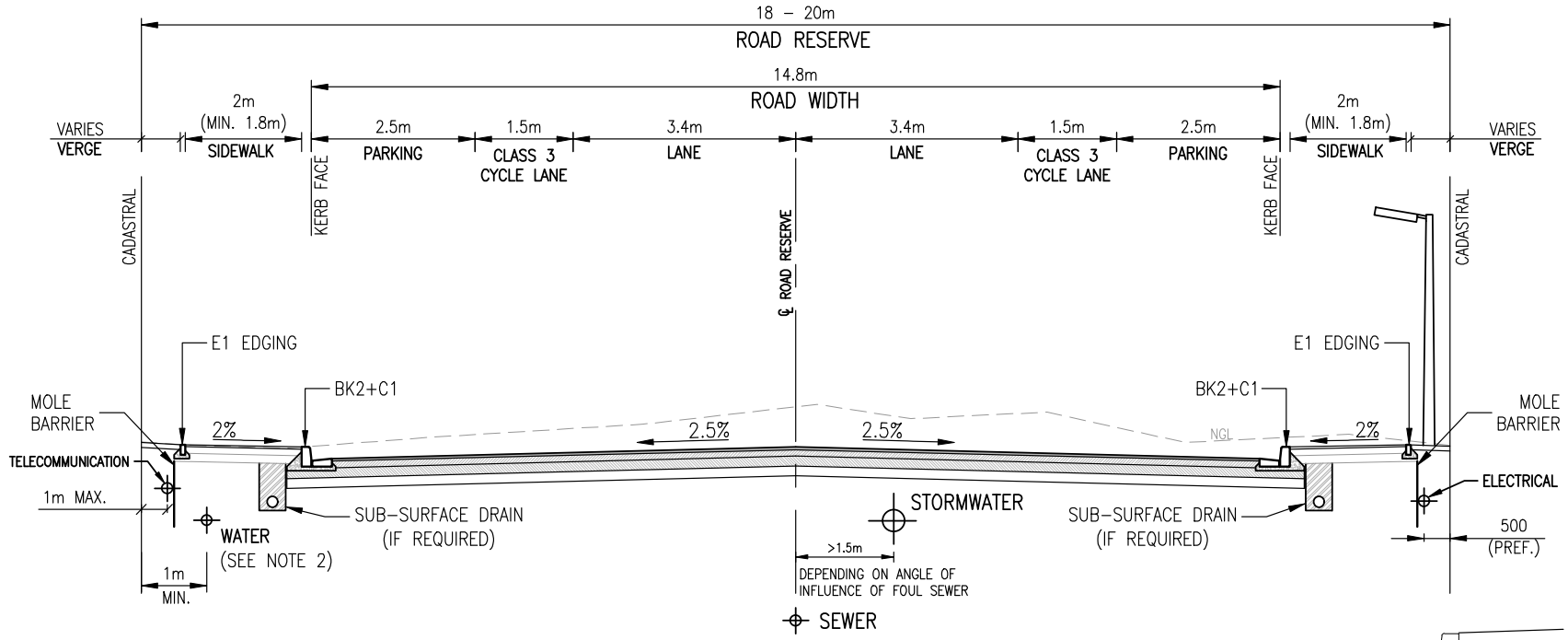

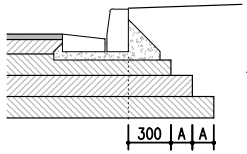

LATERAL STEP (A):
GREATER OF 150mm
OR THICKNESS OF
THE LAYER ABOVE

LAYER STEP DETAIL
(NO SUB–SURFACE DRAIN PRESENT)

NOTES:

1. DIMENSIONS IN mm, UNLESS STATED/ANNOTATED OTHERWISE.
2. POSITION OF WATERMAIN DEPENDS UPON VERGE WIDTH AND SIZE OF WATERMAIN.
3. STREET LIGHT POLES (AND OTHER STREET FURNITURE) MUST BE PLACED TO ALWAYS LEAVE A MINIMUM 1.1m LATERAL CLEARANCE SPACE ON FOOTWAYS.
4. PAVEMENT LAYERS SHALL BE DESIGNED AS PER CHAPTER 8.
5. DRAWING TO BE READ IN CONJUNCTION WITH **SECTION 3.2.2.3.**

NGL: NATURAL GROUND LEVEL
FRL: FINISHED ROAD LEVEL
FSL: FINISHED SURFACE LEVEL

SHEET INDEX:

SHEET 1: CLASS 3 CYCLE FACILITY WITH ON–STREET PARKING (PARKING SLOPES AWAY FROM ROAD)
SHEET 2: CLASS 3 CYCLE FACILITY WITH ON–STREET PARKING (PARKING SLOPES TOWARDS ROAD)
SHEET 3: CLASS 3 CYCLE FACILITY (NO ON–STREET PARKING)
SHEET 4: NO CYCLE FACILITY OR ON–STREET PARKING
SHEET 5: CLASS 2 CYCLE FACILITY WITH ON–STREET PARKING

CITY OF CAPE TOWN
ISIXEKO SASEKAPA
STAD KAAPSTAD

CITY OF CAPE TOWN
URBAN MOBILITY

TITLE

TYPICAL ROAD CROSS SECTION
CLASS 4 COLLECTOR (20m/18m ROAD RESERVE)
CLASS 3 CYCLE LANE WITH ON-STREET PARKING

STANDARDS AND GUIDELINES DETAILS

SHEET 1

SCALE	PAPER
1:100	A4
DRAWING No.	REV
RD6.3A	D

P:\CAD\R&SD\ITI_01 Design\T_1000B Standards\T_1000RS DESIGN_Roads and Stormwater\0002 Drawings_Version4.0\01 RD\RD6.3A – Typical Section Class 4 Road (18–20m RR)_RevD.dwg

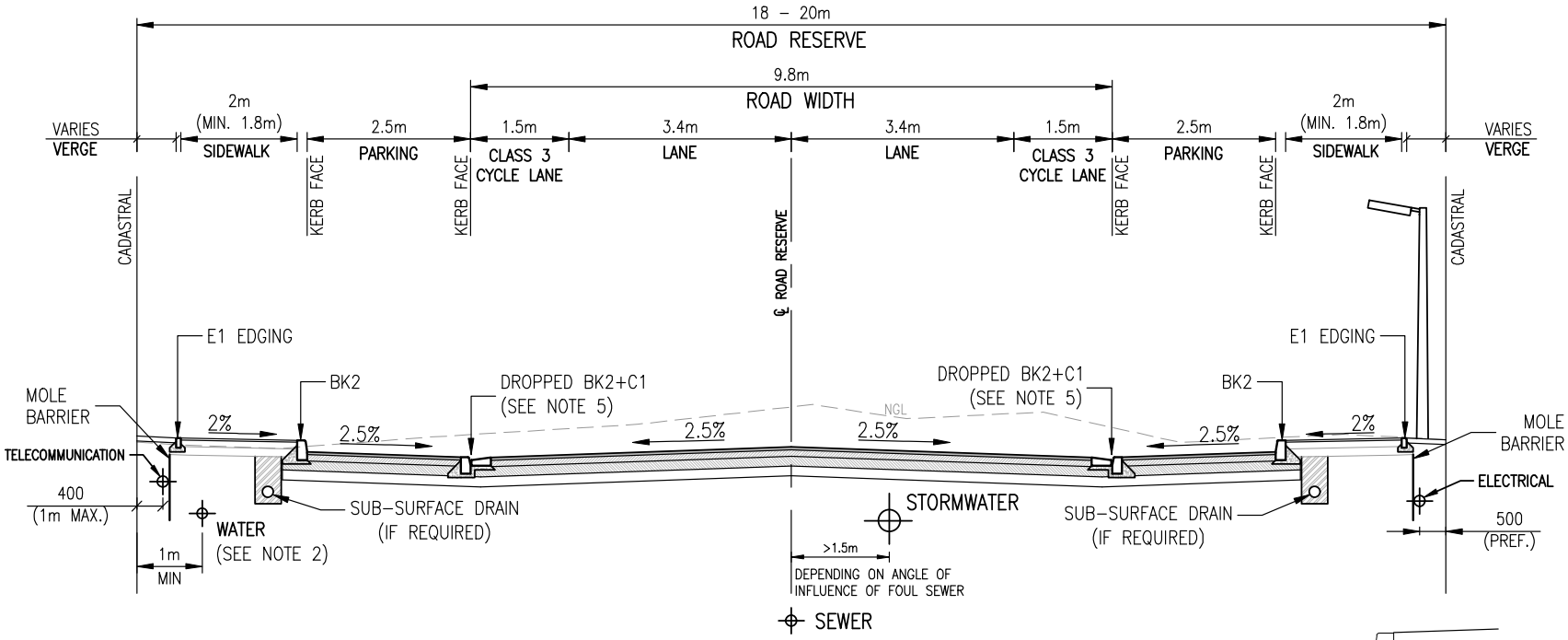

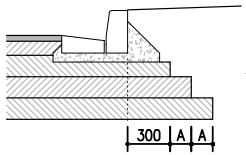

LATERAL STEP (A):
GREATER OF 150mm
OR THICKNESS OF
THE LAYER ABOVE

LAYER STEP DETAIL
(NO SUB–SURFACE DRAIN PRESENT)

NOTES:

1. DIMENSIONS IN mm, UNLESS STATED/ANNOTATED OTHERWISE.
2. POSITION OF WATERMAIN DEPENDS UPON VERGE WIDTH AND SIZE OF WATERMAIN.
3. STREET LIGHT POLES (AND OTHER STREET FURNITURE) MUST BE PLACED TO ALWAYS LEAVE A MINIMUM 1.1m LATERAL CLEARANCE SPACE ON FOOTWAYS.
4. PAVEMENT LAYERS SHALL BE DESIGNED AS PER CHAPTER 8.
5. REFER TO DRAWING RD2.1 FOR DETAILS ON THE DROPPED KERB AND CHANNEL (TYPE 'A').
6. DRAWING TO BE READ IN CONJUNCTION WITH **SECTION 3.2.2.3**.

NGL: NATURAL GROUND LEVEL
FRL: FINISHED ROAD LEVEL
FSL: FINISHED SURFACE LEVEL

SHEET INDEX:

SHEET 1: CLASS 3 CYCLE FACILITY WITH ON–STREET PARKING (PARKING SLOPES AWAY FROM ROAD)
SHEET 2: CLASS 3 CYCLE FACILITY WITH ON–STREET PARKING (PARKING SLOPES TOWARDS ROAD)
SHEET 3: CLASS 3 CYCLE FACILITY (NO ON–STREET PARKING)
SHEET 4: NO CYCLE FACILITY OR ON–STREET PARKING
SHEET 5: CLASS 2 CYCLE FACILITY WITH ON–STREET PARKING

CITY OF CAPE TOWN
ISIXEKO SASEKAPA
STAD KAAPSTAD

CITY OF CAPE TOWN
URBAN MOBILITY

TITLE

TYPICAL ROAD CROSS SECTION
CLASS 4 COLLECTOR (20/18m ROAD RESERVE)
CLASS 3 CYCLE LANE WITH ON-STREET PARKING

STANDARDS AND GUIDELINES DETAILS

SHEET 2

SCALE	PAPER
1:100	A4
DRAWING No.	REV
RD6.3B	D

P:\CAD\R&SD\ITI_01 Design\T_1000B Standards\T_1000RS DESIGN_Roads and Stormwater\0002 Drawings_Version4.0\01 RD\RD6.3B – Typical Section Class 4 Road (18–20m RR)_RevD.dwg

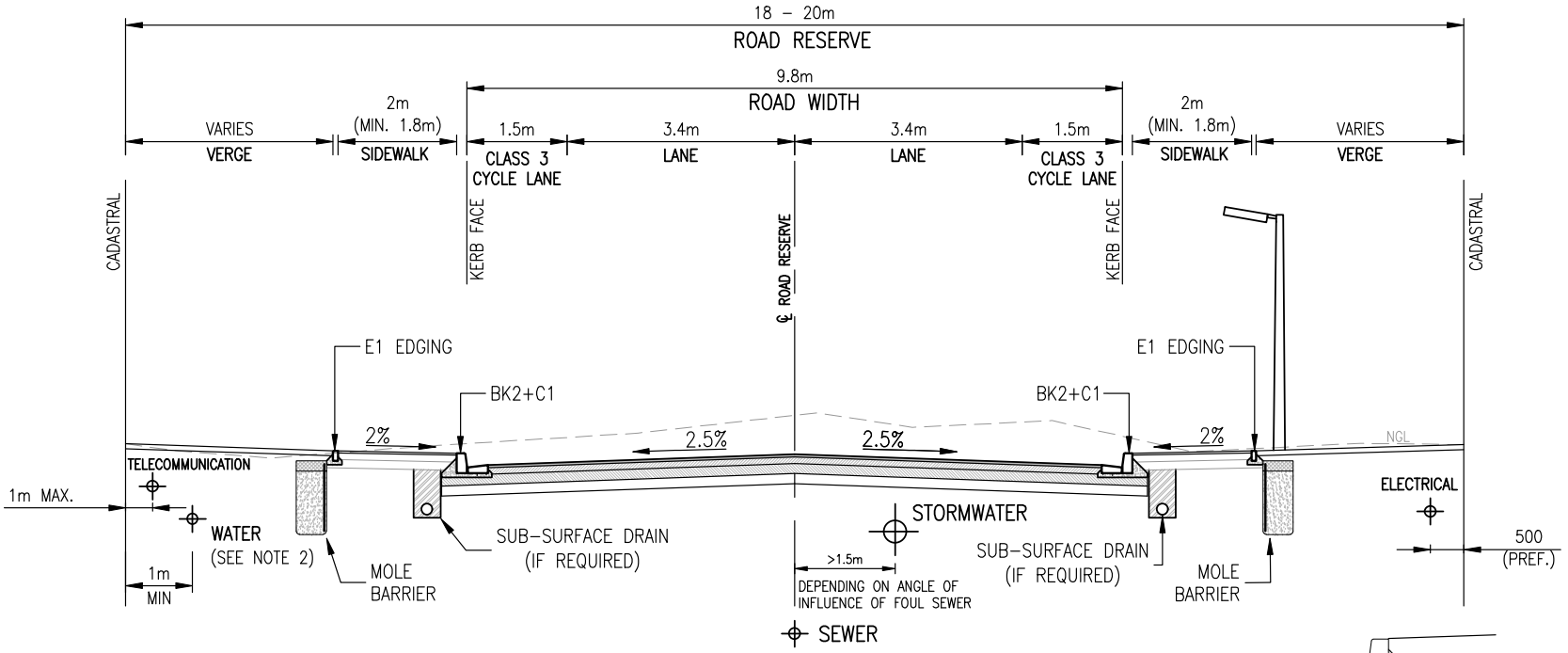

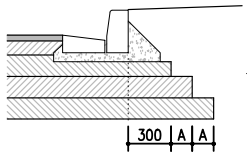

LATERAL STEP (A):
GREATER OF 150mm
OR THICKNESS OF
THE LAYER ABOVE

LAYER STEP DETAIL
(NO SUB–SURFACE DRAIN PRESENT)

NOTES:

1. DIMENSIONS IN mm, UNLESS STATED/ANNOTATED OTHERWISE.
2. POSITION OF WATERMAIN DEPENDS UPON VERGE WIDTH AND SIZE OF WATERMAIN.
3. STREET LIGHT POLES (AND OTHER STREET FURNITURE) MUST BE PLACED TO ALWAYS LEAVE A MINIMUM 1.1m LATERAL CLEARANCE SPACE ON FOOTWAYS.
4. PAVEMENT LAYERS SHALL BE DESIGNED AS PER CHAPTER 8.
5. DRAWING TO BE READ IN CONJUNCTION WITH **SECTION 3.2.2.3.**

NGL: NATURAL GROUND LEVEL
FRL: FINISHED ROAD LEVEL
FSL: FINISHED SURFACE LEVEL

SHEET INDEX:

SHEET 1: CLASS 3 CYCLE FACILITY WITH ON–STREET PARKING (PARKING SLOPES AWAY FROM ROAD)
SHEET 2: CLASS 3 CYCLE FACILITY WITH ON–STREET PARKING (PARKING SLOPES TOWARDS ROAD)
SHEET 3: CLASS 3 CYCLE FACILITY (NO ON–STREET PARKING)
SHEET 4: NO CYCLE FACILITY OR ON–STREET PARKING
SHEET 5: CLASS 2 CYCLE FACILITY WITH ON–STREET PARKING

CITY OF CAPE TOWN
ISIXEKO SASEKAPA
STAD KAAPSTAD

CITY OF CAPE TOWN
URBAN MOBILITY

TITLE

TYPICAL ROAD CROSS SECTION
CLASS 4 COLLECTOR (20/18m ROAD RESERVE)
CLASS 3 CYCLE LANE WITHOUT ON-STREET PARKING

STANDARDS AND GUIDELINES DETAILS

SHEET 3

SCALE	PAPER
1:100	A4
DRAWING No.	REV
RD6.3C	D

P:\CAD\R&SD\ITI_01 Design\T_1000B Standards\T_1000RS DESIGN_Roads and Stormwater\0002 Drawings_Version4.0\01 RD\RD6.3C – Typical Section Class 4 Road (18–20m RR)_RevD.dwg

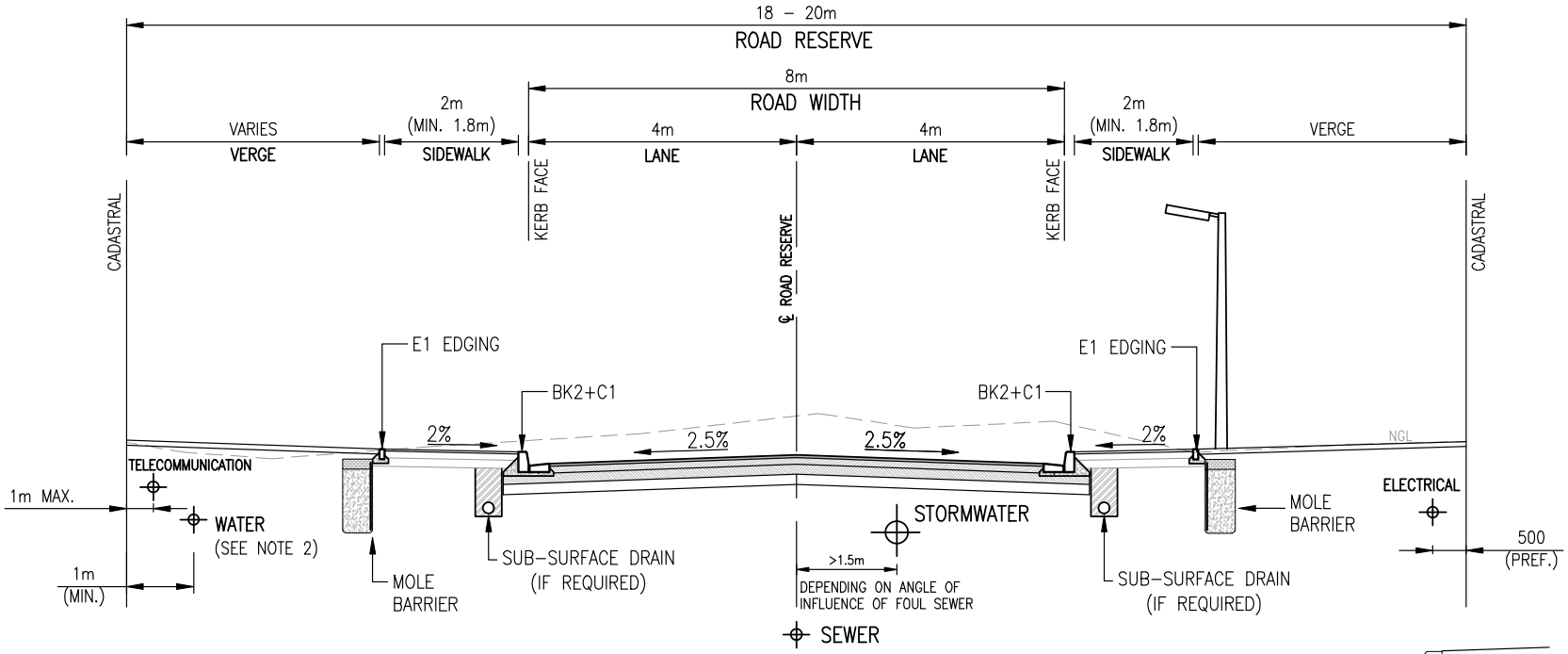

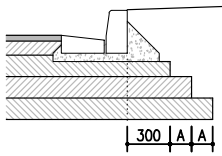

LATERAL STEP (A):
GREATER OF 150mm
OR THICKNESS OF
THE LAYER ABOVE

LAYER STEP DETAIL
(NO SUB–SURFACE DRAIN PRESENT)

NOTES:

1. DIMENSIONS IN mm, UNLESS STATED/ANNOTATED OTHERWISE.
2. POSITION OF WATERMAIN DEPENDS UPON VERGE WIDTH AND SIZE OF WATERMAIN.
3. STREET LIGHT POLES (AND OTHER STREET FURNITURE) MUST BE PLACED TO ALWAYS LEAVE A MINIMUM 1.1m LATERAL CLEARANCE SPACE ON FOOTWAYS.
4. PAVEMENT LAYERS SHALL BE DESIGNED AS PER CHAPTER 8.
5. DRAWING TO BE READ IN CONJUNCTION WITH **SECTION 3.2.2.3.**

NGL: NATURAL GROUND LEVEL
FRL: FINISHED ROAD LEVEL
FSL: FINISHED SURFACE LEVEL

SHEET INDEX:

SHEET 1: CLASS 3 CYCLE FACILITY WITH ON–STREET PARKING (PARKING SLOPES AWAY FROM ROAD)
SHEET 2: CLASS 3 CYCLE FACILITY WITH ON–STREET PARKING (PARKING SLOPES TOWARDS ROAD)
SHEET 3: CLASS 3 CYCLE FACILITY (NO ON–STREET PARKING)
SHEET 4: NO CYCLE FACILITY OR ON–STREET PARKING
SHEET 5: CLASS 2 CYCLE FACILITY WITH ON–STREET PARKING

CITY OF CAPE TOWN
ISIXEKO SASEKAPA
STAD KAAPSTAD

CITY OF CAPE TOWN
URBAN MOBILITY

TITLE

TYPICAL ROAD CROSS SECTION
CLASS 4 COLLECTOR (20/18m ROAD RESERVE)
NO CYCLE FACILITY OR ON-STREET PARKING

STANDARDS AND GUIDELINES DETAILS

SHEET 4

SCALE	PAPER
1:100	A4
DRAWING No.	REV
RD6.3D	D

P:\CAD\R&SD\ITI_01 Design\T_1000B Standards\T_1000RS DESIGN_Roads and Stormwater\0002 Drawings_Version4.0\01 RD\RD6.3D – Typical Section Class 4 Road (18–20m RR)_RevD.dwg

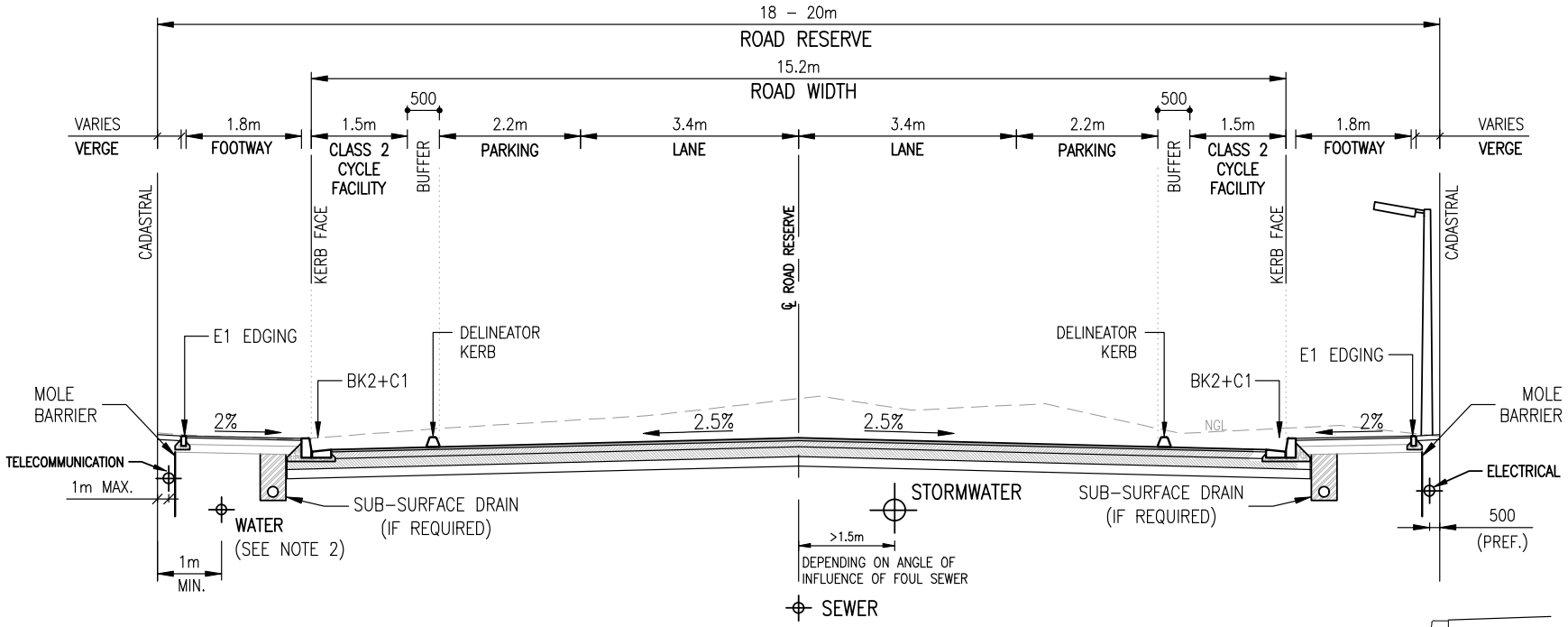

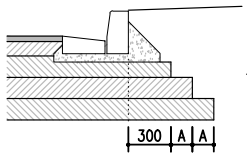

LATERAL STEP (A):
GREATER OF 150mm
OR THICKNESS OF
THE LAYER ABOVE

LAYER STEP DETAIL
(NO SUB–SURFACE DRAIN PRESENT)

NOTES:

1. DIMENSIONS IN mm, UNLESS STATED/ANNOTATED OTHERWISE.
2. POSITION OF WATERMAIN DEPENDS UPON VERGE WIDTH AND SIZE OF WATERMAIN.
3. STREET LIGHT POLES (AND OTHER STREET FURNITURE) MUST BE PLACED TO ALWAYS LEAVE A MINIMUM 1.1m LATERAL CLEARANCE SPACE ON FOOTWAYS.
4. PAVEMENT LAYERS SHALL BE DESIGNED AS PER CHAPTER 8.
5. DRAWING TO BE READ IN CONJUNCTION WITH **SECTION 3.2.2.3.**

NGL: NATURAL GROUND LEVEL
FRL: FINISHED ROAD LEVEL
FSL: FINISHED SURFACE LEVEL

SHEET INDEX:

SHEET 1: CLASS 3 CYCLE FACILITY WITH ON–STREET PARKING (PARKING SLOPES AWAY FROM ROAD)
SHEET 2: CLASS 3 CYCLE FACILITY WITH ON–STREET PARKING (PARKING SLOPES TOWARDS ROAD)
SHEET 3: CLASS 3 CYCLE FACILITY (NO ON–STREET PARKING)
SHEET 4: NO CYCLE FACILITY OR ON–STREET PARKING
SHEET 5: CLASS 2 CYCLE FACILITY WITH ON–STREET PARKING

CITY OF CAPE TOWN
ISIXEKO SASEKAPA
STAD KAAPSTAD

CITY OF CAPE TOWN
URBAN MOBILITY

TITLE

TYPICAL ROAD CROSS SECTION
CLASS 4 COLLECTOR (20m/18m ROAD RESERVE)
CLASS 2 CYCLE FACILITY WITH ON-STREET PARKING

STANDARDS AND GUIDELINES DETAILS

SHEET 5

SCALE	PAPER
1:100	A4
DRAWING No.	REV
RD6.3E	A

P:\CAD\R&SD\ITI_01 Design\T_1000B Standards\T_1000RS DESIGN_Roads and Stormwater\0002 Drawings_Version4.0\01 RD\RD6.3E – Typical Section Class 4 Road (18–20m RR)_RevA.dwg

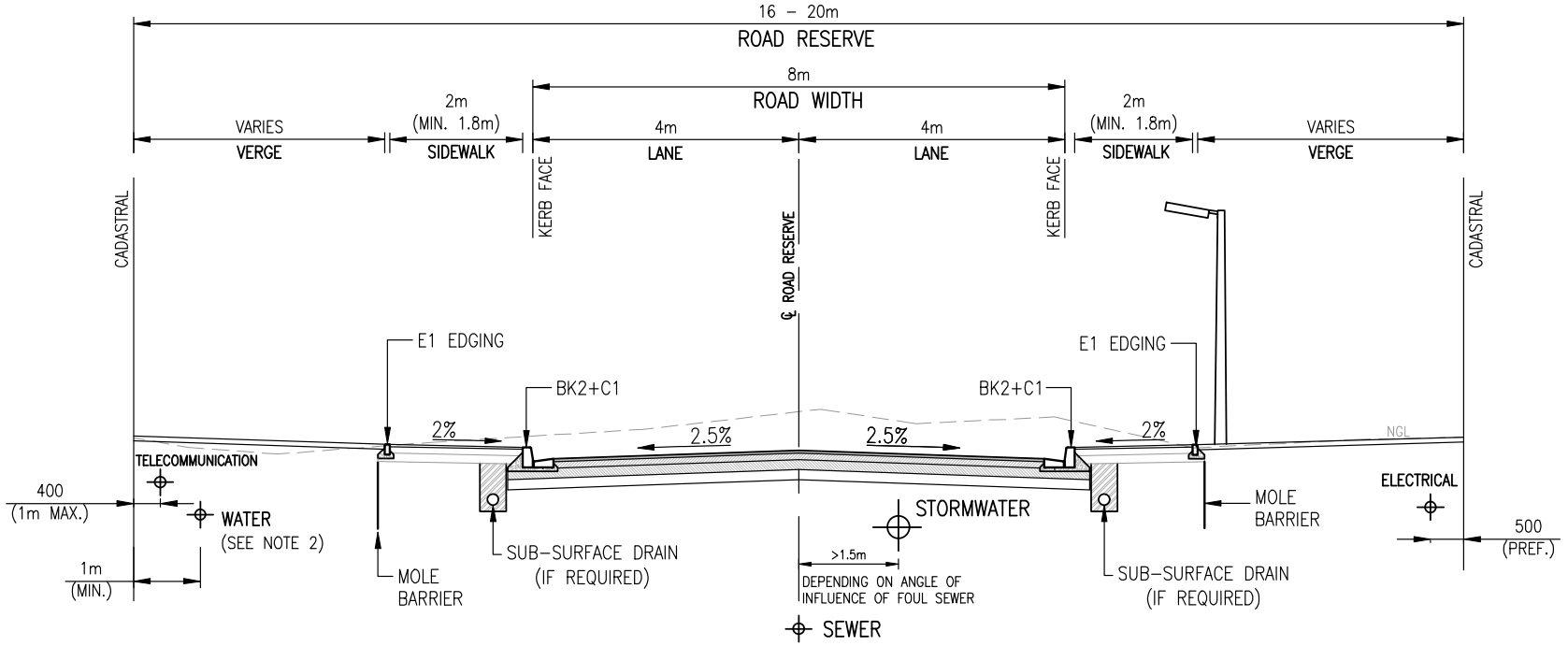

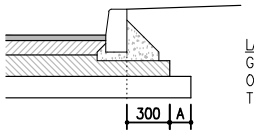

LATERAL STEP (A):
GREATER OF 150mm
OR THICKNESS OF
THE LAYER ABOVE

LAYER STEP DETAIL
(NO SUB-SURFACE DRAIN PRESENT)

NGL: NATURAL GROUND LEVEL
FRL: FINISHED ROAD LEVEL
FSL: FINISHED SURFACE LEVEL

NOTES:

1. DIMENSIONS IN mm, UNLESS STATED/ANNOTATED OTHERWISE.
2. POSITION OF WATERMAIN DEPENDS UPON VERGE WIDTH AND SIZE OF WATERMAIN.
3. STREET LIGHT POLES (AND OTHER STREET FURNITURE) MUST BE PLACED TO ALWAYS LEAVE A MINIMUM 1.1m LATERAL CLEARANCE SPACE ON FOOTWAYS.
4. PAVEMENT LAYERS SHALL BE DESIGNED AS PER CHAPTER 8.
5. DRAWING TO BE READ IN CONJUNCTION WITH **SECTION 3.2.2.4**.

SHEET INDEX:

SHEET 1: CLASS 5A LOCAL COMMERCIAL & INDUSTRIAL ROAD, ONE-LANE SINGLE CARRIAGEWAY
SHEET 2: CLASS 5A LOCAL COMMERCIAL & INDUSTRIAL ROAD, TWO-LANE SINGLE CARRIAGEWAY
SHEET 3: CLASS 5A LOCAL COMMERCIAL & INDUSTRIAL ROAD, TWO-LANE DUAL CARRIAGEWAY
SHEET 4: CLASS 5B LOCAL RESIDENTIAL ROAD, 12m ROAD RESERVE (CAMBERED) (PREFERRED)
SHEET 5: CLASS 5B LOCAL RESIDENTIAL ROAD, 12m ROAD RESERVE (CROSSFALL) (NOT PREFERRED)
SHEET 6: CLASS 5C LOCAL RESIDENTIAL ROAD, 10m ROAD RESERVE
SHEET 7: CLASS 5D LOCAL RESIDENTIAL ROAD, 8m ROAD RESERVE

CITY OF CAPE TOWN
ISIXEKO SASEKAPA
STAD KAAPSTAD

CITY OF CAPE TOWN
URBAN MOBILITY

TITLE

TYPICAL ROAD CROSS SECTION
CLASS 5A COMMERCIAL AND INDUSTRIAL ROAD
ONE-LANE SINGLE CARRIAGEWAY (16-20m ROAD RESERVE)

STANDARDS AND GUIDELINES DETAILS

SHEET 1

SCALE	PAPER
1:100	A4
DRAWING No.	REV
RD6.4A	D

P:\CAD\R&SD\ITI_01 Design\T_1000B Standards\T_1000RS DESIGN_Roads and Stormwater\0002 Drawings_Version4.0\01 RD\RD6.4A – Typical Section Class 5A Comm Ind Rd (16–20m RR)_RevD.dwg

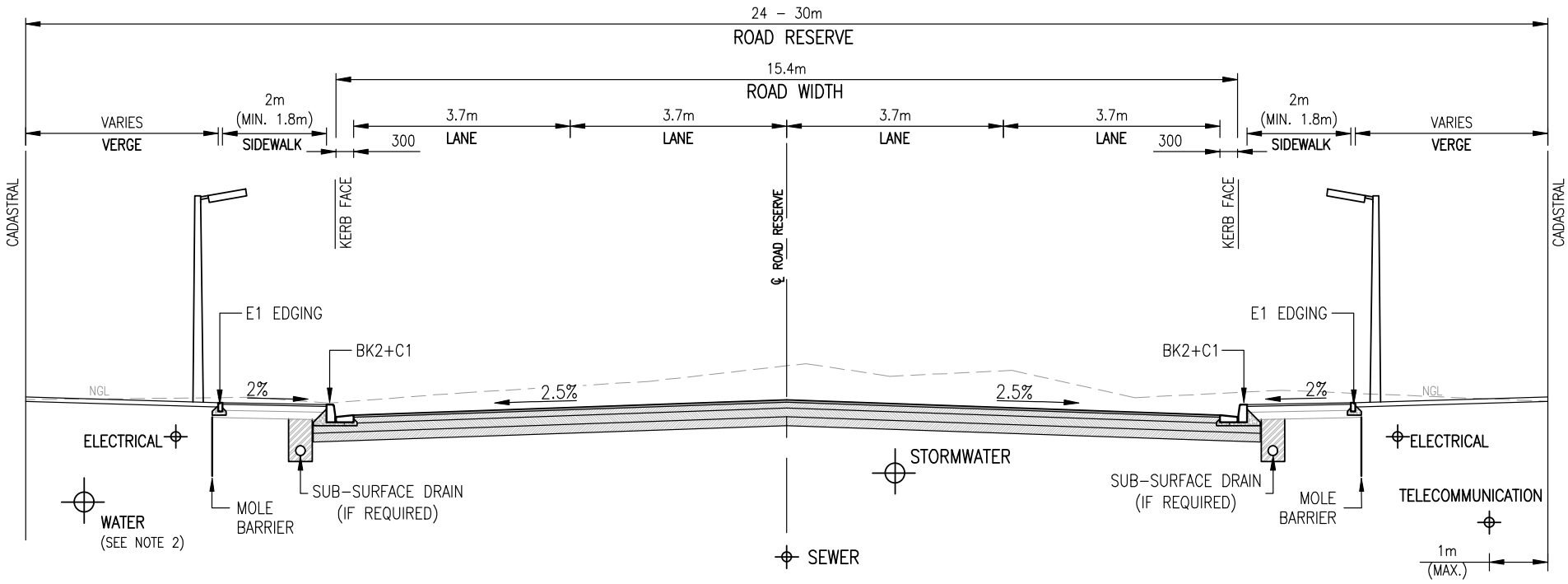

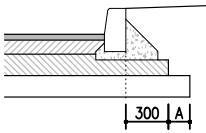

LATERAL STEP (A):
GREATER OF 150mm
OR THICKNESS OF
THE LAYER ABOVE

LAYER STEP DETAIL
(NO SUB–SURFACE DRAIN PRESENT)

NGL: NATURAL GROUND LEVEL
FRL: FINISHED ROAD LEVEL
FSL: FINISHED SURFACE LEVEL

NOTES:

1. DIMENSIONS IN mm, UNLESS STATED/ANNOTATED OTHERWISE.
2. POSITION OF WATERMAIN DEPENDS UPON VERGE WIDTH AND SIZE OF WATERMAIN.
3. STREET LIGHT POLES (AND OTHER STREET FURNITURE) MUST BE PLACED TO ALWAYS LEAVE A MINIMUM 1.1m LATERAL CLEARANCE SPACE ON FOOTWAYS.
4. PAVEMENT LAYERS SHALL BE DESIGNED AS PER CHAPTER 8.
5. POSITION OF UNDERGROUND STORMWATER AND SEWER SERVICES TO BE DISCUSSED WITH APPROVAL AUTHORITY. NO MANHOLES ALLOWED IN VEHICLE WHEEL TRACKS.
6. TYPICAL LANE WIDTHS ARE GIVEN. FINAL LANE WIDTHS TO BE AGREED WITH APPROVAL AUTHORITY.
7. DRAWING TO BE READ IN CONJUNCTION WITH **SECTION 3.2.2.4.**

SHEET INDEX:

SHEET 1: CLASS 5A LOCAL COMMERCIAL & INDUSTRIAL ROAD, ONE–LANE SINGLE CARRIAGEWAY
SHEET 2: CLASS 5A LOCAL COMMERCIAL & INDUSTRIAL ROAD, TWO–LANE SINGLE CARRIAGEWAY
SHEET 3: CLASS 5A LOCAL COMMERCIAL & INDUSTRIAL ROAD, TWO–LANE DUAL CARRIAGEWAY
SHEET 4: CLASS 5B LOCAL RESIDENTIAL ROAD, 12m ROAD RESERVE (CAMBERED) (PREFERRED)
SHEET 5: CLASS 5B LOCAL RESIDENTIAL ROAD, 12m ROAD RESERVE (CROSSFALL) (NOT PREFERRED)
SHEET 6: CLASS 5C LOCAL RESIDENTIAL ROAD, 10m ROAD RESERVE
SHEET 7: CLASS 5D LOCAL RESIDENTIAL ROAD, 8m ROAD RESERVE

CITY OF CAPE TOWN
ISIXEKO SASEKAPA
STAD KAAPSTAD

CITY OF CAPE TOWN
URBAN MOBILITY

TITLE

TYPICAL ROAD CROSS SECTION
CLASS 5A COMMERCIAL AND INDUSTRIAL ROAD
TWO-LANE SINGLE CARRIAGEWAY (24-30m ROAD RESERVE)

STANDARDS AND GUIDELINES DETAILS

SHEET 2

SCALE	PAPER
1:100	A4
DRAWING No.	REV
RD6.4B	D

P:\CAD\R&SD\ITI_01 Design\T_1000B Standards\T_1000RS DESIGN_Roads and Stormwater\0002 Drawings_Version4.0\01 RD\RD6.4B – Typical Section Class 5A Comm Ind Rd (24–30m RR)_RevD.dwg

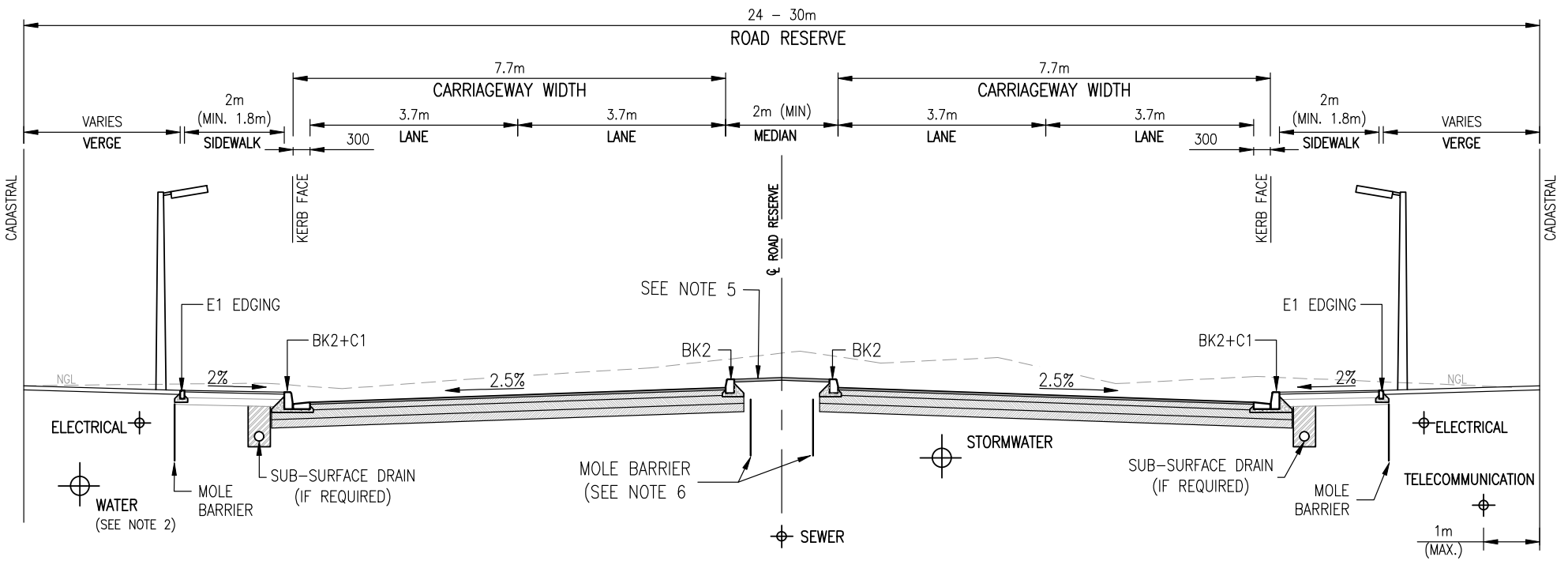

NOTES:

1. DIMENSIONS IN mm, UNLESS STATED/ANNOTATED OTHERWISE.
2. POSITION OF WATERMAIN DEPENDS UPON VERGE WIDTH AND SIZE OF WATERMAIN.
3. STREET LIGHT POLES (AND OTHER STREET FURNITURE) MUST BE PLACED TO ALWAYS LEAVE A MINIMUM 1.1m LATERAL CLEARANCE SPACE ON FOOTWAYS.
4. PAVEMENT LAYERS SHALL BE DESIGNED AS PER CHAPTER 8.
5. MEDIAN ISLAND TREATMENT AS PER APPROVAL AUTHORITY'S REQUIREMENTS.
6. IF THE MEDIAN IS SURFACED, THEN MOLE BARRIERS IN THE MEDIAN WILL NOT BE REQUIRED.
7. POSITION OF UNDERGROUND STORMWATER AND SEWER SERVICES TO BE DISCUSSED WITH APPROVAL AUTHORITY. NO MANHOLES ALLOWED IN VEHICLE WHEEL TRACKS.
8. NO OUTFALL CHANNELS ARE ALLOWED ON THE HIGH SIDE OF THE CARRIAGEWAY. IF CIRCUMSTANCES REQUIRE THE PROVISION OF A CHANNEL ON THE HIGH SIDE OF THE CARRIAGEWAY (e.g. DRAINAGE OR CONSTRUCTABILITY), IT SHALL BE INFALL CHANNELS. THE PROVISION OF THESE INFALL CHANNELS SHALL BE MOTIVATED AND DISCUSSED WITH THE APPROVAL AUTHORITY. IN SUCH INSTANCES, A STORMWATER SYSTEM SHALL BE PROVIDED TO ACCOMMODATED THE RUNOFF ON THE HIGH SIDE.
9. TYPICAL LANE WIDTHS ARE GIVEN. FINAL LANE WIDTHS TO BE AGREED WITH APPROVAL AUTHORITY.
10. DRAWING TO BE READ IN CONJUNCTION WITH **SECTION 3.2.2.4**.

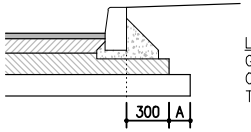

LATERAL STEP (A):
GREATER OF 150mm
OR THICKNESS OF
THE LAYER ABOVE

LAYER STEP DETAIL
(NO SUB–SURFACE DRAIN PRESENT)

NGL: NATURAL GROUND LEVEL
FRL: FINISHED ROAD LEVEL
FSL: FINISHED SURFACE LEVEL

SHEET INDEX:

SHEET 1: CLASS 5A LOCAL COMMERCIAL & INDUSTRIAL ROAD, ONE–LANE SINGLE CARRIAGEWAY
SHEET 2: CLASS 5A LOCAL COMMERCIAL & INDUSTRIAL ROAD, TWO–LANE SINGLE CARRIAGEWAY
SHEET 3: CLASS 5A LOCAL COMMERCIAL & INDUSTRIAL ROAD, TWO–LANE DUAL CARRIAGEWAY
SHEET 4: CLASS 5B LOCAL RESIDENTIAL ROAD, 12m ROAD RESERVE (CAMBERED) (PREFERRED)
SHEET 5: CLASS 5B LOCAL RESIDENTIAL ROAD, 12m ROAD RESERVE (CROSSFALL) (NOT PREFERRED)
SHEET 6: CLASS 5C LOCAL RESIDENTIAL ROAD, 10m ROAD RESERVE
SHEET 7: CLASS 5D LOCAL RESIDENTIAL ROAD, 8m ROAD RESERVE

CITY OF CAPE TOWN
ISIXEKO SASEKAPA
STAD KAAPSTAD

CITY OF CAPE TOWN
URBAN MOBILITY

TITLE

TYPICAL ROAD CROSS SECTION
CLASS 5A COMMERCIAL AND INDUSTRIAL ROAD
TWO-LANE DUAL CARRIAGEWAY (24-30m ROAD RESERVE)

STANDARDS AND GUIDELINES DETAILS

SHEET 3

SCALE	PAPER
1:100	A4
DRAWING No.	REV
RD6.4C	D

P:\CAD\R&SD\ITI_01 Design\T_1000B Standards\T_1000RS DESIGN_Roads and Stormwater\0002 Drawings_Version4.0\01 RD\RD6.4C – Typical Section Class 5A Comm Ind Rd (24–30m RR)_RevD.dwg

NOTE:

AD-HOC STREET FURNITURE AND INFRASTRUCTURE (SUCH AS ELECTRICAL KIOSKS, WATER METERS, FIRE HYDRANTS, ETC.) ARE NOT SHOWN. DESIGNERS TO STILL TAKE COGNISANCE OF THE EXISTENCE THEREOF IN THE ROAD RESERVE

VERGE TREATMENT

75mm STABILISED GRAVEL CAP (3-4% CEMENT BY MASS) ON 150mm COMPACTED IN-SITU SUBGRADE.
OR
ASPHALT SURFACING

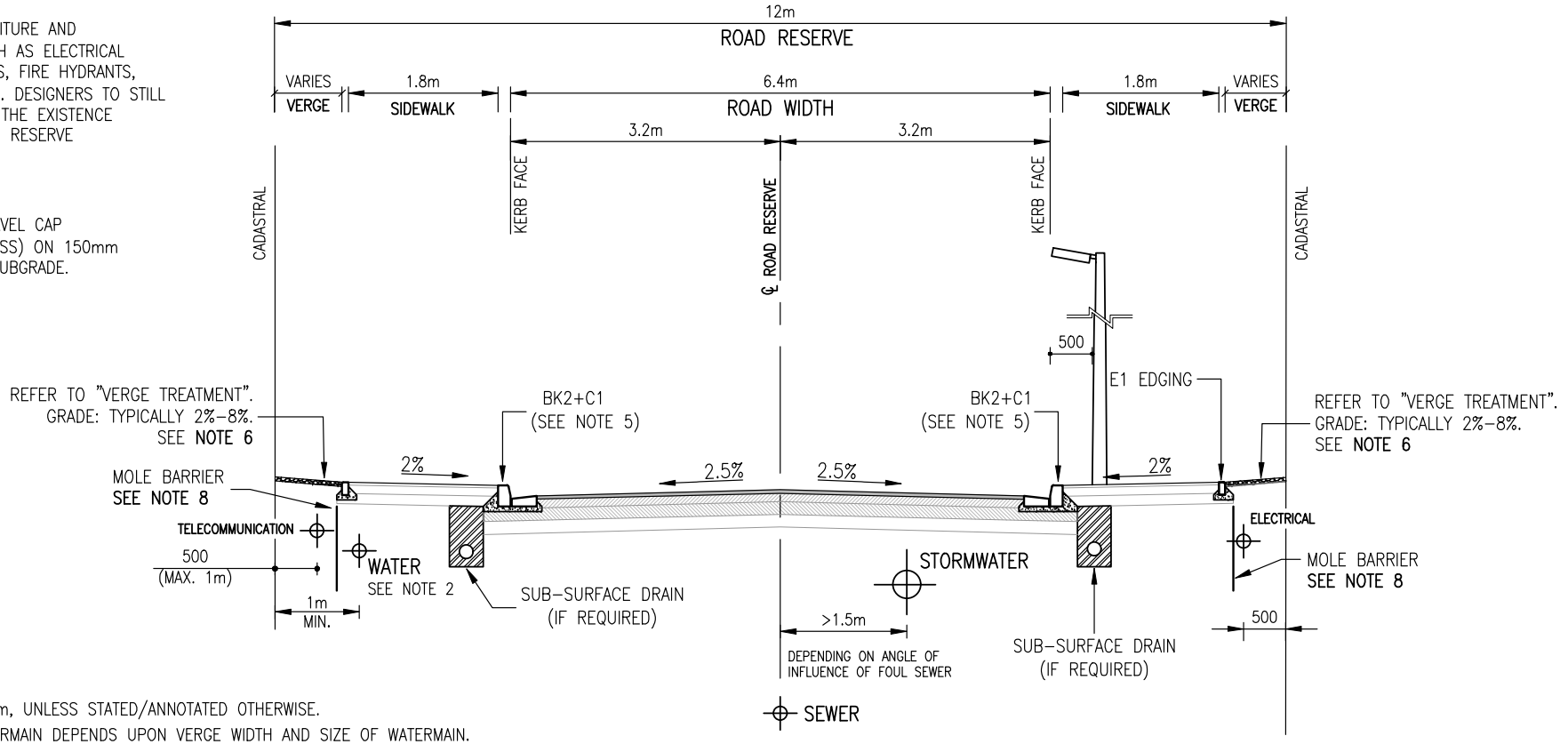

NOTES:

1. DIMENSIONS IN mm, UNLESS STATED/ANNOTATED OTHERWISE.
2. POSITION OF WATERMAIN DEPENDS UPON VERGE WIDTH AND SIZE OF WATERMAIN.
3. STREET LIGHT POLES (AND OTHER STREET FURNITURE) MUST BE PLACED TO ALWAYS LEAVE A MINIMUM 1.1m LATERAL CLEARANCE SPACE ON FOOTWAYS.
4. PAVEMENT LAYERS SHALL BE DESIGNED AS PER CHAPTER 8.
5. WHERE THE GENERAL ERF FRONTAGE IS LESS THAN 10m, THE USE OF MOUNTABLE KERBS MAY BE CONSIDERED.
6. THE ASPHALT SURFACING OF ROAD VERGES MAY BE REQUIRED BY THE APPROVAL AUTHORITY.
7. ALL RADII AT INTERSECTIONS MUST BE CONSTRUCTED WITH BARRIER KERBS.
8. WHERE THE ROAD IS SITUATED IN A SANDY AREA AND/OR WHERE THERE IS A HIGH RISK OF MOLE ACTIVITY, MOLE BARRIERS SHALL BE PROVIDED.
9. DRAWING TO BE READ IN CONJUNCTION WITH **SECTION 3.2.2.4.**

SHEET INDEX:

SHEET 1: CLASS 5A LOCAL COMMERCIAL & INDUSTRIAL ROAD, ONE-LANE SINGLE CARRIAGEWAY
SHEET 2: CLASS 5A LOCAL COMMERCIAL & INDUSTRIAL ROAD, TWO-LANE SINGLE CARRIAGEWAY
SHEET 3: CLASS 5A LOCAL COMMERCIAL & INDUSTRIAL ROAD, TWO-LANE DUAL CARRIAGEWAY
SHEET 4: CLASS 5B LOCAL RESIDENTIAL ROAD, 12m ROAD RESERVE (CAMBERED) (PREFERRED)
SHEET 5: CLASS 5B LOCAL RESIDENTIAL ROAD, 12m ROAD RESERVE (CROSSFALL) (NOT PREFERRED)
SHEET 6: CLASS 5C LOCAL RESIDENTIAL ROAD, 10m ROAD RESERVE
SHEET 7: CLASS 5D LOCAL RESIDENTIAL ROAD, 8m ROAD RESERVE

CITY OF CAPE TOWN
ISIXEKO SASEKAPA
STAD KAAPSTAD

CITY OF CAPE TOWN
URBAN MOBILITY

TITLE

TYPICAL ROAD CROSS SECTION
CLASS 5B LOCAL RESIDENTIAL STREET (CAMBERED) (12m ROAD RESERVE) (PREFERRED)

STANDARDS AND GUIDELINES DETAILS

SHEET 4

SCALE	PAPER
N.T.S.	A4
DRAWING No.	REV
RD6.4D	D

P:\CAD\R&SD\ITI_01 Design\T_1000B Standards\T_1000RS DESIGN_Roads and Stormwater\0002 Drawings_Version4.0\01 RD\RD6.4D – Typical Section Class 5B Res Road (cambered) 12m RR_RevD.dwg

NOTE:

AD-HOC STREET FURNITURE AND INFRASTRUCTURE (SUCH AS ELECTRICAL KIOSKS, WATER METERS, FIRE HYDRANTS, ETC.) ARE NOT SHOWN. DESIGNERS TO STILL TAKE COGNISANCE OF THE EXISTENCE THEREOF IN THE ROAD RESERVE

VERGE TREATMENT

(SEE **NOTE 6**)

75mm STABILISED GRAVEL CAP (3-4% CEMENT BY MASS) ON 150mm COMPACTED IN-SITU SUBGRADE.

OR

NORMAL TOPSOIL

OR

ASPHALT SURFACING

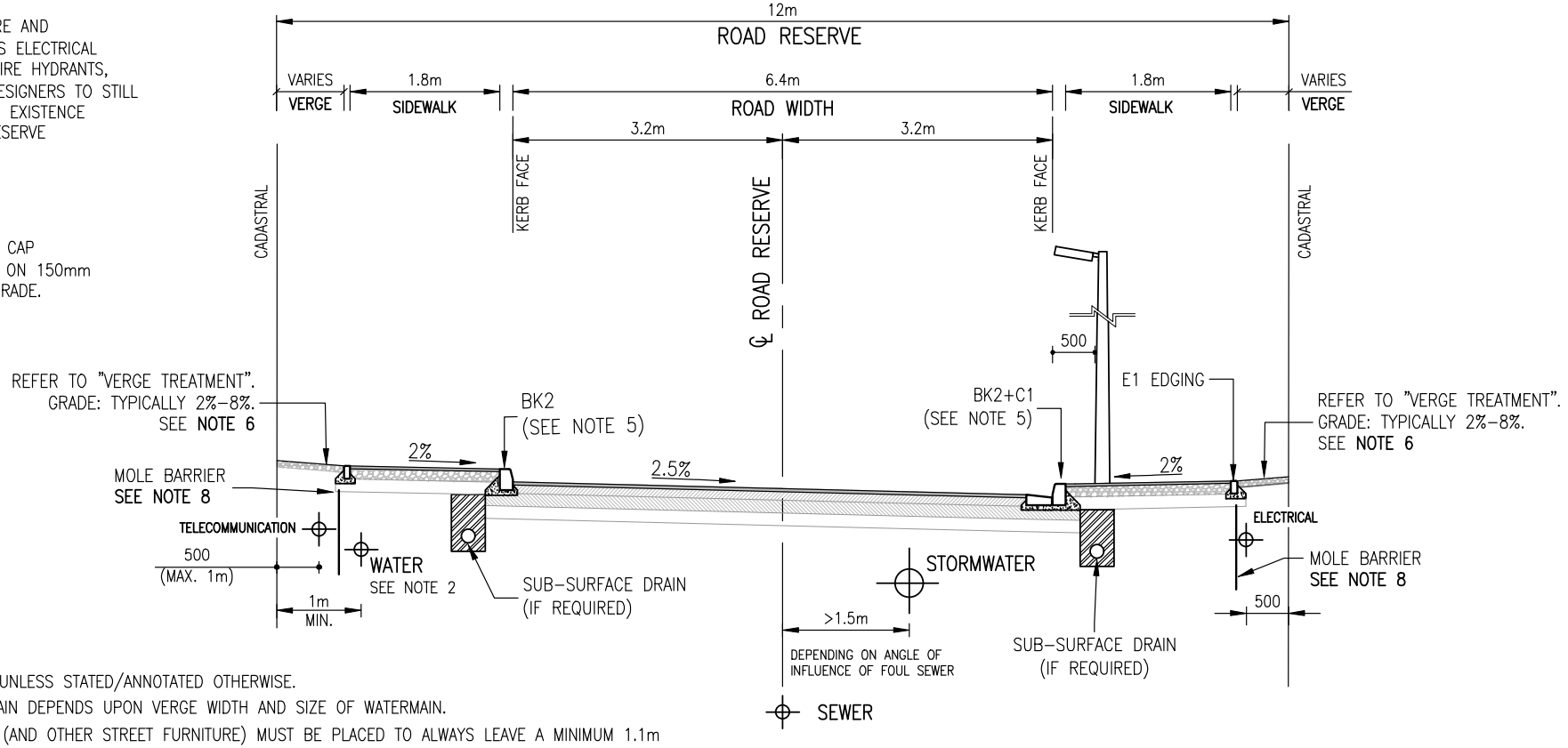

NOTES:

1. DIMENSIONS IN mm, UNLESS STATED/ANNOTATED OTHERWISE.
2. POSITION OF WATERMAIN DEPENDS UPON VERGE WIDTH AND SIZE OF WATERMAIN.
3. STREET LIGHT POLES (AND OTHER STREET FURNITURE) MUST BE PLACED TO ALWAYS LEAVE A MINIMUM 1.1m LATERAL CLEARANCE SPACE ON FOOTWAYS.
4. PAVEMENT LAYERS SHALL BE DESIGNED AS PER CHAPTER 8.
5. WHERE THE GENERAL ERF FRONTAGE IS LESS THAN 10m, THE USE OF MOUNTABLE KERBS MAY BE CONSIDERED.
6. THE VERGE TREATMENT REQUIREMENTS TO BE CONFIRMED WITH APPROVAL AUTHORITY.
7. ALL RADII AT INTERSECTIONS MUST BE CONSTRUCTED WITH BARRIER KERBS.
8. WHERE THE ROAD IS SITUATED IN A SANDY AREA AND/OR WHERE THERE IS A HIGH RISK OF MOLE ACTIVITY, MOLE BARRIERS SHALL BE PROVIDED.
9. NO OUTFALL CHANNELS ALLOWED.
10. DRAWING TO BE READ IN CONJUNCTION WITH **SECTION 3.2.2.4.**

SHEET INDEX:

SHEET 1: CLASS 5A LOCAL COMMERCIAL & INDUSTRIAL ROAD, ONE-LANE SINGLE CARRIAGEWAY
SHEET 2: CLASS 5A LOCAL COMMERCIAL & INDUSTRIAL ROAD, TWO-LANE SINGLE CARRIAGEWAY
SHEET 3: CLASS 5A LOCAL COMMERCIAL & INDUSTRIAL ROAD, TWO-LANE DUAL CARRIAGEWAY
SHEET 4: CLASS 5B LOCAL RESIDENTIAL ROAD, 12m ROAD RESERVE (CAMBERED) (PREFERRED)
SHEET 5: CLASS 5B LOCAL RESIDENTIAL ROAD, 12m ROAD RESERVE (CROSSFALL) (NOT PREFERRED)
SHEET 6: CLASS 5C LOCAL RESIDENTIAL ROAD, 10m ROAD RESERVE
SHEET 7: CLASS 5D LOCAL RESIDENTIAL ROAD, 8m ROAD RESERVE

CITY OF CAPE TOWN
ISIXEKO SASEKAPA
STAD KAAPSTAD

CITY OF CAPE TOWN
URBAN MOBILITY

TITLE

TYPICAL ROAD CROSS SECTION
CLASS 5B LOCAL RESIDENTIAL STREET (CROSSFALL) (12m ROAD RESERVE) (NOT PREFERRED)

STANDARDS AND GUIDELINES DETAILS

SHEET 5

SCALE	PAPER
N.T.S.	**A4**
DRAWING No.	REV
RD6.4E	**B**

NOTE:

AD-HOC STREET FURNITURE AND INFRASTRUCTURE (SUCH AS ELECTRICAL KIOSKS, WATER METERS, FIRE HYDRANTS, ETC.) ARE NOT SHOWN. DESIGNERS TO STILL TAKE COGNISANCE OF THE EXISTENCE THEREOF IN THE ROAD RESERVE

VERGE ALTERNATIVE

75mm STABILISED GRAVEL CAP (3-4% CEMENT BY MASS) ON 150mm COMPACTED IN-SITU SUBGRADE. SEE **NOTE 4**

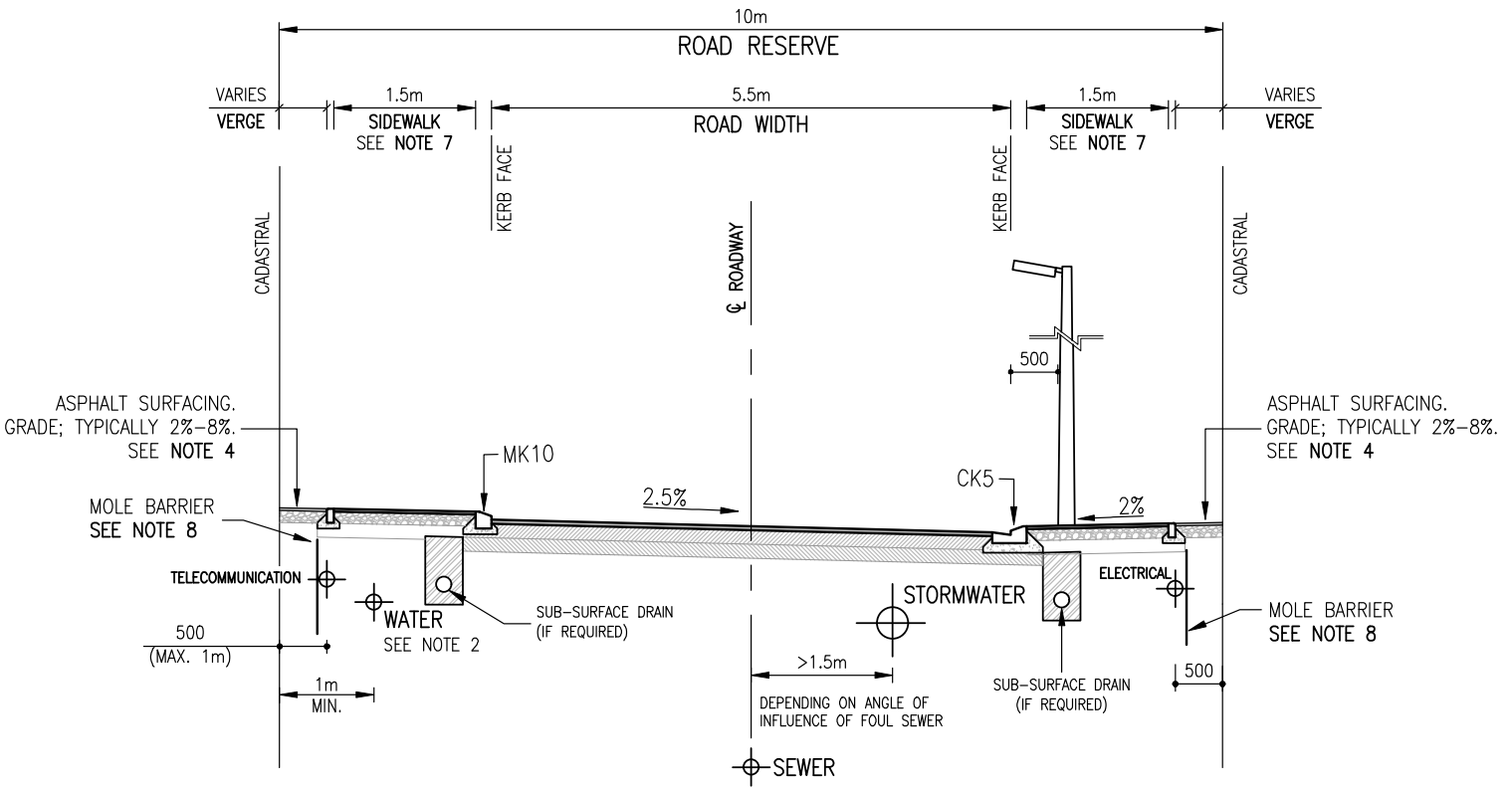

NOTES:

1. DIMENSIONS IN mm, UNLESS STATED/ANNOTATED OTHERWISE.
2. POSITION OF WATERMAIN DEPENDS UPON VERGE WIDTH AND SIZE OF WATERMAIN.
3. PAVEMENT LAYERS SHALL BE DESIGNED AS PER CHAPTER 8.
4. ROAD VERGES SHALL BE ASPHALT SURFACED, UNLESS REQUIRED OTHERWISE BY THE APPROVAL AUTHORITY.
5. ALL RADII AT INTERSECTIONS TO BE CONSTRUCTED WITH BARRIER KERBS.
6. STREET LIGHT POLES (AND OTHER STREET FURNITURE) MUST BE PLACED TO ALWAYS LEAVE A MINIMUM 1.1m LATERAL CLEARANCE SPACE ON FOOTWAYS.
7. SIDEWALKS SHALL BE PROVIDED ON BOTH SIDES OF THE ROADWAY. HOWEVER, WHERE THIS IS NOT POSSIBLE, AT LEAST ONE SIDEWALK SHALL BE PROVIDED.
8. WHERE THE ROAD IS SITUATED IN A SANDY AREA AND/OR WHERE THERE IS A HIGH RISK OF MOLE ACTIVITY, MOLE BARRIERS SHALL BE PROVIDED.
9. NO OUTFALL CHANNELS ALLOWED.
10. DRAWING TO BE READ IN CONJUNCTION WITH **SECTION 3.2.2.4.**

SHEET INDEX:

SHEET 1: CLASS 5A LOCAL COMMERCIAL & INDUSTRIAL ROAD, ONE-LANE SINGLE CARRIAGEWAY
SHEET 2: CLASS 5A LOCAL COMMERCIAL & INDUSTRIAL ROAD, TWO-LANE SINGLE CARRIAGEWAY
SHEET 3: CLASS 5A LOCAL COMMERCIAL & INDUSTRIAL ROAD, TWO-LANE DUAL CARRIAGEWAY
SHEET 4: CLASS 5B LOCAL RESIDENTIAL ROAD, 12m ROAD RESERVE (CAMBERED) (PREFERRED)
SHEET 5: CLASS 5B LOCAL RESIDENTIAL ROAD, 12m ROAD RESERVE (CROSSFALL) (NOT PREFERRED)
SHEET 6: CLASS 5C LOCAL RESIDENTIAL ROAD, 10m ROAD RESERVE
SHEET 7: CLASS 5D LOCAL RESIDENTIAL ROAD, 8m ROAD RESERVE

CITY OF CAPE TOWN
ISIXEKO SASEKAPA
STAD KAAPSTAD

CITY OF CAPE TOWN
URBAN MOBILITY

TITLE

TYPICAL ROAD CROSS SECTION
CLASS 5C LOCAL RESIDENTIAL STREET (10m ROAD RESERVE)

STANDARDS AND GUIDELINES DETAILS

SHEET 6

SCALE	PAPER
N.T.S.	A4
DRAWING No.	REV
RD6.4F	B

P:\CAD\R&SD\ITI_01 Design\T_1000B Standards\T_1000RS DESIGN_Roads and Stormwater\0002 Drawings_Version4.0\01 RD\RD6.4F - Typical Section Class 5C Res Road 10m RR_RevB.dwg

NOTE:

AD-HOC STREET FURNITURE AND INFRASTRUCTURE (SUCH AS ELECTRICAL KIOSKS, WATER METERS, FIRE HYDRANTS, ETC.) ARE NOT SHOWN. DESIGNERS TO STILL TAKE COGNISANCE OF THE EXISTENCE THEREOF IN THE ROAD RESERVE

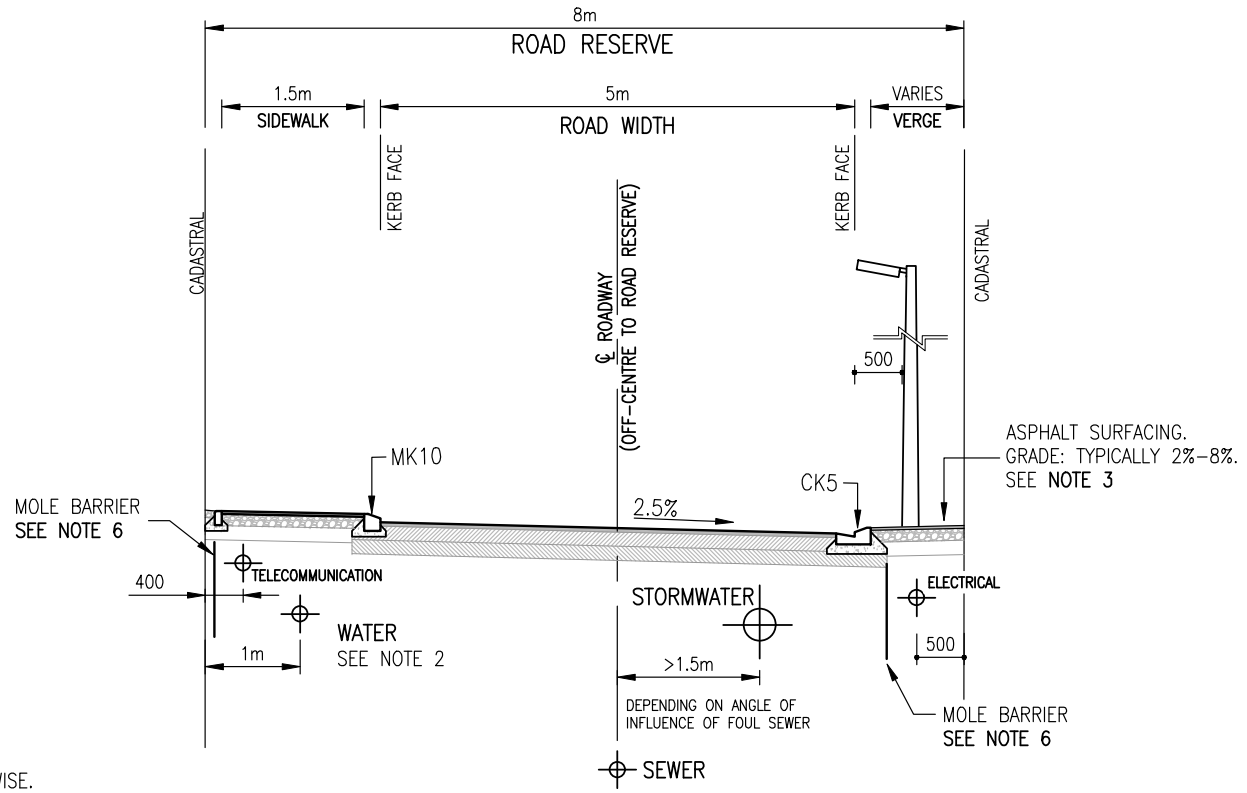

NOTES:

1. DIMENSIONS IN mm, UNLESS STATED/ANNOTATED OTHERWISE.
2. POSITION OF WATERMAIN DEPENDS UPON VERGE WIDTH AND SIZE OF WATERMAIN.
3. ROAD VERGES SHALL BE ASPHALT SURFACED, UNLESS REQUIRED OTHERWISE BY THE APPROVAL AUTHORITY.
4. PAVEMENT LAYERS SHALL BE DESIGNED AS PER CHAPTER 8.
5. ALL RADII AT INTERSECTIONS TO BE CONSTRUCTED WITH BARRIER KERBS.
6. WHERE THE ROAD IS SITUATED IN A SANDY AREA AND/OR WHERE THERE IS A HIGH RISK OF MOLE ACTIVITY, MOLE BARRIERS SHALL BE PROVIDED.
7. NO OUTFALL CHANNELS ALLOWED.
8. DRAWING TO BE READ IN CONJUNCTION WITH SECTION 3.2.2.4.
9. THE PROVISION OF CLASS 5D ROADS SHOULD ONLY BE FOR SPECIAL CIRCUMSTANCES AND MUST BE SUPPORTED BY THE APPROVAL AUTHORITY. IF SUPPORTED, ROADS SHALL BE LIMITED TO SHORT LENGTHS AND STRAIGHTS.

SHEET INDEX:

SHEET 1: CLASS 5A LOCAL COMMERCIAL & INDUSTRIAL ROAD, ONE-LANE SINGLE CARRIAGEWAY
SHEET 2: CLASS 5A LOCAL COMMERCIAL & INDUSTRIAL ROAD, TWO-LANE SINGLE CARRIAGEWAY
SHEET 3: CLASS 5A LOCAL COMMERCIAL & INDUSTRIAL ROAD, TWO-LANE DUAL CARRIAGEWAY
SHEET 4: CLASS 5B LOCAL RESIDENTIAL ROAD, 12m ROAD RESERVE (CAMBERED) (PREFERRED)
SHEET 5: CLASS 5B LOCAL RESIDENTIAL ROAD, 12m ROAD RESERVE (CROSSFALL) (NOT PREFERRED)
SHEET 6: CLASS 5C LOCAL RESIDENTIAL ROAD, 10m ROAD RESERVE
SHEET 7: CLASS 5D LOCAL RESIDENTIAL ROAD, 8m ROAD RESERVE

CITY OF CAPE TOWN
ISIXEKO SASEKAPA
STAD KAAPSTAD

CITY OF CAPE TOWN
URBAN MOBILITY

TITLE

TYPICAL ROAD CROSS SECTION
CLASS 5D LOCAL RESIDENTIAL STREET (8m ROAD RESERVE)

STANDARDS AND GUIDELINES DETAILS

SHEET 7

SCALE	PAPER
N.T.S.	A4
DRAWING No.	REV
RD6.4G	B

P:\CAD\R&SD\ITI_01 Design\T_1000B Standards\T_1000RS DESIGN_Roads and Stormwater\0002 Drawings_Version4.0\01 RD\RD6.4G – Typical Section Class 5D Res Road 8m RR_RevB.dwg

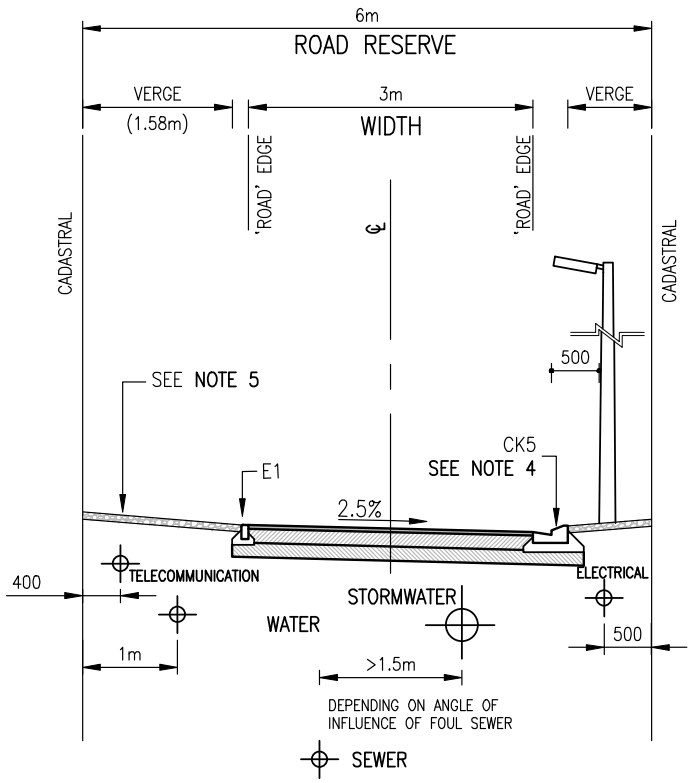

NOTES:

1. DIMENSIONS IN mm, UNLESS STATED/ANNOTATED OTHERWISE.
2. POSITION OF SERVICES IS INDICATED AS ANTICIPATED. THE FINAL POSITIONS TO BE DISCUSSED WITH SERVICE DEPARTMENTS.
3. PAVEMENT LAYERS SHALL BE DESIGNED AS PER CHAPTER 8.
4. PRECAST CONCRETE EDGINGS MAY ALSO BE USED AS EDGE RESTRAINTS WHERE THE ACCOMMODATION OF STORMWATER DRAINAGE IS NOT REQUIRED.
5. THE TREATMENT OF THE VERGE SHALL BE DISCUSSED WITH THE APPROVAL AUTHORITY.
6. DRAWING TO BE READ IN CONJUNCTION WITH SECTION 3.2.2.5.
7. THIS CROSS SECTION SHALL ONLY BE USED FOR NON-MOTORISED TRANSPORT LINKS. NO VEHICULAR ACCESS WILL BE ALLOWED.

CITY OF CAPE TOWN
ISIXEKO SASEKAPA
STAD KAAPSTAD

CITY OF CAPE TOWN
URBAN MOBILITY

TITLE

TYPICAL CROSS SECTION
CLASS 6 PEDESTRIAN ONLY LINK (6m ROAD RESERVE)

STANDARDS AND GUIDELINES DETAILS

SCALE	PAPER
N.T.S.	A4
DRAWING No.	REV
RD6.5	D

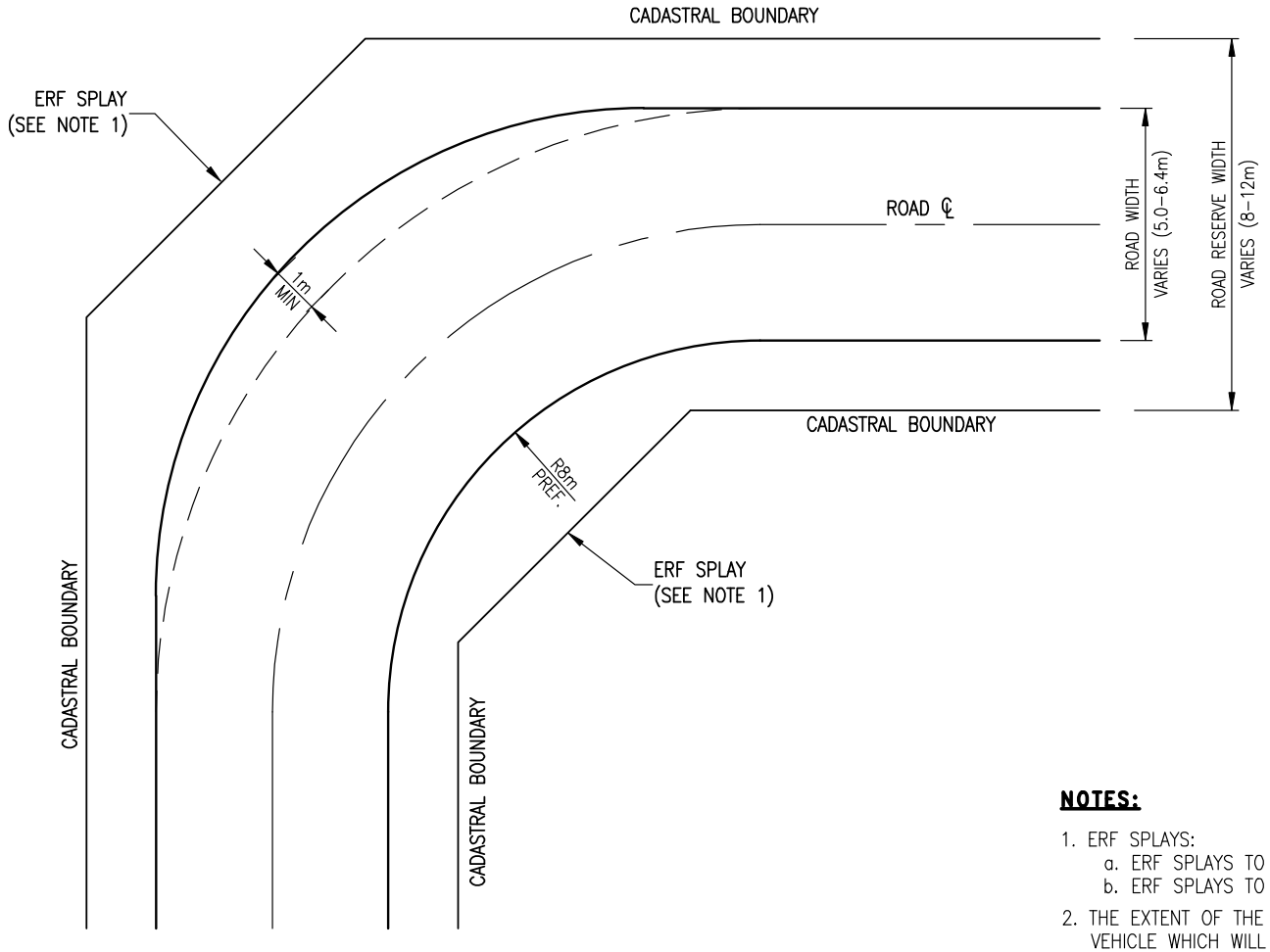

PLAN VIEW

NOTES:

1. ERF SPLAYS:
   a. ERF SPLAYS TO BE DETERMINED BY ROAD RESERVE WIDTH.
   b. ERF SPLAYS TO CONFORM TO THE APPLICABLE REGULATIONS AND POLICIES.
2. THE EXTENT OF THE ROAD WIDENING MUST BE BASED ON THE APPLICABLE DESIGN VEHICLE WHICH WILL BE USING THE ROAD.
3. THE MINIMUM ROAD WIDENING SHALL BE 1m.

CITY OF CAPE TOWN
ISIXEKO SASEKAPA
STAD KAAPSTAD

CITY OF CAPE TOWN
URBAN MOBILITY

TITLE

HORIZONTAL CURVE WIDENING ON CLASS 5 ROAD RESERVES

STANDARDS AND GUIDELINES DETAILS

SCALE	PAPER
N.T.S.	A4
DRAWING No.	REV
RD7	A

P:\CAD\R&SD\ITI_01 Design\T_1000B Standards\T_1000RS DESIGN_Roads and Stormwater\0002 Drawings_Version4.0\01 RD\RD7 – Horizontal Curve Road Widening_RevA.dwg

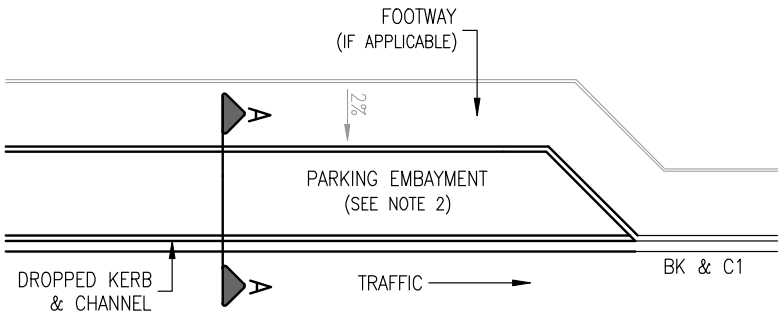

LOW SIDE OF ROAD (WITH KERB & CHANNEL)

SCALE 1:200

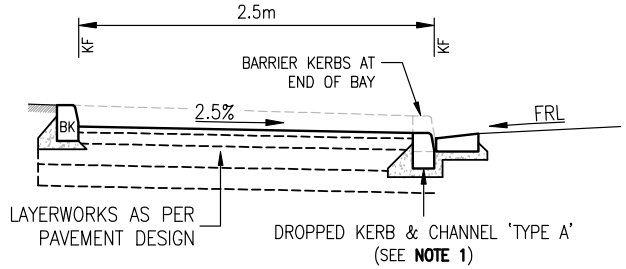

SECTION A–A

SCALE 1:50

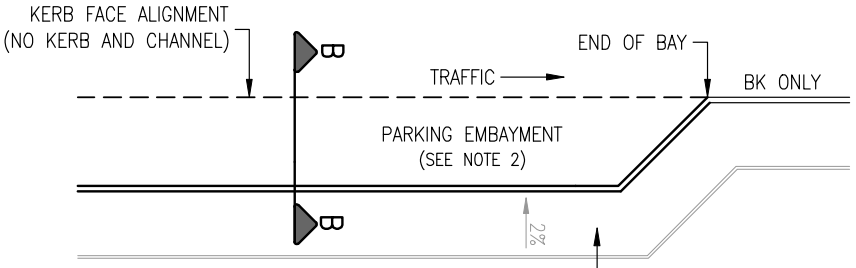

HIGH SIDE OF ROAD (KERB ONLY)

SCALE 1:200

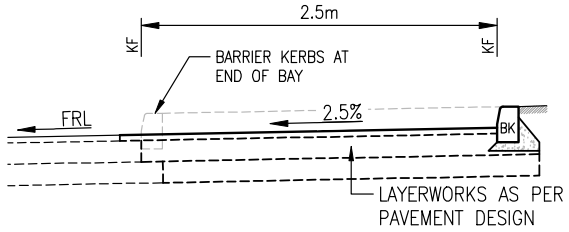

SECTION B–B

SCALE 1:50

NOTES:

1. REFER TO DRAWING RD2.1 FOR DROPPED KERB AND CHANNEL DETAILS (TYPE 'A').
2. REFER TO DRAWING RD9 FOR VARIOUS PARKING LAYOUTS.
3. REFER TO CHAPTER 8 FOR PAVEMENT DESIGN.

NGL: NATURAL GROUND LEVEL
FRL: FINISHED ROAD LEVEL
FSL: FINISHED SURFACE LEVEL
KF: KERB FACE

CITY OF CAPE TOWN
ISIXEKO SASEKAPA
STAD KAAPSTAD

CITY OF CAPE TOWN
URBAN MOBILITY

TITLE

TYPICAL EMBAYMENT PARALLEL PARKING

STANDARDS AND GUIDELINES DETAILS

SCALE	PAPER
SHOWN	A4
DRAWING No.	REV
RD8.1	A

P:\CAD\R&SD\ITI_01 Design\T_1000B Standards\T_1000RS DESIGN_Roads and Stormwater\0002 Drawings_Version4.0\01 RD\RD8.1 – Embayment – Parallel Parking_RevA.dwg

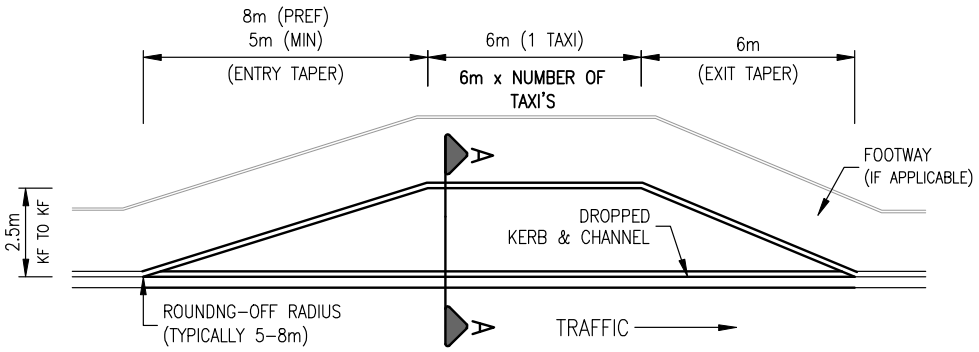

LOW SIDE OF ROAD (WITH KERB & CHANNEL)
SCALE 1:200

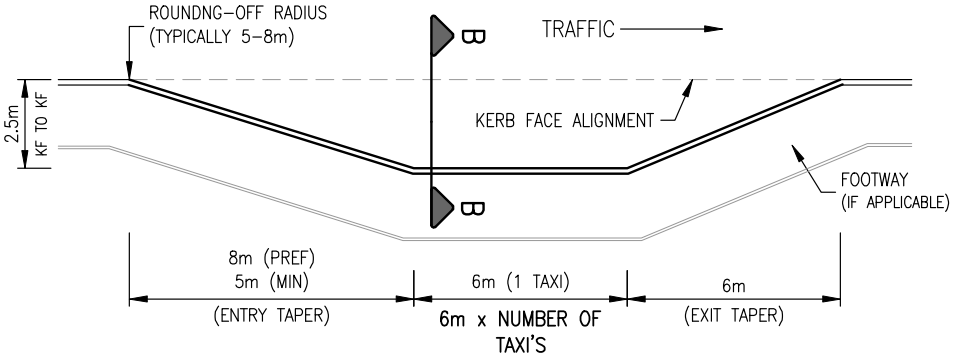

HIGH SIDE OF ROAD (KERB ONLY)
SCALE 1:200

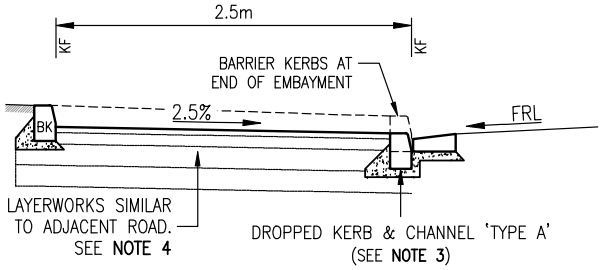

SECTION A-A
SCALE 1:50

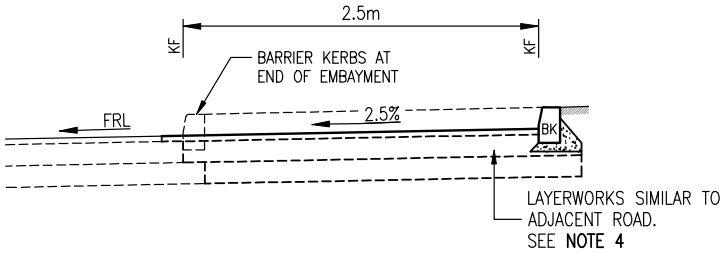

SECTION B-B
SCALE 1:50

NOTES:

1. WHERE A TAXI EMBAYMENT IS REQUIRED AT AN INTERSECTION, IT SHALL BE POSITIONED IMMEDIATELY DOWNSTREAM OF THE INTERSECTION.
2. AT PEDESTRIAN CROSSING POINTS, TAXI EMBAYMENTS SHALL BE POSITIONED IMMEDIATELY AFTER THE PEDESTRIAN CROSSING.
3. AN ENTRY TAPER LENGTH OF 8m IS PREFERRED. HOWEVER, WHERE SPACE CONSTRAINTS ARE APPLICABLE, A MINIMUM ENTRY LENGTH OF 5m WILL BE ACCEPTED.
4. REFER TO DRAWING RD2.1 FOR DROPPED KERB AND CHANNEL DETAILS (TYPE 'A').
5. REFER TO CHAPTER 8 FOR PAVEMENT DESIGN.

NGL: NATURAL GROUND LEVEL
FRL: FINISHED ROAD LEVEL
FSL: FINISHED SURFACE LEVEL
KF: KERB FACE

CITY OF CAPE TOWN
ISIXEKO SASEKAPA
STAD KAAPSTAD

CITY OF CAPE TOWN
URBAN MOBILITY

TITLE

TYPICAL EMBAYMENT
MINI-BUS TAXI

STANDARDS AND GUIDELINES DETAILS

SCALE	PAPER
SHOWN	A4
DRAWING No.	REV
RD8.2	A

P:\CAD\R&SD\ITI_01 Design\T_1000B Standards\T_1000RS DESIGN_Roads and Stormwater\0002 Drawings_Version4.0\01 RD\RD8.2 - Embayment - Mini-Bus Taxi_RevA.dwg

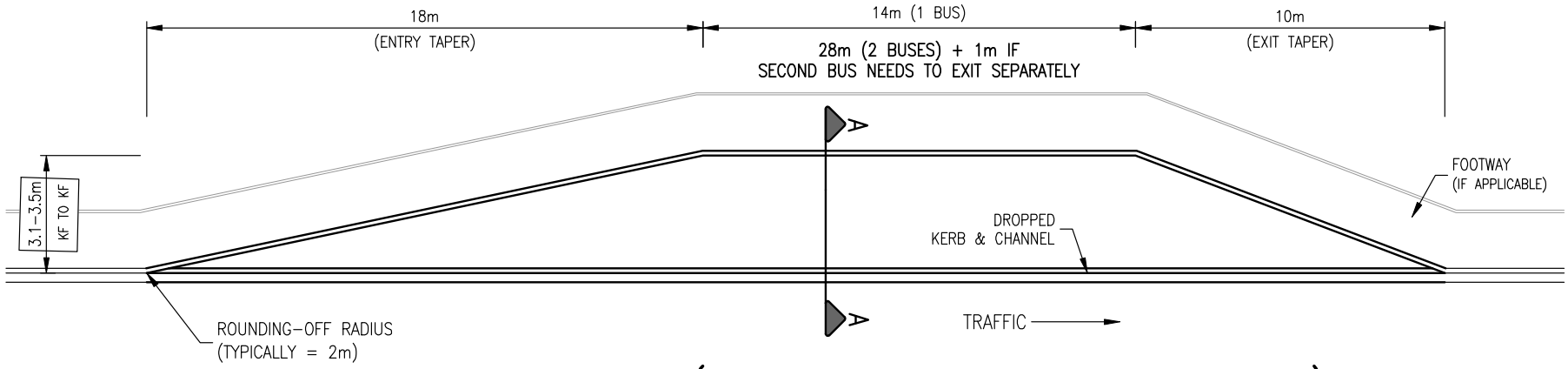

PLAN VIEW (EMBAYMENT ON LOW SIDE OF ROADWAY)

SCALE 1:200

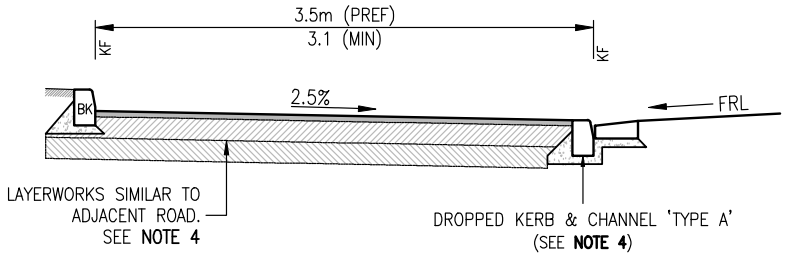

SECTION A–A

SCALE 1:50

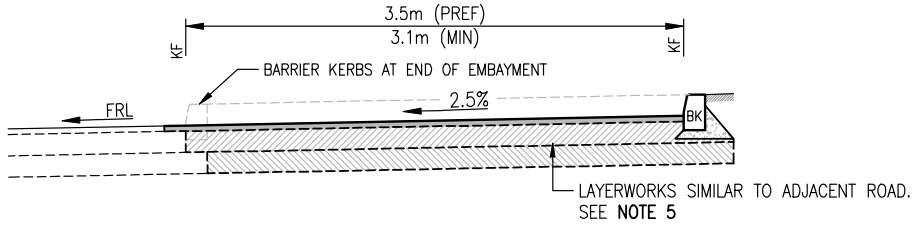

SECTION THROUGH EMBAYMENT SITUATED ON HIGH SIDE OF ROADWAY

SCALE 1:50

NOTES:

1. WHERE A BUS STOP IS REQUIRED AT AN INTERSECTION, IT SHALL BE POSITIONED IMMEDIATELY DOWNSTREAM OF THE INTERSECTION.
2. AT PEDESTRIAN CROSSING POINTS, BUS EMBAYMENTS SHALL BE POSITIONED IMMEDIATELY AFTER THE PEDESTRIAN CROSSING.
3. AN EMBAYMENT WIDTH IS 3.5m IS PREFERRED. HOWEVER, WHERE SPACE CONSTRAINTS ARE APPLICABLE, A MINIMUM WIDTH OF 3.1m WILL BE ACCEPTED.
4. REFER TO DRAWING RD2.1 FOR DROPPED KERB AND CHANNEL DETAILS (TYPE 'A').
5. REFER TO CHAPTER 8 FOR PAVEMENT DESIGN.

NGL: NATURAL GROUND LEVEL
FRL: FINISHED ROAD LEVEL
FSL: FINISHED SURFACE LEVEL
KF: KERB FACE

CITY OF CAPE TOWN
ISIXEKO SASEKAPA
STAD KAAPSTAD

CITY OF CAPE TOWN
URBAN MOBILITY

TITLE

TYPICAL EMBAYMENT

BUS (NOT MY-CITY BUS)

STANDARDS AND GUIDELINES DETAILS

SCALE	PAPER
SHOWN	A4
DRAWING No.	REV
RD8.3	A

P:\CAD\R&SD\ITI_01 Design\T_1000B Standards\T_1000RS DESIGN_Roads and Stormwater\0002 Drawings_Version4.0\01 RD\RD8.3 – Embayment – Bus_RevA.dwg

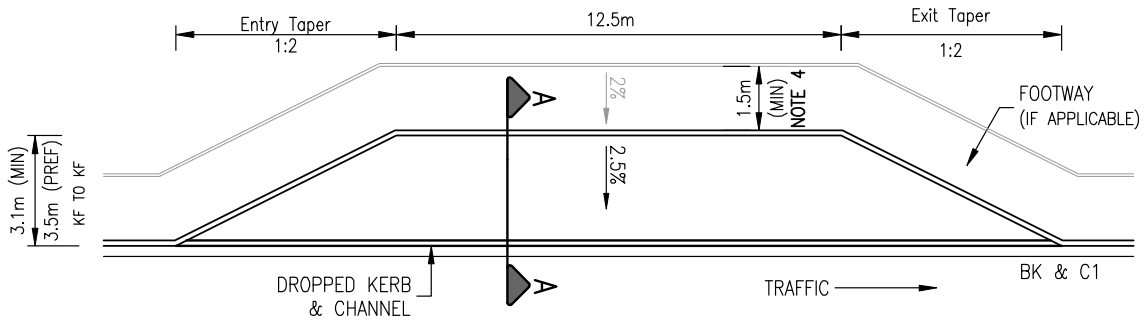

LOW SIDE OF ROAD (WITH KERB & CHANNEL)

SCALE 1:200

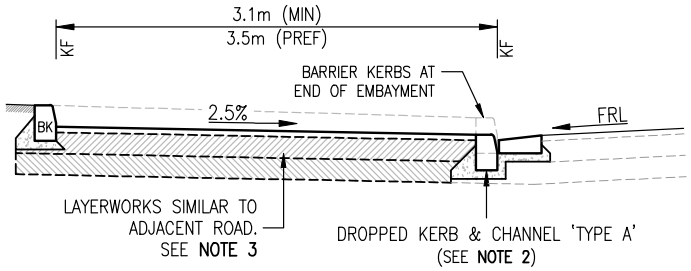

SECTION A–A

SCALE 1:50

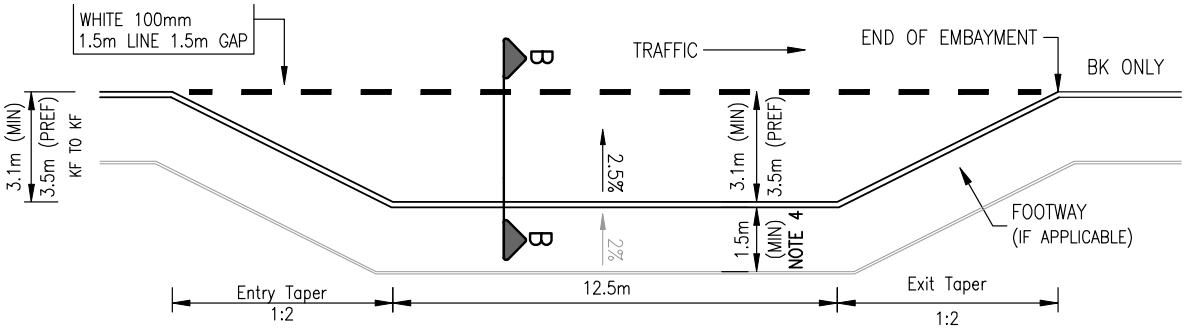

HIGH SIDE OF ROAD (KERB ONLY)

SCALE 1:200

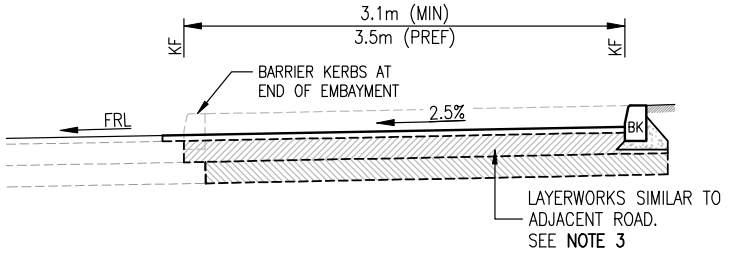

SECTION B–B

SCALE 1:50

NOTES:

1. DRAWING TO BE READ IN CONJUNCTION WITH SECTION 14.2 "REFUSE (SOLID WASTE) COLLECTION".
2. REFER TO DRAWING RD2.1 FOR DROPPED KERB AND CHANNEL DETAILS (TYPE 'A').
3. REFER TO CHAPTER 8 FOR PAVEMENT DESIGN.
4. THE FOOTWAY SHOULD MATCH THE EXISTING FOOTWAY WIDTH, BUT SHALL NEVER BE LESS THAN 1.5m AROUND THE EMBAYMENT. WHERE A REFUSE EMBAYMENT IS PROVIDED ON A CLASS 5 RESIDENTIAL STREET (OR LOW TRAFFIC VOLUMES), THE EMBAYMENT WIDTH MAY BE REDUCED TO 2.5m, IN ORDER TO ACCOMMODATE THE MINIMUM FOOTWAY WIDTH.

NGL: NATURAL GROUND LEVEL
FRL: FINISHED ROAD LEVEL
FSL: FINISHED SURFACE LEVEL
KF: KERB FACE

CITY OF CAPE TOWN
ISIXEKO SASEKAPA
STAD KAAPSTAD

CITY OF CAPE TOWN
URBAN MOBILITY

TITLE

TYPICAL EMBAYMENT REFUSE REMOVAL

STANDARDS AND GUIDELINES DETAILS

SCALE	PAPER
SHOWN	A4
DRAWING No.	REV
RD8.4	C

P:\CAD\R&SD\ITI_01 Design\T_1000B Standards\T_1000RS DESIGN_Roads and Stormwater\0002 Drawings_Version4.0\01 RD\RD8.4 – Embayment – Refuse_RevC.dwg

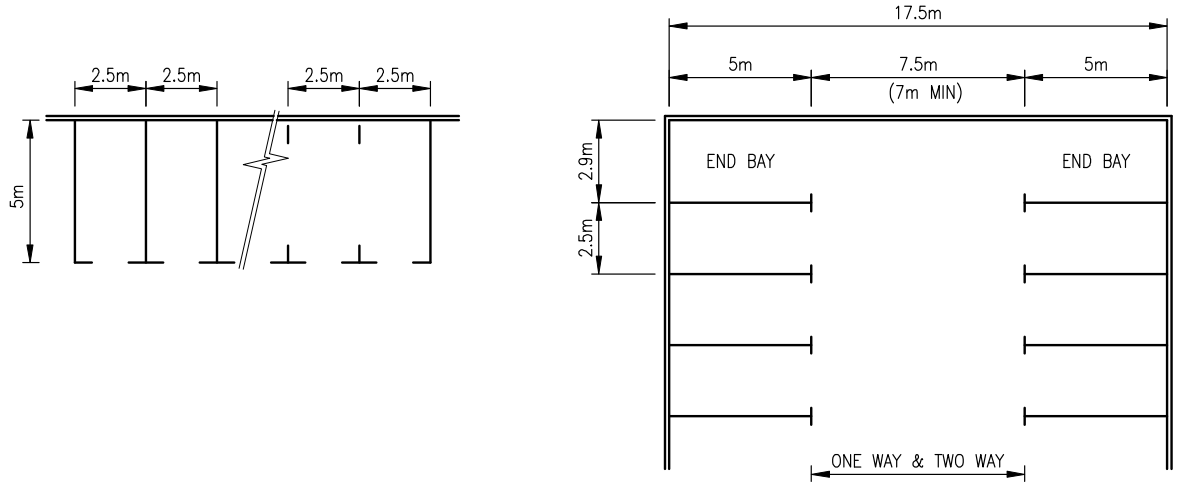

90° PARKING

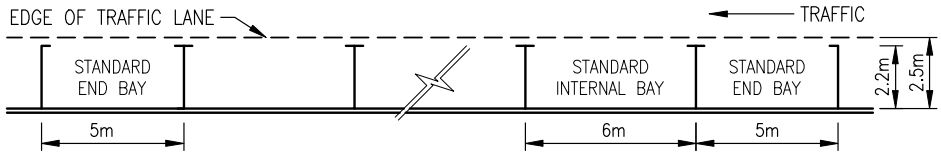

WITHOUT MOTOR CYCLE BAYS

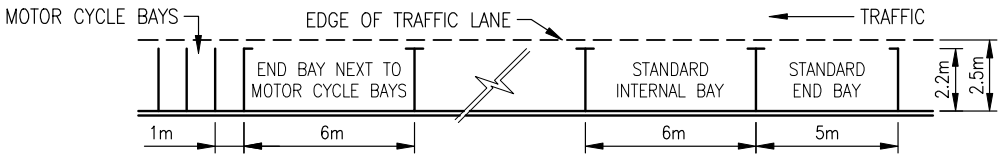

WITH MOTOR CYCLE BAYS

PARALLEL PARKING

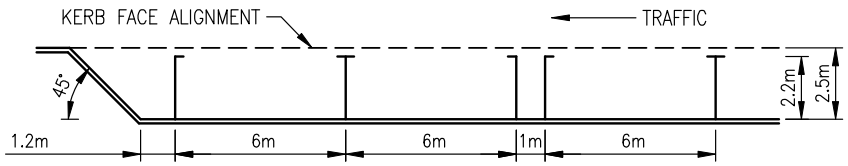

HIGHER ORDER ROADS (CLASS 4 AND HIGHER)

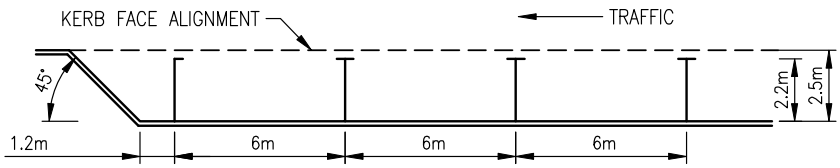

LOWER ORDER ROAD (CLASS 5 RESIDENTIAL)

KERB–SIDE EMBAYMENT PARKING

CITY OF CAPE TOWN
ISIXEKO SASEKAPA
STAD KAAPSTAD

CITY OF CAPE TOWN
URBAN MOBILITY

TITLE

PARKING LAYOUT
90°, PARALLEL & KERB-SIDE EMBAYMENT PARKING

STANDARDS AND GUIDELINES DETAILS

SHEET 1

SCALE	PAPER
1:250	A4
DRAWING No.	REV
RD9.1	B

P:\CAD\R&SD\ITL_01 Design\T_1000B Standards\T_1000RS DESIGN_Roads and Stormwater\0002 Drawings_Version4.0\01 RD\RD9.1 – Parking Layout – 90degree, Parallel, Kerbside_RevB.dwg

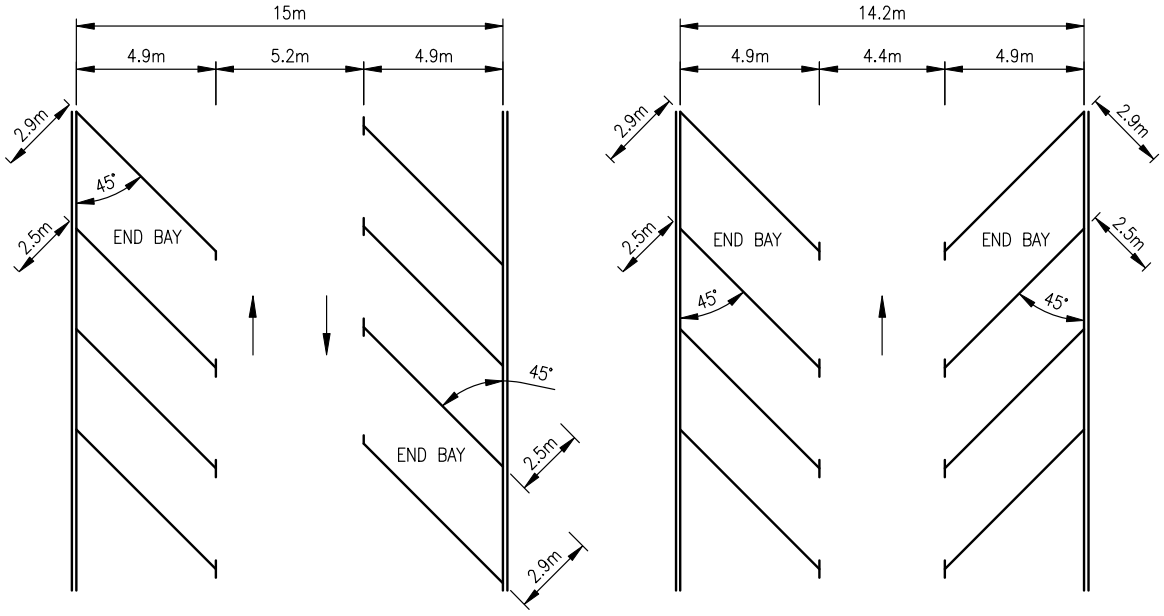

TWO–WAY AISLE ONE–WAY AISLE

PARKING LAYOUT: 45° BAYS (NON–INTERLOCKING)

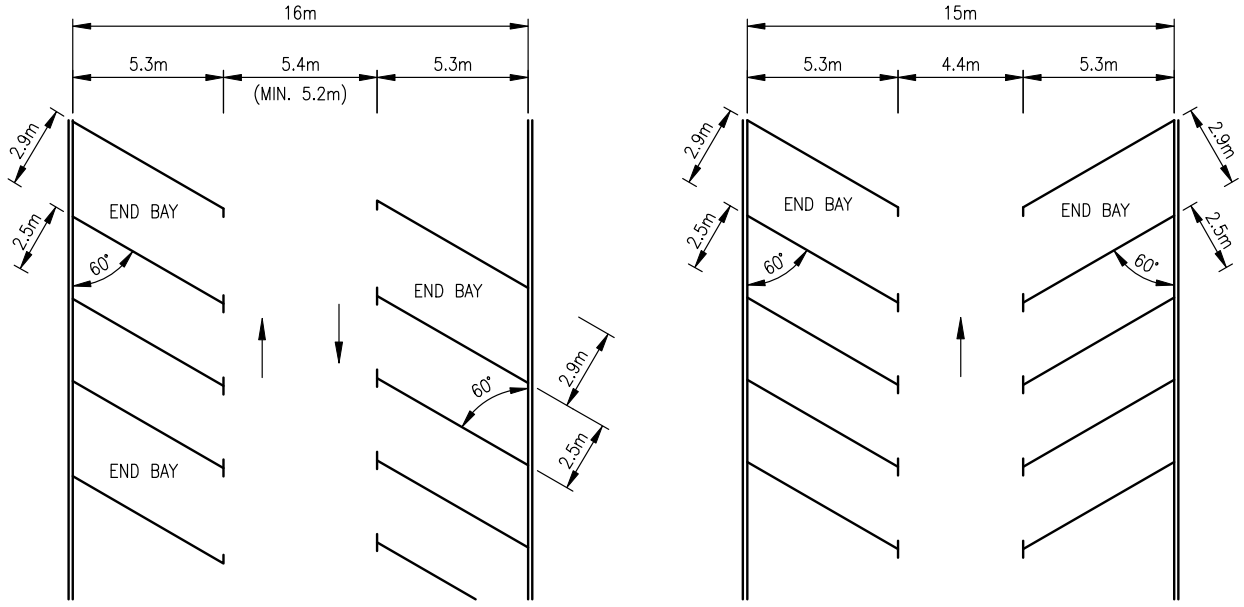

TWO–WAY AISLE ONE–WAY AISLE

PARKING LAYOUT: 60° BAYS (NON–INTERLOCKING)

NOTES:

1. END BAYS ARE ILLUSTRATED FIGURATIVELY AND WILL DEPEND ON SITE SPECIFIC LAYOUT.

CITY OF CAPE TOWN
ISIXEKO SASEKAPA
STAD KAAPSTAD

CITY OF CAPE TOWN
URBAN MOBILITY

TITLE

PARKING LAYOUT

45° & 60° PARKING (NON-INTERLOCKING)

STANDARDS AND GUIDELINES DETAILS **SHEET 2**

SCALE	PAPER
1:250	A4
DRAWING No.	REV
RD9.2	A

P:\CAD\R&SD\TT_01 Design\T_1000B Standards\T_1000RS DESIGN_Roads and Stormwater\0002 Drawings_Version4.0\01 RD\RD9.2 – Parking Layout – 45&60-degree (non_interlocking)_RevA.dwg

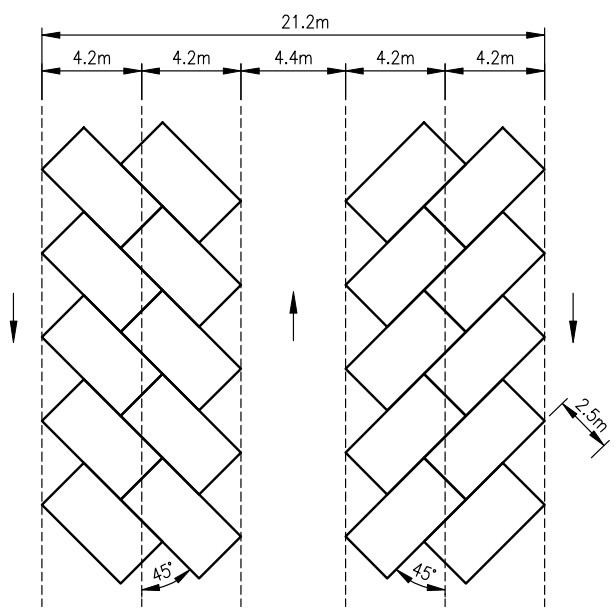

ONE–WAY

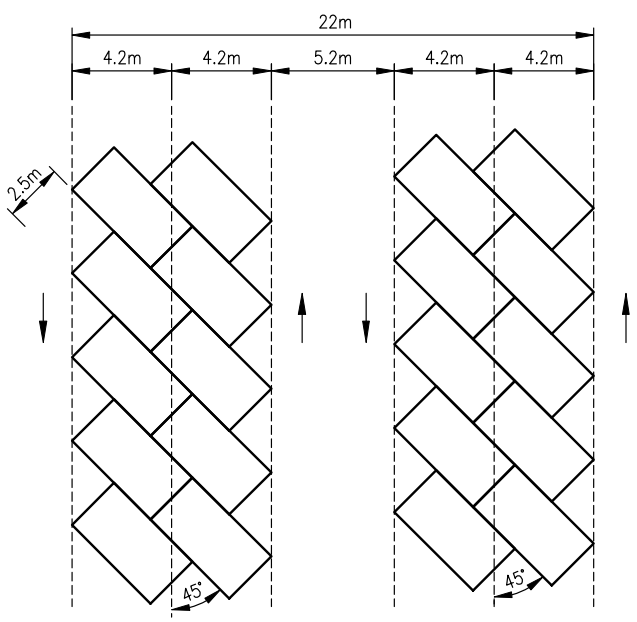

TWO–WAY

PARKING LAYOUT: 45° BAYS (INTERLOCKING)

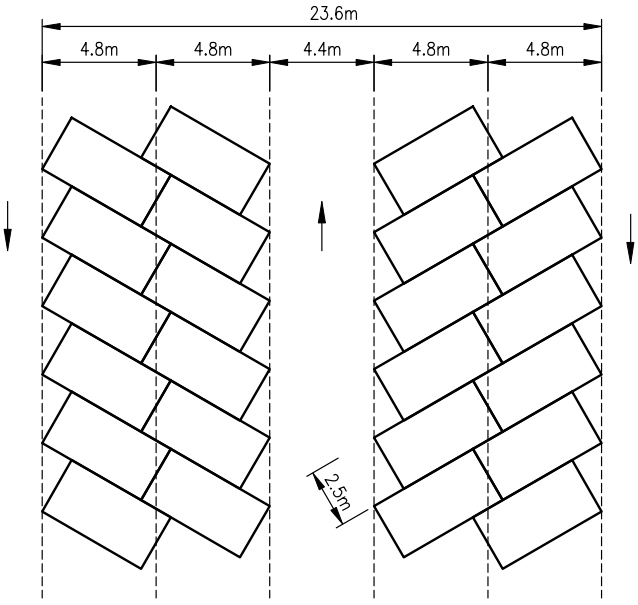

ONE–WAY

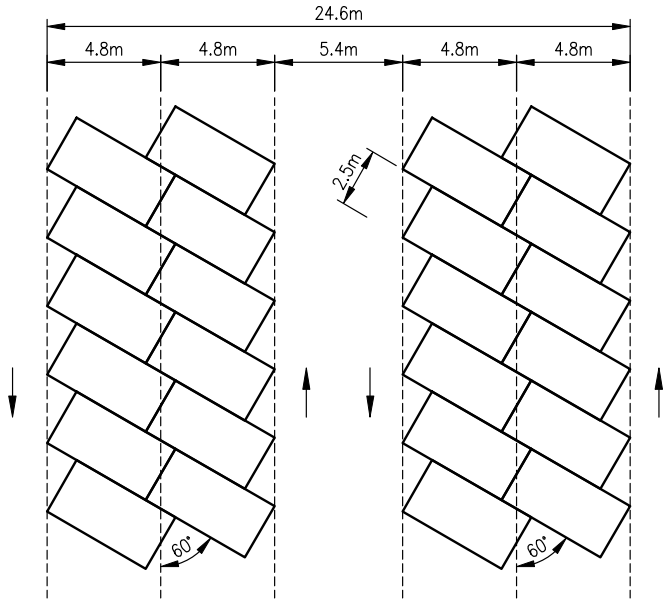

TWO–WAY

PARKING LAYOUT: 60° BAYS (INTERLOCKING)

P:\CAD\R&SD\TT_01 Design\T_1000B Standards\T_1000RS DESIGN_Roads and Stormwater\0002 Drawings_Version4.0\01 RD\RD9.3 – Parking Layout – 45&60-degree (interlocking)_RevA.dwg

CITY OF CAPE TOWN
ISIXEKO SASEKAPA
STAD KAAPSTAD

CITY OF CAPE TOWN
URBAN MOBILITY

TITLE

PARKING LAYOUT

45° & 60° PARKING (INTERLOCKING)

STANDARDS AND GUIDELINES DETAILS

SHEET 3

SCALE	PAPER
N.T.S.	**A4**
DRAWING No.	REV
RD9.3	**A**

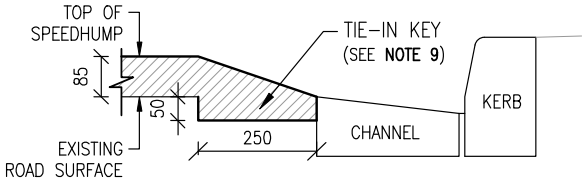

SECTION B–B

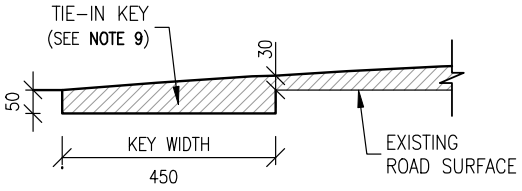

DETAIL A: TIE-IN KEY

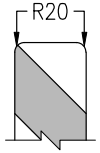

W401 CORNER FINISH

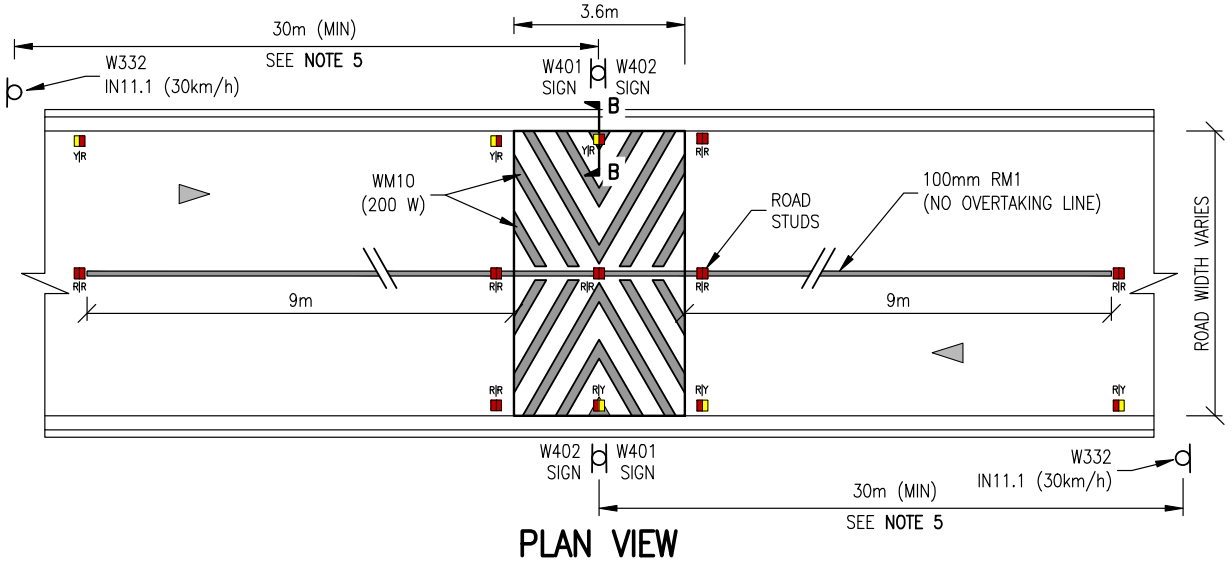

PLAN VIEW

TABLE 1: SPEED HUMP PROFILE																		
HEIGHT (mm)	0	18	34	47	59	68	76	81	84	**85**	84	81	76	68	59	47	34	10	0
OFFSET (m)	−1.8	−1.6	−1.4	−1.2	−1.0	−0.8	−0.6	−0.4	−0.2	**℄**	0.2	0.4	0.6	0.8	1.0	1.2	1.4	1.6	1.8

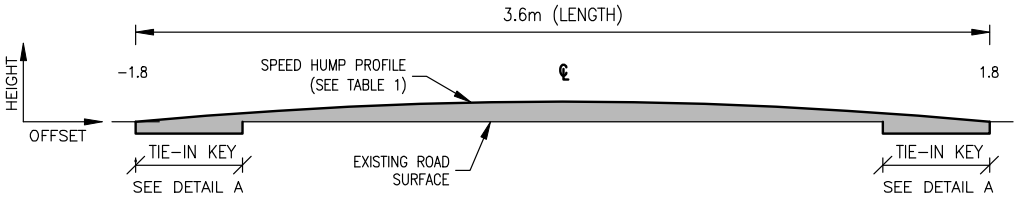

LONGITUDINAL SECTION: SPEED HUMP (PROFILE)

NOTES:

1. ROAD MARKINGS AND ROAD SIGNS TO COMPLY WITH "SADC–RTSM–VOL1" & "SARTSM–VOL2".
2. SPEED HUMPS SHALL NOT BE PLACED AT DRIVEWAYS OR STORMWATER CATCHPITS OR LOCATED ON EXISTING MANHOLES/STRUCTURES.
3. ALL ROAD SIGNS MUST HAVE CLASS 3 RETRO–REFLECTIVE BACKGROUND MATERIAL.
4. CORNERS OF THE W401 SIGNS TO BE ROUNDED AT 20mm RADII, IN ORDER TO IMPROVE PEDESTRIAN SAFETY.
5. THE W332 SIGN SHALL BE PLACED AT LEAST 30m AHEAD OF THE SPEED HUMP. HOWEVER, THE SETBACK SHALL ADHERE TO THE REQUIREMENTS OF SADC–RTSM–VOL1 SECTION 3.2.26 AND SARTSM–VOL2 FIGURE 12.7.
6. SIGNS SHALL NOT BE INSTALLED IN FRONT OF DRIVEWAYS OR BE OBSTRUCTED BY LANDSCAPING OR OTHER SIGNS/STRUCTURES.
7. SIGNS SHALL BE ERECTED BEFORE THE SPEED HUMP IS CONSTRUCTED.
8. ROAD MARKINGS TO BE PAINTED WITH RETRO–REFLECTIVE ROAD MARKING PAINT.
9. ROAD MARKINGS TO BE PAINTED AFTER CONSTRUCTION IS COMPLETE, ALLOWING ENOUGH TIME FOR ASPHALT TO COOL.
10. WM10 ROAD MARKINGS SHALL BE PAINTED IMMEDIATELY AFTER CONSTRUCTION AND MAY REQUIRE REPAINTING IF "BROWNING EFFECT" OCCURS.
11. RM12 "NO STOPPING LINES" SHALL BE PROVIDED, IF REQUIRED BY APPROVAL AUTHORITY.
12. SPEEDHUMP TO BE CONSTRUCTED FROM ASPHALT. THE ASPHALT TYPE TO BE SPECIFIED BY THE APPROVAL AUTHORITY.
13. A MAXIMUM VERTICAL TOLERANCE OF 5mm SHALL APPLY TO THE PROFILE OF THE SPEED HUMP.
14. ALL TIE–IN KEYS TO BE MECHANICALLY (SAW) CUT.
15. REFER TO DRAWING RM4.1 FOR ROAD SIGN SUPPORT INSTALLATION DETAILS.
16. ROAD STUDS SHALL BE IN ACCORDANCE WITH THE LATEST VERSIONS OF SANS 1442, 1463–1 AND 1463–2. REFER TO **SECTION 9.4** FOR FURTHER DETAILS.

CITY OF CAPE TOWN
ISIXEKO SASEKAPA
STAD KAAPSTAD

CITY OF CAPE TOWN
URBAN MOBILITY

TITLE

SPEED HUMP

STANDARDS AND GUIDELINES DETAILS

SCALE	PAPER
N.T.S.	A4
DRAWING No.	REV
RD10	D

P:\CAD\R&SD\ITI_01 Design\T_1000B Standards\T_1000RS DESIGN_Roads and Stormwater\0002 Drawings_Version4.0\01 RD\RD10 – Speed Hump RevD.dwg

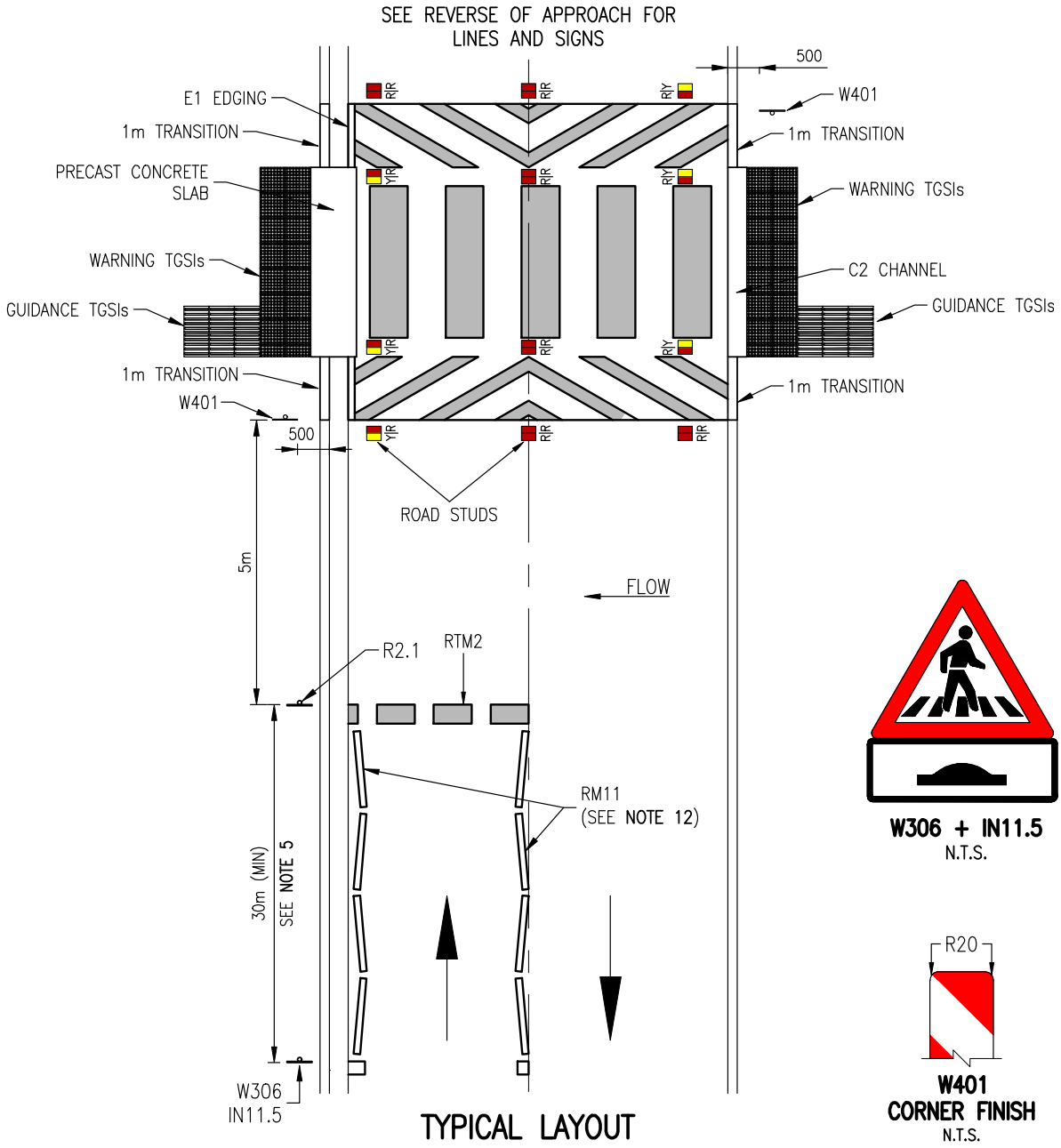

TYPICAL LAYOUT

W306 + IN11.5
N.T.S.

W401
CORNER FINISH
N.T.S.

NOTES:

1. ROAD MARKINGS AND SIGNS TO COMPLY WITH "SADC-RTSM-VOL1" & "SARTSM-VOL2".
2. RAISED PEDESTRIAN CROSSINGS SHALL NOT BE PLACED AT DRIVEWAYS OR STORMWATER CATCHPITS OR LOCATED ON EXISTING MANHOLES/STRUCTURES.
3. ALL ROAD SIGNS MUST HAVE CLASS 3 RETRO-REFLECTIVE BACKGROUND MATERIAL.
4. CORNERS OF THE W401 SIGNS TO BE ROUNDED AT 20mm RADII, IN ORDER TO IMPROVE PEDESTRIAN SAFETY.
5. THE PLACEMENT OF THE W306 SIGN IS DEPENDENT ON THE LOCATION OF THE PEDESTRIAN CROSSING, DISTANCE FROM STOP INTERSECTION, ROAD ALIGNMENT, ETC. THE SETBACK SHALL ADHERE TO THE REQUIREMENTS OF SADC-RTSM-VOL1 SECTION 3.4.6 AND SARTSM-VOL2 CHAPTER 14. IN AREAS WITH SHORT RESIDENTIAL BLOCK LEGNTHS OR MULTIPLE BENDS, THE W306 SIGNS SHALL BE PLACED AT LEAST 30m AHEAD OF THE RAISED PEDESTRIAN CROSSING.
6. THE W306 SIGNS SHOULD NOT BE INSTALLED IN FRONT OF DRIVEWAYS OR BE OBSTRUCTED BY LANDSCAPING OR OTHER SIGNS/STRUCTURES.
7. SIGNS MUST BE ERECTED PRIOR TO THE CONSTRUCTION OF THE CROSSING.
8. ROAD MARKINGS TO BE PAINTED WITH RETRO-REFLECTIVE ROAD MARKING PAINT.
9. ROAD MARKINGS TO BE PAINTED AFTER CONSTRUCTION IS COMPLETE, ALLOWING ENOUGH TIME FOR PREMIX TO COOL.
10. WM10 ROAD MARKINGS SHALL BE PAINTED IMMEDIATELY AFTER CONSTRUCTION AND MAY REQUIRE REPAINTING IF "BROWNING EFFECT" OCCURS.
11. RAISED PEDESTRIAN CROSSINGS SHALL BE CONSTRUCTED WITH ASPHALT. THE ASPHALT TYPE SHALL BE SPECIFIED BY THE APPROVAL AUTHORITY.
12. RM11 "ZIG-ZAG" MAY BE USED IN SITUATIONS WHICH ARE CONSIDERED POTENTIALLY DANGEROUS FOR PEDESTRIANS (e.g. POOR PEDESTRIAN VISIBILITY).
13. ASPHALT TABLE SHALL BE CONSTRUCTED IN TWO SEPARATE LAYERS OF EQUAL SIZE (THICKNESS). TACK COAT TO BE APPLIED ON SURFACE PRIOR TO PLACEMENT.
14. A MAXIMUM VERTICAL TOLERANCE OF 5mm SHALL APPLY TO THE "TABLE".
15. THE 375mm TIE-IN KEYS TO BE REMOVED BY MECHANICALLY (SAW) CUTTING THE EXISTING ROAD SURFACE.
16. REFER TO DRAWING RD2.2 FOR DROPPED KERB DETAILS.
17. REFER TO DRAWING RM4.1 FOR ROAD SIGN SUPPORT INSTALLATION DETAILS.
18. ROAD STUDS SHALL BE IN ACCORDANCE WITH THE LATEST VERSIONS OF SANS 1442, 1463-1 AND 1463-2. REFER TO **SECTION 9.4** FOR FURTHER DETAILS.
19. ALL NEW EDGINGS, CHANNELS AND KERBS MUST BE LAID WITH 20 MPa CONCRETE BEDDING/BACKING, UNLESS SHOWN OTHERWISE, ON SUBGRADE/SUBBASE COMPACTED TO THE REQUIRED SPECIFICATIONS.

CITY OF CAPE TOWN
ISIXEKO SASEKAPA
STAD KAAPSTAD

CITY OF CAPE TOWN
URBAN MOBILITY

TITLE

RAISED PEDESTRIAN CROSSING

STANDARDS AND GUIDELINES DETAILS

SHEET 1

SCALE	PAPER
N.T.S	A4
DRAWING No.	REV
RD11A	B

P:\CAD\R&SD\ITL_01 Design\T_1000B Standards\T_1000RS DESIGN_Roads and Stormwater\0002 Drawings_Version4.0\01 RD\RD11A - Raised Pedestrian Crossing RevB.dwg

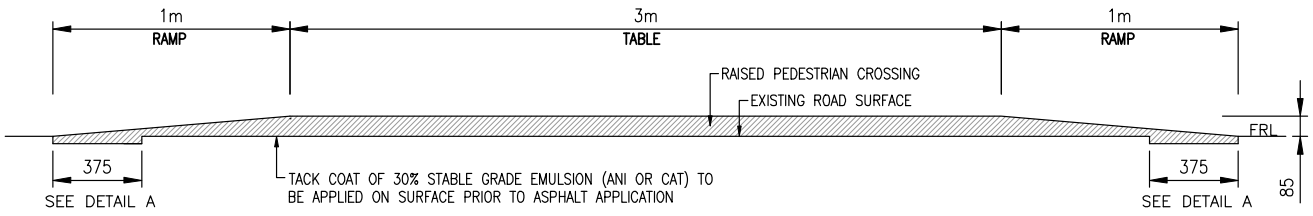

SECTION A–A: LONGITUDINAL SECTION

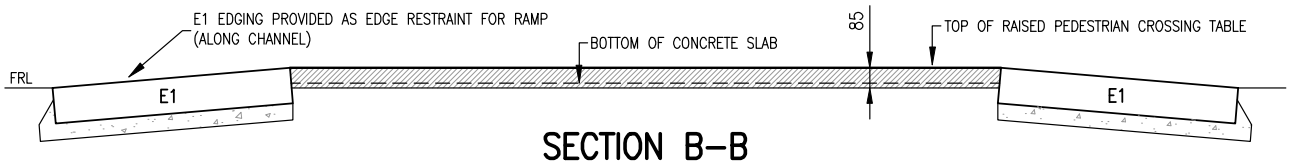

SECTION B–B

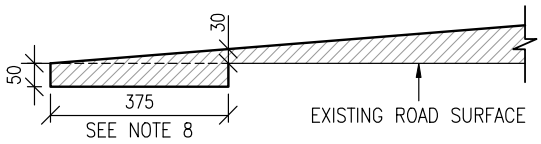

DETAIL A: TIE–IN KEY

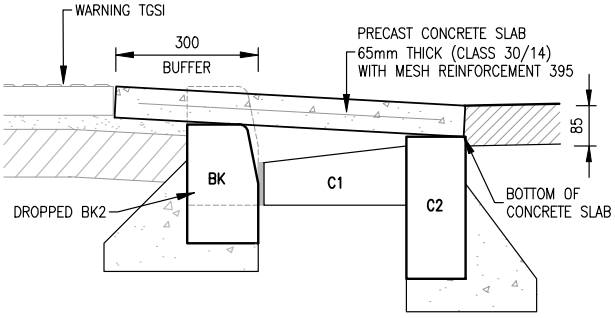

SECTION C–C

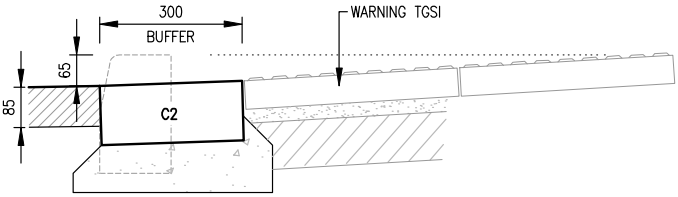

SECTION D–D

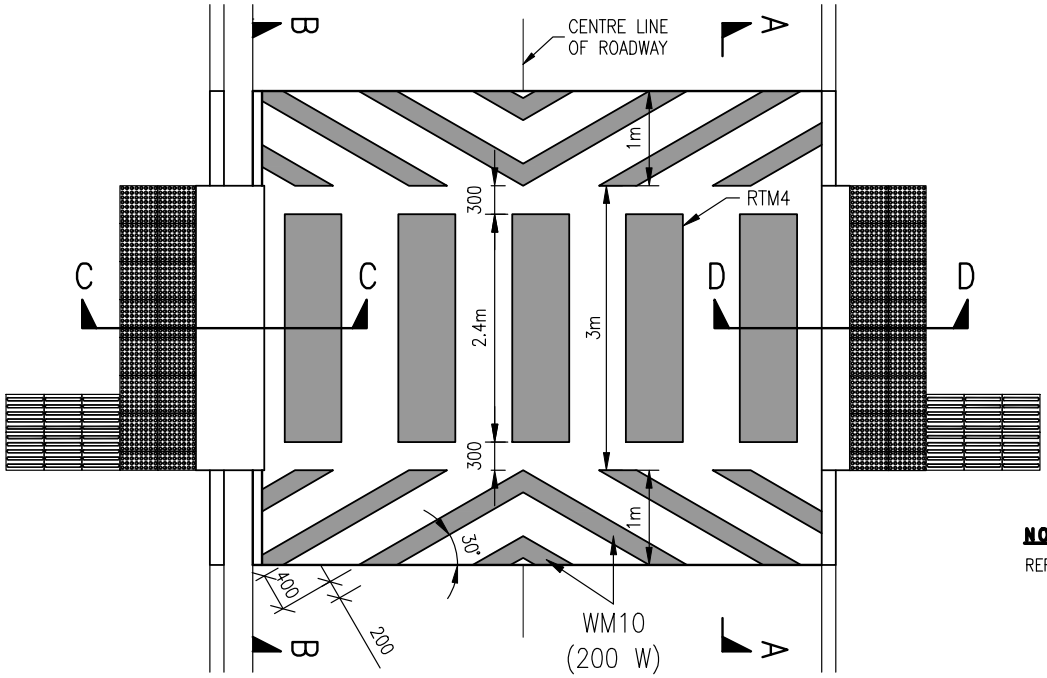

TYPICAL PLAN VIEW

NOTES:

REFER TO SHEET 1 FOR NOTES.

NGL: NATURAL GROUND LEVEL
FRL: FINISHED ROAD LEVEL
FSL: FINISHED SURFACE LEVEL

CITY OF CAPE TOWN
ISIXEKO SASEKAPA
STAD KAAPSTAD

CITY OF CAPE TOWN
URBAN MOBILITY

TITLE

RAISED PEDESTRIAN CROSSING

STANDARDS AND GUIDELINES DETAILS

SHEET 2

SCALE	PAPER
N.T.S	A4
DRAWING No.	REV
RD11B	B

P:\CAD\R&SD\TT_01 Design\T_1000B Standards\T_1000RS DESIGN_Roads and Stormwater\0002 Drawings_Version4.0\01 RD\RD11B – Raised Pedestrian Crossing RevB.dwg

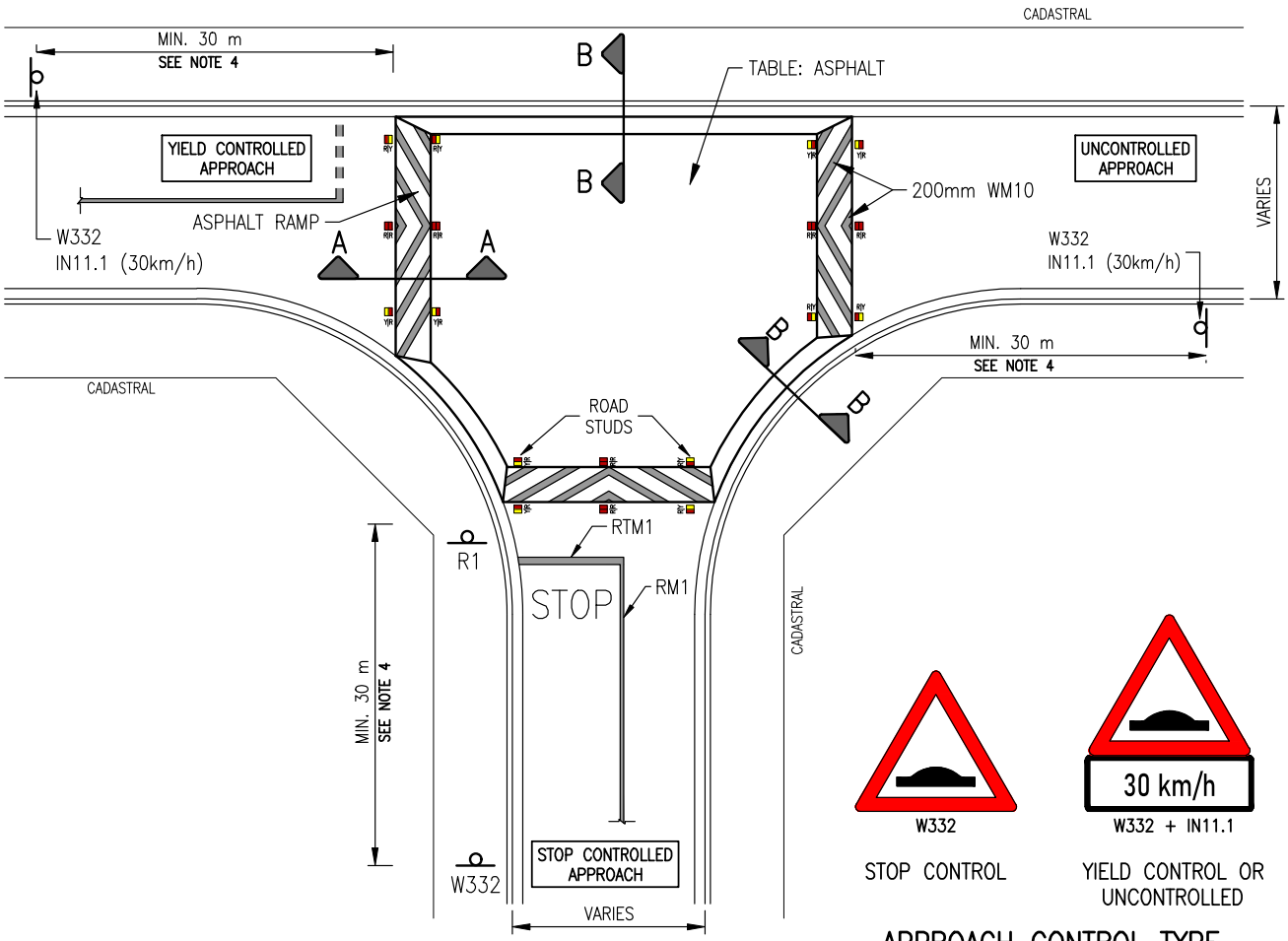

TYPICAL LAYOUT

SCALE 1:200

STOP CONTROL

YIELD CONTROL OR UNCONTROLLED

APPROACH CONTROL TYPE

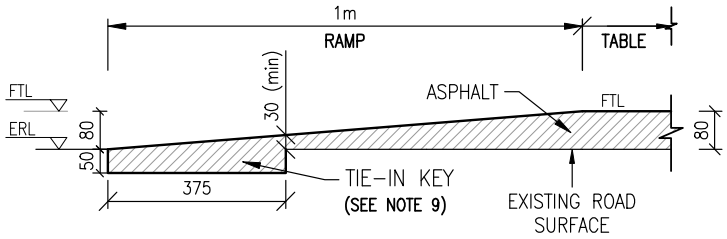

SECTION A–A

N.T.S.

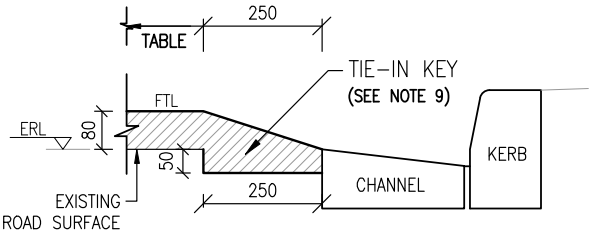

SECTION B–B

N.T.S.

NOTES:

1. ROAD MARKINGS AND SIGNS TO COMPLY WITH "SADC RTSM–VOL1" AND "SARTSM–VOL2".
2. ALL ROAD SIGNS SHALL BE 600mm IN SIZE AND MUST HAVE CLASS 3 RETRO–REFLECTIVE BACKGROUND MATERIAL. REFER TO DRAWING RM4 FOR ROAD SIGN SUPPORT INSTALLATION DETAILS.
3. ROAD MARKINGS TO BE PAINTED WITH RETRO–REFLECTIVE ROAD MARKING PAINT.
4. THE W332 SIGNS SHOULD NOT BE INSTALLED IN FRONT OF DRIVEWAYS.
5. SIGNS MUST BE ERECTED PRIOR TO THE CONSTRUCTION OF THE RAISED INTERSECTION. ROAD MARKINGS TO BE PAINTED AFTER CONSTRUCTION IS COMPLETE, ALLOWING ENOUGH TIME FOR ASPHALT TO COOL.
6. RAISED INTERSECTION SHALL BE CONSTRUCTED WITH CONTINUOUSLY MEDIUM GRADED ASPHALT. THE ASPHALT TYPE TO BE SPECIFIED BY THE APPROVAL AUTHORITY.
7. THE TABLE HEIGHT SHOULD AT ALL POINTS BE A FIXED DISTANCE ABOVE THE UNDERLYING STREET LEVEL (i.e. THE SHAPE OF THE TABLE SHOULD RESEMBLE THE SHAPE OF THE UNDERLYING LAYER).
8. THE ASPHALT TABLE SHALL BE CONSTRUCTED IN TWO SEPARATE LAYERS OF 40mm THICKNESS EACH.
9. IF THE RAISED INTERSECTION FORMS PART OF THE ORIGINAL CONSTRUCTION OF ROADS, THE TOP OF THE BASE LAYER SHALL BE LOCATED 40mm BELOW THE FINAL TABLE LEVEL (FTL). REFER TO DRAWING RD12.1B.
10. ALL TIE–IN KEYS TO BE MECHANICALLY (SAW) CUT.
11. ANY EXISTING MANHOLES LOCATED WITHIN THE RAISED INTERSECTION SHALL BE ADJUSTED TO THE NEW TABLE HEIGHT. NO MANHOLES TO BE LOCATED ON RAMPS.

ERL: EXISTING ROAD LEVEL
FTL: FINAL TABLE LEVEL

CITY OF CAPE TOWN
ISIXEKO SASEKAPA
STAD KAAPSTAD

CITY OF CAPE TOWN
URBAN MOBILITY

TITLE

RAISED INTERSECTION ASPHALT TABLE (FOR EXISTING ROADS)

STANDARDS AND GUIDELINES DETAILS

SCALE	PAPER
SHOWN	A4
DRAWING No.	REV
RD12.1A	B

P:\CAD\R&SD\TL_01 Design\T_1000B Standards\T_1000RS DESIGN_Roads and Stormwater\0002 Drawings_Version4.0\01 RD\RD12.1A – Raised Intersection – Asphalt (for exist roads) RevB.dwg

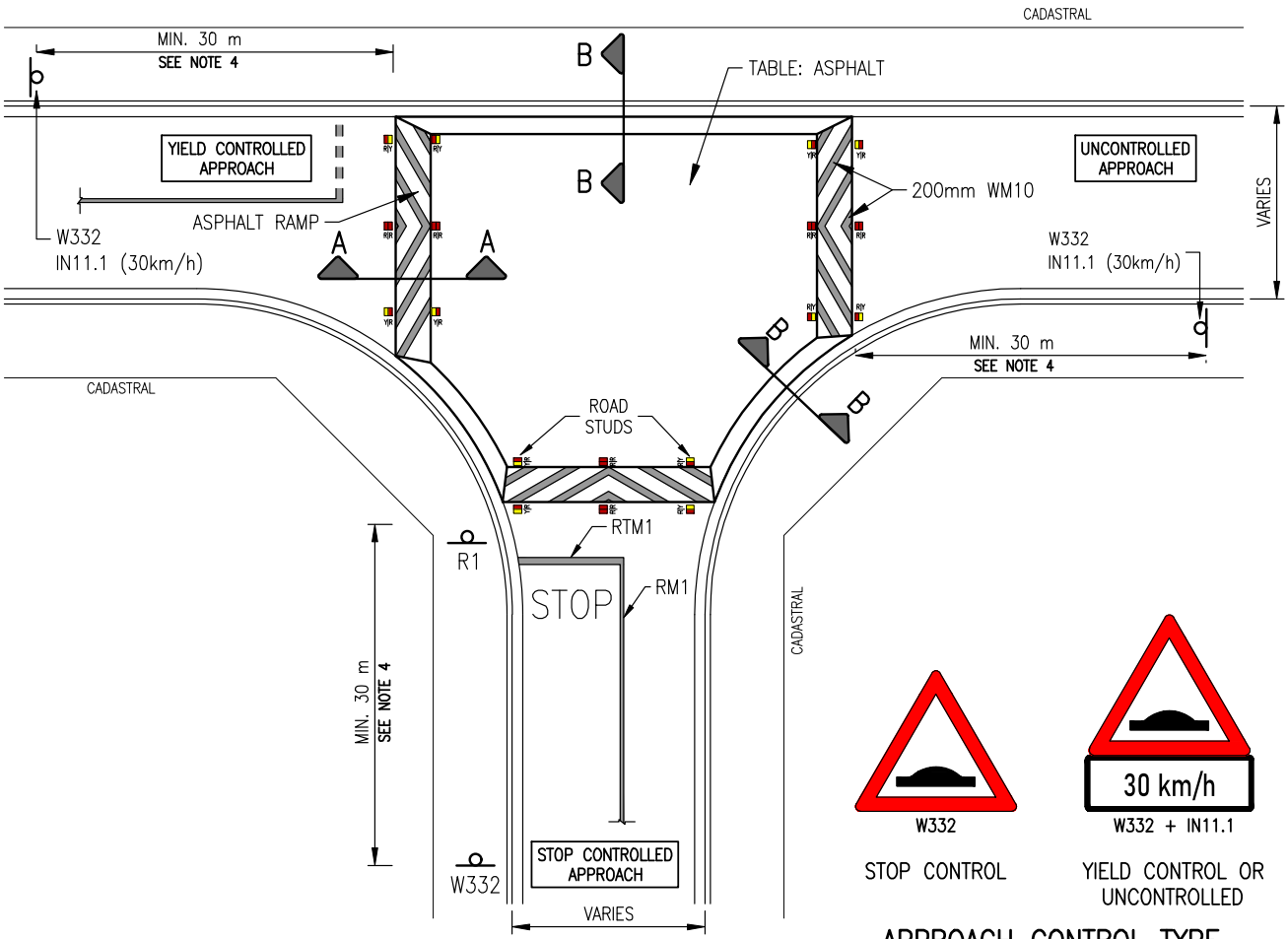

TYPICAL LAYOUT

SCALE 1:200

STOP CONTROL

YIELD CONTROL OR UNCONTROLLED

APPROACH CONTROL TYPE

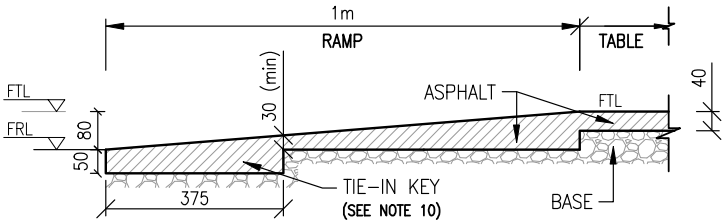

SECTION A–A

N.T.S.

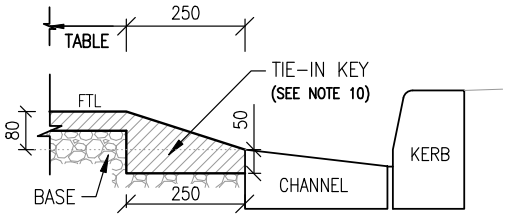

SECTION B–B

N.T.S.

NOTES:

1. ROAD MARKINGS AND SIGNS TO COMPLY WITH "SADC RTSM–VOL1" AND "SARTSM–VOL2".
2. ALL ROAD SIGNS SHALL BE 600mm IN SIZE AND MUST HAVE CLASS 3 RETRO–REFLECTIVE BACKGROUND MATERIAL. REFER TO DRAWING RM4 FOR ROAD SIGN SUPPORT INSTALLATION DETAILS.
3. ROAD MARKINGS TO BE PAINTED WITH RETRO–REFLECTIVE ROAD MARKING PAINT.
4. THE W332 SIGNS SHOULD NOT BE INSTALLED IN FRONT OF DRIVEWAYS.
5. SIGNS MUST BE ERECTED PRIOR TO THE CONSTRUCTION OF THE RAISED INTERSECTION. ROAD MARKINGS TO BE PAINTED AFTER CONSTRUCTION IS COMPLETE, ALLOWING ENOUGH TIME FOR ASPHALT TO COOL.
6. RAISED INTERSECTION SHALL BE CONSTRUCTED WITH CONTINUOUSLY MEDIUM GRADED ASPHALT. THE ASPHALT TYPE TO BE SPECIFIED BY THE APPROVAL AUTHORITY.
7. THE FINAL TABLE LEVEL (FTL) OF THE RAISED INTERSECTION SHALL BE 80mm HIGHER THAN THE FINAL ROAD LEVEL (FRL), i.e. INTERSECTION TABLE SHALL HAVE A THICKNESS OF 80mm.
8. THE TABLE HEIGHT SHOULD AT ALL POINTS BE A FIXED DISTANCE ABOVE THE UNDERLYING STREET LEVEL (i.e. THE SHAPE OF THE TABLE SHOULD RESEMBLE THE SHAPE OF THE UNDERLYING LAYER).
9. THE BASE LAYER OF THE TABLE SHALL BE CONSTRUCTED IN TWO EQUAL LAYERS.
10. ALL TIE–IN KEYS TO BE MECHANICALLY (SAW) CUT.
11. MANHOLES LOCATED WITHIN THE RAISED INTERSECTIONS SHALL BE CONSTRUCTED TO THE FINAL TABLE LEVEL (FTL). NO MANHOLES TO BE LOCATED ON RAMPS.

FRL: FINAL ROAD LEVEL
FTL: FINAL TABLE LEVEL

CITY OF CAPE TOWN
ISIXEKO SASEKAPA
STAD KAAPSTAD

CITY OF CAPE TOWN
URBAN MOBILITY

TITLE

RAISED INTERSECTION ASPHALT TABLE (FOR NEW ROADS)

STANDARDS AND GUIDELINES DETAILS

SCALE	PAPER
SHOWN	A4
DRAWING No.	REV
RD12.1B	B

P:\CAD\R&SD\TL_01 Design\T_1000B Standards\T_1000RS DESIGN_Roads and Stormwater\0002 Drawings_Version4.0\01 RD\RD12.1B – Raised Intersection – Asphalt (for new roads) RevB.dwg

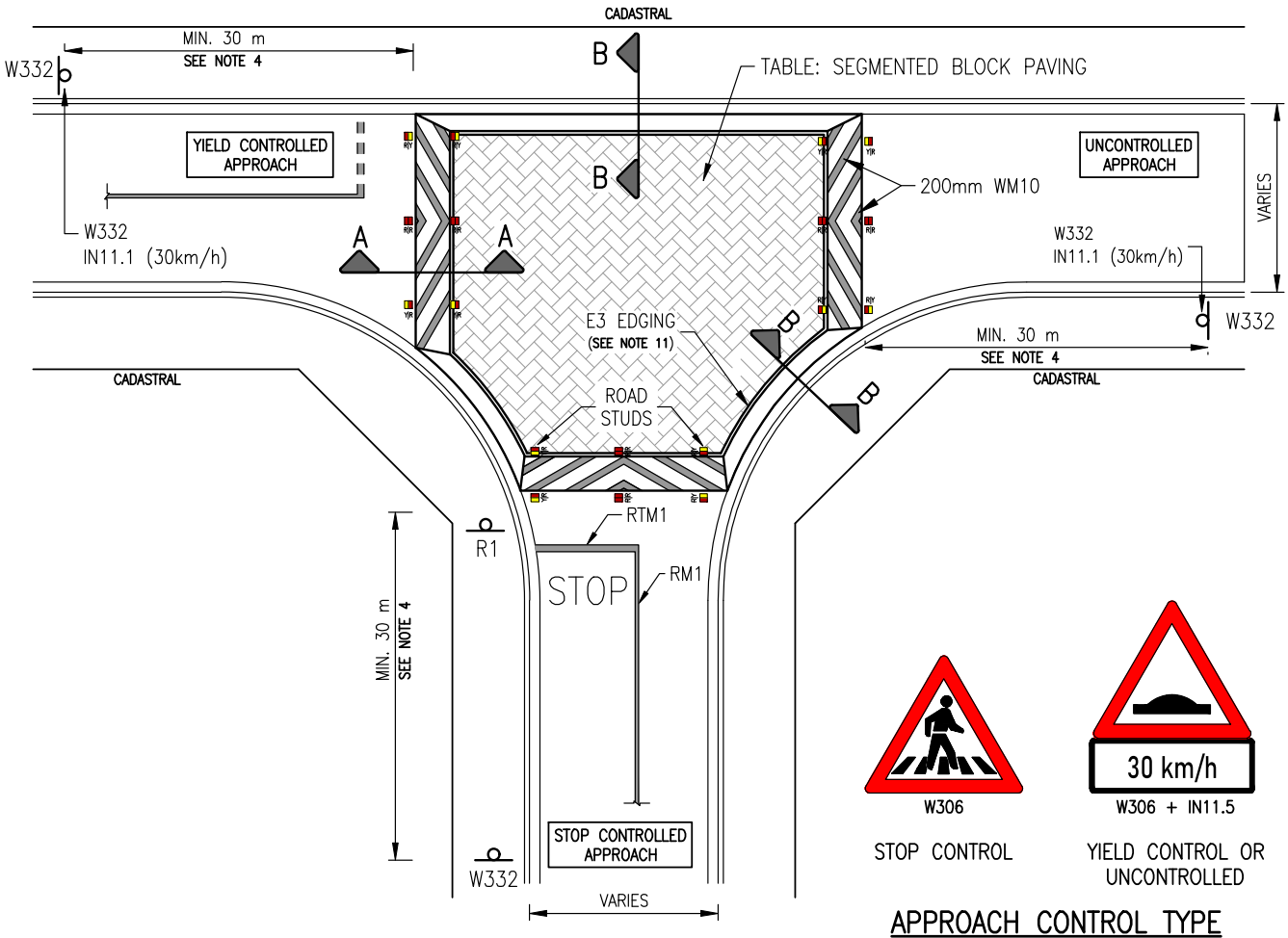

W306 STOP CONTROL

W306 + IN11.5 YIELD CONTROL OR UNCONTROLLED

APPROACH CONTROL TYPE

TYPICAL LAYOUT

SCALE 1:200

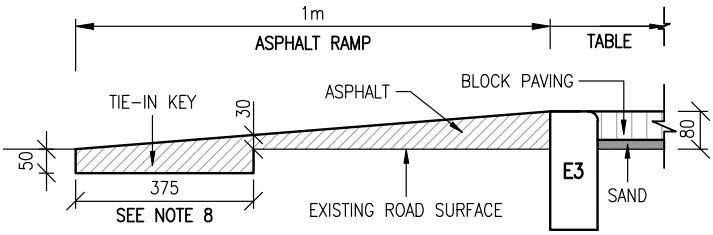

SECTION A–A

N.T.S.

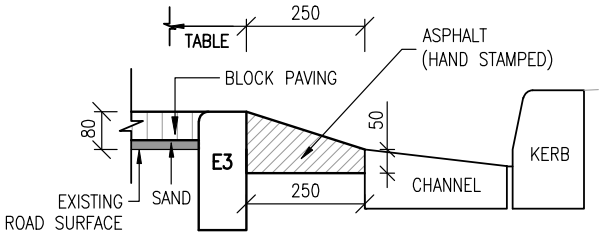

SECTION B–B

N.T.S.

NOTES:

1. ROAD MARKINGS AND SIGNS TO COMPLY WITH "SADC–RTSM–VOL1" AND "SARTSM–VOL2".
2. ALL ROAD SIGNS SHALL BE 600mm IN SIZE AND MUST HAVE CLASS 3 RETRO–REFLECTIVE BACKGROUND MATERIAL. REFER TO DRAWING RM4 FOR ROAD SIGN SUPPORT INSTALLATION DETAILS.
3. ROAD MARKINGS TO BE PAINTED WITH RETRO–REFLECTIVE ROAD MARKING PAINT.
4. THE W332 SIGNS SHALL NOT BE INSTALLED IN FRONT OF DRIVEWAYS.
5. SIGNS MUST BE ERECTED PRIOR TO THE CONSTRUCTION OF THE RAISED INTERSECTION. ROAD MARKINGS TO BE PAINTED AFTER CONSTRUCTION IS COMPLETE, ALLOWING ENOUGH TIME FOR ASPHALT TO COOL.
6. THE RAMPS SHALL BE CONSTRUCTED WITH ASPHALT AND THE TABLE FROM SEGMENTED BLOCK PAVING, AS SPECIFIED BY THE APPROVAL AUTHORITY.
7. THE TABLE HEIGHT SHOULD AT ALL POINTS BE A FIXED DISTANCE ABOVE THE UNDERLYING STREET LEVEL (i.e. THE SHAPE OF THE TABLE SHOULD RESEMBLE THE SHAPE OF THE UNDERLYING LAYER).
8. ALL TIE–IN KEYS TO BE MECHANICALLY (SAW) CUT.
9. THE SLOPE OF THE ASPHALT RAMP SHALL NOT EXCEED 1:10.
10. ON RADII, E3 EDGINGS SHALL BE SAW CUT INTO 330mm LENGTHS.
11. REFER TO DRAWING RD1.3 FOR EDGING INSTALLATION DETAILS.
12. ANY EXISTING MANHOLES LOCATED WITHIN THE RAISED INTERSECTION SHALL BE RAISED TO THE NEW SURFACE HEIGHT.

CITY OF CAPE TOWN
ISIXEKO SASEKAPA
STAD KAAPSTAD

CITY OF CAPE TOWN
URBAN MOBILITY

TITLE

RAISED INTERSECTION
SEGMENTED BLOCK PAVING TABLE

STANDARDS AND GUIDELINES DETAILS

SCALE	PAPER
SHOWN	A4
DRAWING No.	REV
RD12.2	B

P:\CAD\R&SD\ITL_01 Design\T_1000B Standards\T_1000RS DESIGN_Roads and Stormwater\0002 Drawings_Version4.0\01 RD\RD12.2 – Raised Intersection – Block Paving_RevB.dwg

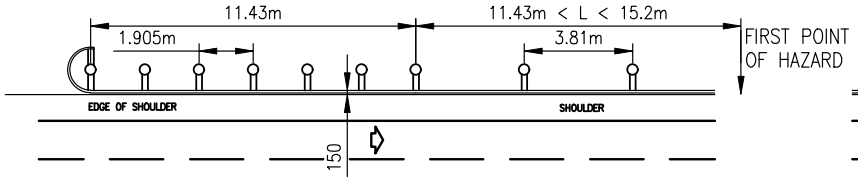

APPROACH END

SCALE 1:30

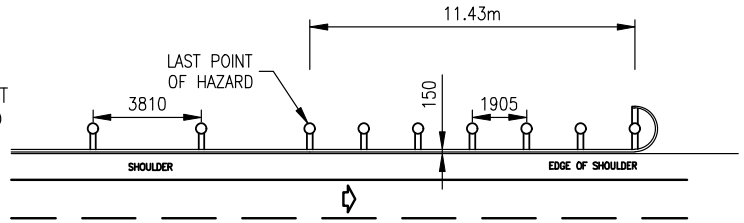

DEPARTURE END

SCALE 1:30

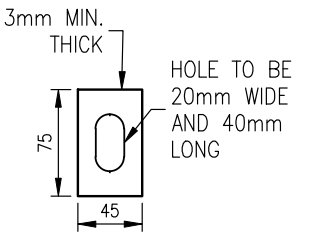

REINFORCING PLATE

SCALE 1:5

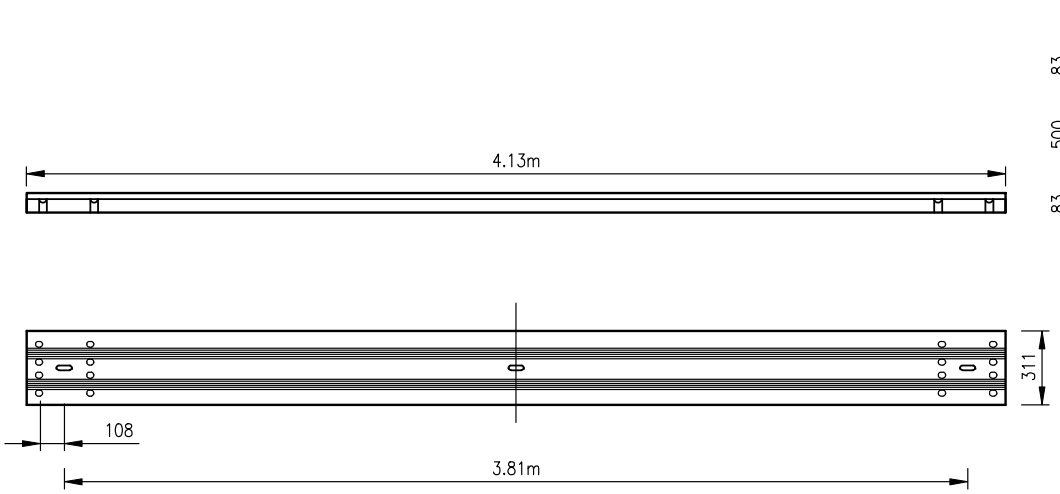

GUARDRAIL DETAIL

SCALE 1:30

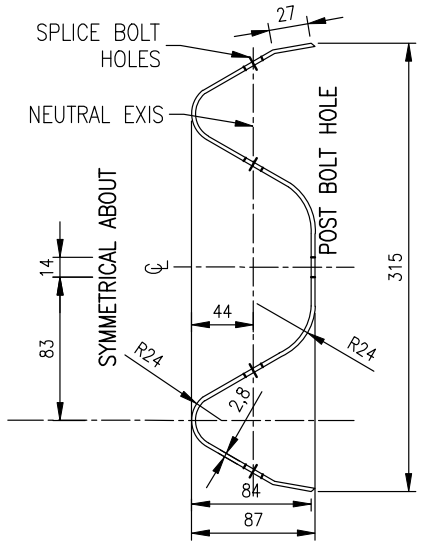

SECTION THROUGH GUARDRAIL

SCALE 1:5

NOTES:

1. GUARDRAILS AND DETAILS TO BE IN ACCORDANCE WITH SANS 1350 (2005).

CITY OF CAPE TOWN
ISIXEKO SASEKAPA
STAD KAAPSTAD

CITY OF CAPE TOWN
URBAN MOBILITY

TITLE

GUARDRAIL DETAILS

STANDARDS AND GUIDELINES DETAILS

SHEET 1

SCALE	PAPER
SHOWN	A4
DRAWING No.	REV
RD13.1	A

P:\CAD\R&SD\ITI_01 Design\T_1000B Standards\T_1000RS DESIGN_Roads and Stormwater\0002 Drawings_Version4.0\01 RD\RD13.1 – Guardrails (sheet 1)_RevA.dwg

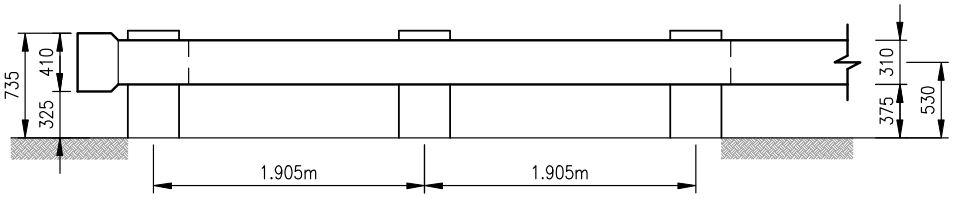

ELEVATION

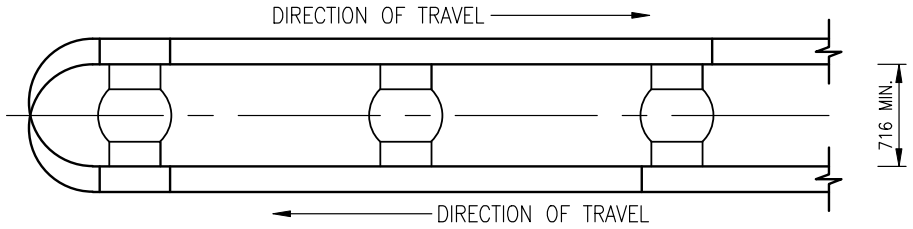

PLAN

MEDIAN BARRIER TERMINAL

SCALE 1:50

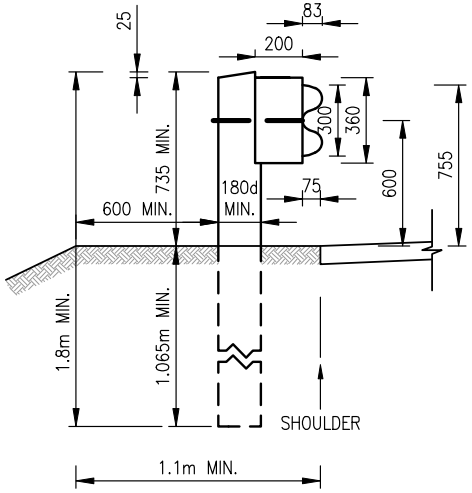

GUARDRAIL POSITION: NORMAL CONDITION

SCALE 1:30

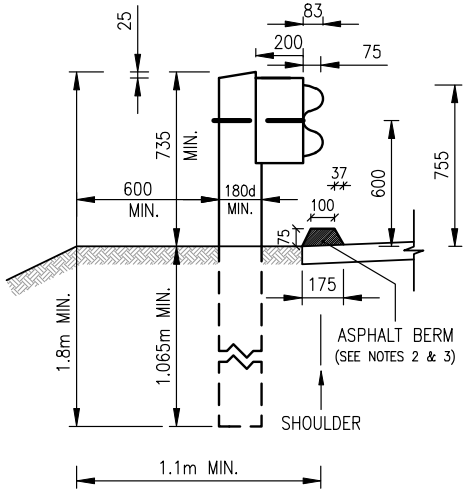

GUARDRAIL POSITION: WITH PREMIX BERM

SCALE 1:30

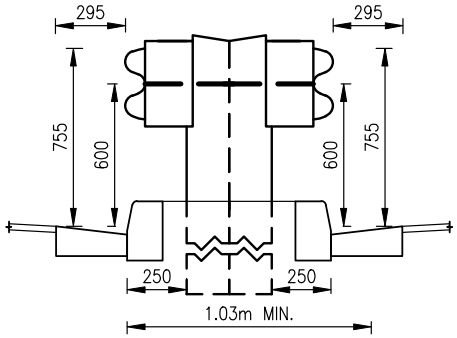

GUARDRAIL POSITION WITH KERB & CHANNEL

SCALE 1:30

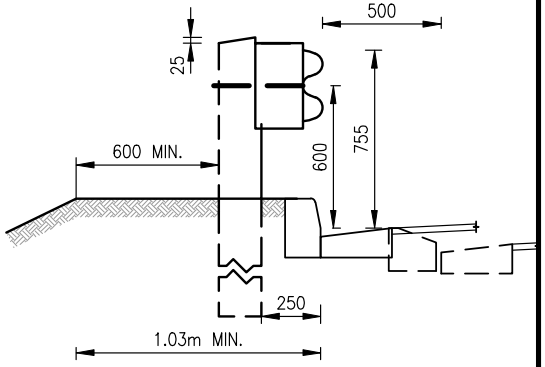

GUARDRAIL POSITION: WITH KERB & CHANNEL

SCALE 1:30

NOTES:

1. POST SPACING TO BE 1905mm FOR FIRST AND LAST THREE LENGTHS OF RAIL AND 3810mm IN BETWEEN.
2. AREA UNDER ASPHALT BERM TO BE PRIMED/TACKED.
3. IF THE LENGTH OF THE ASPHALT BERM EXCEEDS 20m, THEN 100mm GAPS TO BE PROVIDED EVERY 10m TO ACCOMMODATE STORMWATER RUNOFF.

CITY OF CAPE TOWN
ISIXEKO SASEKAPA
STAD KAAPSTAD

CITY OF CAPE TOWN
URBAN MOBILITY

TITLE

GUARDRAIL DETAILS

STANDARDS AND GUIDELINES DETAILS

SHEET 2

SCALE	PAPER
SHOWN	A4
DRAWING No.	REV
RD13.2	B

P:\CAD\R&SD\ITI_01 Design\T_1000B Standards\T_1000RS DESIGN_Roads and Stormwater\0002 Drawings_Version4.0\01 RD\RD13.2 – Guardrails (sheet 2)_RevB.dwg

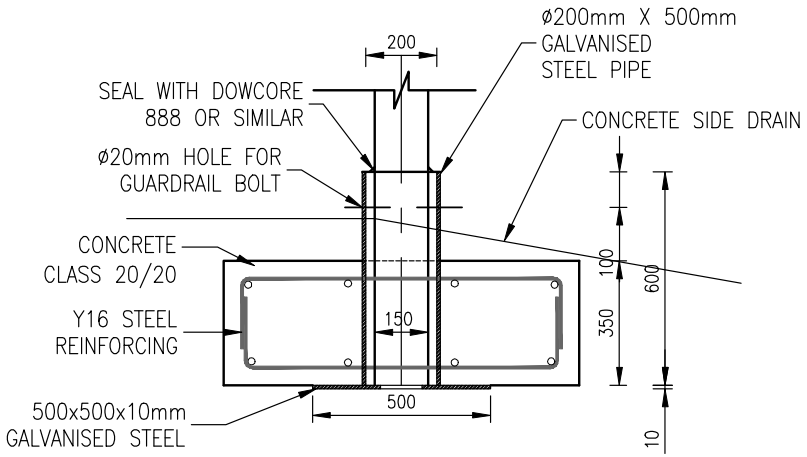

ELEVATION: GUARDRAIL SLEEVE DETAIL

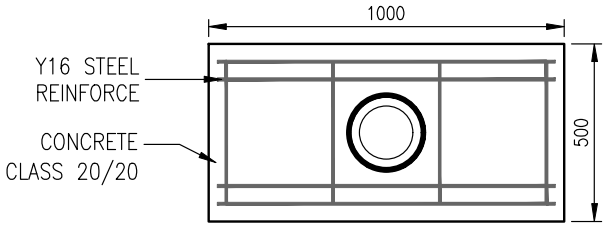

PLAN VIEW: GUARDRAIL FOUNDATION

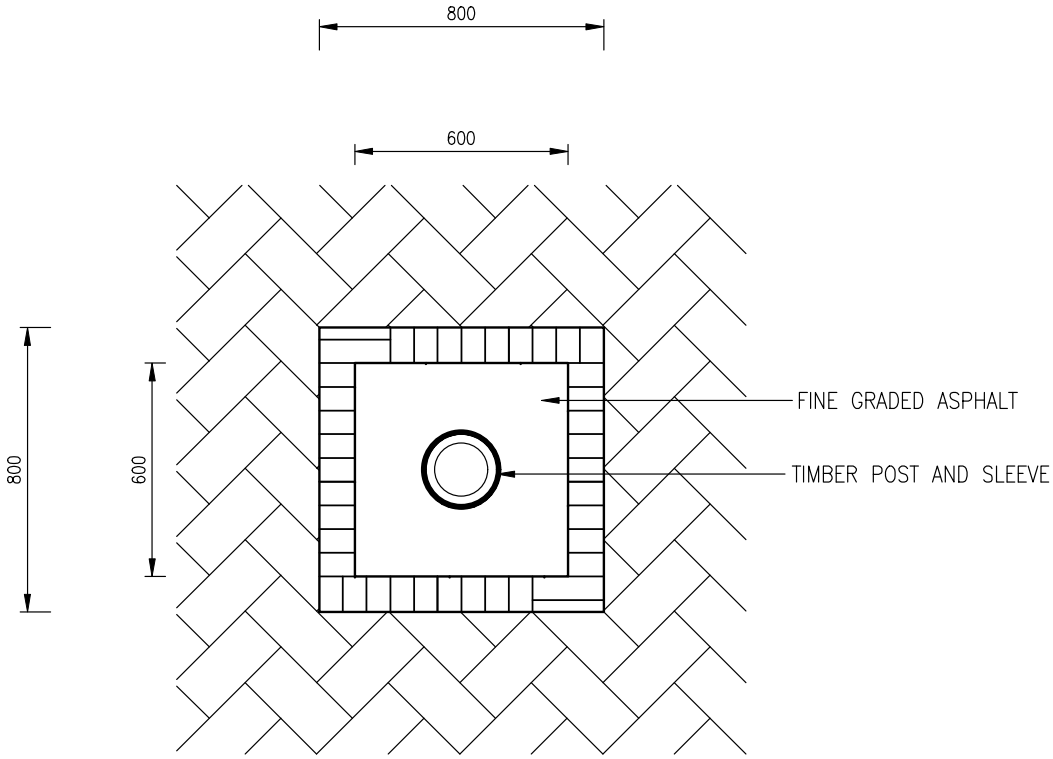

PAVED AREAS

CITY OF CAPE TOWN
ISIXEKO SASEKAPA
STAD KAAPSTAD

CITY OF CAPE TOWN
URBAN MOBILITY

TITLE

GUARDRAIL DETAILS

STANDARDS AND GUIDELINES DETAILS

SHEET 3

SCALE	PAPER
1:20	A4
DRAWING No.	REV
RD13.3	B

P:\CAD\R&SD\ITI_01 Design\T_1000B Standards\T_1000RS DESIGN_Roads and Stormwater\0002 Drawings_Version4.0\01 RD\RD13.3 – Guardrails (sheet 3)_RevB.dwg

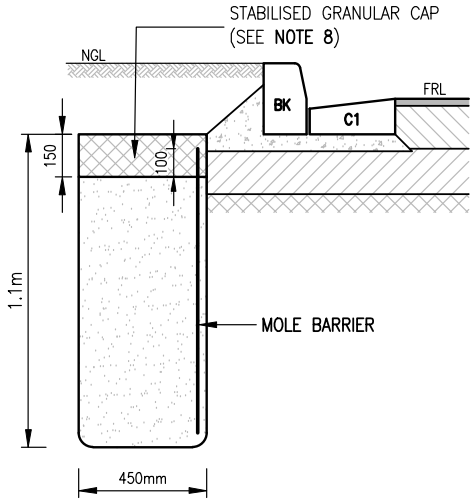

TYPE A: BEHIND KERB
(NO SIDEWALK)

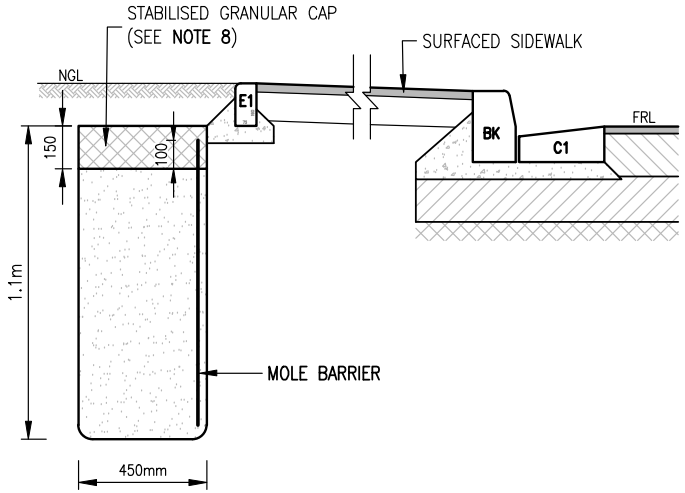

TYPE B: BEHIND EDGING
(SIDEWALK ADJACENT TO KERB)

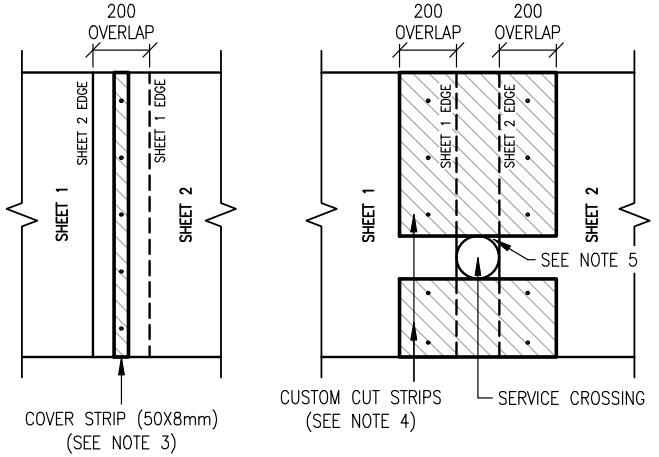

SHEET ENDS AT SERVICE CROSSING SHEET JOINTS

NOTES:

1. MOLE BARRIER SHEETS TO BE HDPE SHEETING, 2mm THICK, 1m IN HEIGHT (MINIMUM).
2. IF REQUIRED, PERFORATION SHALL BE MADE BY PUNCHING 8mm HOLES AT AN APPROXIMATE GRID SPACING OF 200x200mm.
3. SHEET ENDS:
   - 3.1. SHEET ENDS TO OVERLAP BY 200mm MINIMUM AND SECURED WITH A 50mm x 8mm COVER STRIP ON EITHER SIDE, JOINED WITH SCREWS.
   - 3.2. SHEET ENDS MAY ALSO BE BONDED BY MEANS OF PLASTIC WELDING (OR OTHER APPROVED METHODS), SUBJECT TO APPROVAL.
4. SERVICE CROSSINGS:
   - 4.1. AT SERVICE CROSSINGS, SHEETS TO BE MODIFIED TO ACCOMMODATE THE CROSSING SERVICES.
   - 4.2. CUSTOM CUT STRIPS SHALL BE USED TO JOIN THE SHEETS (200mm MINIMUM OVERLAP). STRIPS TO BE PROVIDED ON EITHER SIDE, JOINED WITH SCREWS.
5. WHEN THE SOFFIT OF THE SERVICE IS LESS THAN 1m DEEP, GAPS LARGER THAN 25mm DIAMETER TO BE PATCHED AND MORTARED OVER.
6. TRENCH WIDTH SHALL BE AT LEAST 450mm WIDE.
7. EXCAVATION TO BE BACKFILLED WITH SUITABLE GRANULAR MATERIAL, COMPACTED IN 150mm LAYERS TO 93% MOD AASHTO (100% FOR SAND) AT OPTIMUM MOISTURE CONTENT.
8. A 150mm THICK STABILISED GRANULAR CAP (5% CEMENT) SHALL BE PROVIDED AT THE UPPER PORTION OF THE TRENCH, COVERING AT LEAST THE UPPER 100mm OF THE BARRIER SHEETING. AN IN-SITU CASTED CONCRETE CAP WILL ALSO BE ACCEPTED.
9. WHERE A SUBSURFACE DRAIN IS LOCATED BEHIND THE ROADWAY KERB, THE MOLE BARRIER SHALL BE PROVIDED BEHIND THE SUBSURFACE DRAIN.

NGL: NATURAL GROUND LEVEL
FRL: FINISHED ROAD LEVEL
FSL: FINISHED SURFACE LEVEL

CITY OF CAPE TOWN
ISIXEKO SASEKAPA
STAD KAAPSTAD

CITY OF CAPE TOWN
URBAN MOBILITY

TITLE

MOLE BARRIER

STANDARDS AND GUIDELINES DETAILS

SCALE	PAPER
1:25	A4
DRAWING No.	REV
RD14	B

P:\CAD\R&SD\ITI_01 Design\T_1000B Standards\T_1000RS DESIGN_Roads and Stormwater\0002 Drawings_Version4.0\01 RD\RD14 – Mole Barrier_RevB.dwg

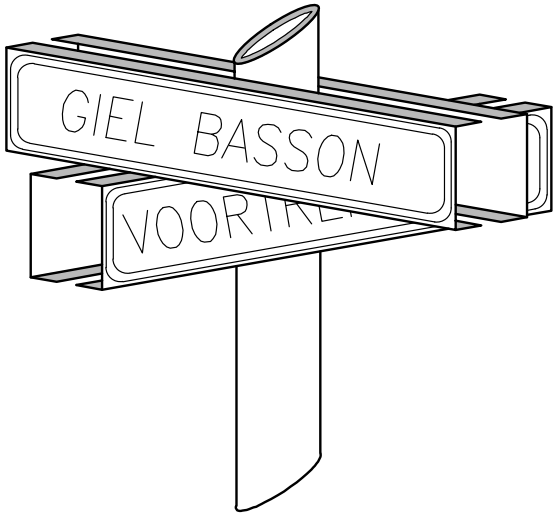

BRACKET MOUNTED PLATES
(BACK-TO-BACK)



FRONT ELEVATION



TOP MOUNTED PLATES

NOTES:

NAME PLATES
1. COLOUR: SEMI-MATT BLACK ON WHITE CLASS 3 BACKGROUND.
2. 1.4mm CHROMADEK PLATE, BENT TOP AND BOTTOM WITH A 25mm BEND FOR STRENGTHENING.

BRACKET MOUNTED PLATES
3. GALVANISED P4000 CHANNEL SECTION STAGGERED ON THE REAR OF EACH SIGN FOR CLAMPING TO SUPPORT (BRACKETS).
4. 60mm OR 76mm DIAMETER GALVANISED POLE, UNLESS APPROVED OTHERWISE.

TOP MOUNTED PLATES
5. GALVANISED MILD STEEL PIPE FITTING FOR MOUNTING ONTO A 60mm DIAMETER GALVANISED POLE.
6. THE FITTING IS RIVETED TO THE BOTTOM LIP OF THE SIGN AS INDICATED.
7. A CROSS IS SUPPLIED IN THE EVENT OF 2 SIGNS TO BE SUPPORTED ON THE SAME SUPPORT.

GENERAL
8. REFER TO DRAWING RM4 FOR ROAD SIGN SUPPORT INSTALLATION DETAILS.
9. LETTERING SHALL BE IN ACCORDANCE WITH SADC-RTSM VOL1&4. THE TYPEFACE SHALL BE DIN 1451 PART 2, STYLES "A" AND "B".

CITY OF CAPE TOWN
ISIXEKO SASEKAPA
STAD KAAPSTAD

CITY OF CAPE TOWN
URBAN MOBILITY

TITLE

STREET NAME PLATE

STANDARDS AND GUIDELINES DETAILS

SCALE	PAPER
1:10	A4
DRAWING No.	REV
RD15.1	B

P:\CAD\R&SD\ITI_01 Design\T_1000B Standards\T_1000RS DESIGN_Roads and Stormwater\0002 Drawings_Version4.0\01 RD\RD15.1 – Street Name Plate_RevB.dwg

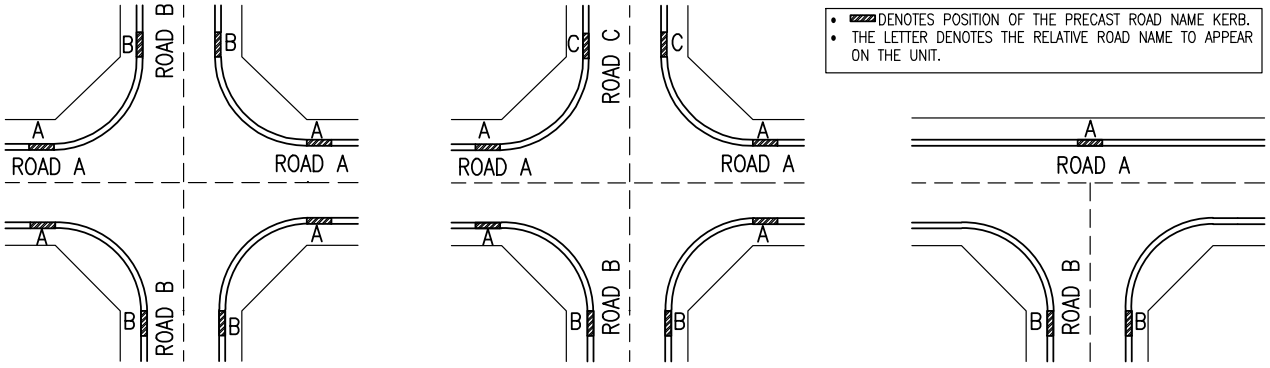

2 ROAD NAMES

3 ROAD NAMES

ROAD NAMES OPPOSITE INTERSECTING ROAD

PLAN VIEW SHOWING ROAD NAME KERB POSITIONS

N.T.S

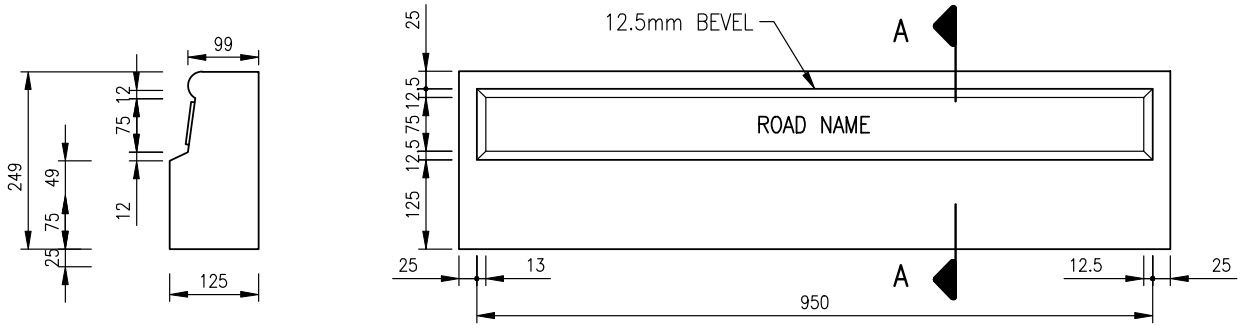

SECTION A–A

FRONT ELEVATION

TYPICAL ROAD NAME KERB

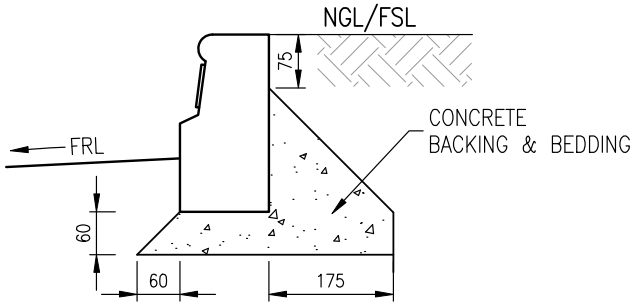

NAME KERB INSTALLATION

NOTES:

1. ROAD NAMES KERBS SHALL BE INSTALLED IN LINE WITH THE EXISTING KERBLINE.
2. ALL UNITS MUST BE LAID WITH A CLASS 20/20 CONCRETE BEDDING/BACKING, UNLESS SHOWN OTHERWISE, ON SUBGRADE/SUBBASE COMPACTED TO THE REQUIRED SPECIFICATIONS.
3. RECESSED LETTERS PAINTED BLACK AND THE REMAINDER OF THE KERB TO HAVE A WHITE BACKGROUND.
4. ALTERNATIVELY, ROAD NAMES MAY BE PAINTED ON THE KERBLINE BY MEANS OF A STENCIL. THE LETTERS SHALL BE PAINTED BLACK AND THE REMAINDER OF THE KERB TO HAVE A WHITE BACKGROUND.
5. LETTERING SHALL HAVE A HEIGHT OF 75mm AND SHALL BE IN TYPEFACE DIN 1451 PART 2, STYLES "A" AND "B".

NGL: NATURAL GROUND LEVEL
FRL: FINISHED ROAD LEVEL
FSL: FINISHED SURFACE LEVEL

CITY OF CAPE TOWN
ISIXEKO SASEKAPA
STAD KAAPSTAD

CITY OF CAPE TOWN
URBAN MOBILITY

TITLE

ROAD NAME AND KERB DETAILS

STANDARDS AND GUIDELINES DETAILS

SCALE	PAPER
1:10	A4
DRAWING No.	REV
RD15.2	B

P:\CAD\R&SD\TL_01 Design\T_1000B Standards\T_1000RS DESIGN_Roads and Stormwater\0002 Drawings_Version4.0\01 RD\RD15.2 – Road Name and Kerb Details_RevB.dwg

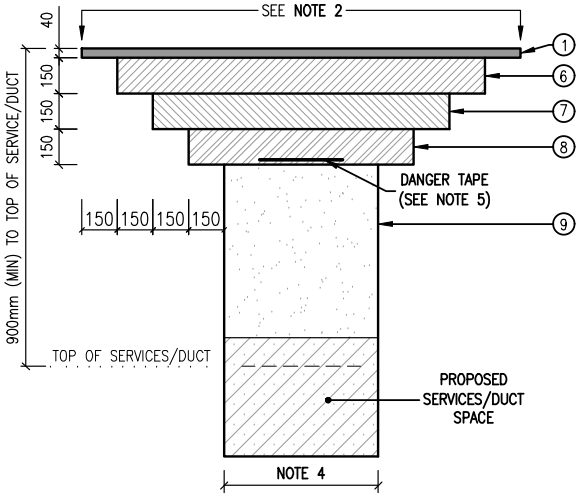

TYPE A1
CLASS 5B–D ROADS
(LOCAL RESIDENTIAL STREETS)

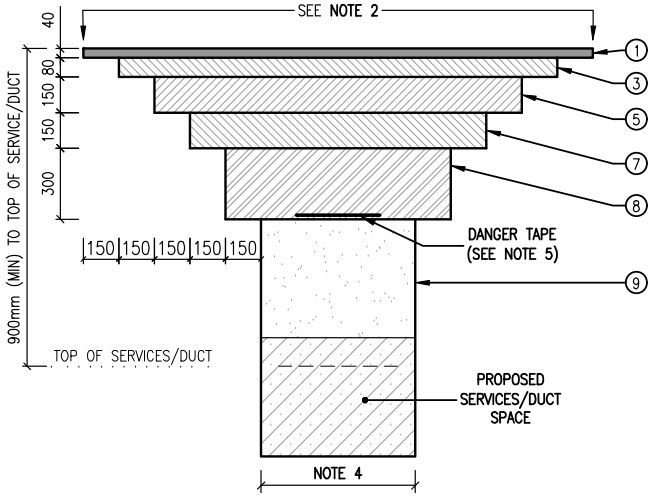

TYPE A2
CLASS 5A & 4 ROADS
(LOCAL COMMERCIAL STREETS & COLLECTORS)

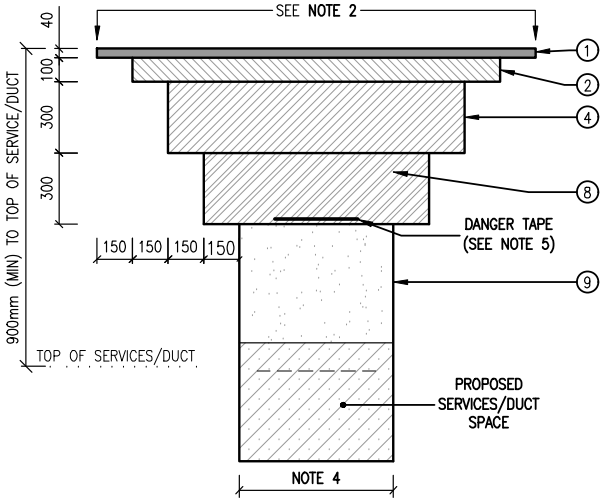

TYPE A3
CLASS 2 & 3 ROADS
(ARTERIALS)

NOTES:

1. THE SPECIFIED LAYER WORKS SHOULD BE CONSIDERED AS A GUIDELINE. ONCE THE EXISTING LAYER WORKS OF THE ROADWAY HAVE BEEN DETERMINED, THE ENGINEER SHALL SUBMIT A FINAL LAYER WORKS REINSTATEMENT PROPOSAL TO THE APPROVAL AUTHORITY.
2. ASPHALT SURFACE LAYERS SHALL BE MECHANICALLY SAW CUT PRIOR TO THE BREAKING UP OF THE EXISTING LAYERS AND AGAIN BEFORE THE PLACING OF THE FINAL ASPHALT LAYER.
3. ASPHALT JOINTS:
   - 3.1. JOINT SHALL BE CUT IN STRAIGHT LINES, PARALLEL OR AT RIGHT ANGLES TO THE CENTERLINE, USING A MECHANICAL SAW CUT.
   - 3.2. LONGITUDINAL ASPHALT JOINTS SHALL NOT BE POSITIONED IN ANY VEHICLE WHEEL–PATHS. JOINTS SHALL BE POSITIONED ON THE LANE MARKING (OR MAX. 150mm OFFSET THEREFROM)..
   - 3.3. CUT EDGES OF ASPHALT JOINTS SHALL RECEIVE A COAT OF RUBBERIZED BITUMEN EMULSION ALONG THE ENTIRE VERTICAL FACE, PRIOR TO THE ASPHALT BEING PLACED.
   - 3.4. REFER TO **SECTION 8.5.3** FOR FURTHER DETAILS.
   - 3.5. ALL "COLD" ASPHALT JOINTS TO BE PROPERLY SEALED WITH A WATERPROOFING SEALANT TO PREVENT THE INGRESS OF WATER. THE SEALANT SHALL BE UNDILUTED AND BRUSH–APPLIED AT 0.71L/m^2, AT A MINIMUM WIDTH OF 100mm.
4. TRENCH WIDTH SHALL DEPEND ON THE REQUIRED SERVICE TO BE INSTALLED.
   - 4.1. FOR STORMWATER, SEWER AND WATER SERVICES, SUFFICIENT SIDE ALLOWANCE SHALL BE PROVIDED, TO ENSURE ADEQUATE COMPACTION.
   - 4.2. FOR SERVICE DUCTS, REFER TO **CHAPTER 13** FOR THE VARIOUS DUCT TYPE REQUIREMENTS AND SPECIFICATIONS.
5. THE PROVISION OF DANGER TAPE MAY BE REQUIRED FOR ELECTRICAL AND TELECOMMUNICATION SERVICES. PROVISION THEREOF TO BE DISCUSSED/CONFIRMED WITH THE SERVICE OWNER.
6. REINSTATEMENTS NOT COVERED IN THIS DRAWING SHALL BE DISCUSSED AND APPROVED BY THE APPROVAL AUTHORITY.

ROAD LAYER WORKS:

1. 40mm CONTINUOUSLY GRADED ASPHALT SURFACING (93% MAX. VOIDLESS DENSITY)
2. 100mm CONTINUOUSLY GRADED BTB (93% MAX. VOIDLESS DENSITY)
3. 80mm CONTINUOUSLY GRADED BTB (93% MAX. VOIDLESS DENSITY)
4. 300mm C3/C4 CEMENT STABILIZED SUBBASE, CONSTRUCTED IN TWO LAYERS OF 150mm (97% MDD)
5. 150mm G3 BASE (100% MDD)
6. 150mm G4 BASE (100% MDD)
7. 150mm G5 SUBBASE (98% MDD)
8. G7 SELECTED LAYER, CONSTRUCTED IN 150mm LAYERS (95% MDD, 100% FOR SAND) (or 10mm/BLOW FOR DCP TESTING)
9. EXCAVATED MATERIAL (IF SUITABLE – MINIMUM G9 QUALITY), COMPACTED IN 150mm LAYERS (93% MDD, 100% FOR SAND) (or ≤20mm/BLOW FOR DCP TESTING)

NOTES: AGGREGATE SAND OR GRANULAR MATERIAL, ALL OF NON–CONHESIVE NATURE AND FREE FROM ALL ORGANIC MATERIAL OF WHICH THE GRADING ANALYSES SHOWS 100% PASSING A 13,2MM SIEVE AND NOT MORE THAN 5% PASSING A 0,075MM SIEVE.
BINDER TYPE FOR ASPHALT LAYERS (SURFACING & BASE) SHALL BE SPECIFIED IN FINAL PROPOSAL.

ROAD CLASSES

CLASS 2 : MAJOR ARTERIAL
CLASS 3 : MINOR ARTERIAL
CLASS 4 : COLLECTOR
CLASS 5A : LOCAL COMMERCIAL STREET
CLASS 5B–D: LOCAL RESIDENTIAL STREETS

SHEET INDEX:

SHEET 1: ROADWAY REINSTATEMENT SPECIFICATIONS
SHEET 2: PEDESTRIAN FOOTWAY REINSTATEMENT SPECIFICATIONS

CITY OF CAPE TOWN
ISIXEKO SASEKAPA
STAD KAAPSTAD

CITY OF CAPE TOWN
URBAN MOBILITY

TITLE

REINSTATEMENT OF SHALLOW TRENCHES IN ROAD RESERVES
TRENCHES IN ROADWAYS

STANDARDS AND GUIDELINES DETAILS

SHEET 1

SCALE	PAPER
N.T.S.	A4
DRAWING No.	REV
RD16.1	D

P:\CAD\R&SD\ITI_01 Design\T_1000B Standards\T_1000RS DESIGN_Roads and Stormwater\0002 Drawings_Version4.0\01 RD\RD16.1 – Trench Reinstatement Specifications_RevD.dwg

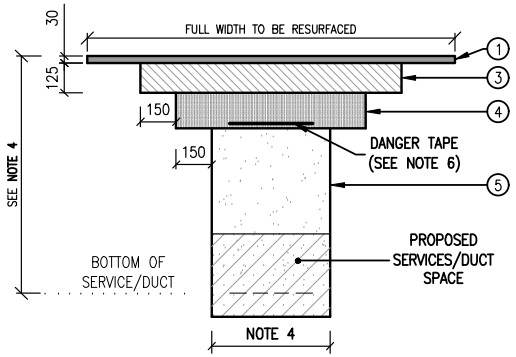

TYPE B1:
PEDESTRIAN FOOTWAY
(ASPHALT)

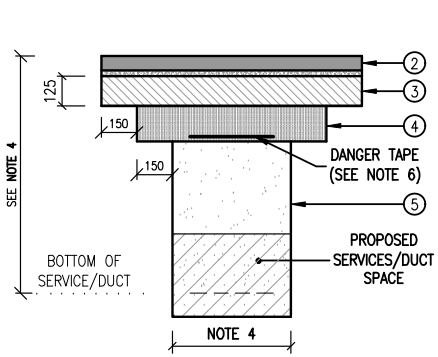

TYPE B2:
PEDESTRIAN FOOTWAY
(SEGMENTED PAVING)

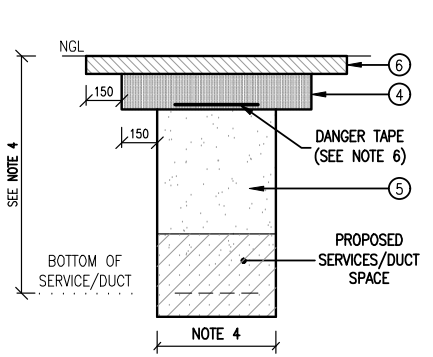

TYPE B3:
STABILISED GRAVEL WC

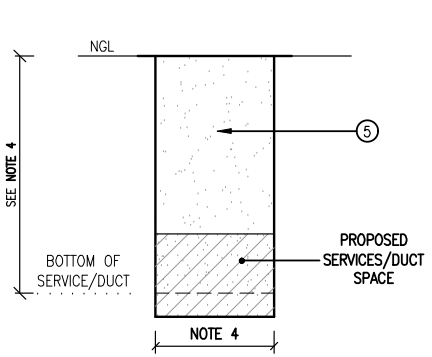

TYPE B4:
UNMADE VERGE

NOTES:

1. THE SPECIFIED LAYER WORKS SHOULD BE CONSIDERED AS A GUIDELINE. ONCE THE EXISTING LAYER WORKS OF THE ROADWAY HAVE BEEN DETERMINED, THE ENGINEER SHALL SUBMIT A FINAL LAYER WORKS REINSTATEMENT PROPOSAL TO THE APPROVAL AUTHORITY.
2. WHERE THE WIDTH OF THE FOOTWAY IS LESS THAN 2m, THE ENTIRE WIDTH OF THE SURFACING SHALL BE REPLACED (ONLY APPLICABLE TO ASPHALT FOOTWAYS).
3. ASPHALT JOINTS:
   - 3.1. ALL JOINTS SHALL BE SAW CUT PRIOR TO THE PLACING OF THE NEW ASPHALT LAYER.
   - 3.2. ALL JOINTS SHALL BE CUT PERPENDICULAR ACROSS THE FOOTWAY (NO DIAGONAL JOINTS SHALL BE ACCEPTED).
   - 3.3. REFER TO **SECTION 8.5.3** FOR FURTHER DETAILS.
   - 3.4. ALL "COLD" ASPHALT JOINTS TO BE PROPERLY SEALED WITH A WATERPROOFING SEALANT TO PREVENT THE INGRESS OF WATER. THE SEALANT SHALL BE UNDILUTED AND BRUSH-APPLIED AT 0.71L/m^2, AT A MINIMUM WIDTH OF 100mm.
4. TRENCH WIDTH SHALL DEPEND ON THE REQUIRED SERVICE TO BE INSTALLED.
   - 4.1. FOR STORMWATER, SEWER AND WATER SERVICES, SUFFICIENT SIDE ALLOWANCE SHALL BE PROVIDED, TO ENSURE ADEQUATE COMPACTION.
   - 4.2. FOR SERVICE DUCTS, REFER TO **CHAPTER 13** FOR THE VARIOUS DUCT TYPE REQUIREMENTS AND SPECIFICATIONS.
5. TRENCH DEPTH:
   - 5.1. SHALL BE LIMITED TO 1m FOR TELECOMMUNICATION SERVICES.
   - 5.2. WHERE UNSTABLE GROUND CONDITIONS EXIST, SHORING/PROTECTION SHOULD BE APPLIED IN ORDER TO PROTECT ADJACENT STRUCTURES.
6. THE PROVISION OF DANGER TAPE MAY BE REQUIRED FOR ELECTRICAL AND TELECOMMUNICATION SERVICES. THE PROVISION THEREOF TO BE DISCUSSED/CONFIRMED WITH THE SERVICE OWNER.
7. REINSTATEMENTS NOT COVERED IN THIS DRAWING SHALL BE DISCUSSED AND APPROVED BY THE APPROVAL AUTHORITY.

PEDESTRIAN FOOTWAY LAYER WORKS:

1. 30mm CONTINUOUSLY FINE GRADED ASPHALT SURFACING
2. CONCRETE/CLAY PAVING BLOCKS ON 20mm SAND
3. 125mm G5 SUBBASE COMPACTED TO 98% MDD (or 5mm/BLOW FOR DCP TESTING)
4. 150mm G7 COMPACTED COMPACTED TO 95% MDD (100% FOR SAND) (or 10mm/BLOW FOR DCP TESTING)
5. EXCAVATED MATERIAL (IF SUITABLE – MINIMUM G9 QUALITY), COMPACTED IN 150mm LAYERS (93% MDD, 100% FOR SAND) (or 20mm/BLOW FOR DCP TESTING)
6. 75mm STABILISED GRAVEL WEARING COURSE (3–4% CEMENT BY MASS)

NOTES: AGGREGATE SAND OR GRANULAR MATERIAL, ALL OF NON-CONHESIVE NATURE AND FREE FROM ALL ORGANIC MATERIAL OF WHICH THE GRADING ANALYSES SHOWS 100% PASSING A 13,2MM SIEVE AND NOT MORE THAN 5% PASSING A 0,075MM SIEVE.

BINDER TYPE FOR ASPHALT SURFACING SHALL BE SPECIFIED IN FINAL PROPOSAL.

SHEET INDEX:

SHEET 1: ROADWAY REINSTATEMENT SPECIFICATIONS
SHEET 2: PEDESTRIAN FOOTWAY REINSTATEMENT SPECIFICATIONS

CITY OF CAPE TOWN
ISIXEKO SASEKAPA
STAD KAAPSTAD

CITY OF CAPE TOWN
URBAN MOBILITY

TITLE

REINSTATEMENT OF SHALLOW TRENCHES IN ROAD RESERVES
TRENCHES IN PEDESTRIAN FOOTWAYS AND VERGES

STANDARDS AND GUIDELINES DETAILS

SHEET 2

SCALE	PAPER
N.T.S.	A4
DRAWING No.	REV
RD16.2	D

P:\CAD\R&SD\ITI_01 Design\T_1000B Standards\T_1000RS DESIGN_Roads and Stormwater\0002 Drawings_Version4.0\01 RD\RD16.2 – Trench Reinstatement Specifications_RevD.dwg

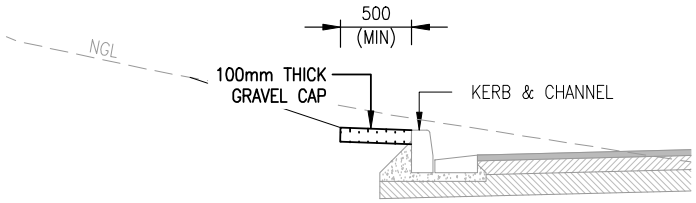

CUT SCENARIO

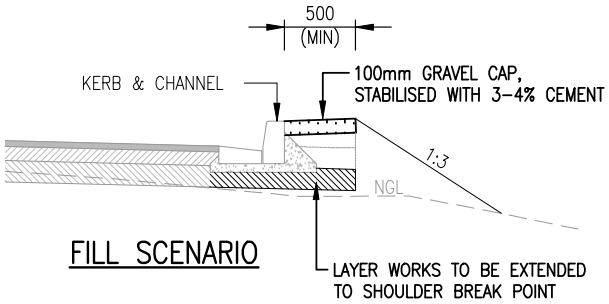

FILL SCENARIO

PROTECTION OF ROAD EDGE

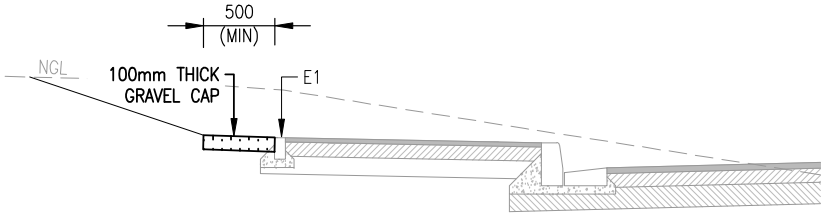

CUT SCENARIO

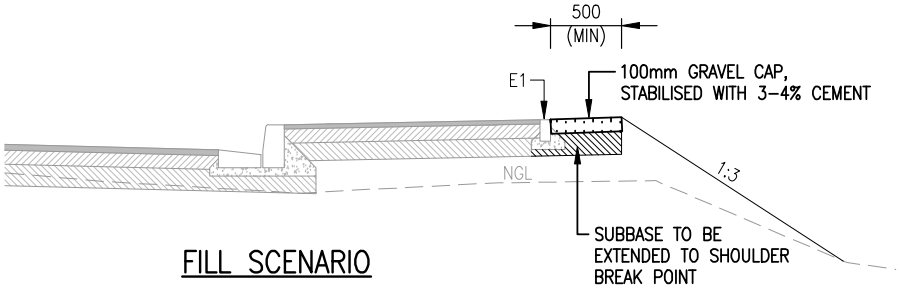

FILL SCENARIO

PROTECTION OF FOOTWAY

NOTES:

1. WHERE ROADS OR FOOTWAYS ARE CONSTRUCTED IN FILL, A 500mm WIDE GRAVEL CAP, STABILISED WITH 3–4% CEMENT, SHALL BE CONSTRUCTED BEHIND THE ROAD EDGE OR BACK OF FOOTWAY, AT A DEPTH OF 100mm.
2. WHERE ROADS OR FOOTWAYS ARE CONSTRUCTED IN CUT, A 500mm WIDE GRAVEL CAP SHALL BE CONSTRUCTED BEHIND THE ROAD EDGE OR BACK OF FOOTWAY, AT A DEPTH OF 100mm.
3. ROADWAY AND FOOTWAY LAYERS WORKS SHALL BE DESIGNED IN ACCORDANCE WITH CHAPTER 8.

NGL: NATURAL GROUND LEVEL
FRL: FINISHED ROAD LEVEL
FSL: FINISHED SURFACE LEVEL

CITY OF CAPE TOWN
ISIXEKO SASEKAPA
STAD KAAPSTAD

CITY OF CAPE TOWN
URBAN MOBILITY

TITLE

TYPICAL PROTECTION DETAIL OF ROAD EDGE OR BACK OF FOOTWAY

STANDARDS AND GUIDELINES DETAILS

SCALE	PAPER
1:50	A4
DRAWING No.	REV
RD17	B

P:\CAD\R&SD\ITI_01 Design\T_1000B Standards\T_1000RS DESIGN_Roads and Stormwater\0002 Drawings_Version4.0\01 RD\RD17 – Protection Detail for Road Edge & Footway_RevB.dwg

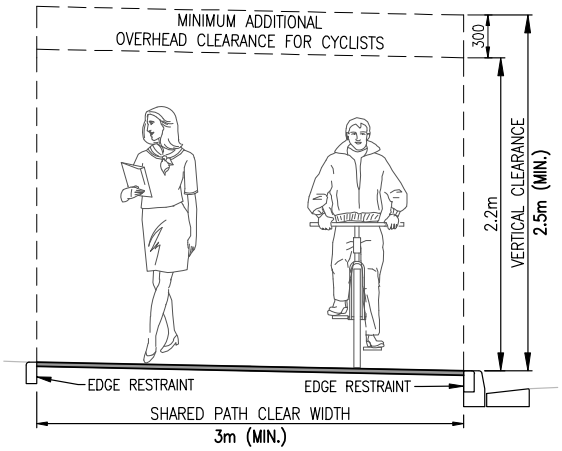

ONE-WAY CYCLIST MOVEMENT

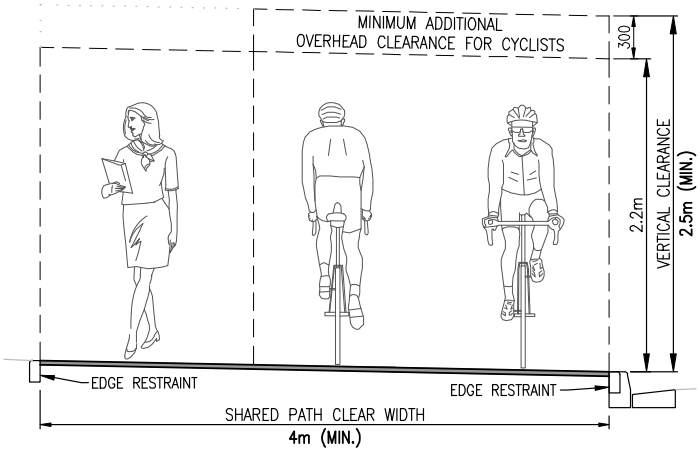

TWO-WAY CYCLIST MOVEMENT

SHARED PEDESTRIAN-CYCLE FACILITIES

TABLE 2
ONE-WAY CYCLE PATH WIDTH

CYCLE CLASS	MIN. WIDTH
CLASS 1	1.5m
CLASS 2	1.5m
CLASS 3 (60KM/H ROAD SPEED LIMIT)	1.5m
CLASS 3 (80KM/H ROAD SPEED LIMIT)	1.8m

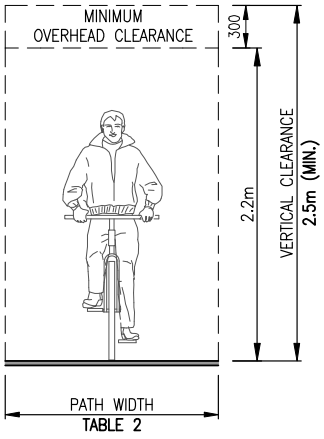

ONE-WAY CYCLE PATH

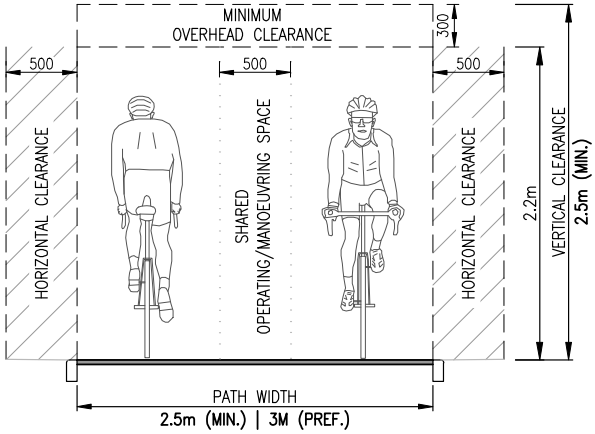

TWO-WAY CYCLE PATH

CYCLE FACILITIES

TABLE 1
PEDESTRIAN PATH WIDTHS

ROAD CLASS	MIN. WIDTH
CLASS 2: MAJOR ARTERIAL	2m
CLASS 3: MINOR ARTERIAL	2m
CLASS 4: COLLECTOR	1.8m
CLASS 5A: LOCAL COM + IND STREET	1.8m
CLASS 5B: LOCAL RES STREET (12m RR)	1.8m
CLASS 5C-D: LOCAL RES STREET (8/10m RR)	1.5m

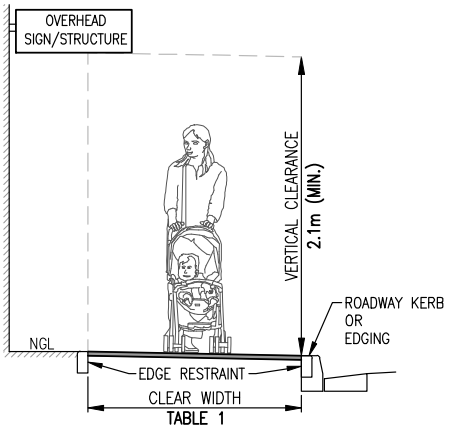

PEDESTRIAN FOOTWAY

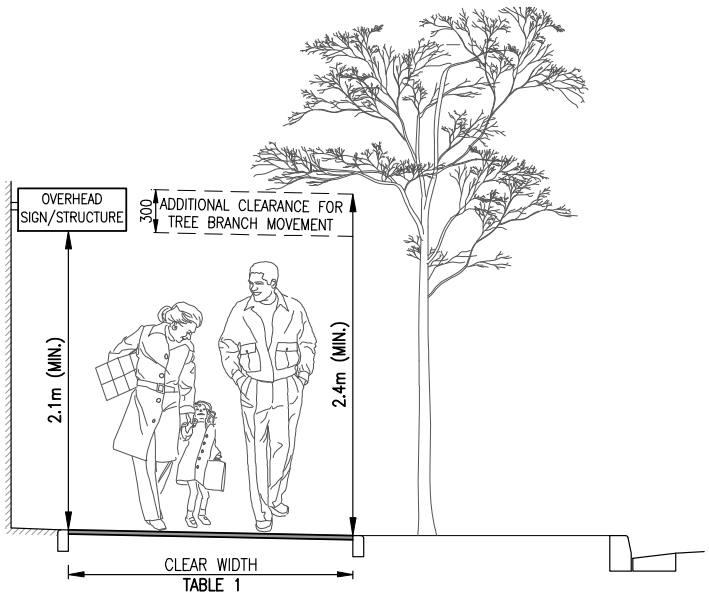

PEDESTRIAN FOOTWAY WITH OVERHANGING TREE

PEDESTRIAN FACILITIES

NOTES:

1. DRAWING TO BE READ IN CONJUNCTION WITH **SECTION 5.3 & 5.4.**

CITY OF CAPE TOWN
ISIXEKO SASEKAPA
STAD KAAPSTAD

CITY OF CAPE TOWN
URBAN MOBILITY

TITLE

NON-MOTORISED TRANSPORT FACILITIES

WIDTHS AND CLEARANCES

STANDARDS AND GUIDELINES DETAILS

SCALE	PAPER
1:50	A4
DRAWING No.	REV
RD18.1	A

P:\CAD\R&SD\TL_01 Design\T_1000B Standards\T_1000RS DESIGN_Roads and Stormwater\0002 Drawings_Version4.0\01 RD\RD18.1 - NMT Facilities_RevA.dwg

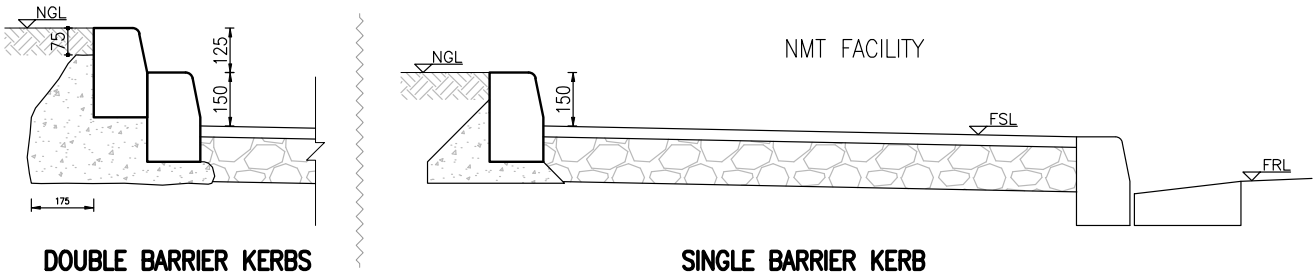

DOUBLE BARRIER KERBS

SINGLE BARRIER KERB

FULL HEIGHT BARRIER KERB AS EDGE RESTRAINT

1:20

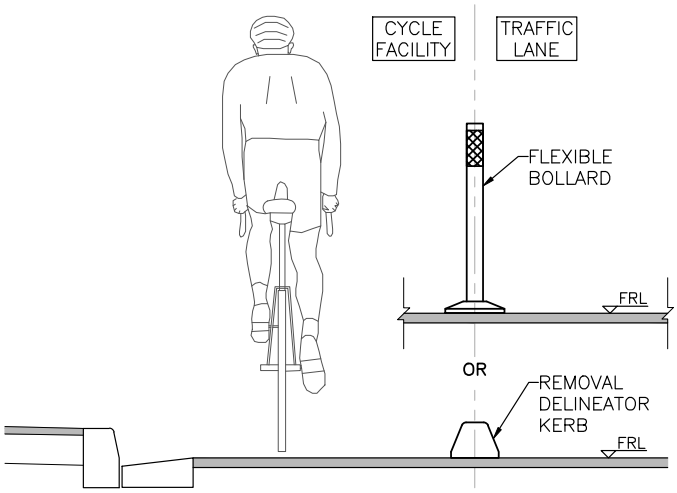

ADJACENT TRAFFIC LANE

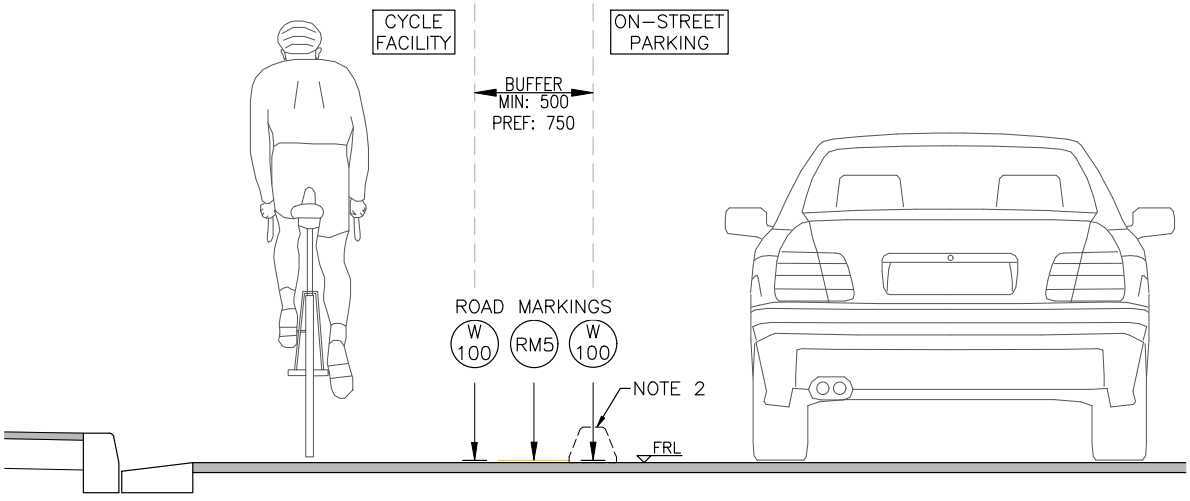

ADJACENT ON–STREET PARKING

PROTECTED AT–GRADE CYCLE FACILITIES

1:30

NOTES:

1. DRAWING TO BE READ IN CONJUNCTION WITH **SECTION 5.4.5.**
2. DELINEATOR KERB CAN BE PROVIDED AS ADDITIONAL PARKING DELINEATION.

NGL: NATURAL GROUND LEVEL
FRL: FINISHED ROAD LEVEL
FSL: FINISHED SURFACE LEVEL

CITY OF CAPE TOWN
ISIXEKO SASEKAPA
STAD KAAPSTAD

CITY OF CAPE TOWN
URBAN MOBILITY

TITLE

NON-MOTORISED TRANSPORT FACILITIES

MISCELLANEOUS APPLICATION DETAILS 1

STANDARDS AND GUIDELINES DETAILS

SCALE	PAPER
SHOWN	**A4**
DRAWING No.	REV
RD18.2	**A**

P:\CAD\R&SD\TL_01 Design\T_1000B Standards\T_1000RS DESIGN_Roads and Stormwater\0002 Drawings_Version4.0\01 RD\RD18.2 – NMT Facilities–Misc_RevA.dwg

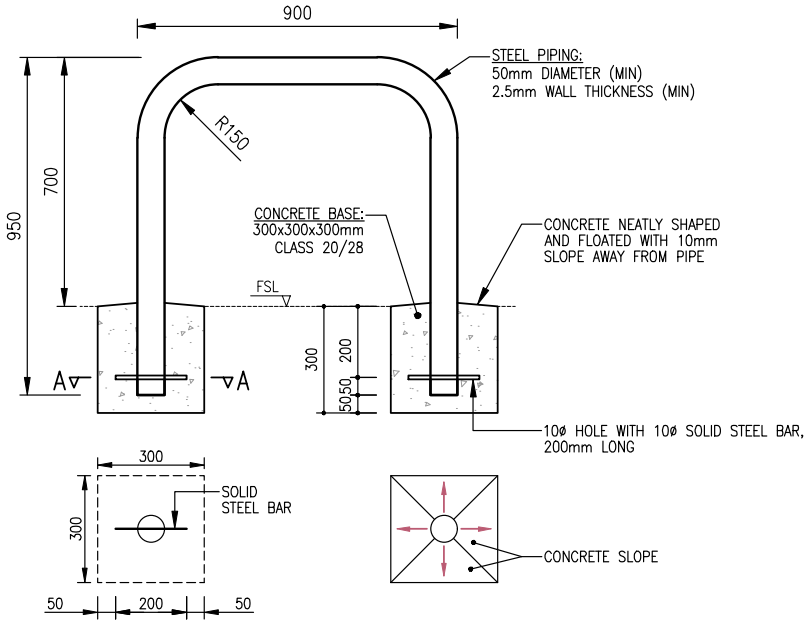

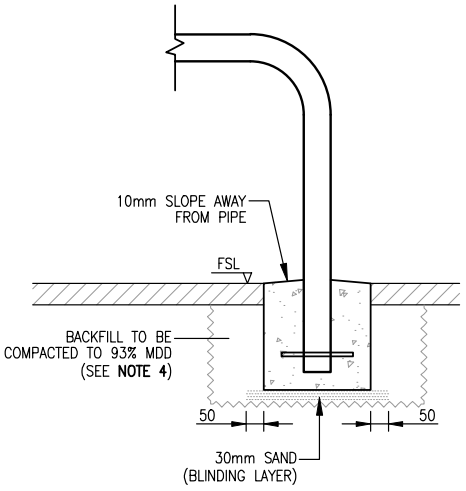

DETAIL A: PIPE AND BASE

DETAIL B: INSTALLATION

MANUFACTURING AND INSTALLATION DETAILS

SCALE 1:20

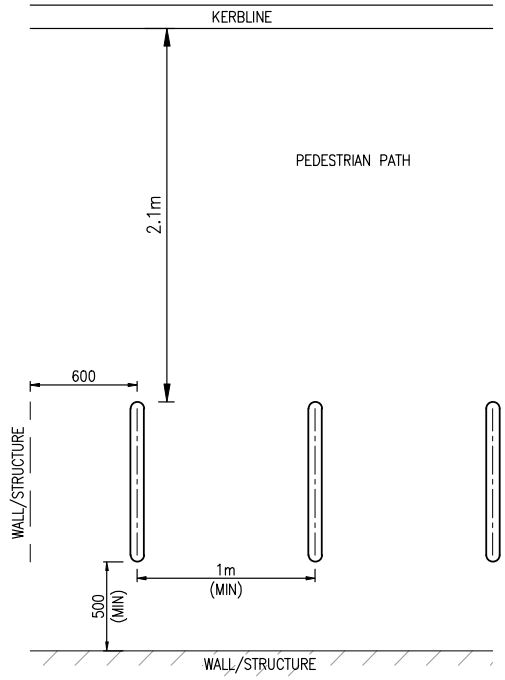

90° TO PEDESTRIAN PATH AND ROADWAY

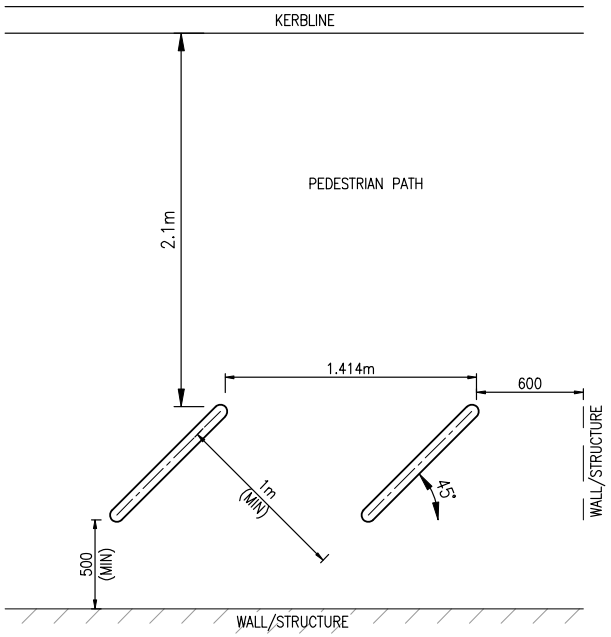

45° TO PEDESTRIAN PATH AND ROADWAY

SPACING AND ORIENTATION OF BICYCLE STANDS

N.T.S.

NOTES:

1. ALL DIMENSIONS IN mm, UNLESS SHOWN OTHERWISE.
2. ALL STEEL SHALL BE HOT–DIPPED GALVANISED.
3. IN HIGH THEFT AREAS, THE PIPING AND CONCRETE BASES SHALL BE CONSTRUCTED OFF–SITE (DETAIL A). CONCRETE SHALL BE LEFT TO CURE FOR A MINIMUM OF 7 DAYS. THEREAFTER, INSTALLATION SHALL BE CARRIED OUT, AS A COMPLETE UNIT, AS PER DETAIL B.
4. WHERE BICYCLE STANDS ARE CONSTRUCTED AS PART OF NEW NMT FACILITIES, THE LAYERS ADJACENT TO THE CONCRETE SLAB SHALL BE THE SAME AS THE PAVEMENT STRUCTURE OF THE NMT FACILITY.

CITY OF CAPE TOWN
ISIXEKO SASEKAPA
STAD KAAPSTAD

CITY OF CAPE TOWN
URBAN MOBILITY

TITLE

BICYCLE STAND

STANDARDS AND GUIDELINES DETAILS

SCALE	PAPER
SHOWN	A4
DRAWING No.	REV
RD19	B

P:\CAD\R&SD\TL_01 Design\T_1000B Standards\T_1000RS DESIGN_Roads and Stormwater\0002 Drawings_Version4.0\01 RD\RD19 – Bicycle Stand_RevB.dwg

Detail Drawings

ROAD MARKINGS & ROAD SIGNS

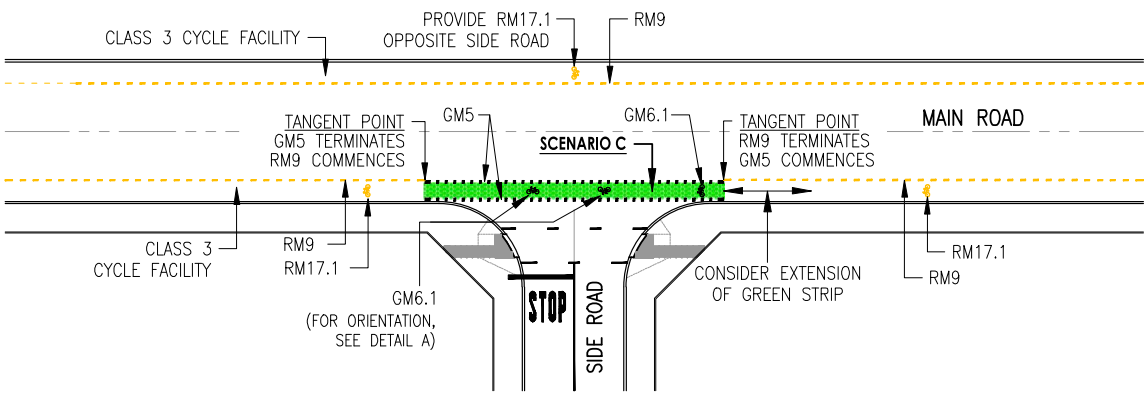

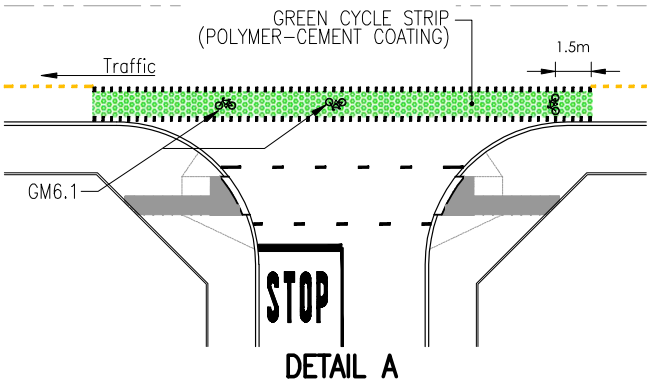

DETAIL A

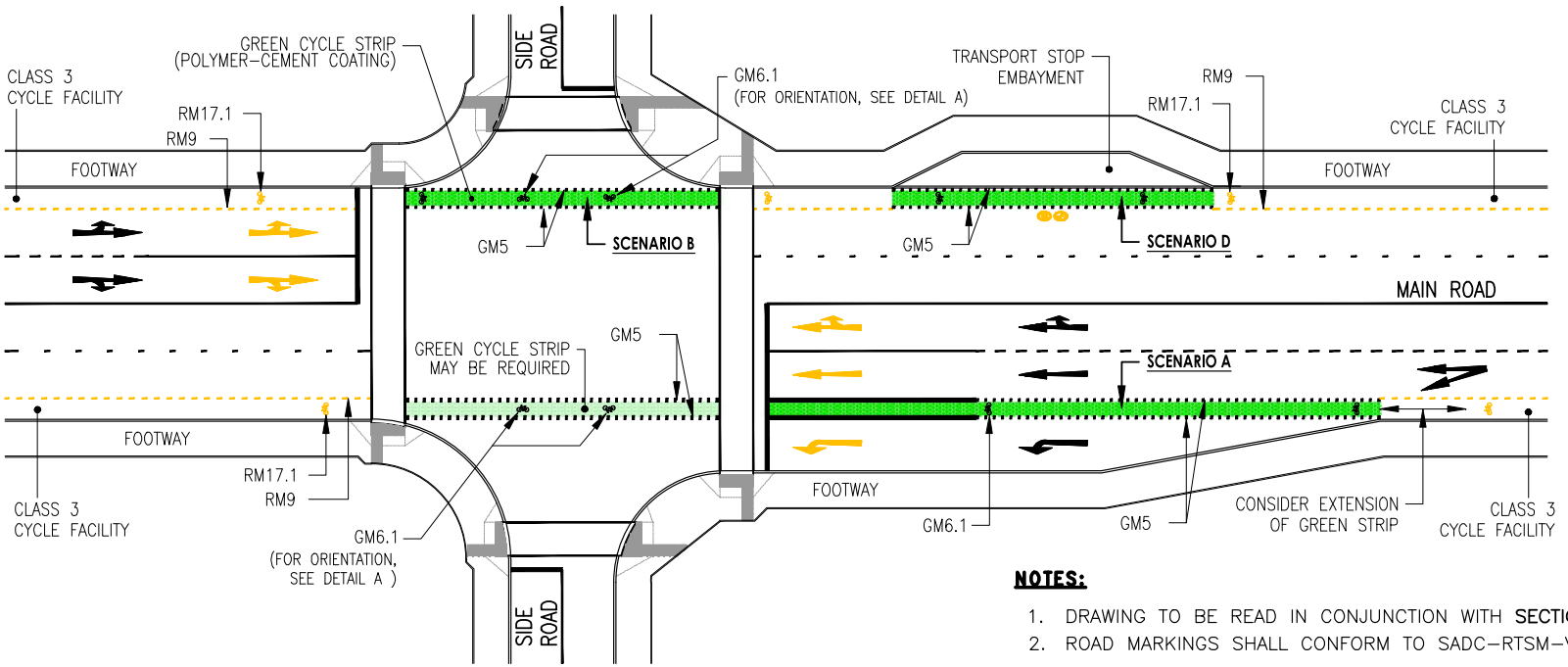

NOTES:

1. DRAWING TO BE READ IN CONJUNCTION WITH **SECTION 5.4.4.1.**
2. ROAD MARKINGS SHALL CONFORM TO SADC-RTSM-VOL1 AND SARTSM-VOL2

CITY OF CAPE TOWN
ISIXEKO SASEKAPA
STAD KAAPSTAD

CITY OF CAPE TOWN
URBAN MOBILITY

TITLE

ACCOMMODATION OF CYCLISTS: PROVISION OF GREEN CYCLE STRIPS AT INTERSECTIONS

STANDARDS AND GUIDELINES DETAILS

SCALE	PAPER
N.T.S.	A4
DRAWING No.	REV
RM1.1	B

P:\CAD\R&SD\ITI_01 Design\T_1000B Standards\T_1000RS DESIGN_Roads and Stormwater\0002 Drawings_Version4.0\02 RM\RM1.1 - Green Cycle Facilities - Intersections_RevB.dwg

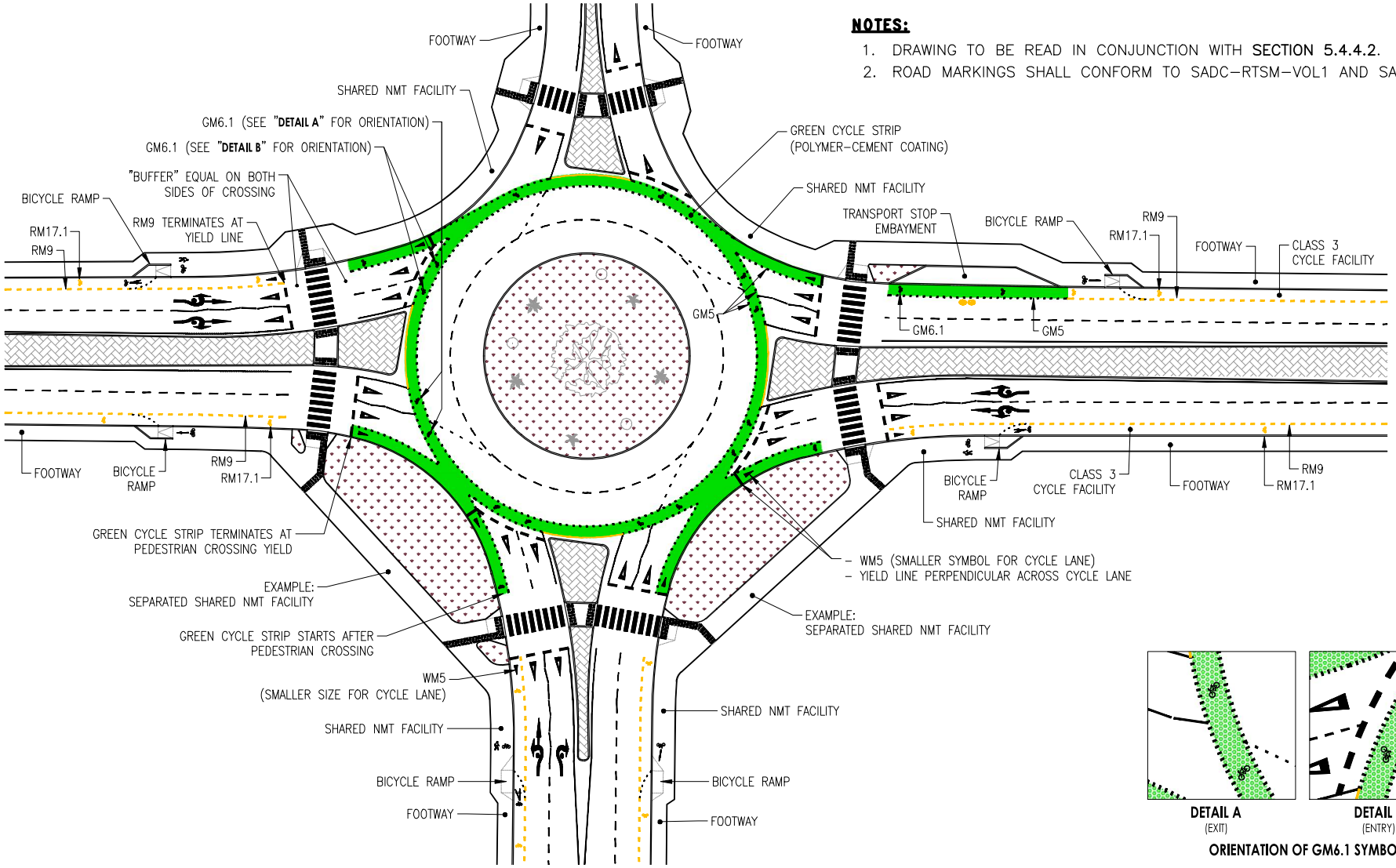

NOTES:

1. DRAWING TO BE READ IN CONJUNCTION WITH SECTION 5.4.4.2.
2. ROAD MARKINGS SHALL CONFORM TO SADC–RTSM–VOL1 AND SARTSM–VOL2.

CITY OF CAPE TOWN
ISIXEKO SASEKAPA
STAD KAAPSTAD

CITY OF CAPE TOWN
URBAN MOBILITY

TITLE

ACCOMMODATION OF CYCLISTS:
PROVISION OF GREEN CYCLE STRIPS THROUGH ROUNDABOUTS

STANDARDS AND GUIDELINES DETAILS

SCALE	PAPER
N.T.S.	A4
DRAWING No.	REV
RM1.2	B

P:\CAD\R&SD\ITI_01 Design\T_1000B Standards\T_1000RS DESIGN_Roads and Stormwater\0002 Drawings_Version4.0\02 RM\RM1.2 – Green Cycle Facilities – Roundabouts_RevB.dwg

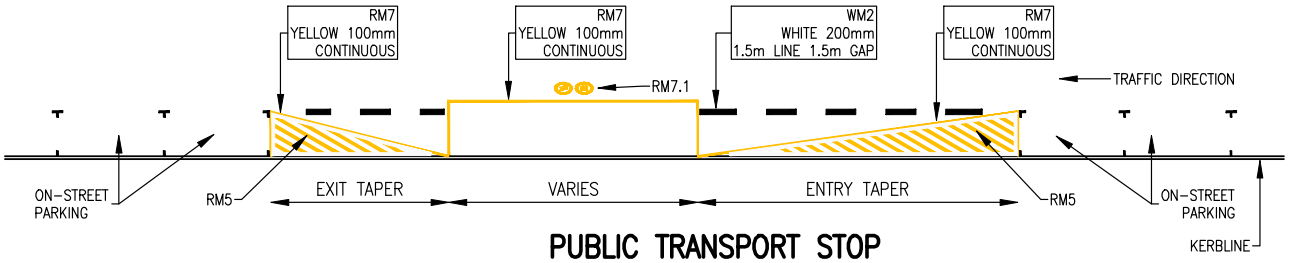

PUBLIC TRANSPORT STOP
(ADJACENT TO ON-STREET PARKING)

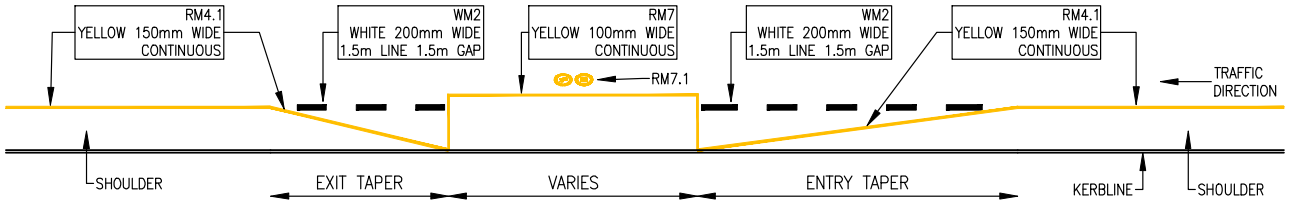

PUBLIC TRANSPORT STOP
(WITH SHOULDER)

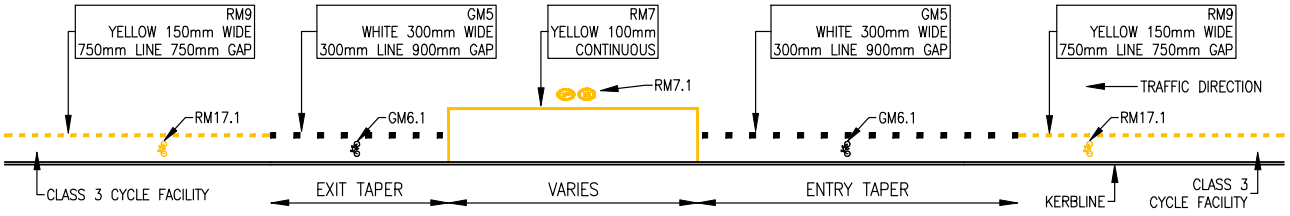

PUBLIC TRANSPORT STOP
(WITH CLASS 3 CYCLE FACILITY)

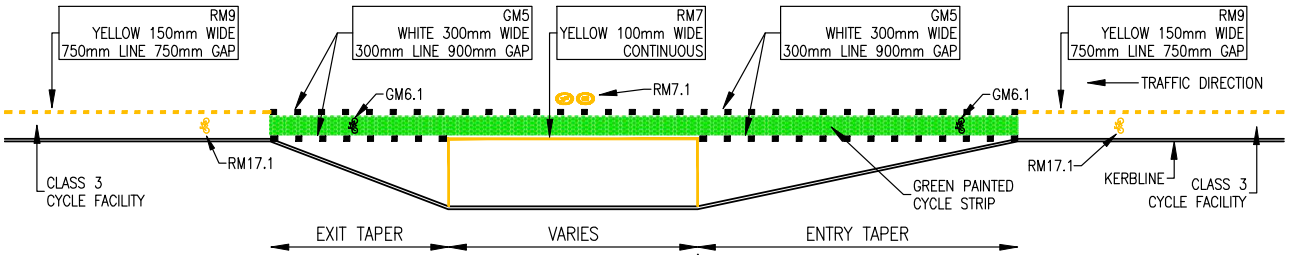

PUBLIC TRANSPORT EMBAYMENT
(WITH CLASS 3 CYCLE FACILITY)

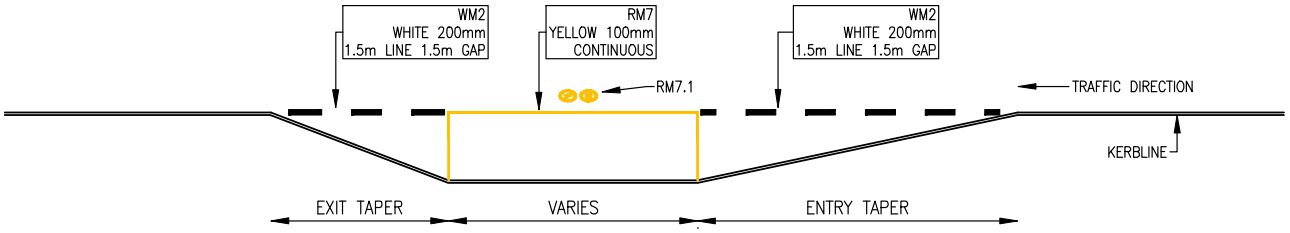

PUBLIC TRANSPORT EMBAYMENT

NOTES:

1. ASSUME EMBAYMENTS ARE SITUATED ON HIGH SIDE OF ROADWAY.
2. ROAD MARKINGS MUST CONFORM TO SADC–RTSM–VOL1 & SARTSM–VOL2.
3. REFER TO DRAWINGS RD8.2 & RD8.3 FOR EMBAYMENT DETAILS AND REQUIREMENTS.

SHEET INDEX:

SHEET 1: PUBLIC TRANSPORT: NORMAL STOPS & EMBAYMENTS
SHEET 2: PUBLIC TRANSPORT: HYBRID STOP–EMBAYMENTS

CITY OF CAPE TOWN
ISIXEKO SASEKAPA
STAD KAAPSTAD

CITY OF CAPE TOWN
URBAN MOBILITY

TITLE

TYPICAL ROAD MARKINGS FOR PUBLIC TRANSPORT STOPS AND EMBAYMENTS

NORMAL STOPS AND EMBAYMENTS

STANDARDS AND GUIDELINES DETAILS

SHEET 1

SCALE	PAPER
N.T.S.	A4
DRAWING No.	REV
RM2A	B

P:\CAD\R&SD\TL_01 Design\T_1000B Standards\T_1000RS DESIGN_Roads and Stormwater\0002 Drawings_Version4.0\02 RM\RM2A – PT Embayments and Stops_RevB.dwg

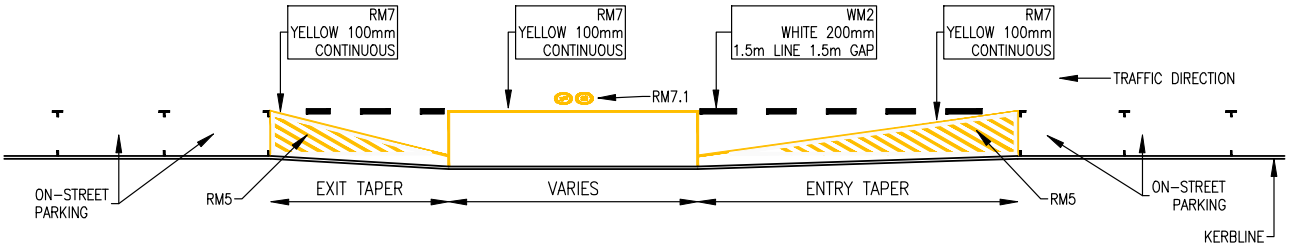

PUBLIC TRANSPORT STOP-EMBAYMENT (HYBRID)
(ADJACENT TO ON-STREET PARKING)

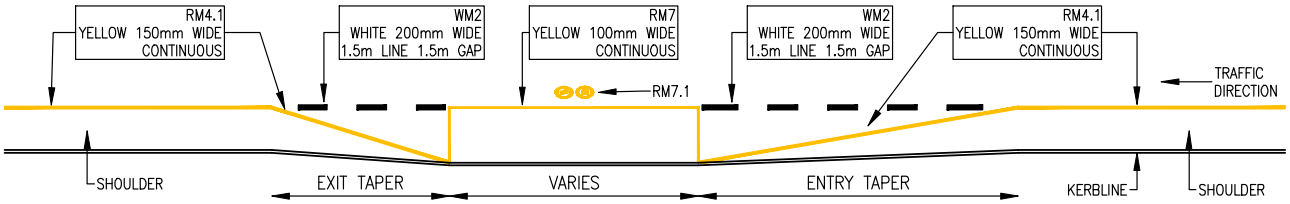

PUBLIC TRANSPORT STOP-EMBAYMENT (HYBRID)
(WITH SHOULDER)

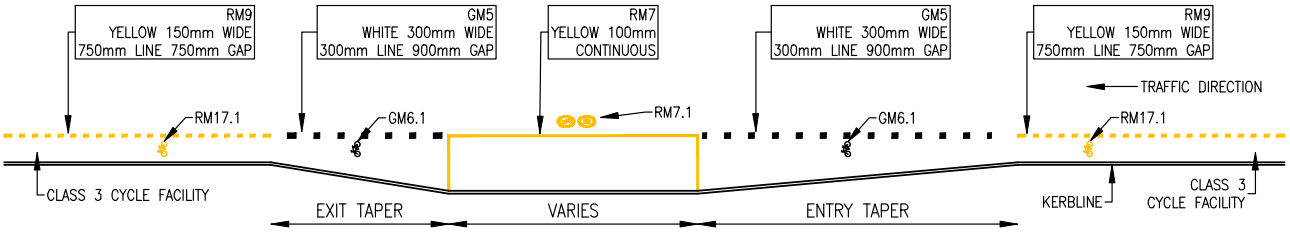

PUBLIC TRANSPORT STOP-EMBAYMENT (HYBRID)
(WITH CLASS 3 CYCLE FACILITY)

NOTES:

1. ASSUME EMBAYMENTS ARE SITUATED ON HIGH SIDE OF ROADWAY.
2. ROAD MARKINGS MUST CONFORM TO SADC-RTSM-VOL1 & SARTSM-VOL2.
3. REFER TO DRAWINGS RD8.2 & RD8.3 FOR EMBAYMENT DETAILS AND REQUIREMENTS.

SHEET INDEX:

SHEET 1: PUBLIC TRANSPORT: NORMAL STOPS & EMBAYMENTS
SHEET 2: PUBLIC TRANSPORT: HYBRID STOP-EMBAYMENTS

CITY OF CAPE TOWN
ISIXEKO SASEKAPA
STAD KAAPSTAD

CITY OF CAPE TOWN
URBAN MOBILITY

TITLE

TYPICAL ROAD MARKINGS FOR PUBLIC TRANSPORT STOPS AND EMBAYMENTS

HYBRID STOP-EMBAYMENTS

STANDARDS AND GUIDELINES DETAILS

SHEET 2

SCALE	PAPER
N.T.S.	A4
DRAWING No.	REV
RM2B	B

P:\CAD\R&SD\TL_01 Design\T_1000B Standards\T_1000RS DESIGN_Roads and Stormwater\0002 Drawings_Version4.0\02 RM\RM2B - PT Embayments and Stops_RevB.dwg

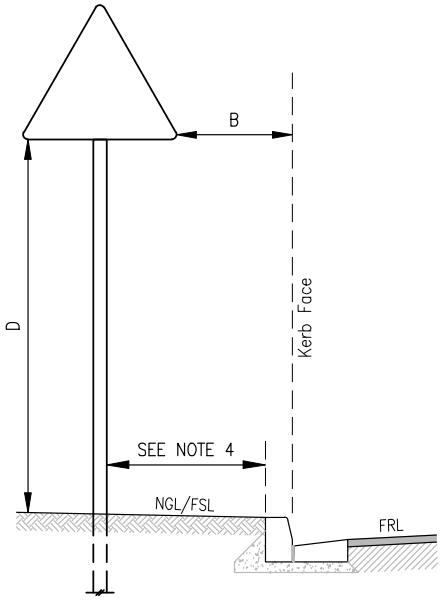

KERB: VERGE OR PEDESTRIAN FOOTWAY

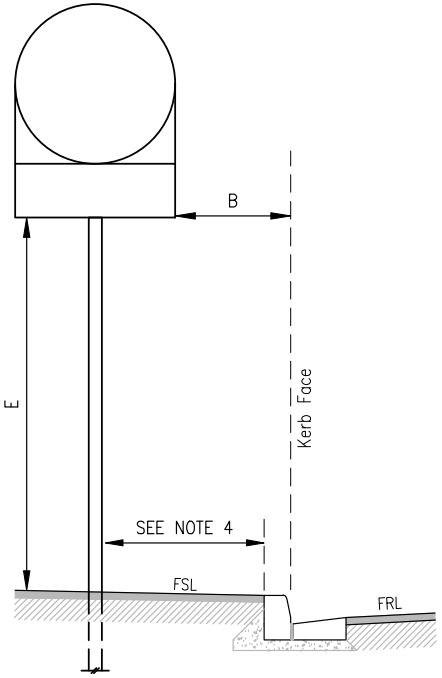

KERB: SHARED NMT FACILITY

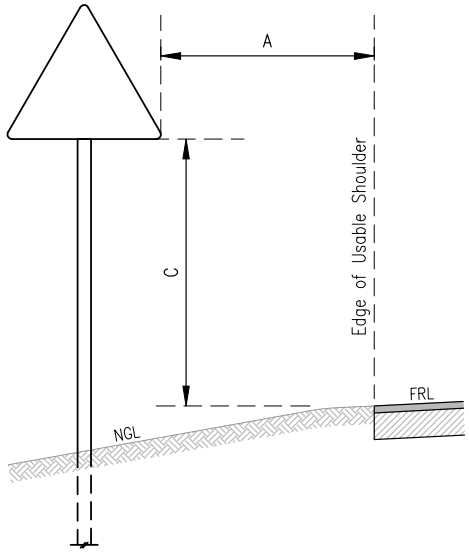

NO KERB (SHOULDER)

NOTES:

1. DRAWING TO BE READ IN CONJUNCTION WITH SECTION 9.2.
2. REFER TO DRAWING RM4 FOR ROAD SIGN INSTALLATION DETAILS.
3. SIGN PLACEMENT TO COMPLY WITH SARTSM–VOL2 CHAPTER 15.
4. WHERE SIGNS ARE SITUATED ON SURFACED FOOTWAYS, A MINIMUM LATERAL CLEARANCE OF 1.1m IS REQUIRED BETWEEN THE BACK OF ROADWAY KERB AND OUTER EDGE OF SIGN POLE, IN ORDER TO ACCOMMODATE WHEELCHAIR USERS.

TABLE 1
PERMANENT SIGN PLACEMENT DIMENSIONS

DESCRIPTION	POSITION REF.		DIMENSION (mm)		
	VERTICAL	LATERAL	MINIMUM	PREFERRED	MAXIMUM
KERB: UNMADE VERGE OR PEDESTRIAN FOOTWAY		B [1]	500	750	–
	D		2100	2500	3000
KERB: SHARED NMT FACILITY		B [1]	500	750	–
	E		2500	–	3000
NO KERB (SHOULDER)		A	1200	1500	2000
	C		600	2100	2500

[1] SEE NOTE 4

CITY OF CAPE TOWN
ISIXEKO SASEKAPA
STAD KAAPSTAD

CITY OF CAPE TOWN
URBAN MOBILITY

TITLE

LATERAL AND VERTICAL CLEARANCE REQUIREMENTS FOR SMALL SINGLE SUPPORT SIGNS

STANDARDS AND GUIDELINES DETAILS

SCALE	PAPER
N.T.S.	A4
DRAWING No.	REV
RM3	C

TABLE 1
POLE SIZE AND FOUNDATION REQUIREMENTS

SIGN TYPE	SMALL SIGNS			MEDIUM SIGNS		
	SIGN AREA	POLE SIZE	FOUNDATION (Fw)	SIGN AREA	POLE SIZE	FOUNDATION (Fw)
	m^2	mm	mm	m^2	mm	mm
A	0.16	60x3.5	500	0.35	60x3.5	600
B	0.28	60x3.5	600	0.62	76x3.5	700
C	0.28	60x3.5	500	0.64	60x3.5	500
D	0.44	76x3.5	700	0.99	89x3.5	800
E	0.48	63x3.5	600	0.61	76x3.5	700
A+A	0.31	63x3.5	600	0.70	76x3.5	800
C+C	0.57	60x3.5	500	1.28	63x3.5	600

BASED ON SUPPORT HEIGHT (h_s) OF 2.45m FOR A–E AND 3.0m FOR A+A & C+C

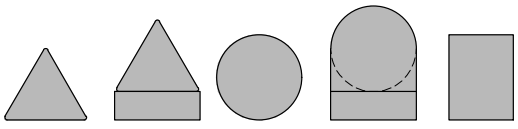

SIGN TYPE

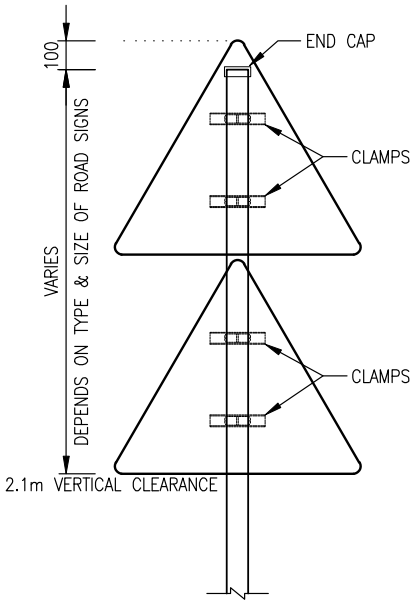

DOUBLE SIGNS
SCALE 1:25

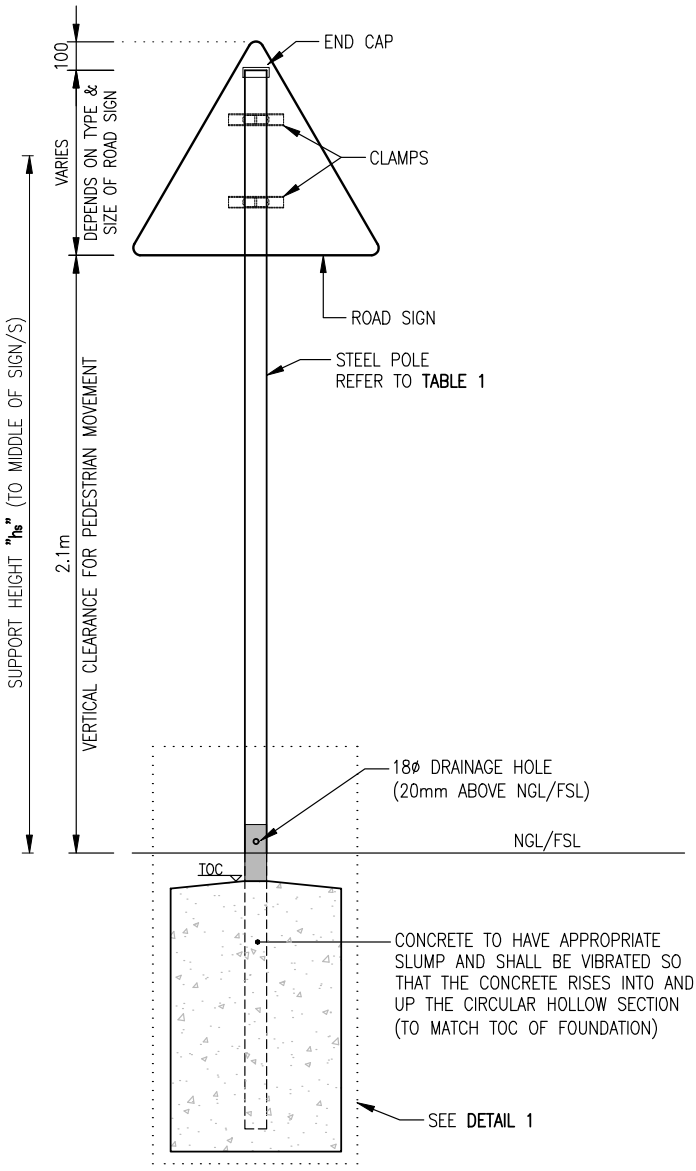

FRONT ELEVATION
SCALE 1:25

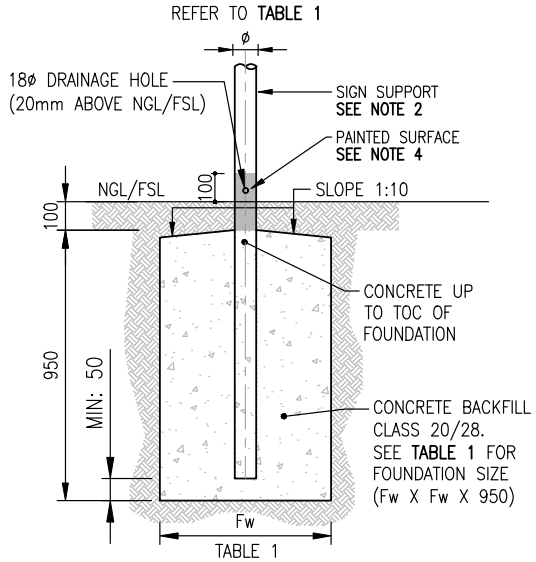

DETAIL 1
SCALE 1:25

NOTES:

1. DRAWING TO BE READ IN CONJUNCTION WITH SECTION 9.2 AND SARTSM–VOL2 CHAPTER 15.
2. TABLE 1 CAN BE USED AS A GUIDE TO DETERMINE THE POLE DIAMETER, THICKNESS AND FOUNDATION.
3. IN AREAS WITH A HIGH PROBABILITY OF THEFT, TIMBER POSTS SHOULD BE CONSIDERED.
4. MINIMUM REQUIREMENTS FOR SUPPORTS:
   - STEEL: CIRCULAR HOLLOW SECTION (GRADE S355 – EN 10025). HOT–DIP GALVANISED. DIAMETER AND THICKNESS AS PER **TABLE 1**.
   - TIMBER POST: 100mm ø (TOP). CLASS H4 "TANALITH" TREATER OR EQUIVALENT (SANS 10005).
4. PAINTING SHALL CONSIST OF ONE COAT EPOXY PRIMER, FOLLOWED BY ONE COAT POLYURETHANE TOP COAT (COLOUR: GREY). STEEL SURFACE SHALL BE CHEMICALLY CLEANED PRIOR TO PAINTING.
5. TWO BREAKAWAY HOLES SHALL BE PROVIDED FOR CHS SUPPORTS GREATER THAN 76mm AND TIMBER POSTS GREATER THAN 100mm, AS PER SARTSM–VOL2 CHAPTER 15.

NGL: NATURAL GROUND LEVEL
FSL: FINISHED SURFACE LEVEL
TOC: TOP OF CONCRETE

CITY OF CAPE TOWN
ISIXEKO SASEKAPA
STAD KAAPSTAD

CITY OF CAPE TOWN
URBAN MOBILITY

TITLE

ROAD SIGN SUPPORT STANDARD TYPE

STANDARDS AND GUIDELINES DETAILS

SCALE	PAPER
SHOWN	A4
DRAWING No.	REV
RM4.1	A

P:\CAD\R&SD\TL_01 Design\T_1000B Standards\T_1000RS DESIGN_Roads and Stormwater\0002 Drawings_Version4.0\02 RM\RM4.1 – Road Sign Support – Standard_RevA.dwg

TABLE 1
POLE SIZE AND FOUNDATION REQUIREMENTS

SIGN TYPE	SMALL SIGNS			MEDIUM SIGNS		
	SIGN AREA	POLE SIZE	FOUNDATION (Fw)	SIGN AREA	POLE SIZE	FOUNDATION (Fw)
	m^2	mm	mm	m^2	mm	mm
A	0.16	76x3.5	500	0.35	76x3.5	600
B	0.28	76x3.5	600	0.62	76x3.5	700
C	0.28	76x3.5	500	0.64	76x3.5	500
D	0.44	76x3.5	700	0.99	89x3.5	800
E	0.48	76x3.5	700	0.61	76x3.5	700

BASED ON SUPPORT HEIGHT (h_s) OF 2.55m

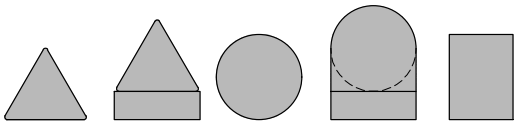

SIGN TYPE

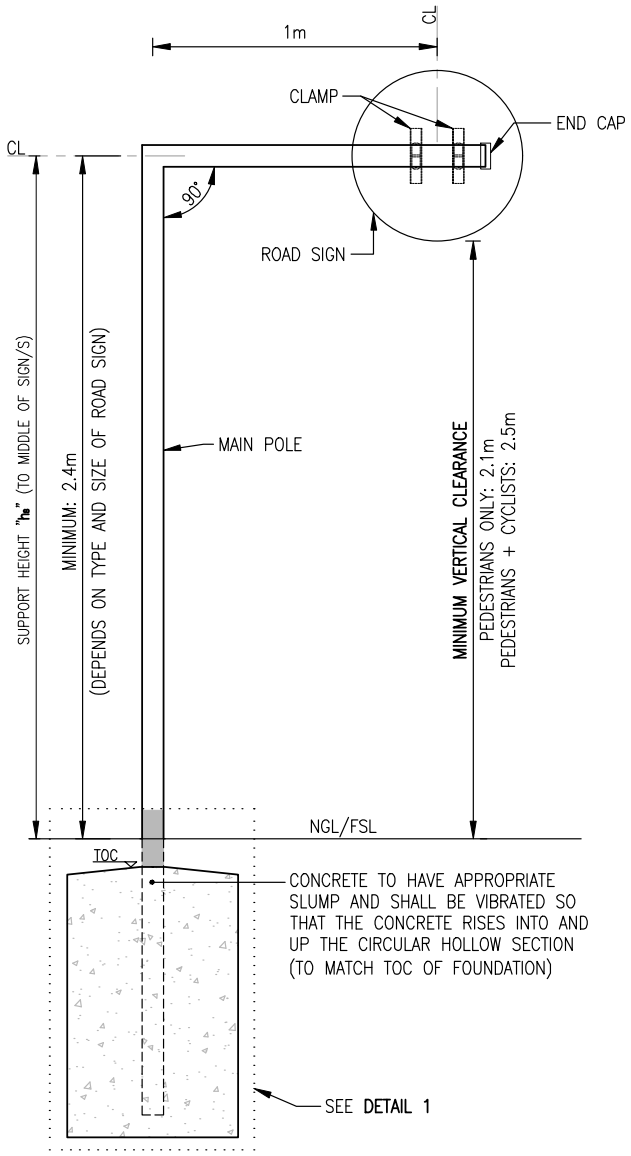

FRONT ELEVATION
SCALE 1:25

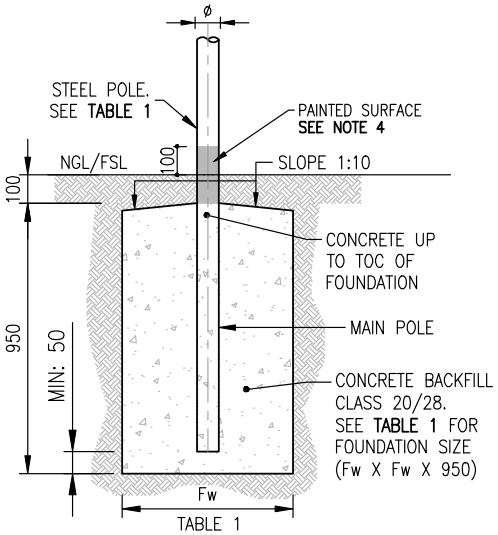

DETAIL 1
SCALE 1:25

NOTES:

1. DRAWING TO BE READ IN CONJUNCTION WITH SECTION 9.2 AND SARTSM–VOL2 CHAPTER 15.
2. TABLE 1 CAN BE USED AS A GUIDE TO DETERMINE THE POLE DIAMETER & THICKNESS, INCLUDING FOUNDATION SIZE.
3. MINIMUM REQUIREMENTS:
   - STRUCTURAL STEEL SHALL BE CIRCULAR HOLLOW SECTION (GRADE S355 – EN 10025) AND BOLTS HDG GRADE 8.8 (SANS 135).
   - ALL BURR AND SHARP EDGES TO BE REMOVED PRIOR TO WELDING. ALL WELDS TO BE 6mm FILLET WELDS. ALL WELD SCALE TO BE REMOVED PRIOR TO GALVANISING. ALL STEELWORK SHALL BE HOT–DIP GALVANISED TO SANS 121 (ISO 1461) (HEAVY DUTY) PASSIVATION.
4. PAINTING SHALL CONSIST OF ONE COAT EPOXY PRIMER, FOLLOWED BY ONE COAT POLYURETHANE TOP COAT (COLOUR: GREY). STEEL SURFACE SHALL BE CHEMICALLY CLEANED PRIOR TO PAINTING.
5. TWO BREAKAWAY HOLES SHALL BE PROVIDED FOR CHS SUPPORTS GREATER THAN 76mm AND TIMBER POSTS GREATER THAN 100mm, AS PER SARTSM–VOL2 CHAPTER 15.

NGL: NATURAL GROUND LEVEL
FSL: FINISHED SURFACE LEVEL
TOC: TOP OF CONCRETE

CITY OF CAPE TOWN
ISIXEKO SASEKAPA
STAD KAAPSTAD

CITY OF CAPE TOWN
URBAN MOBILITY

TITLE

CANTILEVER ROAD SIGN SUPPORT
SQUARE TYPE
SHORT ARM - SINGLE SIGN

STANDARDS AND GUIDELINES DETAILS

SHEET 1

SCALE	PAPER
SHOWN	A4
DRAWING No.	REV
RM4.2A	A

P:\CAD\R&SD\ITL_01 Design\T_1000B Standards\T_1000RS DESIGN_Roads and Stormwater\0002 Drawings_Version4.0\02 RM\RM4.2A – Road Sign Support – Cantilever_Square_ShortArm_Single_RevA.dwg

TABLE 1
POLE SIZE AND FOUNDATION REQUIREMENTS

SIGN TYPE	SMALL SIGNS			MEDIUM SIGNS		
	SIGN AREA	POLE SIZE	FOUNDATION (Fw)	SIGN AREA	POLE SIZE	FOUNDATION (Fw)
	m^2	mm	mm	m^2	mm	mm
A+A	0.31	76x3.5	600	0.70	89x3.5	800
C+C	0.57	76x3.5	500	1.28	76x3.5	500

BASED ON SUPPORT HEIGHT (h_s) OF 3.1m

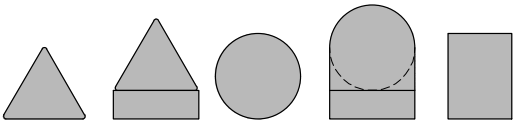

SIGN TYPE

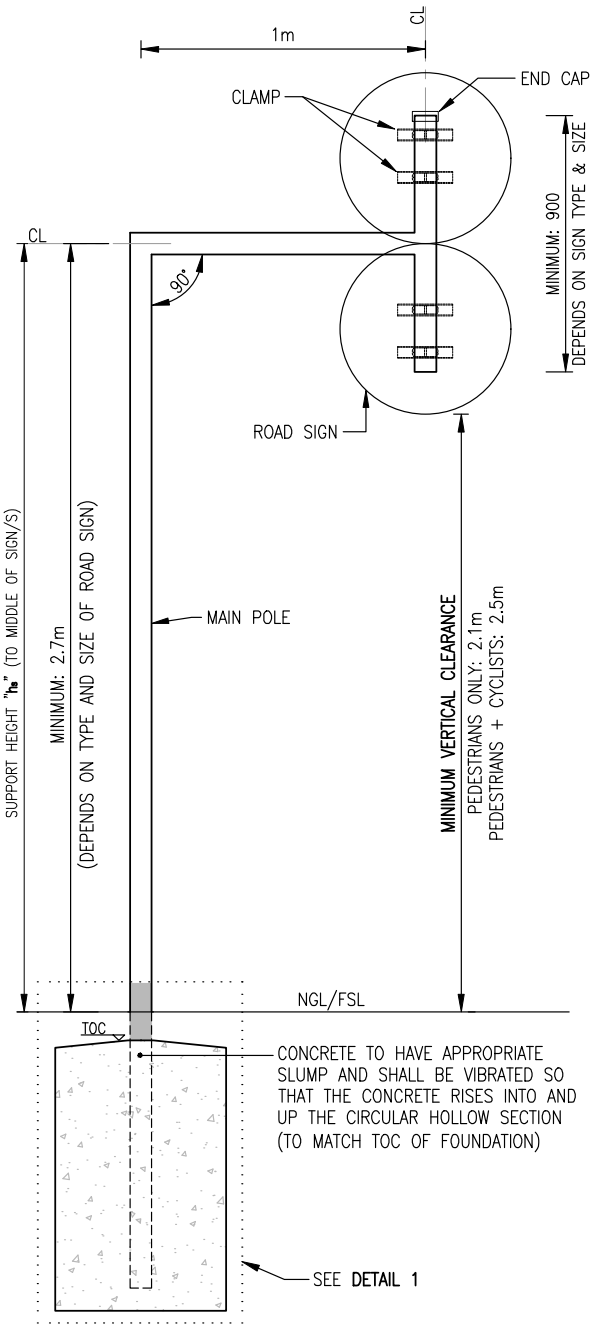

FRONT ELEVATION
SCALE 1:25

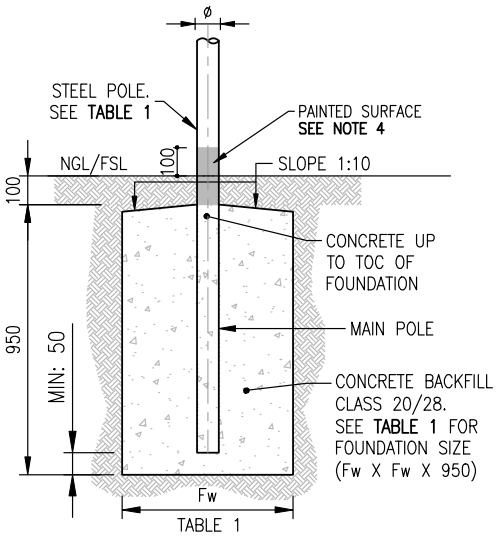

DETAIL 1
SCALE 1:25

NOTES:

1. DRAWING TO BE READ IN CONJUNCTION WITH SECTION 9.2 AND SARTSM–VOL2 CHAPTER 15.
2. TABLE 1 CAN BE USED AS A GUIDE TO DETERMINE THE POLE DIAMETER & THICKNESS, INCLUDING FOUNDATION SIZE.
3. MINIMUM REQUIREMENTS:
   - STRUCTURAL STEEL SHALL BE CIRCULAR HOLLOW SECTION (GRADE S355 – EN 10025) AND BOLTS HDG GRADE 8.8 (SANS 135).
   - ALL BURR AND SHARP EDGES TO BE REMOVED PRIOR TO WELDING. ALL WELDS TO BE 6mm FILLET WELDS. ALL WELD SCALE TO BE REMOVED PRIOR TO GALVANISING. ALL STEELWORK SHALL BE HOT–DIP GALVANISED TO SANS 121 (ISO 1461) (HEAVY DUTY) PASSIVATION.
4. PAINTING SHALL CONSIST OF ONE COAT EPOXY PRIMER, FOLLOWED BY ONE COAT POLYURETHANE TOP COAT (COLOUR: GREY). STEEL SURFACE SHALL BE CHEMICALLY CLEANED PRIOR TO PAINTING.
5. TWO BREAKAWAY HOLES SHALL BE PROVIDED FOR CHS SUPPORTS GREATER THAN 76mm AND TIMBER POSTS GREATER THAN 100mm, AS PER SARTSM–VOL2 CHAPTER 15.

NGL: NATURAL GROUND LEVEL
FSL: FINISHED SURFACE LEVEL
TOC: TOP OF CONCRETE

CITY OF CAPE TOWN
ISIXEKO SASEKAPA
STAD KAAPSTAD

CITY OF CAPE TOWN
URBAN MOBILITY

TITLE

CANTILEVER ROAD SIGN SUPPORT
SQUARE TYPE
SHORT ARM - MULTIPLE SIGNS

STANDARDS AND GUIDELINES DETAILS

SHEET 2

SCALE	PAPER
SHOWN	A4
DRAWING No.	REV
RM4.2B	A

P:\CAD\R&SD\TL_01 Design\T_1000B Standards\T_1000RS DESIGN_Roads and Stormwater\0002 Drawings_Version4.0\02 RM\RM4.2B – Road Sign Support – Cantilever_Square_ShortArm_Multiple_RevA.dwg

TABLE 1: POST SIZE REQUIREMENTS								
SIGN TYPE	SMALL SIGNS				MEDIUM SIGNS			
	SIGN AREA	POLE SIZE BASE	POLE SIZE MAIN	FOUNDATION	SIGN AREA	POLE SIZE BASE	POLE SIZE MAIN	FOUNDATION
	m^2	mm	mm	mm	m^2	mm	mm	mm
A	0.16	89x6	76x3.5	500	0.35	89x6	76x3.5	600
B	0.28	89x6	76x3.5	600	0.62	102x6	89x3.5	800
C	0.28	89x6	76x3.5	500	0.64	89x6	76x3.5	500
D	0.44	102x6	89x3.5	800	0.99	114x6	102x3.5	900
E	0.48	102x6	89x3.5	800	0.61	102x6	89x3.5	800

BASED ON SUPPORT HEIGHT (h_s) OF 3m

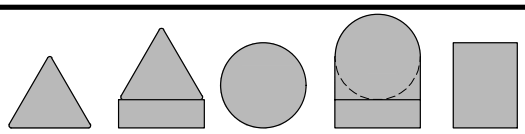

SIGN TYPE

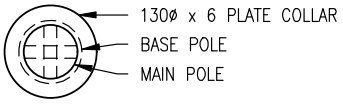

SECTION A–A
SCALE 1:10

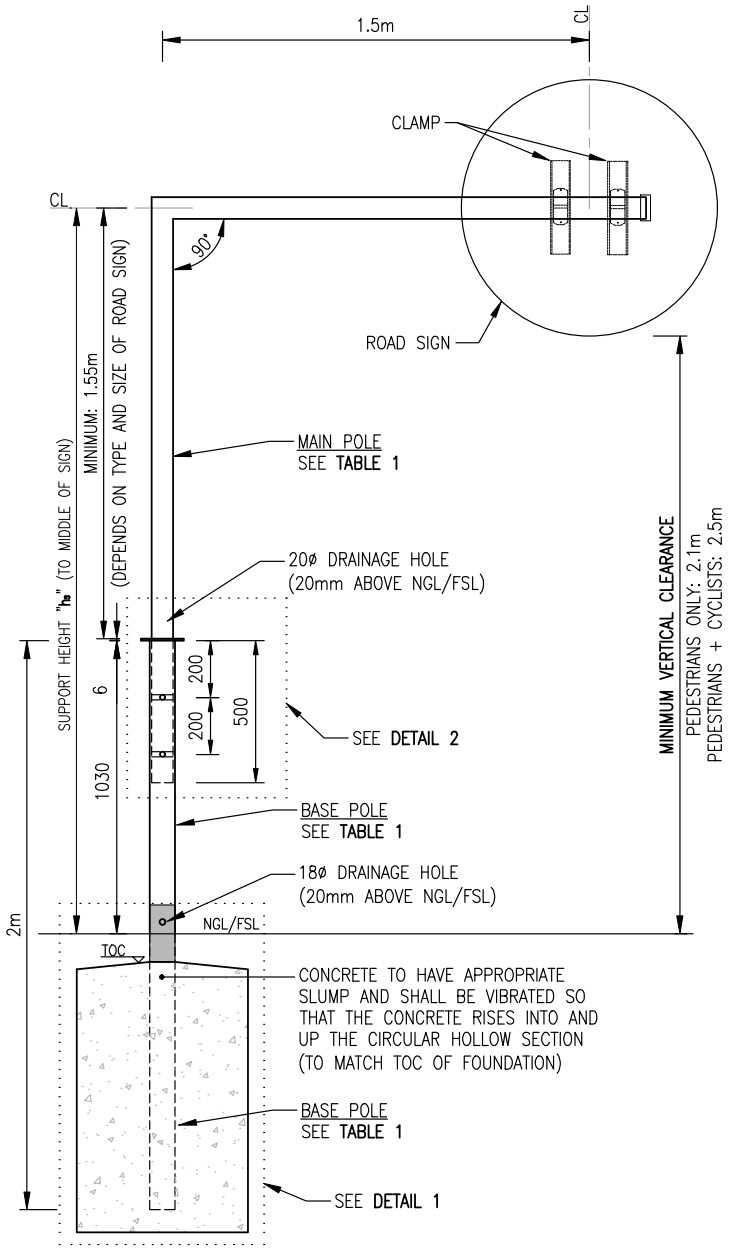

FRONT ELEVATION
SCALE 1:25

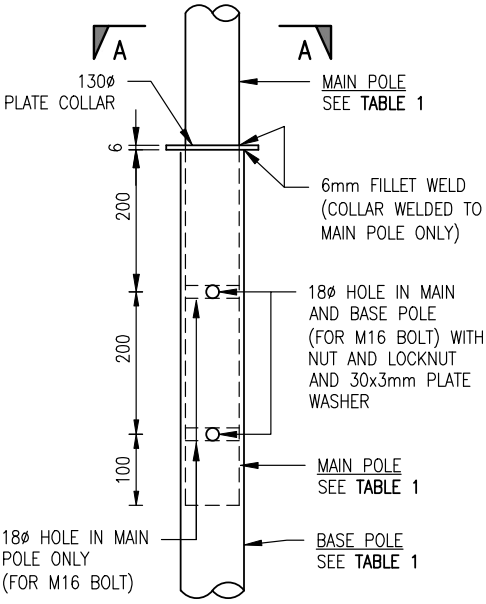

DETAIL 2
SCALE 1:10

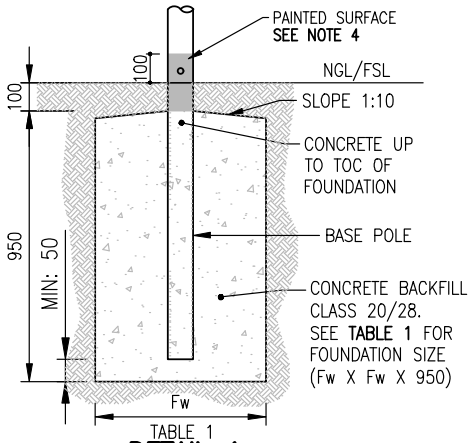

TABLE 1

DETAIL 1
SCALE 1:25

NOTES:

1. DRAWING TO BE READ IN CONJUNCTION WITH SECTION 9.2 AND SARTSM–VOL2 CHAPTER 15.
2. TABLE 1 CAN BE USED AS A GUIDE TO DETERMINE THE POLE DIAMETER & THICKNESS, INCLUDING FOUNDATION SIZE.
3. MINIMUM REQUIREMENTS:
   - STRUCTURAL STEEL SHALL BE CIRCULAR HOLLOW SECTION (GRADE S355 – EN 10025).
   - BOLTS: M16, HDG GRADE 8.8 (SANS 135), UNLESS SPECIFIED OTHERWISE.
   - ALL BURR AND SHARP EDGES TO BE REMOVED PRIOR TO WELDING. ALL WELDS TO BE 6mm FILLET WELDS. ALL WELD SCALE TO BE REMOVED PRIOR TO GALVANISING. ALL STEELWORK SHALL BE HOT–DIP GALVANISED TO SANS 121 (ISO 1461) (HEAVY DUTY) PASSIVATION.
4. PAINTING SHALL CONSIST OF ONE COAT EPOXY PRIMER, FOLLOWED BY ONE COAT POLYURETHANE TOP COAT (COLOUR: GREY). STEEL SURFACE SHALL BE CHEMICALLY CLEANED PRIOR TO PAINTING.
5. TWO BREAKAWAY HOLES SHALL BE PROVIDED FOR CHS SUPPORTS GREATER THAN 76mm AND TIMBER POSTS GREATER THAN 100mm, AS PER SARTSM–VOL2 CHAPTER 15.
6. SHOULD THE USE OF A CONTINUOUS SUPPORT BE PREFERRED (AS OPPOSED TO A BASE + MAIN POLE), THE MAIN POLE DIAMETER SHOULD BE USED.

NGL: NATURAL GROUND LEVEL
FSL: FINISHED SURFACE LEVEL
TOC: TOP OF CONCRETE

CITY OF CAPE TOWN
ISIXEKO SASEKAPA
STAD KAAPSTAD

CITY OF CAPE TOWN
URBAN MOBILITY

TITLE

CANTILEVER ROAD SIGN SUPPORT
SQUARE TYPE
LONG ARM - SINGLE SIGN

STANDARDS AND GUIDELINES DETAILS

SHEET 1

SCALE	PAPER
SHOWN	A4
DRAWING No.	REV
RM4.3A	A

P:\CAD\R&SD\ITL_01 Design\T_1000B Standards\T_1000RS DESIGN_Roads and Stormwater\0002 Drawings_Version4.0\02 RM\RM4.3A – Road Sign Support – Cantilever_Square_LongArm_Single_RevA.dwg

TABLE 1: POST SIZE REQUIREMENTS								
SIGN TYPE	SMALL SIGNS				MEDIUM SIGNS			
	SIGN AREA	POLE SIZE BASE	POLE SIZE MAIN	FOUNDATION	SIGN AREA	POLE SIZE BASE	POLE SIZE MAIN	FOUNDATION
	m^2	mm	mm	mm	m^2	mm	mm	mm
A+A	0.31	102x6	89x3.5	600	0.7	114x6	102x3.5	800
C+C	0.57	102x6	89x3.5	800	1.28	114x6	102x3.5	1000

BASED ON SUPPORT HEIGHT (h_s) OF 3.45m

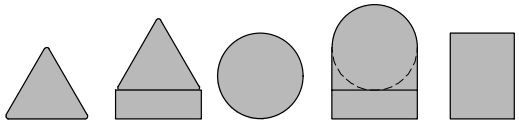

SIGN TYPE

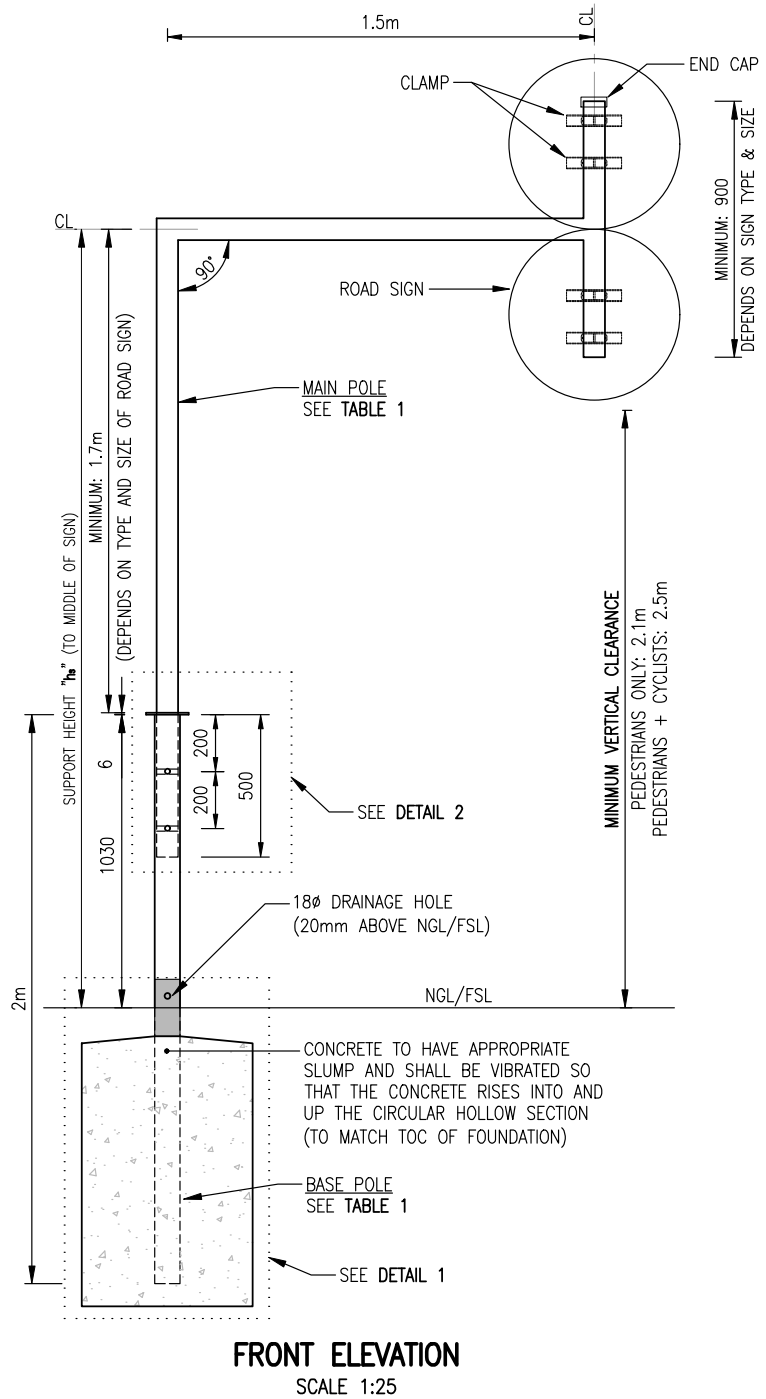

FRONT ELEVATION
SCALE 1:25

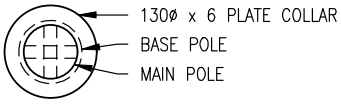

SECTION A–A
SCALE 1:10

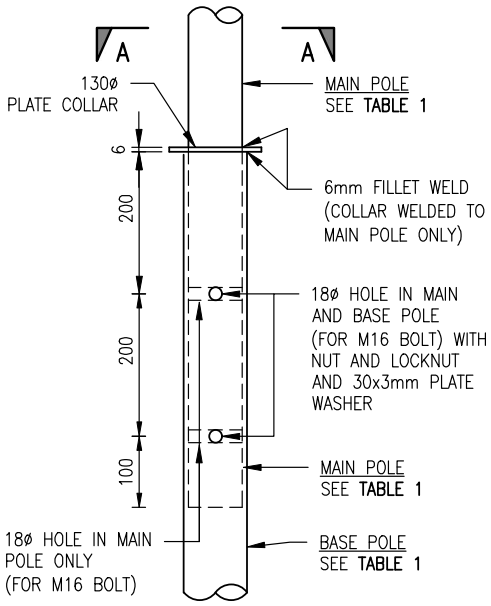

DETAIL 2
SCALE 1:10

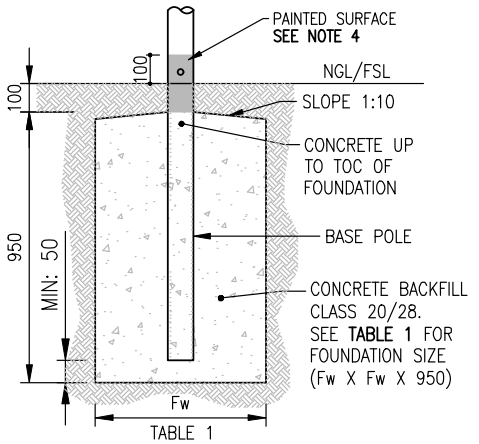

DETAIL 1
SCALE 1:25

NOTES:

1. DRAWING TO BE READ IN CONJUNCTION WITH SECTION 9.2 AND SARTSM–VOL2 CHAPTER 15.
2. TABLE 1 CAN BE USED AS A GUIDE TO DETERMINE THE POLE DIAMETER & THICKNESS, INCLUDING FOUNDATION SIZE.
3. MINIMUM REQUIREMENTS:
   - STRUCTURAL STEEL SHALL BE CIRCULAR HOLLOW SECTION (GRADE S355 – EN 10025).
   - BOLTS: M16, HDG GRADE 8.8 (SANS 135), UNLESS SPECIFIED OTHERWISE.
   - ALL BURR AND SHARP EDGES TO BE REMOVED PRIOR TO WELDING. ALL WELDS TO BE 6mm FILLET WELDS. ALL WELD SCALE TO BE REMOVED PRIOR TO GALVANISING. ALL STEELWORK SHALL BE HOT–DIP GALVANISED TO SANS 121 (ISO 1461) (HEAVY DUTY) PASSIVATION.
4. PAINTING SHALL CONSIST OF ONE COAT EPOXY PRIMER, FOLLOWED BY ONE COAT POLYURETHANE TOP COAT (COLOUR: GREY). STEEL SURFACE SHALL BE CHEMICALLY CLEANED PRIOR TO PAINTING.
5. TWO BREAKAWAY HOLES SHALL BE PROVIDED FOR CHS SUPPORTS GREATER THAN 76mm AND TIMBER POSTS GREATER THAN 100mm, AS PER SARTSM–VOL2 CHAPTER 15.
6. SHOULD THE USE OF A CONTINUOUS SUPPORT BE PREFERRED (AS OPPOSED TO A BASE + MAIN POLE), THE MAIN POLE DIAMETER SHOULD BE USED.

NGL: NATURAL GROUND LEVEL
FSL: FINISHED SURFACE LEVEL
TOC: TOP OF CONCRETE

CITY OF CAPE TOWN
ISIXEKO SASEKAPA
STAD KAAPSTAD

CITY OF CAPE TOWN
URBAN MOBILITY

TITLE

CANTILEVER ROAD SIGN SUPPORT
SQUARE TYPE
LONG ARM - MULTIPLE SIGNS

STANDARDS AND GUIDELINES DETAILS

SHEET 2

SCALE	PAPER
SHOWN	A4
DRAWING No.	REV
RM4.3B	A

P:\CAD\R&SD\ITL_01 Design\T_1000B Standards\T_1000RS DESIGN_Roads and Stormwater\0002 Drawings_Version4.0\02 RM\RM4.3B – Road Sign Support – Cantilever_Square_LongArm_Multiple_RevA.dwg

TABLE 1: POST SIZE REQUIREMENTS

SIGN TYPE	SMALL SIGNS				MEDIUM SIGNS			
	SIGN AREA	POLE SIZE BASE	POLE SIZE MAIN	FOUNDATION	SIGN AREA	POLE SIZE BASE	POLE SIZE MAIN	FOUNDATION
	m^2	mm	mm	mm	m^2	mm	mm	mm
A	0.16	89x6	76x3.5	500	0.35	89x6	76x3.5	700
B	0.28	89x6	76x3.5	600	0.62	102x6	89x3.5	800
C	0.28	89x6	76x3.5	500	0.64	89x6	76x3.5	700
D	0.44	102x6	89x3.5	800	0.99	114x6	102x3.5	900
E	0.48	89x6	76x3.5	600	0.61	102x6	89x3.5	800

BASED ON SUPPORT HEIGHT (h_s) OF 2.95m

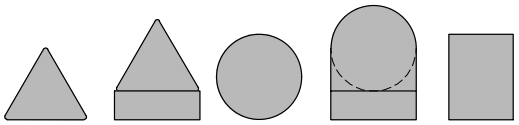

SIGN TYPE

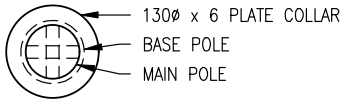

SECTION A–A
SCALE 1:10

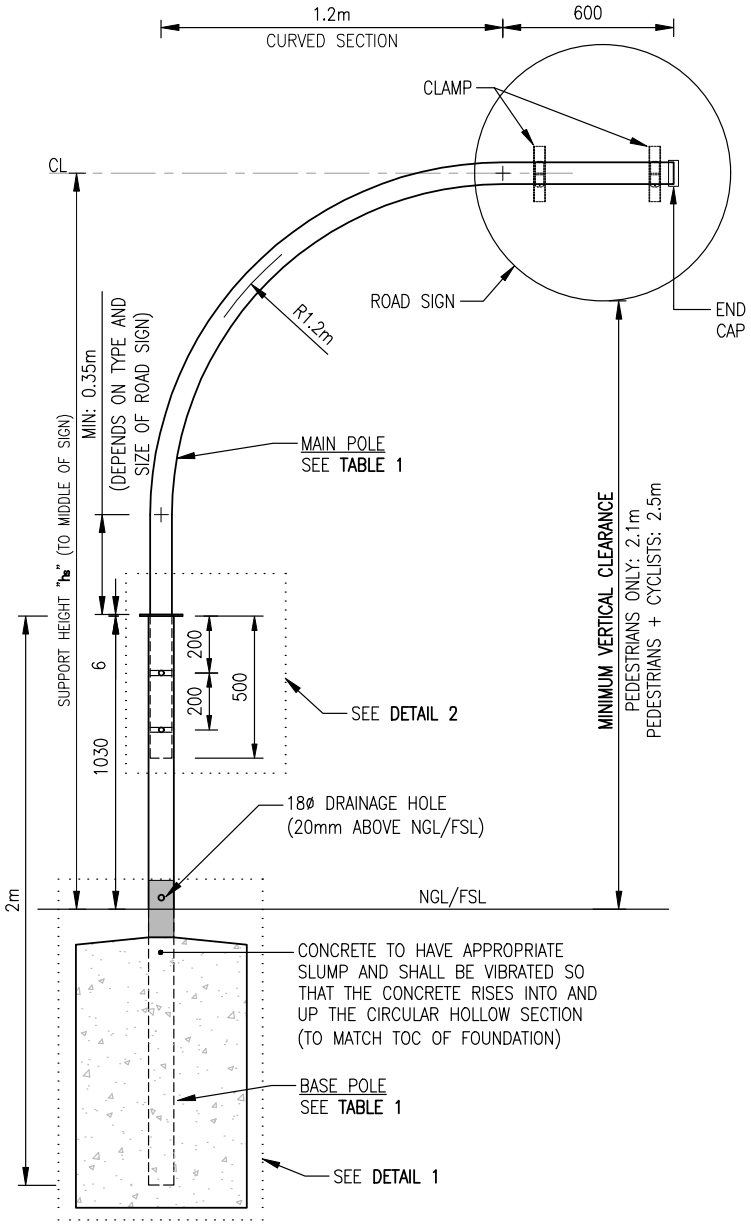

FRONT ELEVATION
SCALE 1:25

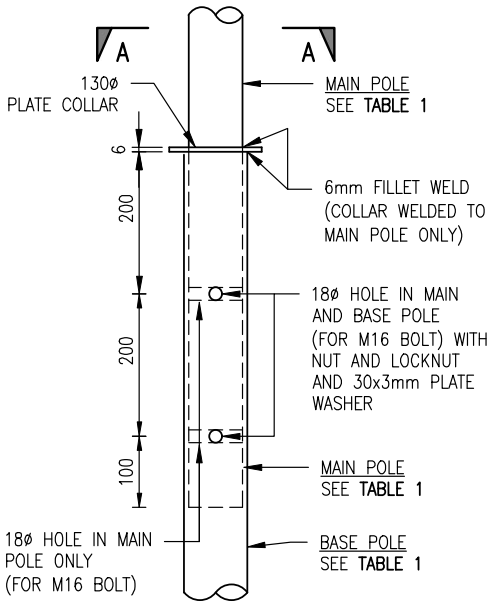

DETAIL 2
SCALE 1:10

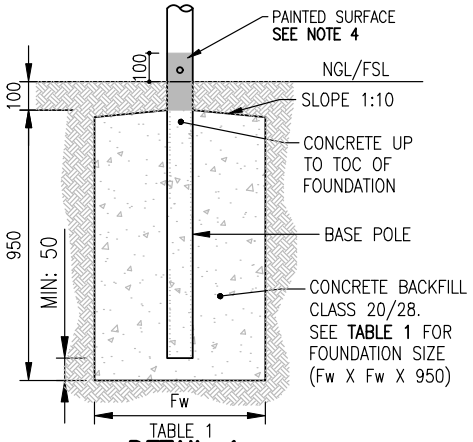

DETAIL 1
SCALE 1:25

NOTES:

1. DRAWING TO BE READ IN CONJUNCTION WITH SECTION 9.2 AND SARTSM–VOL2 CHAPTER 15.
2. TABLE 1 CAN BE USED AS A GUIDE TO DETERMINE THE POLE DIAMETER & THICKNESS, INCLUDING FOUNDATION SIZE.
3. MINIMUM REQUIREMENTS:
   - STRUCTURAL STEEL SHALL BE CIRCULAR HOLLOW SECTION (GRADE S355 – EN 10025).
   - BOLTS: M16, HDG GRADE 8.8 (SANS 135), UNLESS SPECIFIED OTHERWISE.
   - ALL BURR AND SHARP EDGES TO BE REMOVED PRIOR TO WELDING. ALL WELDS TO BE 6mm FILLET WELDS. ALL WELD SCALE TO BE REMOVED PRIOR TO GALVANISING. ALL STEELWORK SHALL BE HOT–DIP GALVANISED TO SANS 121 (ISO 1461) (HEAVY DUTY) PASSIVATION.
4. PAINTING SHALL CONSIST OF ONE COAT EPOXY PRIMER, FOLLOWED BY ONE COAT POLYURETHANE TOP COAT (COLOUR: GREY). STEEL SURFACE SHALL BE CHEMICALLY CLEANED PRIOR TO PAINTING.
5. TWO BREAKAWAY HOLES SHALL BE PROVIDED FOR CHS SUPPORTS GREATER THAN 76mm AND TIMBER POSTS GREATER THAN 100mm, AS PER SARTSM–VOL2 CHAPTER 15.
6. SHOULD THE USE OF A CONTINUOUS SUPPORT BE PREFERRED (AS OPPOSED TO A BASE + MAIN POLE), THE MAIN POLE DIAMETER SHOULD BE USED.

NGL: NATURAL GROUND LEVEL
FSL: FINISHED SURFACE LEVEL
TOC: TOP OF CONCRETE

CITY OF CAPE TOWN
ISIXEKO SASEKAPA
STAD KAAPSTAD

CITY OF CAPE TOWN
URBAN MOBILITY

TITLE

CANTILEVER ROAD SIGN SUPPORT
CURVED TYPE
SINGLE SIGN

STANDARDS AND GUIDELINES DETAILS

SHEET 1

SCALE	PAPER
SHOWN	A4
DRAWING No.	REV
RM4.4A	A

P:\CAD\R&SD\TL_01 Design\T_1000B Standards\T_1000RS DESIGN_Roads and Stormwater\0002 Drawings_Version4.0\02 RM\RM4.4A – Road Sign Support – Cantilever_Curved_Single_RevA.dwg

TABLE 1: POST SIZE REQUIREMENTS								
SIGN TYPE	SMALL SIGNS				MEDIUM SIGNS			
	SIGN AREA	POLE SIZE BASE	POLE SIZE MAIN	FOUNDATION	SIGN AREA	POLE SIZE BASE	POLE SIZE MAIN	FOUNDATION
	m^2	mm	mm	mm	m^2	mm	mm	mm
A+A	0.16	89x6	76x3.5	600	0.7	114x6	102x3.5	800
C+C	0.28	89x6	76x3.5	500	1.28	102x6	89x3.5	700

BASED ON SUPPORT HEIGHT (h_s) OF 3.45m

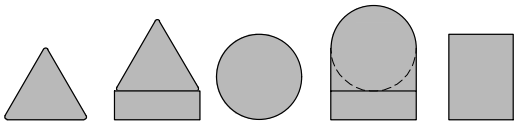

SIGN TYPE

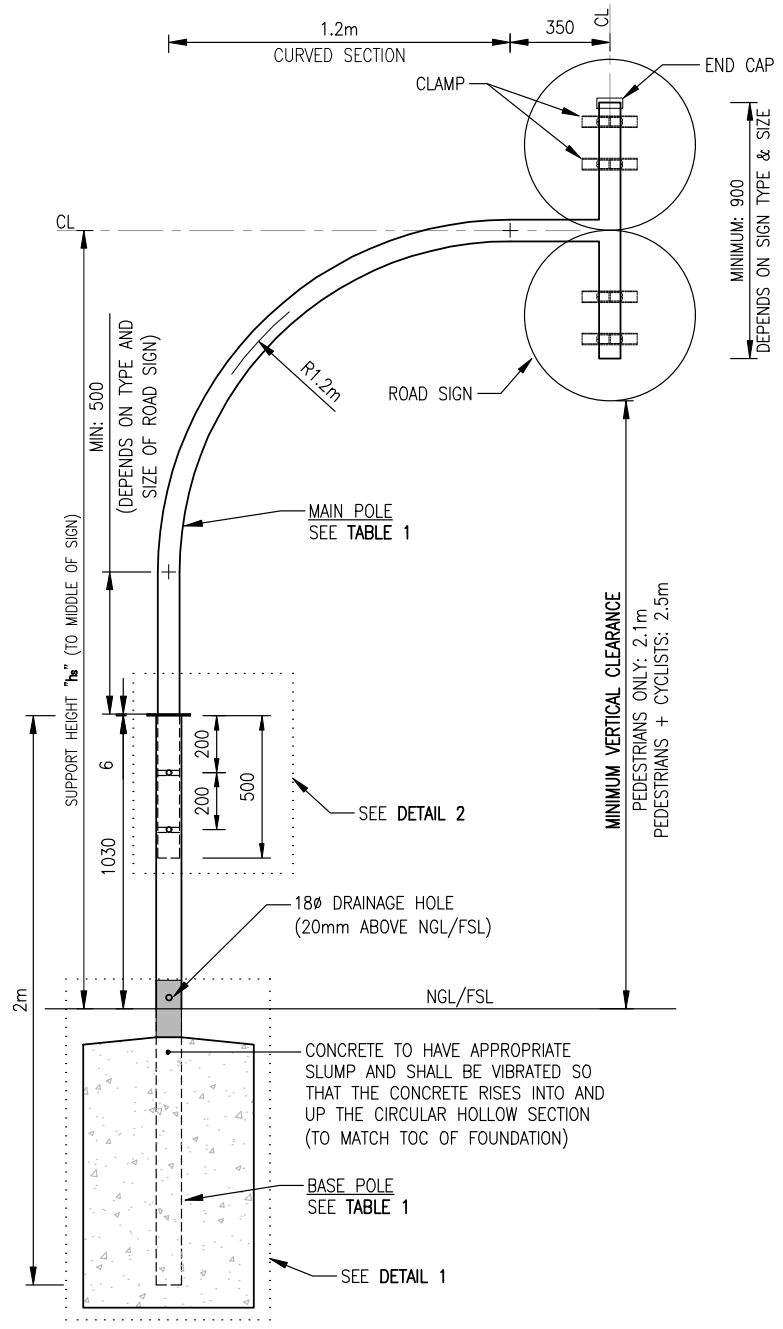

FRONT ELEVATION
SCALE 1:25

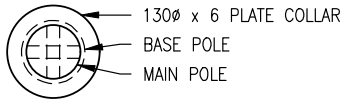

SECTION A–A
SCALE 1:10

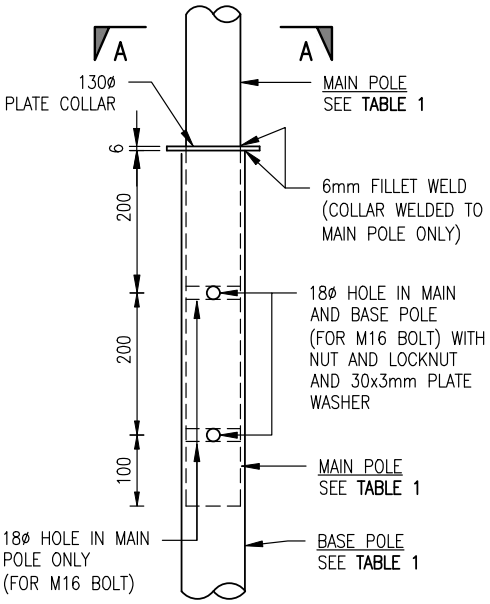

DETAIL 2
SCALE 1:10

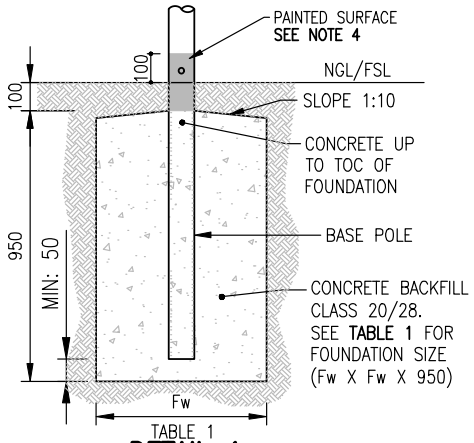

DETAIL 1
SCALE 1:25

NOTES:

1. DRAWING TO BE READ IN CONJUNCTION WITH SECTION 9.2 AND SARTSM–VOL2 CHAPTER 15.
2. TABLE 1 CAN BE USED AS A GUIDE TO DETERMINE THE POLE DIAMETER & THICKNESS, INCLUDING FOUNDATION SIZE.
3. MINIMUM REQUIREMENTS:
   - STRUCTURAL STEEL SHALL BE CIRCULAR HOLLOW SECTION (GRADE S355 – EN 10025).
   - BOLTS: M16, HDG GRADE 8.8 (SANS 135), UNLESS SPECIFIED OTHERWISE.
   - ALL BURR AND SHARP EDGES TO BE REMOVED PRIOR TO WELDING. ALL WELDS TO BE 6mm FILLET WELDS. ALL WELD SCALE TO BE REMOVED PRIOR TO GALVANISING. ALL STEELWORK SHALL BE HOT–DIP GALVANISED TO SANS 121 (ISO 1461) (HEAVY DUTY) PASSIVATION.
4. PAINTING SHALL CONSIST OF ONE COAT EPOXY PRIMER, FOLLOWED BY ONE COAT POLYURETHANE TOP COAT (COLOUR: GREY). STEEL SURFACE SHALL BE CHEMICALLY CLEANED PRIOR TO PAINTING.
5. TWO BREAKAWAY HOLES SHALL BE PROVIDED FOR CHS SUPPORTS GREATER THAN 76mm AND TIMBER POSTS GREATER THAN 100mm, AS PER SARTSM–VOL2 CHAPTER 15.
6. SHOULD THE USE OF A CONTINUOUS SUPPORT BE PREFERRED (AS OPPOSED TO A BASE + MAIN POLE), THE MAIN POLE DIAMETER SHOULD BE USED.

NGL: NATURAL GROUND LEVEL
FSL: FINISHED SURFACE LEVEL
TOC: TOP OF CONCRETE

CITY OF CAPE TOWN
ISIXEKO SASEKAPA
STAD KAAPSTAD

CITY OF CAPE TOWN
URBAN MOBILITY

TITLE

CANTILEVER ROAD SIGN SUPPORT
CURVED TYPE
MULTIPLE SIGNS

STANDARDS AND GUIDELINES DETAILS

SHEET 2

SCALE	PAPER
SHOWN	A4
DRAWING No.	REV
RM4.4B	A

P:\CAD\R&SD\ITL_01 Design\T_1000B Standards\T_1000RS DESIGN_Roads and Stormwater\0002 Drawings_Version4.0\02 RM\RM4.4B – Road Sign Support – Cantilever_Curved_Multiple_RevA.dwg

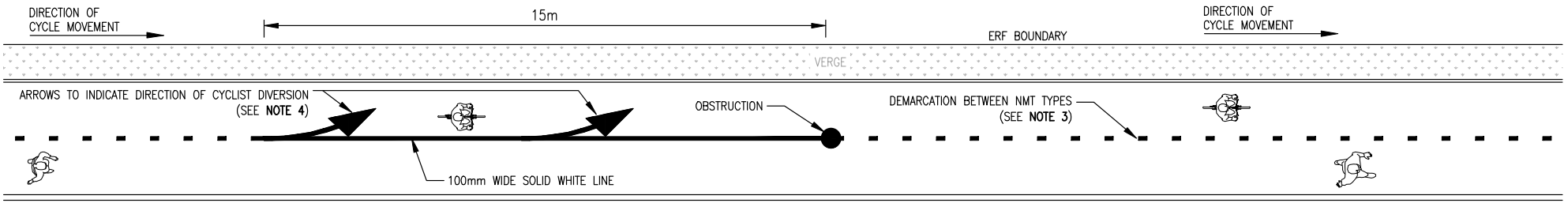

ONE–DIRECTIONAL CYCLE MOVEMENT

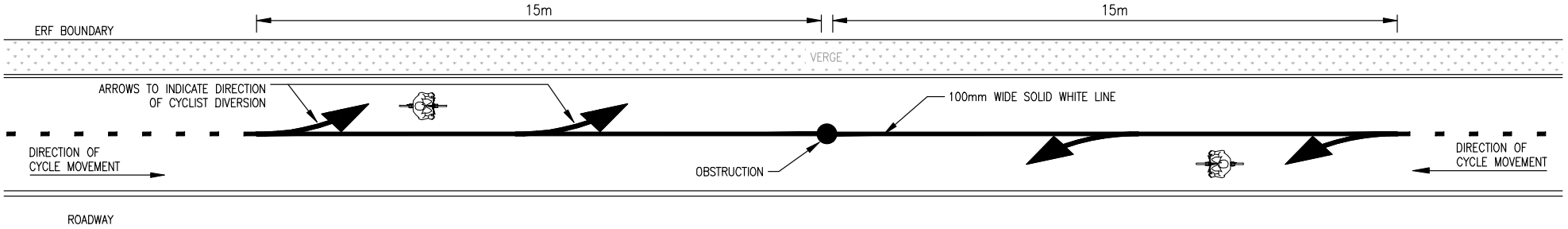

BI–DIRECTIONAL CYCLE MOVEMENT

NOTES:

1. OBSTRUCTIONS MAY INCLUDE STREET LIGHT POLES, ROAD SIGNS, BOLLARDS OR OTHER DEVICES INTENTIONALLY PLACED IN THE NMT FACILITY WITH A VIEW TO PREVENT VEHICULAR TRAFFIC.
2. WHERE THE OBSTRUCTION IS A BOLLARD, IT SHALL BE PAINTED AS PER DRAWING GE1.
3. THE SAME DIVERSION PRINCIPLES SHALL BE APPLIED WHERE THERE IS NO MARKED DEMARCATION BETWEEN THE NMT TYPES ON A SHARED FACILITY.
4. WHERE UPSTREAM MARKINGS HAVE BEEN PROVIDED, THE DIVERSION ARROWS SHALL BE APPLIED ACCORDINGLY (i.e. IF UPSTREAM MARKING CONSISTENTLY INDICATES THAT CYCLISTS SHOULD KEEP RIGHT, THE ARROWS SHALL DIVERT CYCLIST TO THE RIGHT OF THE OBSTRUCTION).
5. WHERE BOLLARDS ARE PROVIDED AT SIDE ROADS, YIELD SYMBOLS SHALL BE PROVIDED ON THE APPROACHES TO THE AFOREMENTIONED.

CITY OF CAPE TOWN
ISIXEKO SASEKAPA
STAD KAAPSTAD

CITY OF CAPE TOWN
URBAN MOBILITY

TITLE

ADVANCE WARNING FOR OBSTRUCTIONS IN SHARED NMT FACILITIES (FOR CYCLISTS)

STANDARDS AND GUIDELINES DETAILS

SCALE	PAPER
N.T.S.	A4
DRAWING No.	REV
RM5	A

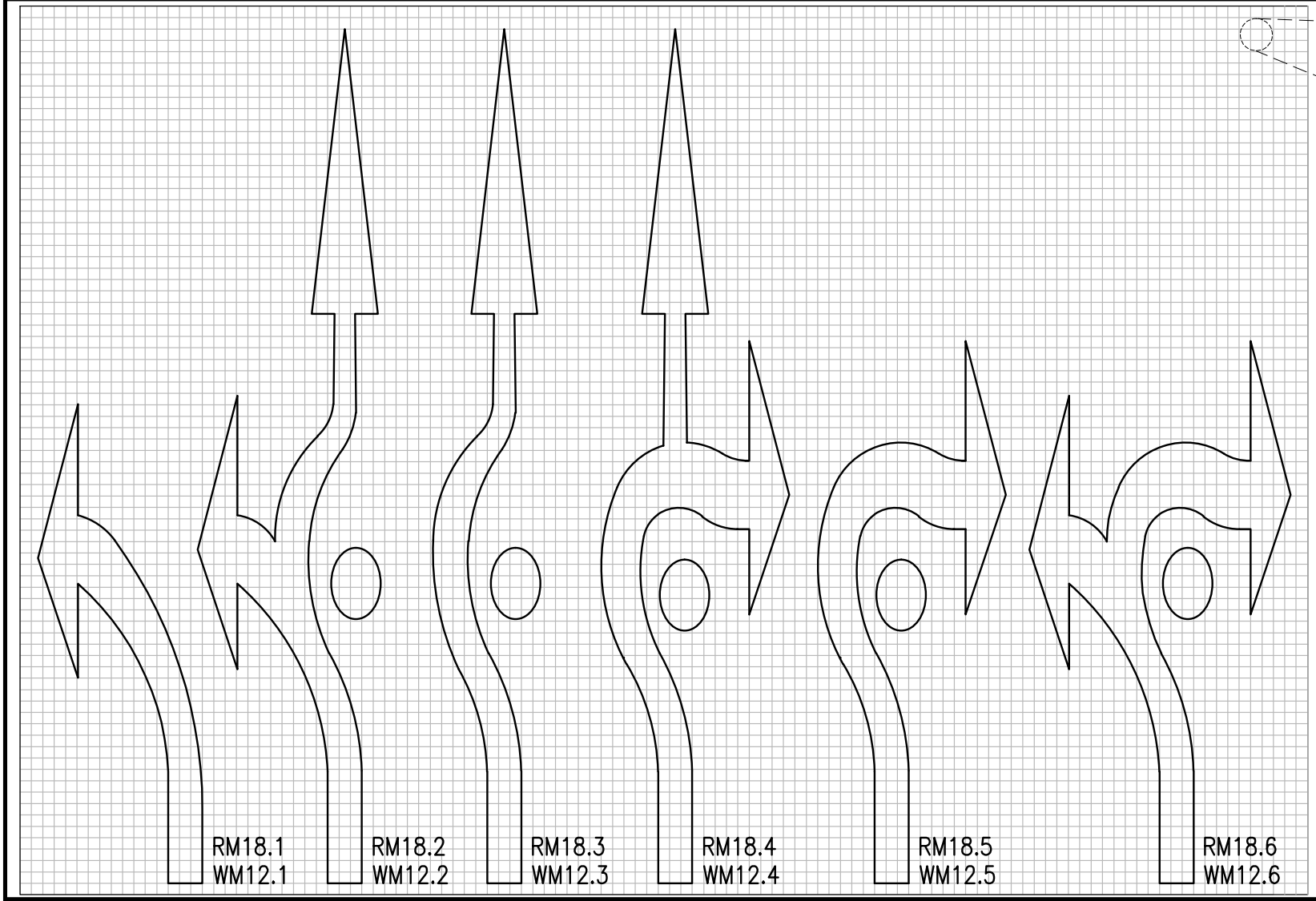

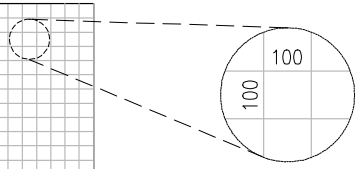

GRID SIZE

NOTES

DRAWING TO BE READ IN CONJUNCTION WITH **SECTION 3.3.8.**

CITY OF CAPE TOWN
ISIXEKO SASEKAPA
STAD KAAPSTAD

CITY OF CAPE TOWN
URBAN MOBILITY

TITLE

ROUNDABOUT "FISH HOOK" APPROACH ARROWS

STANDARDS AND GUIDELINES DETAILS

SCALE	PAPER
1:50	A4
DRAWING No.	REV
RM6	A

P:\CAD\R&SD\ITI_01 Design\T_1000B Standards\T_1000RS DESIGN_Roads and Stormwater\0002 Drawings_Version4.0\02 RM\RM6 – Fish Hook Roundabout Arrows_RevA.dwg

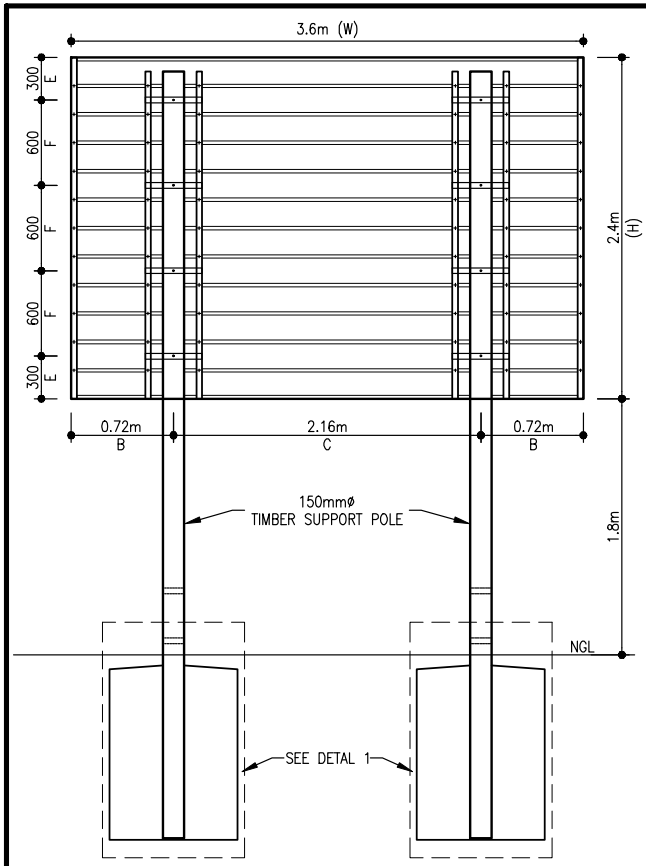

REAR ELEVATION: SUPPORTS POSITIONING

SCALE 1:50

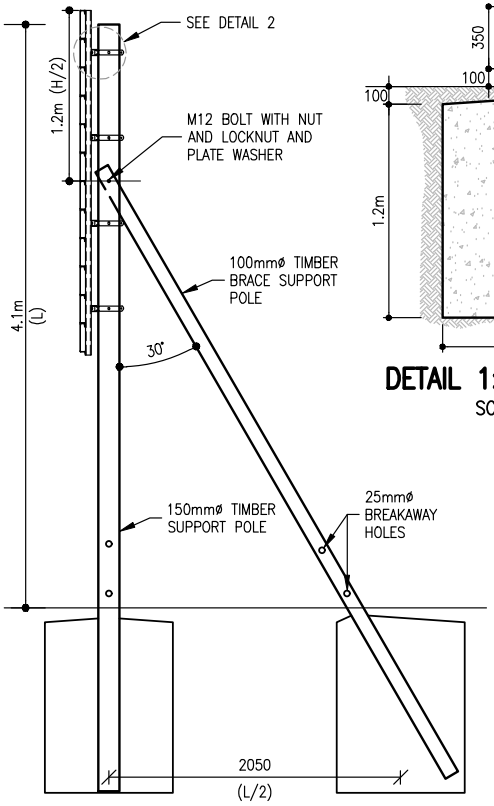

SIDE ELEVATION: BRACE DETAILS

SCALE 1:50

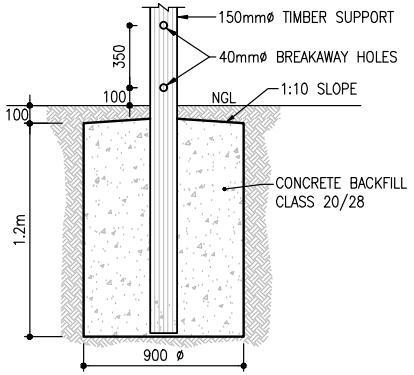

DETAIL 1: FOUNDATION

SCALE 1:30

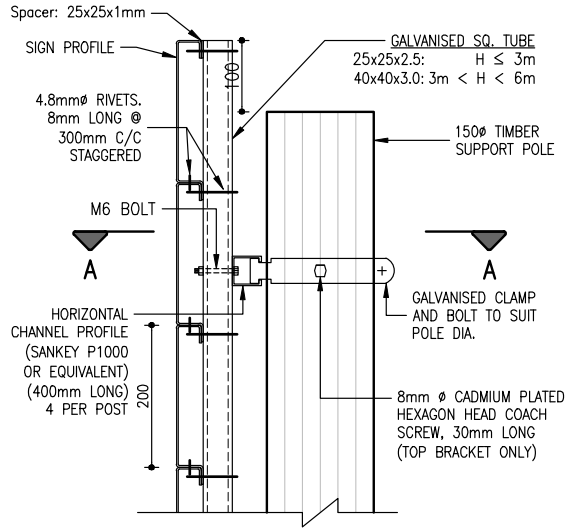

DETAIL 2: SUPPORT FIXING

SCALE 1:10



CONSTRUCTION SIGN EXAMPLE

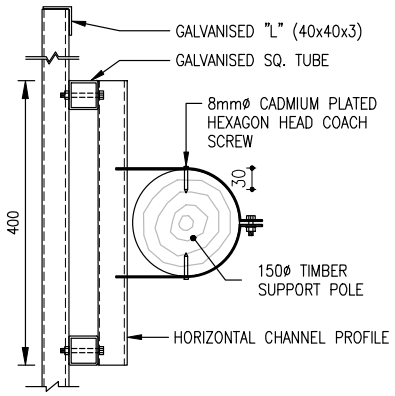

SECTION A–A: TOP ELEVATION

SCALE 1:10

NOTES:

1. CONSTRUCTION SIGN SHALL COMPLY WITH SARTSM–VOL2 SECTION 15.
2. THE POSITION OF CONTRACT SIGN BOARDS SHALL BE DISCUSSED WITH THE APPROVAL AUTHORITY PRIOR TO CONSTRUCTION.
3. FINAL DIMENSIONS OF THE SIGN MAY VARY.
4. THE DESIGN OF THE CONSTRUCTION SIGN BOARD SHALL BE SUBMITTED TO THE CITY'S COMMUNICATIONS DEPARTMENT FOR APPROVAL, PRIOR TO FINALISATION AND PRINTING.
5. MINIMUM REQUIREMENTS:
   - STEEL PROFILE: 200mm SECTIONS, 1.0mm THICKNESS, Z275 GALVANISED.
   - RECTANGULAR HOLLOW SECTIONS AND CHANNEL PROFILES: COLD FORMED OF COMMERCIAL QUALITY MILD STEEL.
   - BOLTS, NUTS AND WASHERS: HDG GRADE 8.8 (SANS 135).
   - ALL STEELWORK, INCLUDING BOLTS, NUTS AND WASHERS, SHALL BE HOT–DIP GALVANISED TO SANS 121 (ISO 1461) (HEAVY DUTY) PASSIVATION.
   - TIMBER POLES: CLASS H4 "TANALITH" TREATER OR EQUIVALENT (SANS 10005).

TABLE 1: DESIGN PARAMETERS

REF	VALUE	NOTES
B	W/5	W < 4m
C	3W/5	W < 4m
E	400 MAX	25x25x2.5 SQ TUBE
	600 MAX	40x40x3.0 SQ TUBE
F	800 MAX	25x25x2.5 SQ TUBE
	1200 MAX	40x40x3.0 SQ TUBE
H	2400	MAX: 3100
L	4100	MAX: 5000

NGL: NATURAL GROUND LEVEL

CITY OF CAPE TOWN
ISIXEKO SASEKAPA
STAD KAAPSTAD

CITY OF CAPE TOWN
URBAN MOBILITY

TITLE

CONSTRUCTION SIGN BOARD

STANDARDS AND GUIDELINES DETAILS

SCALE	PAPER
N.T.S.	A4
DRAWING No.	REV
RM7	A

P:\CAD\R&SD\ITI_01 Design\T_1000B Standards\T_1000RS DESIGN_Roads and Stormwater\0002 Drawings_Version4.0\02 RM\RM7 – Construction Sign Board_RevA.dwg

Detail Drawings

STORMWATER

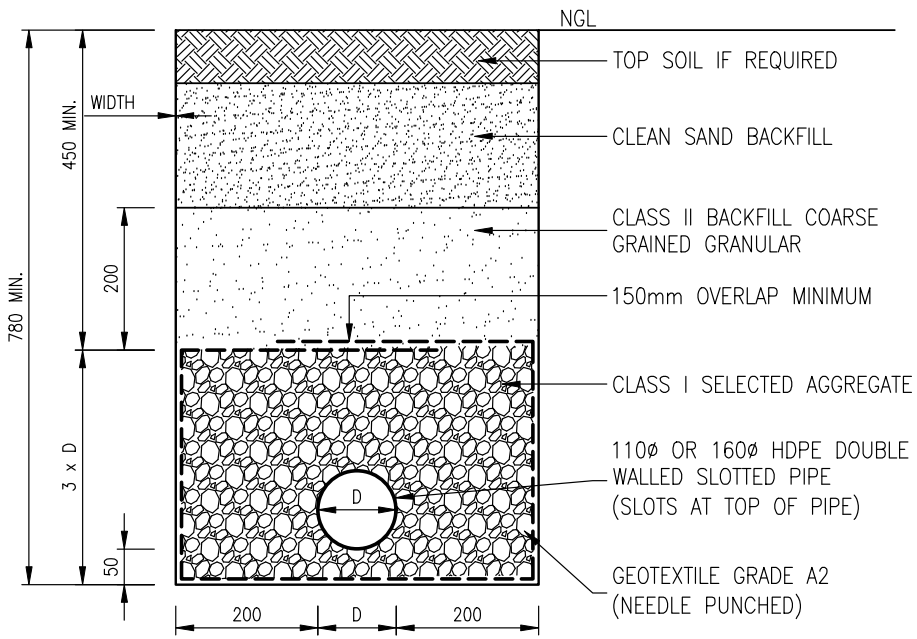

GENERAL CONDITIONS

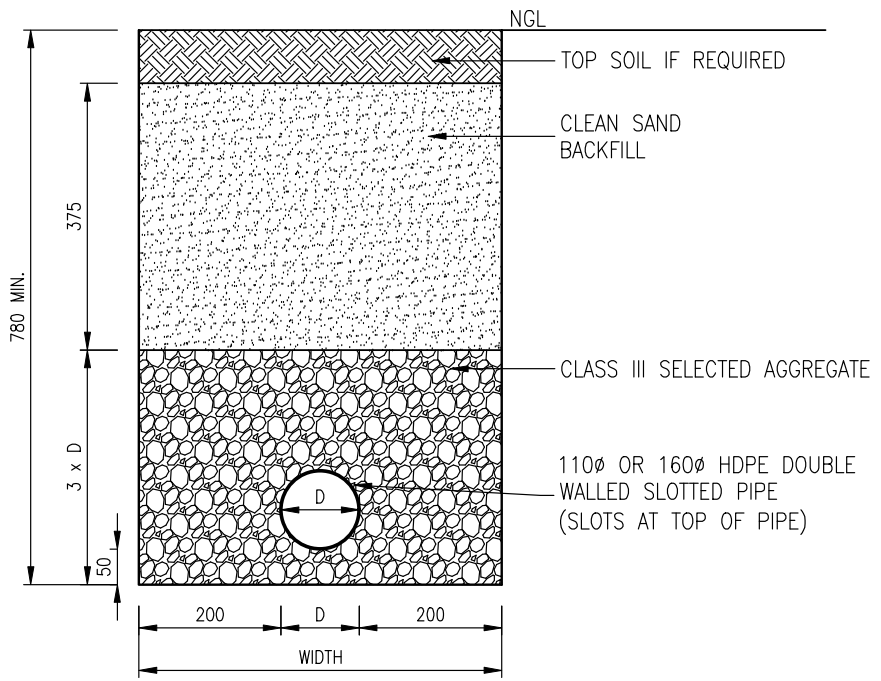

CLAY CONDITIONS

NOTES:

PIPE BACKFILL:

- CLASS I: CRUSHED ROCK STONE AGGREGATE WITH LITTLE OR NO FINES (9–38mm).
- CLASS II: COARSE GRAINED FREE DRAINING NON–COHESIVE GRANULAR SOILS (0.6–38mm, FINES < 5%).
- CLASS III: WELL MIXED & COMPACTED CRUSHED STONE, GRADED AS FOLLOWS:
  50% – 13mm CUBICAL
  25% – 6.75mm CUBICAL
  25% – 4.75mm TO DUST (WASHED CRUSHER DUST)

NGL: NATURAL GROUND LEVEL
FRL: FINISHED ROAD LEVEL
FSL: FINISHED SURFACE LEVEL

CITY OF CAPE TOWN
ISIXEKO SASEKAPA
STAD KAAPSTAD

CITY OF CAPE TOWN
URBAN MOBILITY

TITLE

SUB-SURFACE DRAIN: MAIN LINE

STANDARDS AND GUIDELINES DETAILS

SCALE	PAPER
1:20	A4
DRAWING No.	REV
SW1.1	C

P:\CAD\R&SD\ITI_01 Design\T_1000B Standards\T_1000RS DESIGN_Roads and Stormwater\0002 Drawings_Version4.0\03 SW\SW1.1 – Subsurface Drain_RevC.dwg

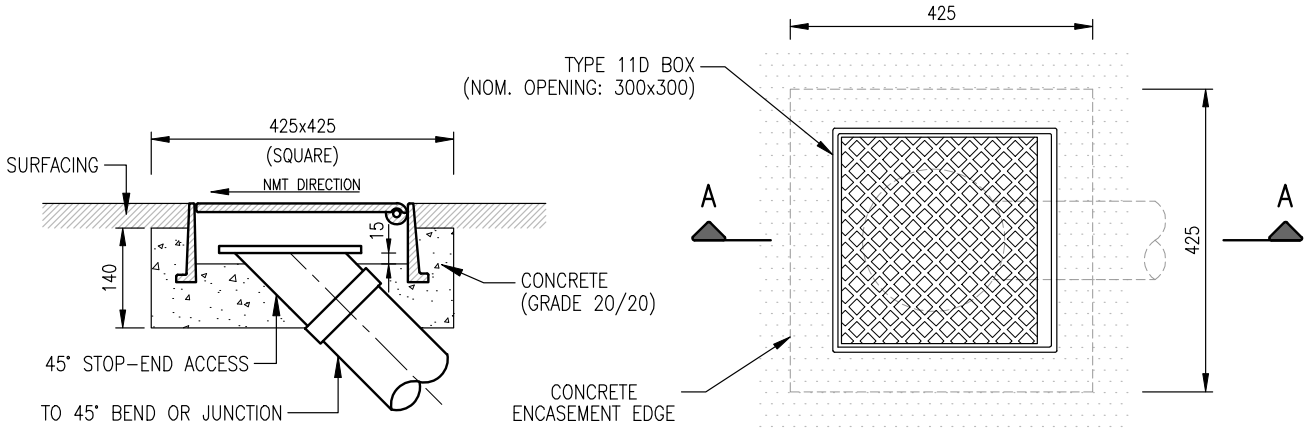

SECTION A–A

PLAN VIEW

RODDING EYE WITH ACCESS BOX

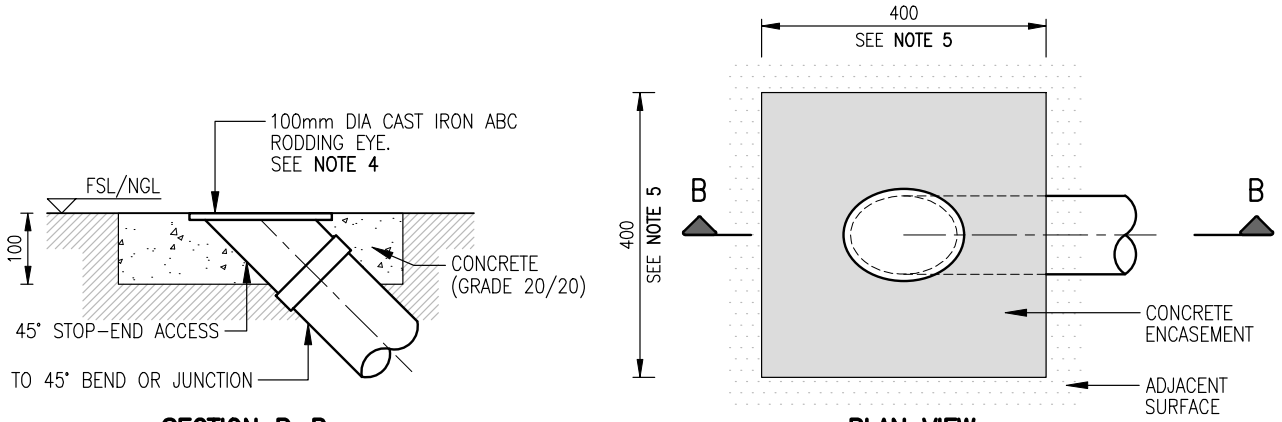

SECTION B–B

PLAN VIEW

RODDING EYE (NO ACCESS BOX)

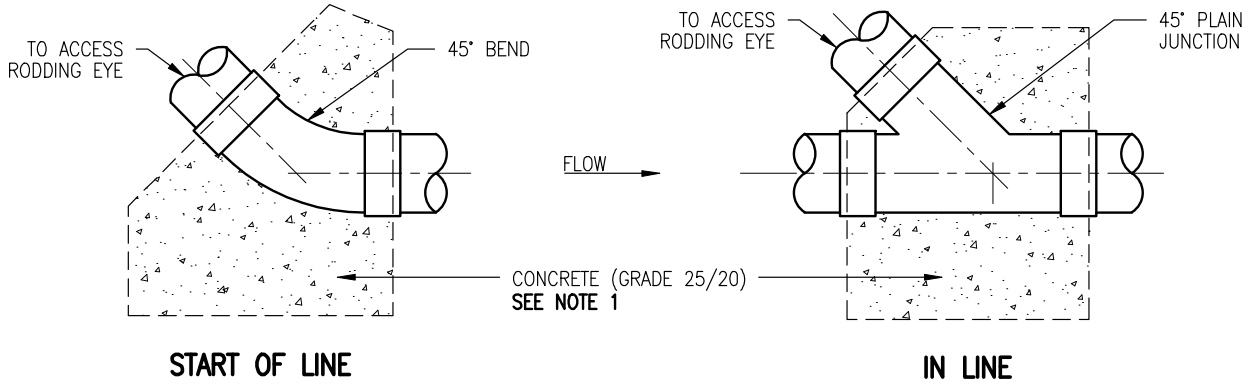

START OF LINE

IN LINE

JUNCTION TO MAIN (IN SECTION)

NOTES:

1. CONCRETE ENCASEMENT AT JUNCTION:
   - REQUIRED WHEN DEPTH TO INVERT LEVEL EXCEEDS 1.5m.
   - ALL COUPLINGS TO BE FLEXIBLE.
2. THE ACCESS BOX SHALL BE TYPE 11D (AS PER THE LATEST SANS 558) IN COLOUR "BLACK". THE ACCESS BOX SHALL NOT BE PAINTED, UNLESS REQUIRED BY THE APPROVAL AUTHORITY.
3. RODDING EYES SHALL NOT BE LOCATED WITHIN CARRIAGEWAY CROSSINGS OR ANY OTHER AREAS SUBJECTED TO VEHICULAR TRAFFIC.
4. ALTERNATIVE RODDING EYE MATERIALS MAY BE CONSIDERED BY THE APPROVAL AUTHORITY.
5. WHERE RODDING EYES ARE NOT LOCATED IN SURFACED AREAS, THE CONCRETE SURFACE ENCASEMENT SHALL BE INCREASED TO 600x600x100mm.
6. DRAWING TO BE READ IN CONJUNCTION WITH SECTION 10.4.4.

NGL: NATURAL GROUND LEVEL
FRL: FINISHED ROAD LEVEL
FSL: FINISHED SURFACE LEVEL

CITY OF CAPE TOWN
ISIXEKO SASEKAPA
STAD KAAPSTAD

CITY OF CAPE TOWN
URBAN MOBILITY

TITLE

SUB-SURFACE DRAIN: RODDING EYE & JUNCTION

STANDARDS AND GUIDELINES DETAILS

SCALE	PAPER
1:10	A4
DRAWING No.	REV
SW1.2	B

P:\CAD\R&SD\ITL_01 Design\T_1000B Standards\T_1000RS DESIGN_Roads and Stormwater\0002 Drawings_Version4.0\03 SW\SW1.2 – Subsurface Drain Rodding Eye_RevB.dwg

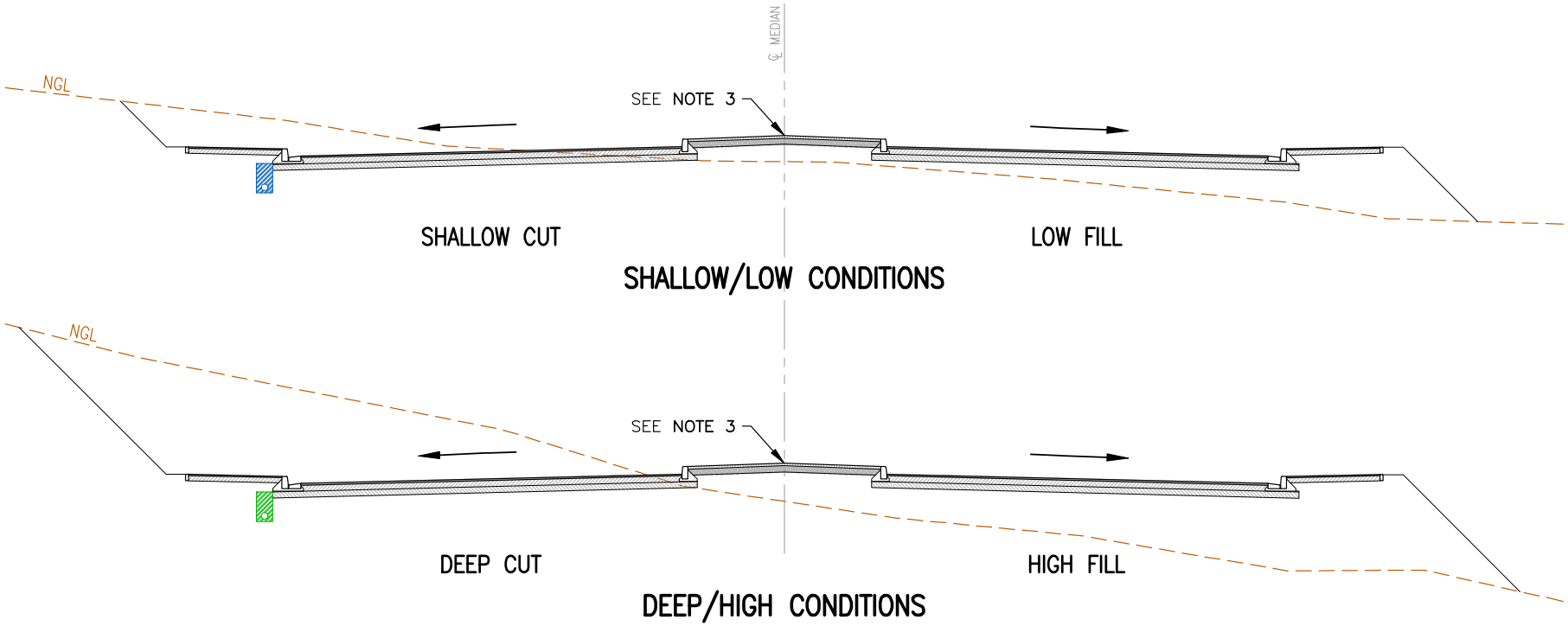

NOTES:

1. THE INDICATION OF SUB–SURFACE DRAINAGE IN THIS DRAWING SHOULD BE USED AS A GUIDELINE. ULTIMATELY, THE RESPONSIBILITY REMAINS WITH THE DESIGNER TO ENSURE THAT ADEQUATE SUB–SURFACE DRAINAGE IS PROVIDED FOR THE SITE SPECIFIC CONDITIONS.
2. THE PROVISION OF SUB–SURFACE DRAINS WILL DEPEND ON SITE SPECIFIC CONDITIONS, I.E. SOIL TYPE, WATER TABLE IN RAIN SEASON, NATURAL DRAINAGE DIRECTION, PRESENCE OF IRRIGATION, INFILTRATION, ETC.
3. MEDIAN ISLANDS;
   - 3.1. DESIGNS SHALL ADHERE TO THE REQUIREMENTS OF SECTION 4.2.4.3 OF TRH15. RAISED MEDIANS SHALL BE DESIGNED TO PREVENT INFILTRATION OF WATER. WHERE THE AFOREMENTIONED IS NOT POSSIBLE, EFFECTIVE SUBSURFACE DRAINAGE SHALL BE PROVIDED.
   - 3.2. MEDIAN ISLANDS SHALL BE GRADED TOWARDS THE CARRIAGEWAY(S) AND SHALL NOT HAVE A DEPRESSION (TO AVOID THE CONGREGATION OF WATER).
   - 3.3. SUB–SURFACE DRAINS SHALL TYPICALLY NOT BE REQUIRED WHEN THE MEDIAN ISLAND IS SURFACED. HOWEVER, **NOTE 2, 3.1 & 3.2** ABOVE SHALL STILL PREVAIL.
4. DRAWING TO BE READ IN CONJUNCTION WITH **SECTION 10.4.4.**

NGL: NATURAL GROUND LEVEL
FRL: FINISHED ROAD LEVEL
FSL: FINISHED SURFACE LEVEL

LEGEND:
SUB–SURFACE DRAIN PROVISION

REQUIRED

TYPICALLY REQUIRED

CITY OF CAPE TOWN
ISIXEKO SASEKAPA
STAD KAAPSTAD

CITY OF CAPE TOWN
URBAN MOBILITY

TITLE

PROVISION OF SUB-SURFACE DRAINS

STANDARDS AND GUIDELINES DETAILS

SCALE	PAPER
1:150	A4
DRAWING No.	REV
SW1.3	A

P:\CAD\R&SD\ITI_01 Design\T_1000B Standards\T_1000RS DESIGN_Roads and Stormwater\0002 Drawings_Version4.0\03 SW\SW1.3 – Subsurface Drain Provision_RevA.dwg

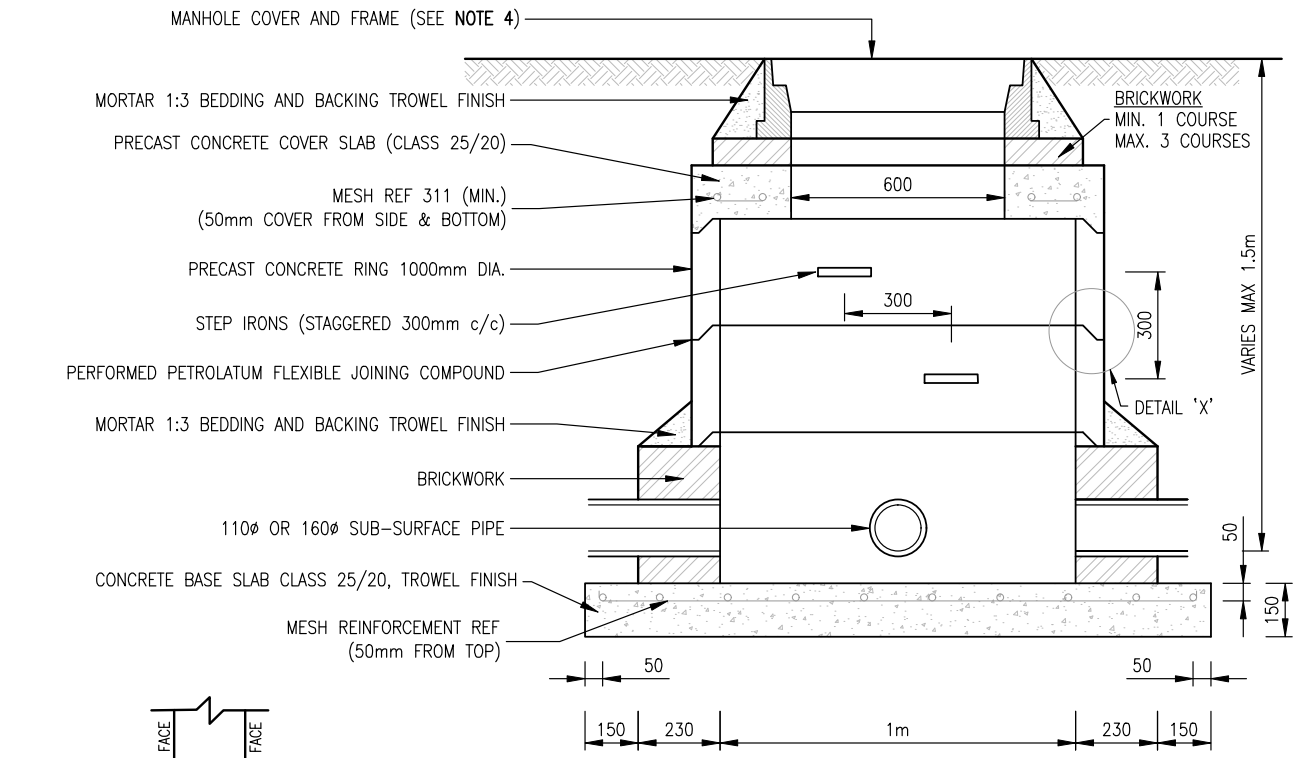

SECTION A–A

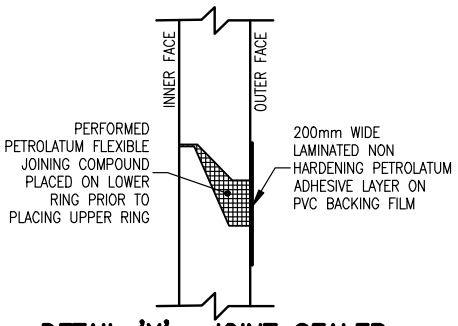

DETAIL 'X'– JOINT SEALER

N.T.S.

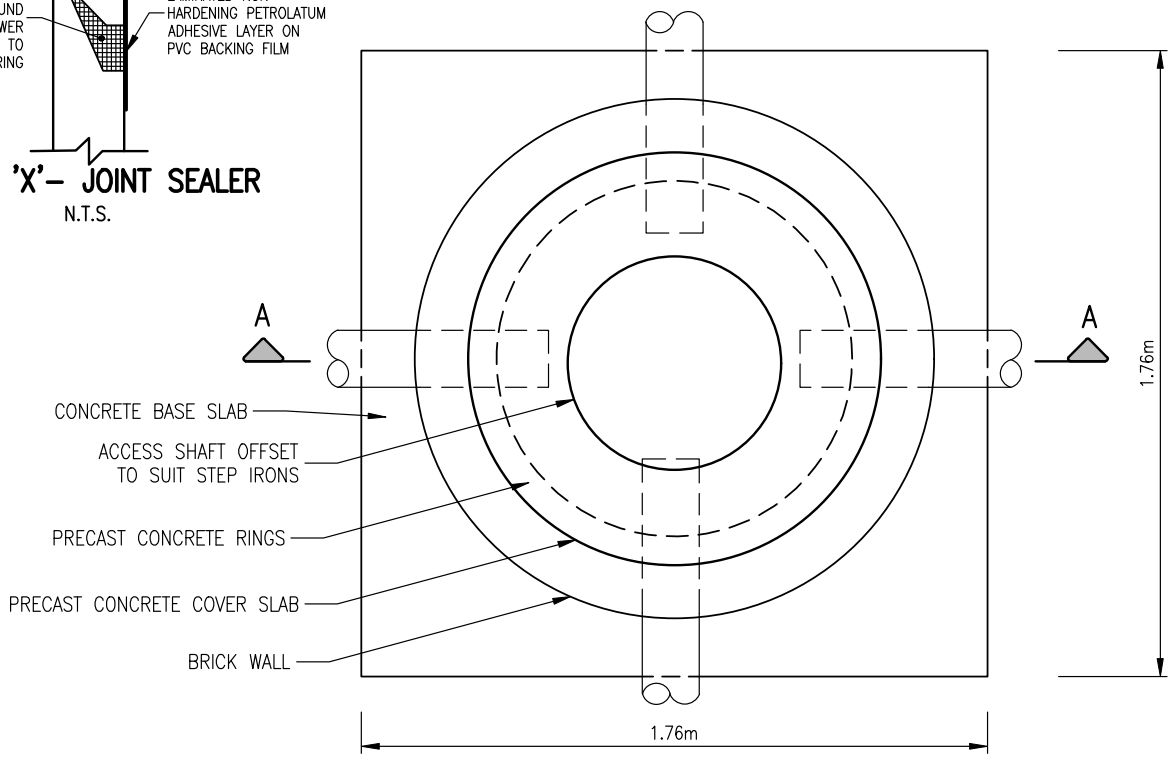

PLAN VIEW

NOTES:

1. BENCHING REQUIRED TO PREVENT STANDING WATER.
2. BRICKWORK: REFER TO SECTION **10.4.10** "SPECIFICATIONS FOR MASONRY UNITS".
3. MORTAR FOR BRICKWORK TO BE 1:3.
4. REFER TO SECTION **10.4.3** FOR MANHOLE COVER AND FRAME REQUIREMENTS.

CITY OF CAPE TOWN
ISIXEKO SASEKAPA
STAD KAAPSTAD

CITY OF CAPE TOWN
URBAN MOBILITY

TITLE

MANHOLE FOR SUB-SURFACE DRAINS

STANDARDS AND GUIDELINES DETAILS

SCALE	PAPER
1:20	A4
DRAWING No.	REV
SW2.1	C

P:\CAD\R&SD\TT_01 Design\T_1000B Standards\T_1000RS DESIGN_Roads and Stormwater\0002 Drawings_Version4.0\03 SW\SW2.1 – Manhole for Sub-surface Drain_RevC.dwg

TABLE 1
MANHOLE CHAMBER DIAMETER

NOM. PIPE DIA. (mm)	DEPTH 'y' (m)		
	y ≤ 2.5	2.6 < y ≤ 4.0	y > 4.0
	CHAMBER DIAMETER ø (mm)		
375	1000	1250	1500
450			
525	1250		
600			
675			
750	1500	1500	
825			
900			
1050	1800	1800	1800
1200			
1350	1950	1950	1950

TABLE 2
BRICKWORK & FLOOR/BASE SLAB

DEPTH "y" (m)	BRICKWORK (mm)	BASE/FLOOR SLAB		
		THICKNESS (mm)	CONCRETE CLASS	REINFORCING
y ≤ 2.5	230	150	25/20	NONE
2.5 < y ≤ 4.0	350	200	25/20	MESH 311
y > 4.0	350	250	25/20	MESH 395

TABLE 3
PRECAST CONCRETE RING: MINIMUM WALL THICKNESS

RING DIAMETER	WALL THICKNESS
1000	65
1250	75
1500	85
1800	95
1950	115

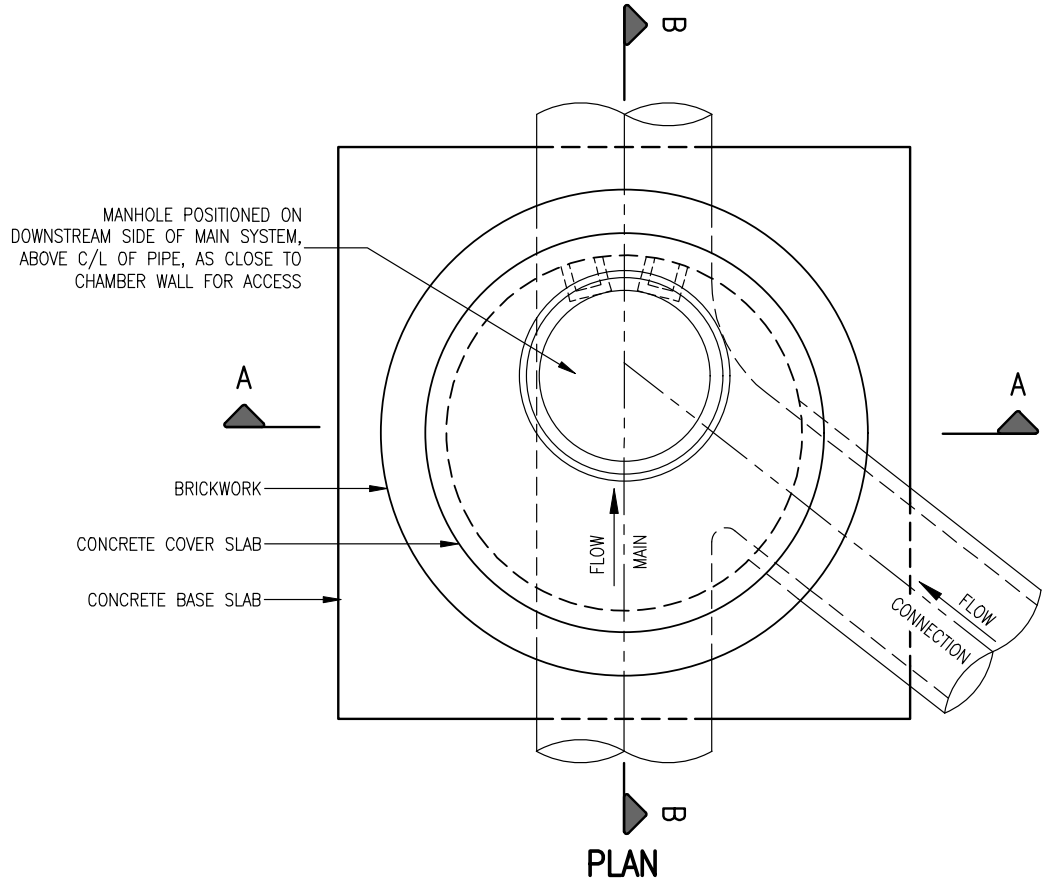

PLAN

NOTES:

1. REFER TO SECTION **10.4.3** FOR MANHOLE COVER AND FRAME REQUIREMENTS.
2. HINGED MANHOLE COVERS SITUATED IN THE ROAD SHALL OPEN TOWARDS ONCOMING TRAFFIC.
3. MANHOLE COVER LEVEL:
   - ROADWAY OR FOOTWAY: LEVEL WITH FRL/FSL.
   - OPEN SPACES: 500mm ABOVE NGL (UNLESS DIRECTED OTHERWISE).MINIMUM CENTER LINE RADIUS OF BENCHING: 2.5 X PIPE DIAMETER.
4. CHIMNEY OPENING TO BE PLACED AS CLOSE TO CENTER LINE OF THE MAIN INCOMING AND OUTGOING PIPE AS POSSIBLE.
5. BRICKWORK: SEE "SPECIFICATION FOR MASONRY UNITS", SECTION **10.4.10**.
6. ALL INTERNAL BRICKWORK TO HAVE SMOOTH FINISH (12mm PLASTERED WITH 1:3 MORTAR).
7. MANHOLES MUST CATER FOR ANY SITE SPECIFIC GROUND CONDITIONS. SHOULD THE MANHOLE DESIGN REQUIRE ALTERATIONS/AMENDMENTS FOR SUCH CONDITIONS, THE DESIGN MUST BE DISCUSSED WITH THE APPROVAL AUTHORITY.
8. REFER TO **DRAWING SW2.3** FOR MANHOLE WITH AN ACCESS SHAFT (DEEP TYPE).
9. MANHOLES FOR PIPE DIAMETERS GREATER THAN 1350mm SHALL REQUIRE A SPECIAL DESIGN.

NGL: NATURAL GROUND LEVEL
FRL: FINISHED ROAD LEVEL
FSL: FINISHED SURFACE LEVEL

SHEETS INFO:
SHEET 1: GENERAL NOTES, TABLES 1, 2 & 3
SHEET 2: SECTION A–A & B–B

CITY OF CAPE TOWN
ISIXEKO SASEKAPA
STAD KAAPSTAD

CITY OF CAPE TOWN
URBAN MOBILITY

TITLE

STORMWATER MANHOLE
WITHOUT ACCESS SHAFT (SHALLOW TYPE)

STANDARDS AND GUIDELINES DETAILS

SHEET 1

SCALE	PAPER
1:25	A4
DRAWING No.	REV
SW2.2A	C

P:\CAD\R&SD\TL_01 Design\T_1000B Standards\T_1000RS DESIGN_Roads and Stormwater\0002 Drawings_Version4.0\03 SW\SW2.2A – Manhole for SW Pipes (Shallow Type)_RevC.dwg

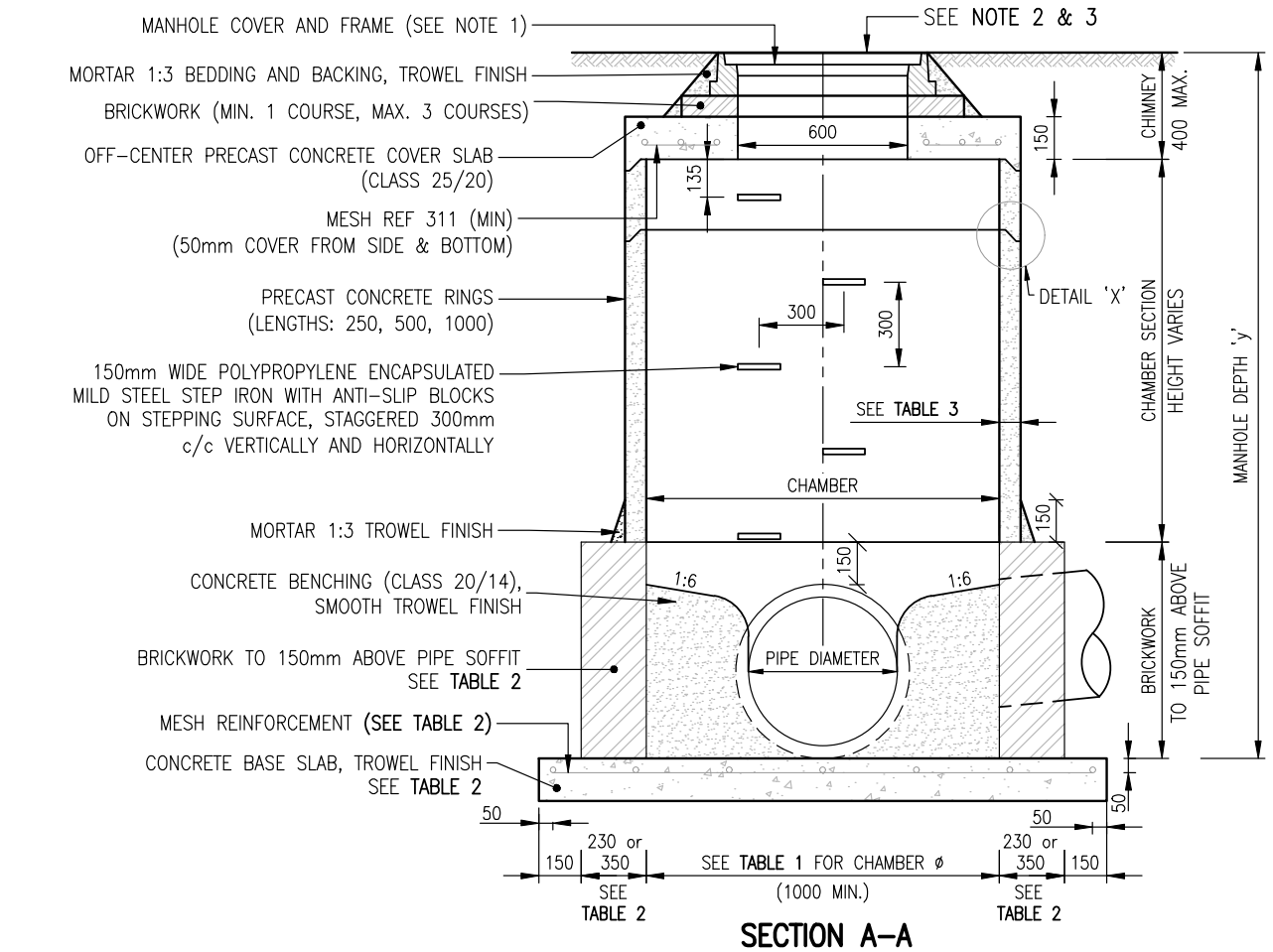

SECTION A–A

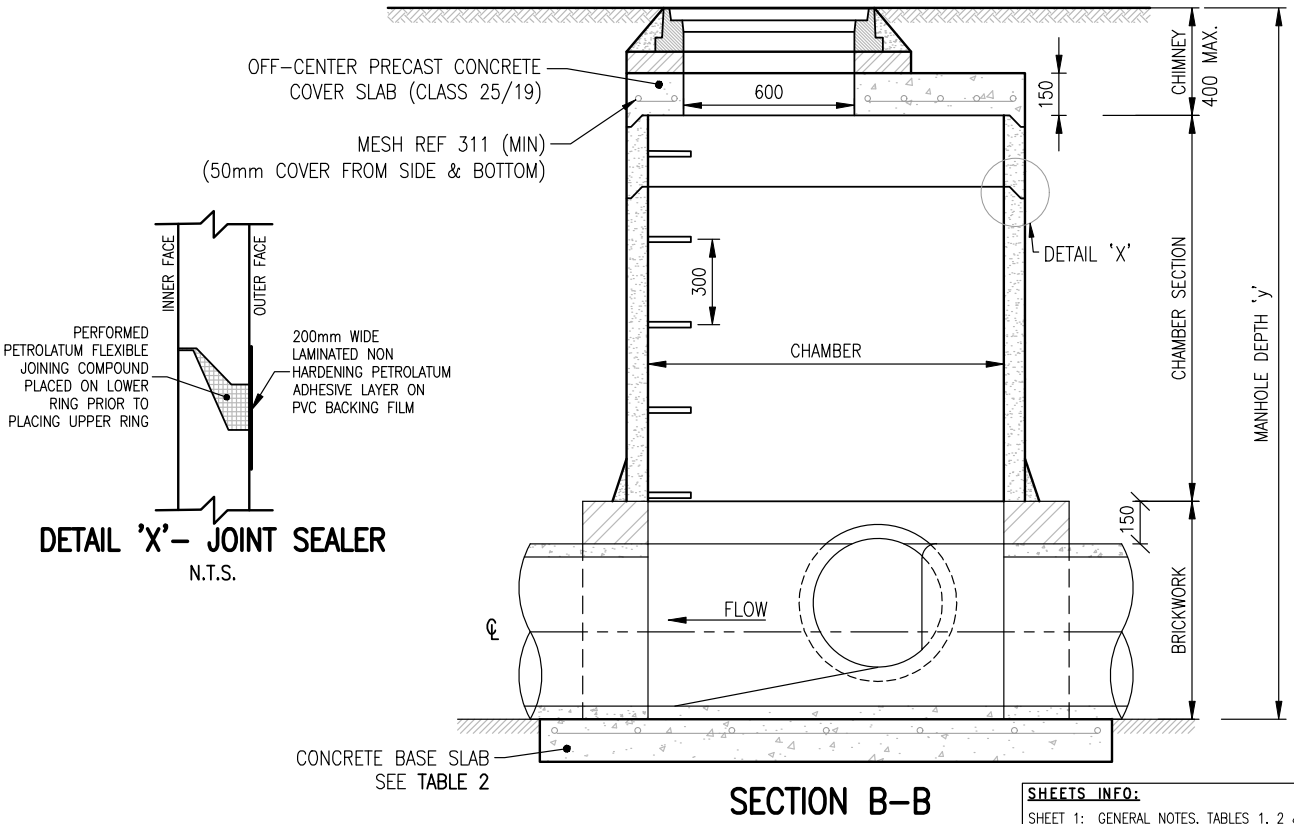

SECTION B–B

DETAIL 'X'– JOINT SEALER

N.T.S.

SHEETS INFO:

SHEET 1: GENERAL NOTES, TABLES 1, 2 & 3
SHEET 2: SECTION A–A & B–B

CITY OF CAPE TOWN
ISIXEKO SASEKAPA
STAD KAAPSTAD

CITY OF CAPE TOWN
URBAN MOBILITY

TITLE

STORMWATER MANHOLE WITHOUT ACCESS SHAFT (SHALLOW TYPE)

STANDARDS AND GUIDELINES DETAILS

SHEET 2

SCALE	PAPER
1:25	A4
DRAWING No.	REV
SW2.2B	D

P:\CAD\R&SD\TT_01 Design\T_1000B Standards\T_1000RS DESIGN_Roads and Stormwater\0002 Drawings_Version4.0\03 SW\SW2.2B – Manhole for SW Pipes (Shallow Type)_RevD.dwg

TABLE 1
MANHOLE CHAMBER DIAMETER

NOM. PIPE DIA. (mm)	DEPTH 'y' (m)		
	y ≤ 2.5	2.6 < y ≤ 4.0	y > 4.0
	CHAMBER DIAMETER ø (mm)		
375	1000	1250	1500
450			
525	1250		
600			
675			
750	1500	1500	
825			
900			
1050	1800	1800	1800
1200			
1350	1950	1950	1950

TABLE 2
BRICKWORK & FLOOR/BASE SLAB

DEPTH "y" (m)	BRICKWORK (mm)	BASE/FLOOR SLAB		
		THICKNESS (mm)	CONCRETE CLASS	REINFORCING
y ≤ 2.5	230	150	25/20	NONE
2.5 < y ≤ 4.0	350	200	25/20	MESH 311
y > 4.0	350	250	25/20	MESH 395

TABLE 3
PRECAST CONCRETE RING: MINIMUM WALL THICKNESS

RING DIAMETER	WALL THICKNESS
1000	65
1250	75
1500	85
1800	95
1950	115

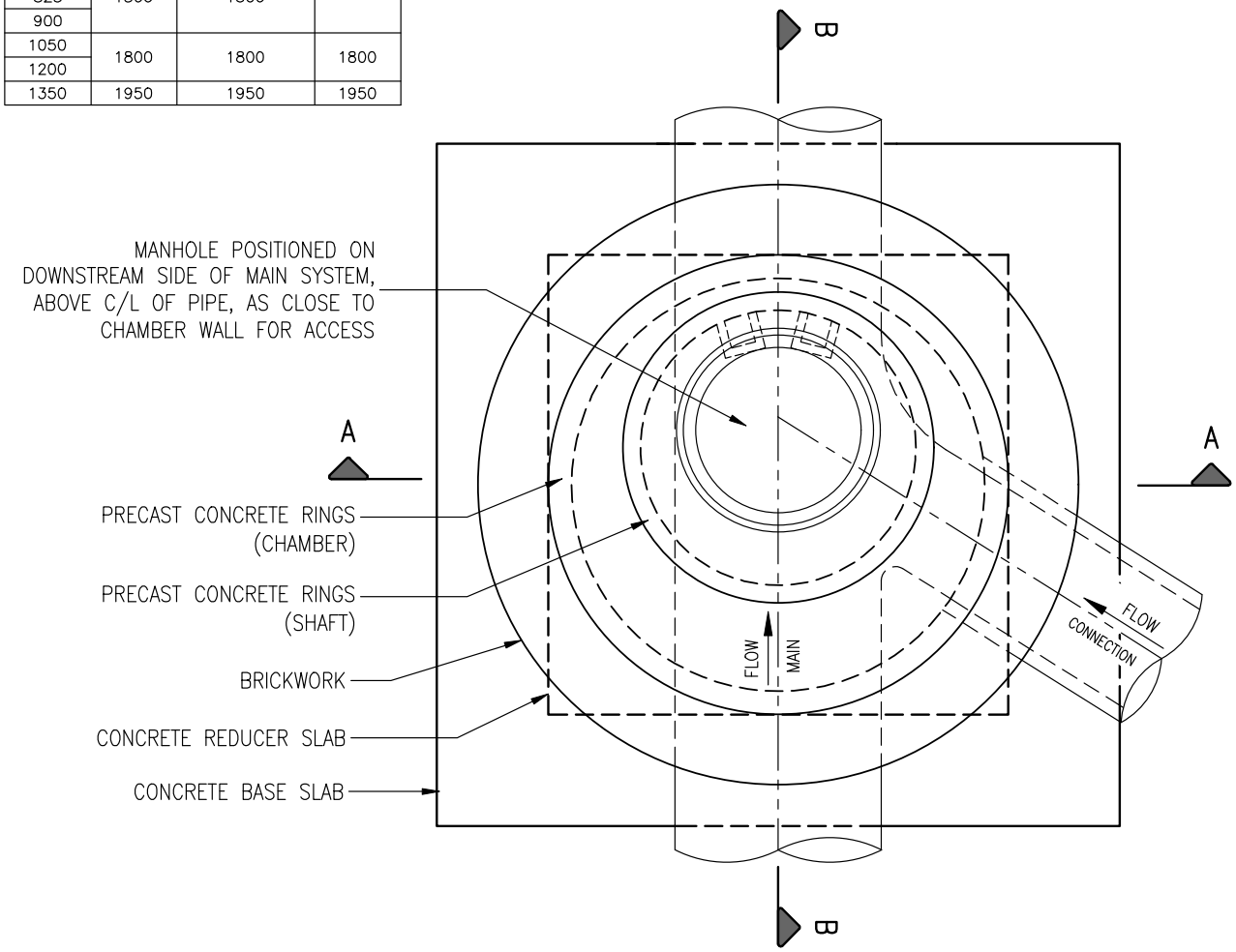

PLAN

NOTES:

1. REFER TO SECTION **10.4.3** FOR MANHOLE COVER AND FRAME REQUIREMENTS.
2. HINGED MANHOLE COVERS SITUATED IN THE ROAD SHALL OPEN TOWARDS ONCOMING TRAFFIC.
3. MANHOLE COVER LEVEL:
   - ROADWAY OR FOOTWAY: LEVEL WITH FRL/FSL.
   - OPEN SPACES: 500mm ABOVE NGL (UNLESS DIRECTED OTHERWISE).MINIMUM CENTER LINE RADIUS OF BENCHING: 2.5 X PIPE DIAMETER.
4. MINIMUM CENTER LINE RADIUS OF BENCHING: 2.5 X PIPE DIAMETER.
5. CHIMNEY OPENING TO BE PLACED AS CLOSE TO CENTER LINE OF THE MAIN INCOMING AND OUTGOING PIPE AS POSSIBLE.
3. BRICKWORK: SEE SECTION **10.4.10** "SPECIFICATION FOR MASONRY UNITS".
4. ALL INTERNAL BRICKWORK TO HAVE SMOOTH FINISH (12mm PLASTERED WITH 1:3 MORTAR).
6. MANHOLES MUST CATER FOR ANY SITE SPECIFIC GROUND CONDITIONS. SHOULD THE MANHOLE DESIGN REQUIRE ALTERATIONS/AMENDMENTS FOR SUCH CONDITIONS, THE DESIGN MUST BE DISCUSSED WITH THE APPROVAL AUTHORITY.
7. REFER TO **DRAWING SW2.2** FOR MANHOLE WITHOUT AN ACCESS SHAFT (SHALLOW TYPE).
8. MANHOLES FOR PIPE DIAMETERS GREATER THAN 1350mm SHALL REQUIRE A SPECIAL DESIGN.
9. REFER TO SECTION **10.4.3** FOR SAFETY IMPROVEMENTS FOR DEEP MANHOLES.

NGL: NATURAL GROUND LEVEL
FRL: FINISHED ROAD LEVEL
FSL: FINISHED SURFACE LEVEL

SHEETS INFO:
SHEET 1: GENERAL NOTES, TABLES 1, 2 & 3
SHEET 2: SECTION A–A
SHEET 3: SECTION B–B

CITY OF CAPE TOWN
ISIXEKO SASEKAPA
STAD KAAPSTAD

CITY OF CAPE TOWN
URBAN MOBILITY

TITLE

STORMWATER MANHOLE WITH ACCESS SHAFT (DEEP TYPE)

STANDARDS AND GUIDELINES DETAILS

SHEET 1

SCALE	PAPER
1:25	A4
DRAWING No.	REV
SW2.3A	C

P:\CAD\R&SD\TT_01 Design\T_1000B Standards\T_1000RS DESIGN_Roads and Stormwater\0002 Drawings_Version4.0\03 SW\SW2.3A – Manhole for SW Pipes (Deep Type)_RevC.dwg

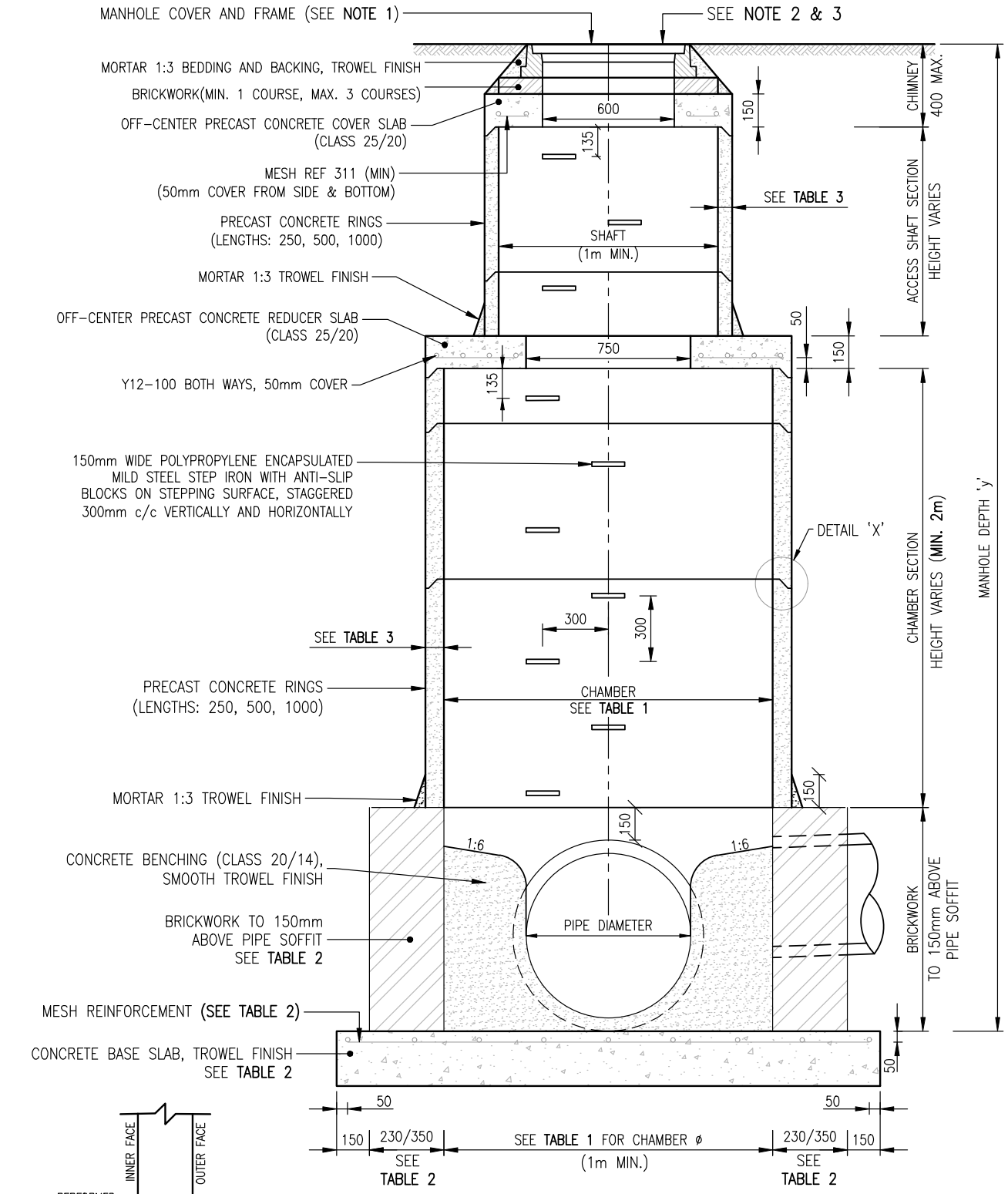

SECTION A-A

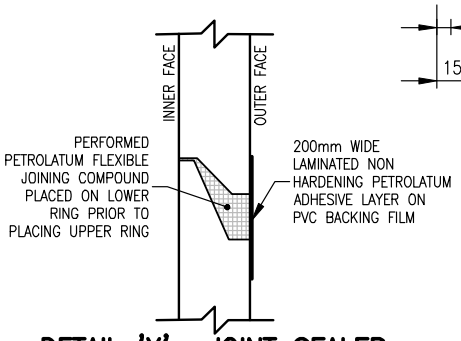

DETAIL 'X'- JOINT SEALER

N.T.S.

SHEETS INFO:

SHEET 1: GENERAL NOTES, TABLES 1, 2 & 3
SHEET 2: SECTION A-A
SHEET 3: SECTION B-B

CITY OF CAPE TOWN
ISIXEKO SASEKAPA
STAD KAAPSTAD

CITY OF CAPE TOWN
URBAN MOBILITY

TITLE

STORMWATER MANHOLE WITH ACCESS SHAFT (DEEP TYPE)

STANDARDS AND GUIDELINES DETAILS

SHEET 2

SCALE	PAPER
1:25	A4
DRAWING No.	REV
SW2.3B	D

P:\CAD\R&SD\TT_01 Design\T_1000B Standards\T_1000RS DESIGN_Roads and Stormwater\0002 Drawings_Version4.0\03 SW\SW2.3B - Manhole for SW Pipes (Deep Type)_RevD.dwg

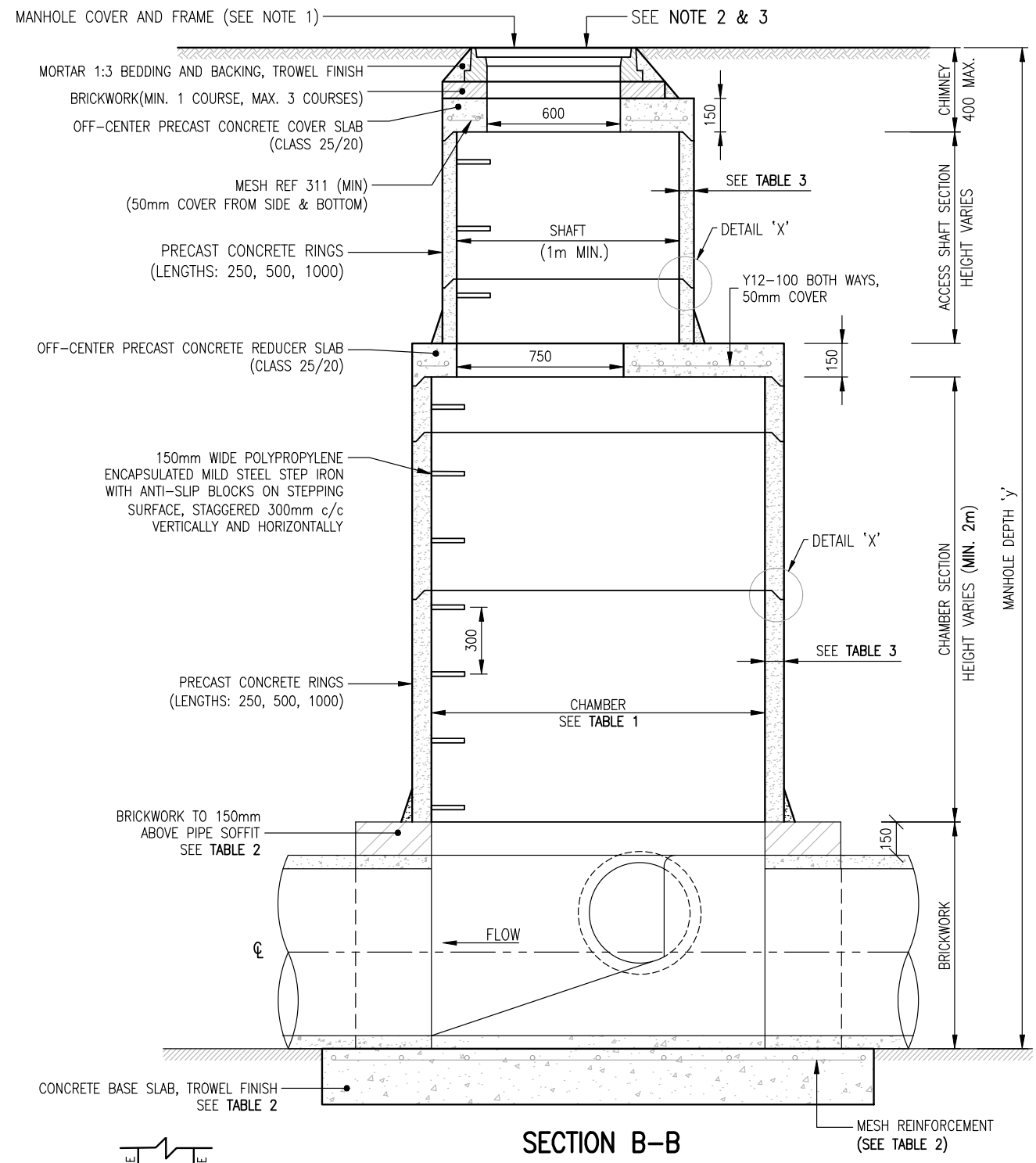

SECTION B-B

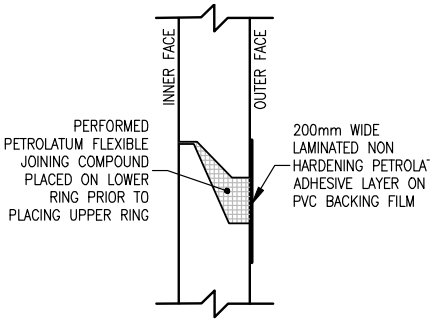

DETAIL 'X'- JOINT SEALER

N.T.S.

NOTES:

1. SEE SHEET 2 "SECTION A-A" FOR COMPLETE ANNOTATIONS.

SHEETS INFO:

SHEET 1: GENERAL NOTES TABLES 1, 2 & 3
SHEET 2: SECTION A-A
SHEET 3: SECTION B-B

CITY OF CAPE TOWN
ISIXEKO SASEKAPA
STAD KAAPSTAD

CITY OF CAPE TOWN
URBAN MOBILITY

TITLE

STORMWATER MANHOLE WITH ACCESS SHAFT (DEEP TYPE)

STANDARDS AND GUIDELINES DETAILS

SHEET 3

SCALE	PAPER
1:25	A4
DRAWING No.	REV
SW2.3C	D

P:\CAD\R&SD\TT_01 Design\T_1000B Standards\T_1000RS DESIGN_Roads and Stormwater\0002 Drawings_Version4.0\03 SW\SW2.3C - Manhole for SW Pipes (Deep Type)_RevD.dwg



RENDERED COVER AND FRAME

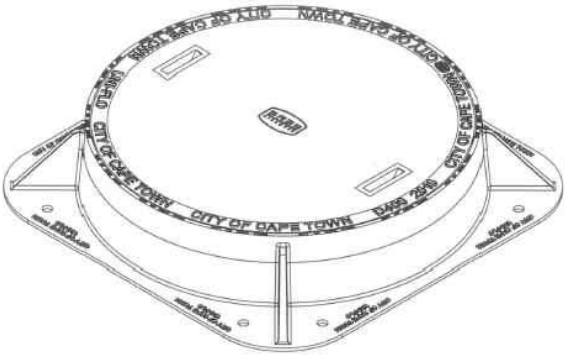

ASSEMBLED COVER AND FRAME

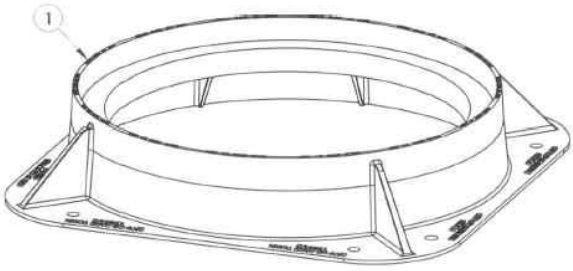

COMPONENT 1: FRAME

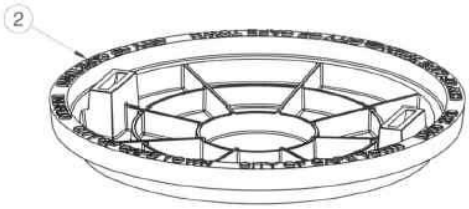

COMPONENT 2: COVER



COMPONENT 3: CONCRETE INFILL

COMPONENT DETAILS & SPECIFICATIONS					
#	Component	APPROXIMATE MASS	SIZE	MATERIAL	CLASSIFICATION
1	Frame	48kg	800x800x150mm (L x W x H)	Ductile Iron	Class D400 (400kN)
2	Cover	48kg	694mm ø ; 100mm (H)	Ductile Iron	Class D400 (400kN)
3	Concrete Infill	53kg	Volume = 0.022m^3	Concrete	(45MPa 28-day Compressive Strength)

NOTES:

1. THE COVER AND FRAME SHALL CONFORM TO THE LATEST SANS 50124.
2. DUCTILE IRON SHALL CONFORM TO THE LATEST SANS 936.

CITY OF CAPE TOWN
ISIXEKO SASEKAPA
STAD KAAPSTAD

CITY OF CAPE TOWN
URBAN MOBILITY

TITLE

DUCTILE IRON MANHOLE COVER AND FRAME, WITH CONCRETE INFILL

STANDARDS AND GUIDELINES DETAILS

SCALE	PAPER
NTS	A4
DRAWING No.	REV
SW2.4	A

\\CBD-CIVIC-FS01\Apps\CAD\R&SD\TI_01 Design\T_1000B Standards\T_1000RS DESIGN_Roads and Stormwater\0002 Drawings_Version4.0\03 SW\SW2.4 - Concrete Infill Manhole Cover & Frame_RevA.dwg

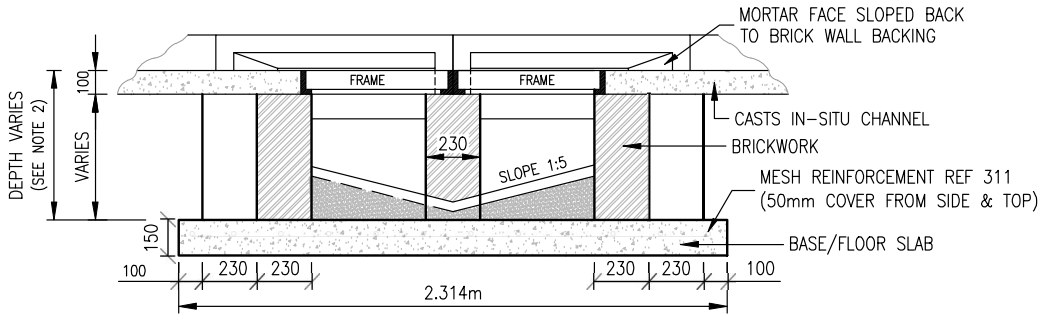

SECTION A–A

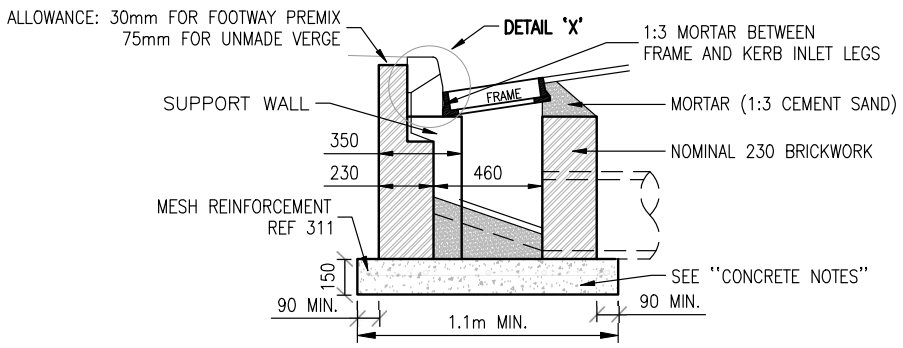

SECTION B–B

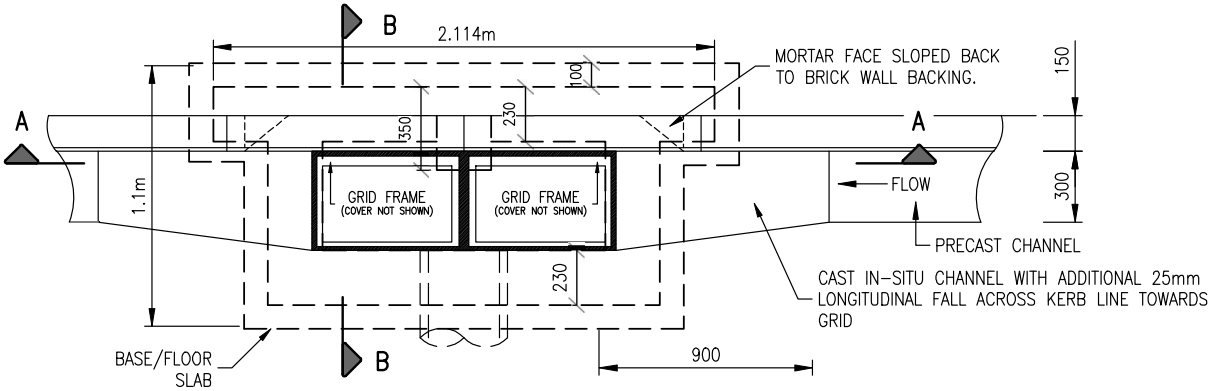

PLAN

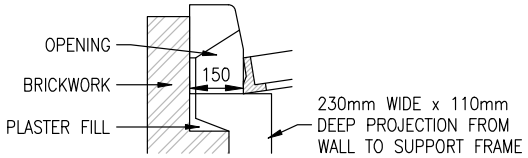

DETAIL 'X'

NOTES: CONCRETE CLASS

BASE/FLOOR	25/20
BENCHING	20/14
IN-SITU CAST CHANNEL	30/20

GENERAL NOTES:

1. HINGED COVERS ARE TO OPEN TOWARDS SIDEWALK AND NOT THE ROAD.
2. CATCHPIT DEPTH:
   - MINIMUM = 0.75m
   - MAXIMUM = 1.20m
3. BRICKWORK: SEE SECTION 10.4.10 "SPECIFICATION FOR MASONRY UNITS".
4. ALL INTERNAL BRICKWORK TO HAVE SMOOTH FINISH.
5. REFER TO DRAWING SW4 FOR INLET KERB DETAILS.

CITY OF CAPE TOWN
ISIXEKO SASEKAPA
STAD KAAPSTAD

CITY OF CAPE TOWN
URBAN MOBILITY

TITLE

STORMWATER CATCHPIT
TYPE A: DOUBLE KERB & GRID INLET COMBINATION

STANDARDS AND GUIDELINES DETAILS

SCALE	PAPER
N.T.S.	A4
DRAWING No.	REV
SW3.1	D

P:\CAD\R&SD\ITI_01 Design\T_1000B Standards\T_1000RS DESIGN_Roads and Stormwater\0002 Drawings_Version4.0\03 SW\SW3.1 – Double Kerb & Grid Inlet Combination Catchpit_RevD.dwg

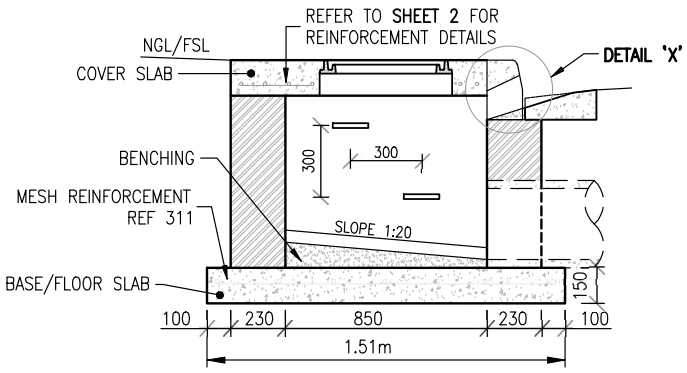

SECTION B–B

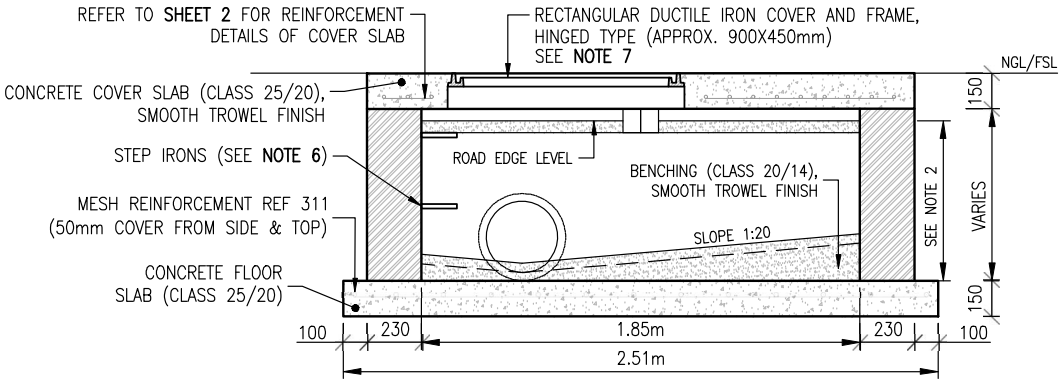

SECTION A–A

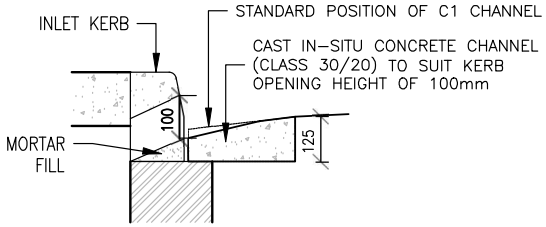

DETAIL 'X'

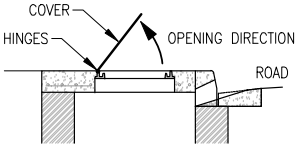

DETAIL 1:
COVER OPENING DIRECTION

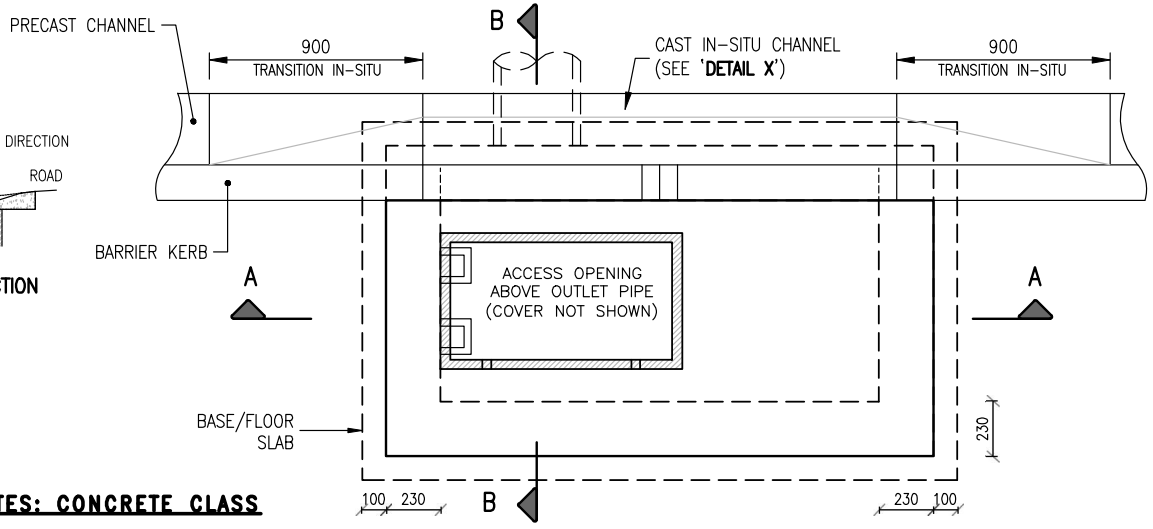

PLAN VIEW

GENERAL NOTES:

1. HINGED COVER TO OPEN AWAY FROM ROADWAY. SEE **DETAIL 1**.
2. CATCHPIT DEPTH (RELATIVE TO ROAD EDGE LEVEL):
   - MINIMUM = 0.75m
   - MAXIMUM = 1.20m
3. BRICKWORK: SEE SECTION **10.4.10** "SPECIFICATION FOR MASONRY UNITS".
4. ALL INTERNAL BRICKWORK TO HAVE SMOOTH FINISH.
5. REFER TO DRAWING SW4 FOR INLET KERB DETAILS.
5. STEP IRONS TO BE PROVIDED WHERE CATCHPIT DEPTH EXCEEDS 1m. TYPE: 150mm WIDE POLYPROPYLENE ENCAPSULATED MILD STEEL, WITH ANTI–SLIP BLOCKS ON STEPPING SURFACE.

NOTES: CONCRETE CLASS

BASE/FLOOR	25/20
COVER SLAB	25/20
BENCHING	20/14
IN–SITU CAST CHANNEL	30/20

NGL: NATURAL GROUND LEVEL
FRL: FINISHED ROAD LEVEL
FSL: FINISHED SURFACE LEVEL

SHEET INDEX:

SHEET 1: CATCHPIT DETAILS
SHEET 2: REINFORCEMENT DETAILS

CITY OF CAPE TOWN
ISIXEKO SASEKAPA
STAD KAAPSTAD

CITY OF CAPE TOWN
URBAN MOBILITY

TITLE

STORMWATER CATCHPIT
TYPE B: DOUBLE KERB INLET (2 x 1m INLETS)
CATCHPIT DETAILS

STANDARDS AND GUIDELINES DETAILS

SHEET 1

SCALE	PAPER
N.T.S.	A4
DRAWING No.	REV
SW3.2A	A

P:\CAD\R&SD\ITI_01 Design\T_1000B Standards\T_1000RS DESIGN_Roads and Stormwater\0002 Drawings_Version4.0\03 SW\SW3.2A – Double Kerb Inlet Catchpit_RevA.dwg

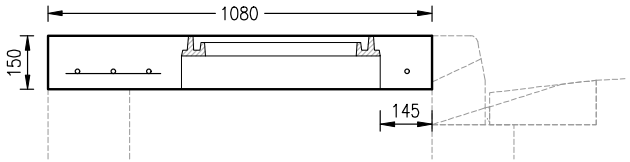

SECTION B–B

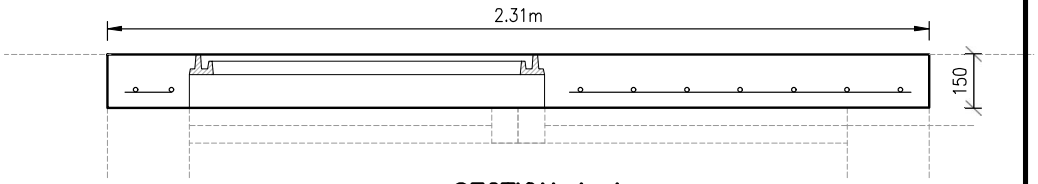

SECTION A–A

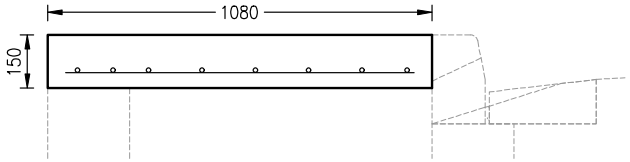

SECTION C–C

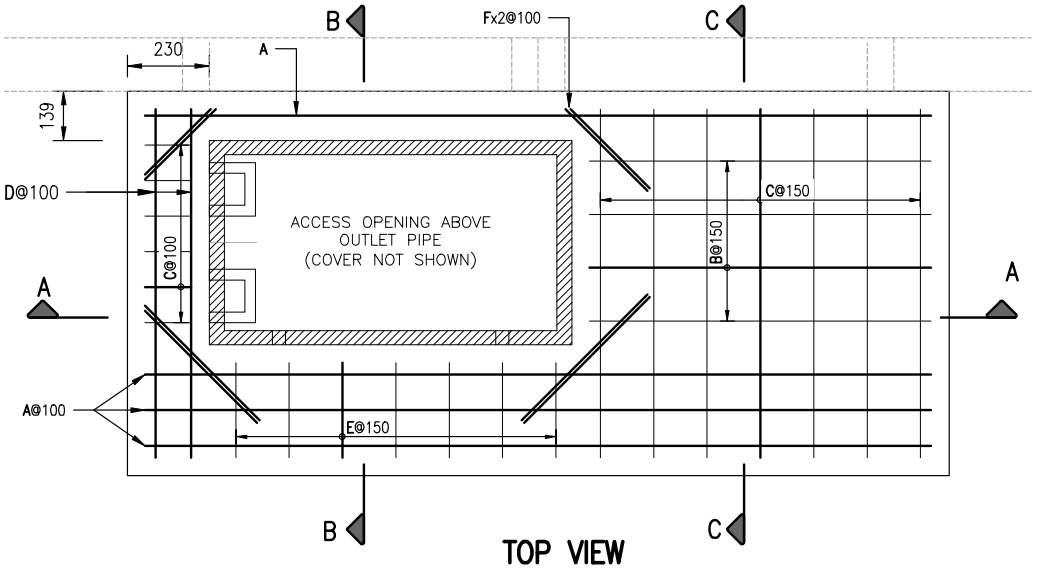

TOP VIEW

BENDING SCHEDULE					
COVER SLAB					
BAR	No.	DIA	LENGTH	SKETCH	SLAB POSITION
A	4	Y12	2210		BOTTOM
B	4	Y12	960		BOTTOM
C	6	Y12	130		BOTTOM
D	9	Y12	980		BOTTOM
E	7	Y12	260		BOTTOM
F	16	Y12	500 (CUT TO SUIT)		TOP & BOTTOM

GENERAL NOTES

1. COVER SLAB SHALL BE CONCRETE CLASS 25/20.
2. THE COVER SLAB SHALL BE PRECAST, WITH THE COVER AND FRAME TO BE CAST WITH SLAB.
3. MINIMUM COVER FOR STEEL REINFORCEMENT SHALL BE 50mm, UNLESS INDICATED OTHERWISE.
4. BARS SHALL BE BENT IN ACCORDANCE WITH SANS 82.

SHEET INDEX:

SHEET 1: CATCHPIT DETAILS
SHEET 2: REINFORCEMENT DETAILS

CITY OF CAPE TOWN
ISIXEKO SASEKAPA
STAD KAAPSTAD

CITY OF CAPE TOWN
URBAN MOBILITY

TITLE

STORMWATER CATCHPIT
TYPE B: DOUBLE KERB INLET (2 x 1m INLETS)
COVER SLAB REINFORCEMENT DETAILS

STANDARDS AND GUIDELINES DETAILS

SHEET 2

SCALE	PAPER
1:20	A4
DRAWING No.	REV
SW3.2B	A

P:\CAD\R&SD\ITI_01 Design\T_1000B Standards\T_1000RS DESIGN_Roads and Stormwater\0002 Drawings_Version4.0\03 SW\SW3.2B – Double Kerb Inlet Catchpit_RevA.dwg

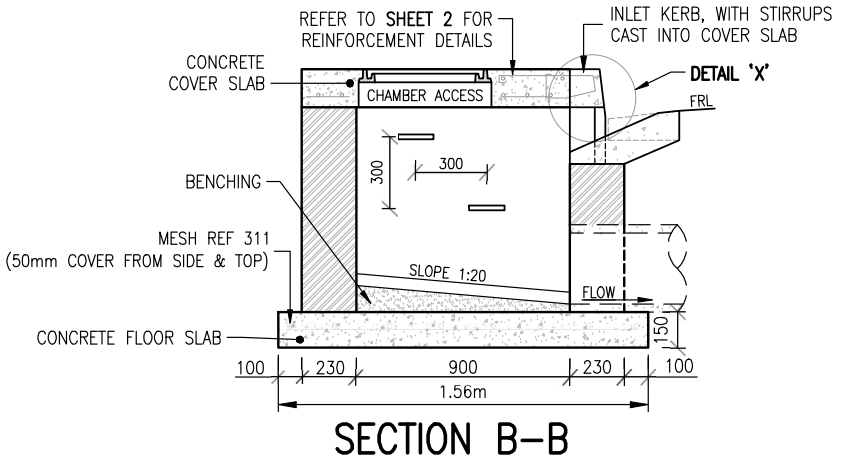

SECTION B–B

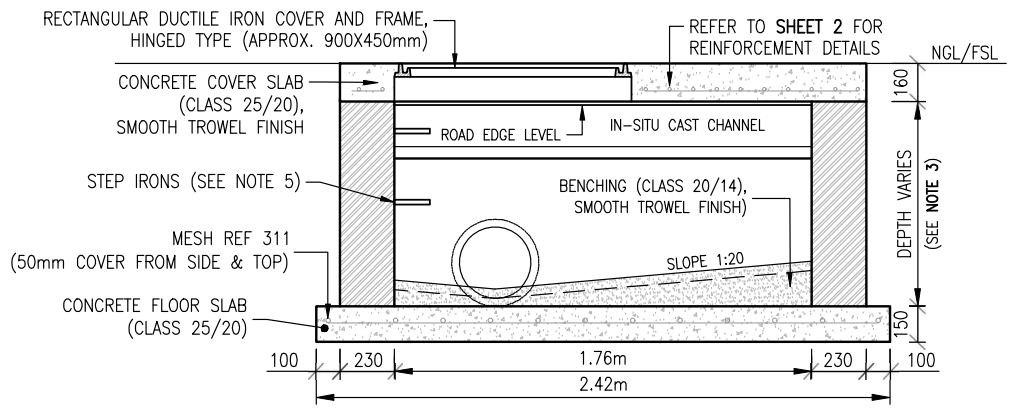

SECTION A–A

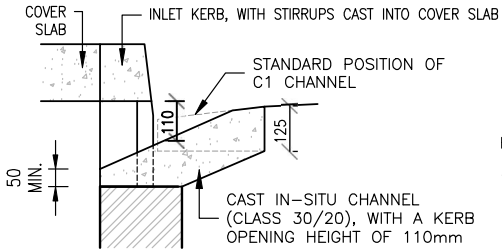

DETAIL 'X'

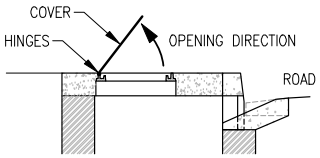

DETAIL 1:
COVER OPENING DIRECTION

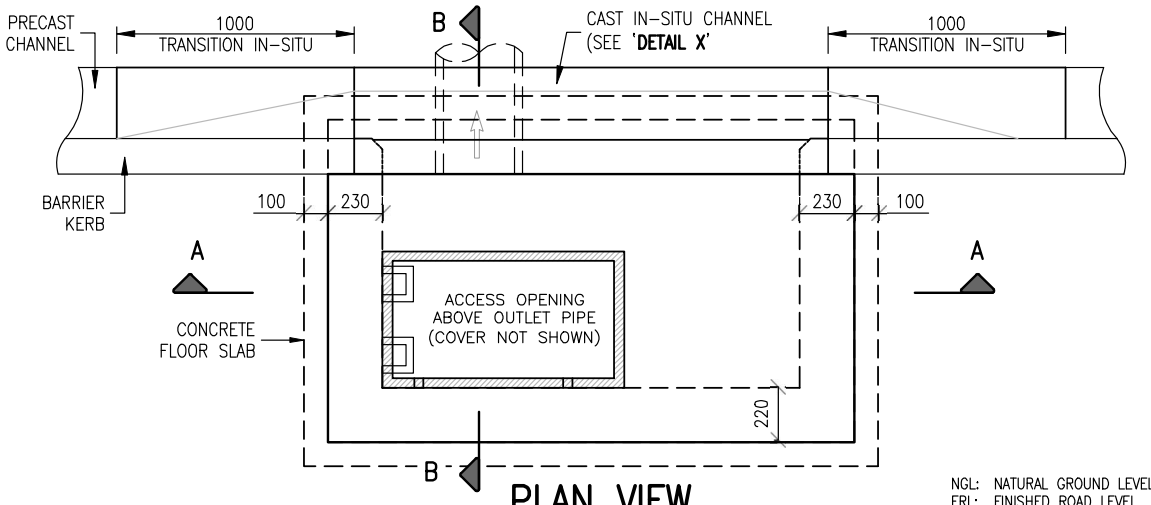

PLAN VIEW

GENERAL NOTES:

1. HINGED COVER TO OPEN AWAY FROM ROADWAY.
2. ALL INTERNAL BRICKWORK TO HAVE SMOOTH FINISH.
3. CATCHPIT DEPTH (RELATIVE TO ROAD EDGE LEVEL):
   - MINIMUM = 0.75m
   - MAXIMUM = 1.20m
4. BRICKWORK: SEE **SECTION 10.4.10** "SPECIFICATION FOR MASONRY UNITS".
5. STEP IRONS TO BE PROVIDED WHERE CATCHPIT DEPTH EXCEEDS 1m. TYPE: 150mm WIDE POLYPROPYLENE ENCAPSULATED MILD STEEL, WITH ANTI-SLIP BLOCKS ON STEPPING SURFACE.
6. COVER & FRAME TO BE CASE IN WITH COVER SLAB.

NGL: NATURAL GROUND LEVEL
FRL: FINISHED ROAD LEVEL
FSL: FINISHED SURFACE LEVEL

SHEET INDEX:

SHEET 1: CATCHPIT DETAILS
SHEET 2: REINFORCEMENT DETAILS

CITY OF CAPE TOWN
ISIXEKO SASEKAPA
STAD KAAPSTAD

CITY OF CAPE TOWN
URBAN MOBILITY

TITLE

STORMWATER CATCHPIT
TYPE C: EXTENDED KERB INLET
CATCHPIT DETAILS

STANDARDS AND GUIDELINES DETAILS

SHEET 1

SCALE	PAPER
N.T.S.	A4
DRAWING No.	REV
SW3.3A	D

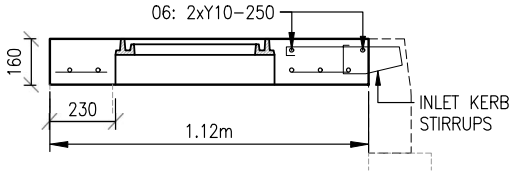

COVER SLAB: SECTION B–B

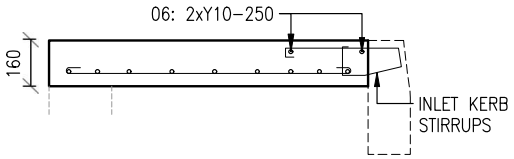

COVER SLAB: SECTION C–C

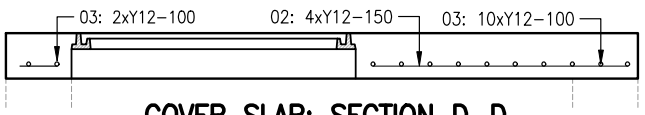

COVER SLAB: SECTION D–D

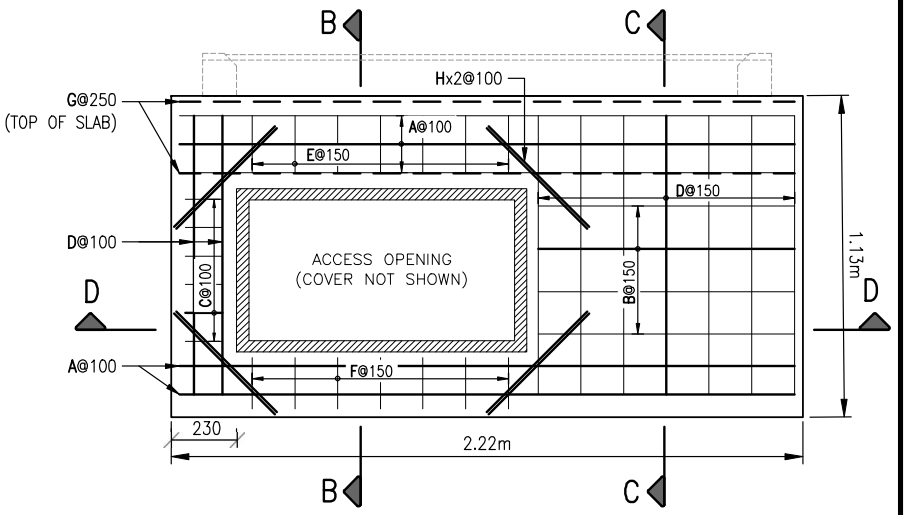

COVER SLAB: PLAN VIEW

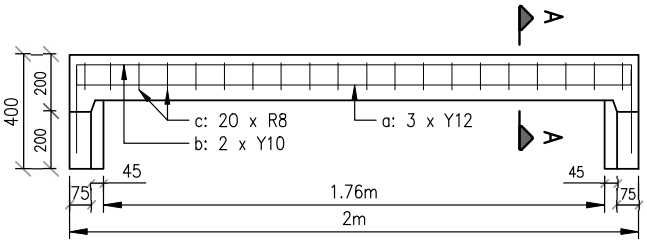

KERB: FRONT ELEVATION

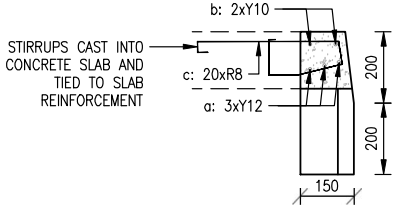

KERB: SECTION A–A

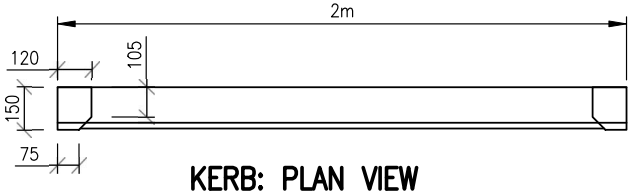

KERB: PLAN VIEW

BENDING SCHEDULE			
PRECAST INLET KERB			
BAR	No.	DIA	SKETCH
a	3	Y12	160, 1930
b	2	Y10	310, 1950
c	20	R8	10, 410, 65, 30, 130, 80, 95

BENDING SCHEDULE					
COVER SLAB					
BAR	No.	DIA	LENGTH	SKETCH	SLAB POSITION
A	5	Y12	2160		BOTTOM
B	4	Y12	900		BOTTOM
C	6	Y12	130		
D	9	Y12	980		BOTTOM
E	7	Y12	200		BOTTOM
F	7	Y12	180		BOTTOM
G	2	Y10	2160		BOTTOM
H	16	Y12	500		TOP & BOTTOM

REINFORCEMENT NOTES:

1. COVER SLAB TO BE CAST IN–SITU, WITH REINFORCEMENT TIED TO STIRRUPS OF INLET KERB.
2. MINIMUM COVER TO STEEL REINFORCEMENT SHALL BE 50mm, UNLESS INDICATED OTHERWISE.
3. STIRRUPS (BAR "c") SHALL BE CAST IN CONCRETE OF COVER SLAB.
4. BARS SHALL BE BENT IN ACCORDANCE WITH SANS 82.

SHEET INDEX:

SHEET 1: CATCHPIT DETAILS
SHEET 2: REINFORCEMENT DETAILS

CITY OF CAPE TOWN
ISIXEKO SASEKAPA
STAD KAAPSTAD

CITY OF CAPE TOWN
URBAN MOBILITY

TITLE

STORMWATER CATCHPIT
TYPE C: EXTENDED KERB INLET
REINFORCEMENT DETAILS

STANDARDS AND GUIDELINES DETAILS

SHEET 2

SCALE	PAPER
N.T.S.	A4
DRAWING No.	REV
SW3.3B	C

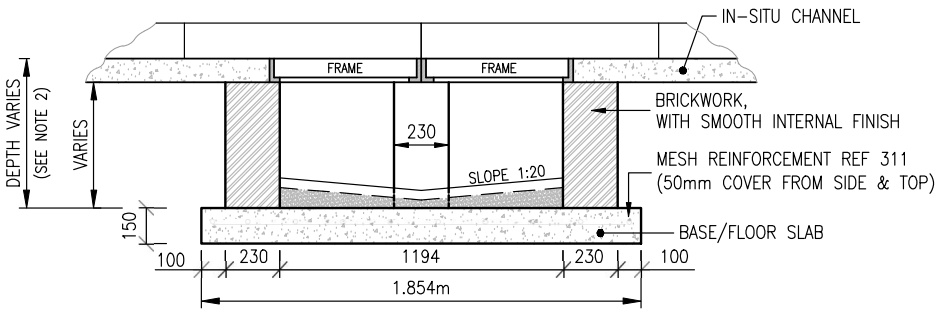

SECTION A–A

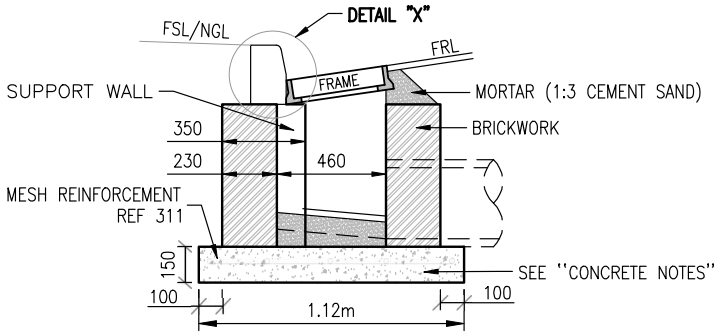

SECTION B–B

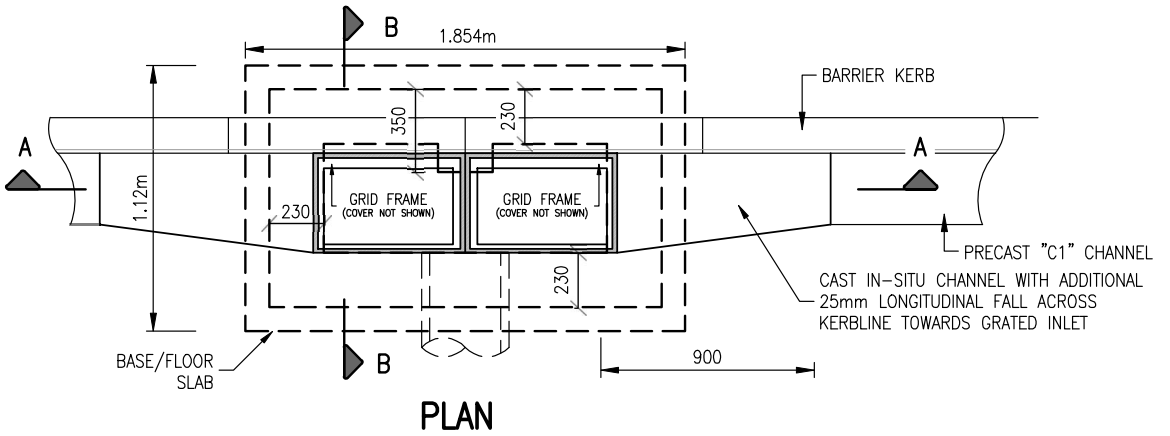

PLAN

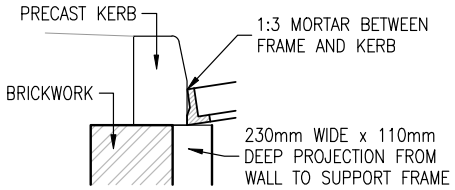

DETAIL X

NGL: NATURAL GROUND LEVEL
FRL: FINISHED ROAD LEVEL
FSL: FINISHED SURFACE LEVEL

NOTES: CONCRETE GRADES

BASE/FLOOR	25/20
BENCHING	20/14
IN-SITU CAST CHANNEL	30/20

GENERAL NOTES:

1. HINGED COVERS ARE TO OPEN TOWARDS SIDEWALK AND NOT THE ROAD.
2. CATCHPIT DEPTH:
   - MINIMUM = 0.75m
   - MAXIMUM = 1.20m
3. BRICKWORK: SEE **SECTION 10.4.10** "SPECIFICATION FOR MASONRY UNITS".
4. ALL INTERNAL BRICKWORK TO HAVE SMOOTH FINISH.

CITY OF CAPE TOWN
ISIXEKO SASEKAPA
STAD KAAPSTAD

CITY OF CAPE TOWN
URBAN MOBILITY

TITLE

STORMWATER CATCHPIT
TYPE D1: DOUBLE GRID INLET
(with Kerb & Channel)

STANDARDS AND GUIDELINES DETAILS

SCALE	PAPER
N.T.S.	A4
DRAWING No.	REV
SW3.4	C

P:\CAD\R&SD\ITI_01 Design\T_1000B Standards\T_1000RS DESIGN_Roads and Stormwater\0002 Drawings_Version4.0\03 SW\SW3.4 – Double Grid Inlet Catchpit (with kerb and channel)_RevC.dwg

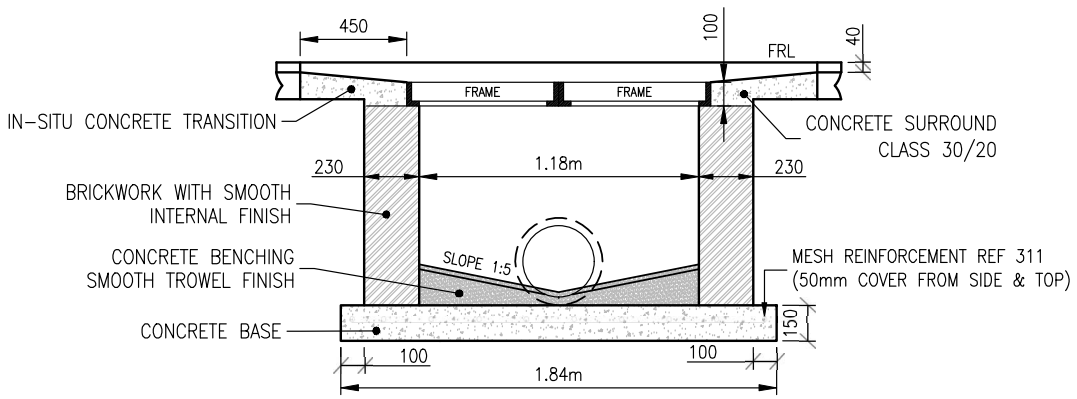

SECTION A–A

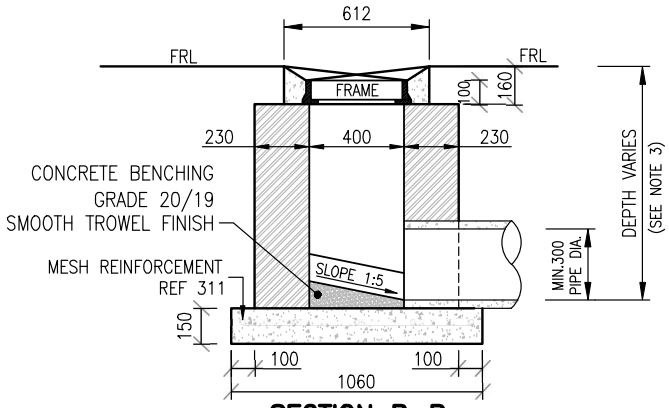

SECTION B–B

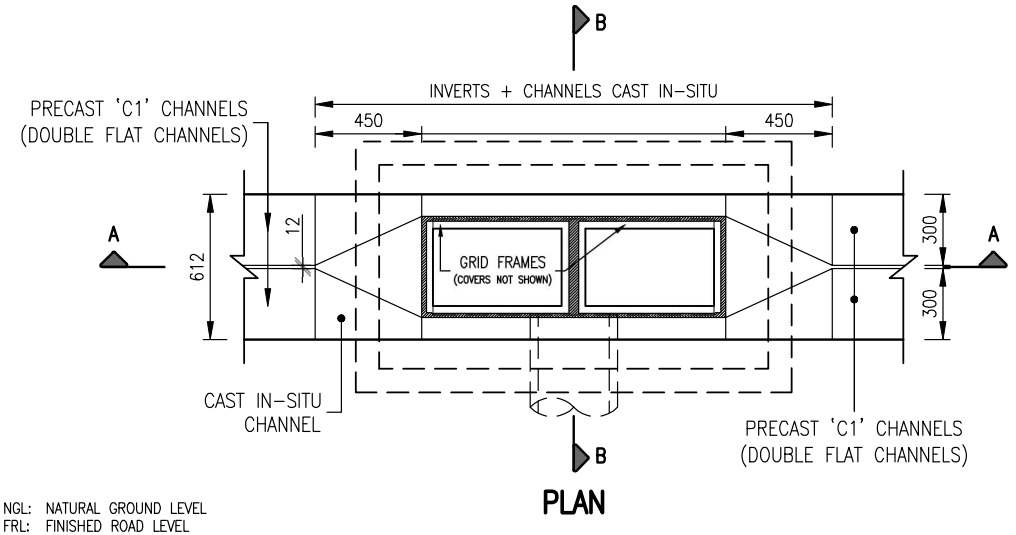

PLAN

NGL: NATURAL GROUND LEVEL
FRL: FINISHED ROAD LEVEL
FSL: FINISHED SURFACE LEVEL

NOTES: CONCRETE CLASS

BASE/FLOOR	25/20
BENCHING	20/14
IN-SITU CAST CHANNEL	30/20

GENERAL NOTES:

1. HINGED COVERS ARE TO OPEN TOWARDS SIDEWALK AND NOT THE ROAD.
2. BENCHING NOT REQUIRED IN SANDY AREAS.
3. CATCHPIT DEPTH:
   - MINIMUM = 0.75m
   - MAXIMUM = 1.20m
3. BRICKWORK: SEE SECTION 10.4.10 "SPECIFICATION FOR MASONRY UNITS".
4. ALL INTERNAL BRICKWORK TO HAVE SMOOTH FINISH.

CITY OF CAPE TOWN
ISIXEKO SASEKAPA
STAD KAAPSTAD

CITY OF CAPE TOWN
URBAN MOBILITY

TITLE

STORMWATER CATCHPIT
TYPE D2: DOUBLE GRID INLET
(with double flat channel)

STANDARDS AND GUIDELINES DETAILS

SCALE	PAPER
N.T.S.	A4
DRAWING No.	REV
SW3.5	C

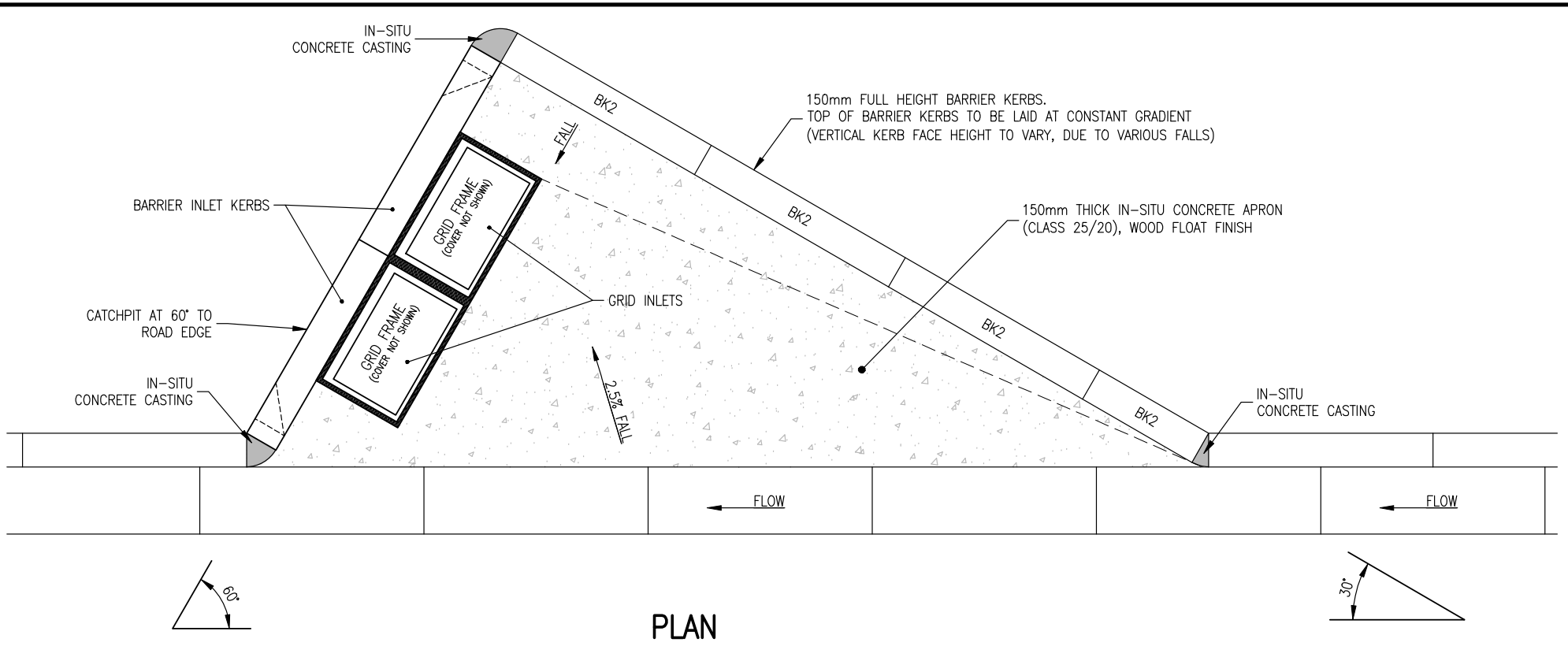

PLAN

NOTES:

1. CATCHPIT BASED ON "TYPE B: DOUBLE KERB & GRID INLET COMBINATION CATCHPIT". REFER TO **DRAWING SW3.1**
2. CATCHPIT TO BE USED ON ROADS WITH GRADIENTS GREATER THAN 8%, WHERE SUFFICIENT SPACE IS AVAILABLE ON THE ROAD VERGE.
3. REFER TO **DRAWING SW4** FOR INLET KERB DETAILS.

NOTES: CONCRETE GRADES

BASE/FLOOR	25/20
BENCHING	20/14
IN–SITU APRON	25/20

CITY OF CAPE TOWN
ISIXEKO SASEKAPA
STAD KAAPSTAD

CITY OF CAPE TOWN
URBAN MOBILITY

TITLE

STORMWATER CATCHPIT
TYPE E: STEEP SLOPES
(EXAMPLE)

STANDARDS AND GUIDELINES DETAILS

SCALE	PAPER
1:25	A4
DRAWING No.	REV
SW3.6	B

P:\CAD\R&SD\ITI_01 Design\T_1000B Standards\T_1000RS DESIGN_Roads and Stormwater\0002 Drawings_Version4.0\03 SW\SW3.6 – Catchpit on Steep Slopes_RevB.dwg

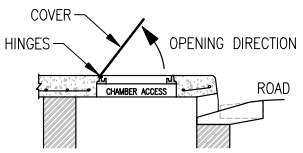

DETAIL 1:
COVER OPENING DIRECTION

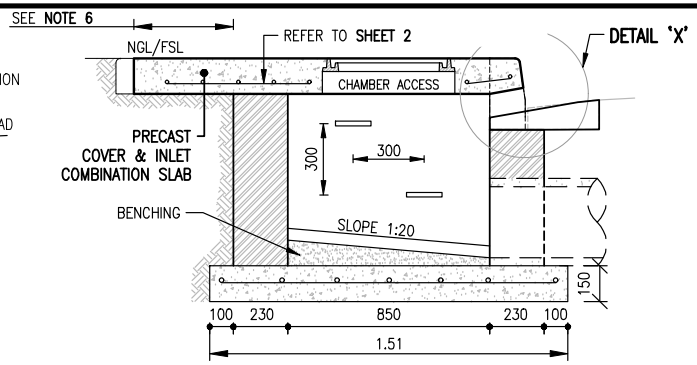

SECTION B–B

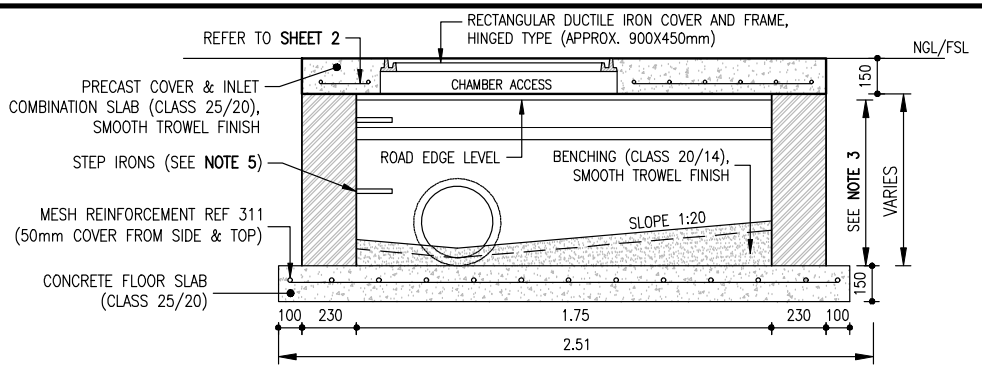

SECTION A–A

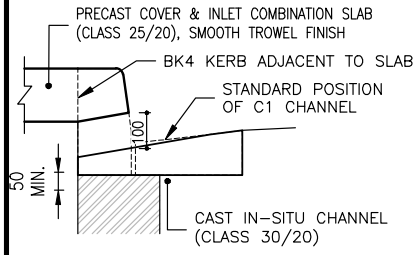

TYPE 1
(BK4 TIE–IN)

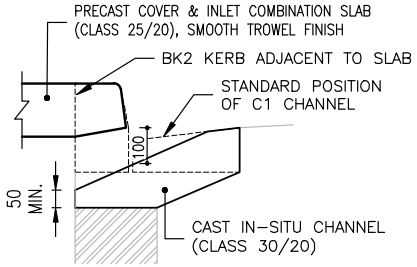

TYPE 2
(BK2 TIE–IN)

DETAIL X

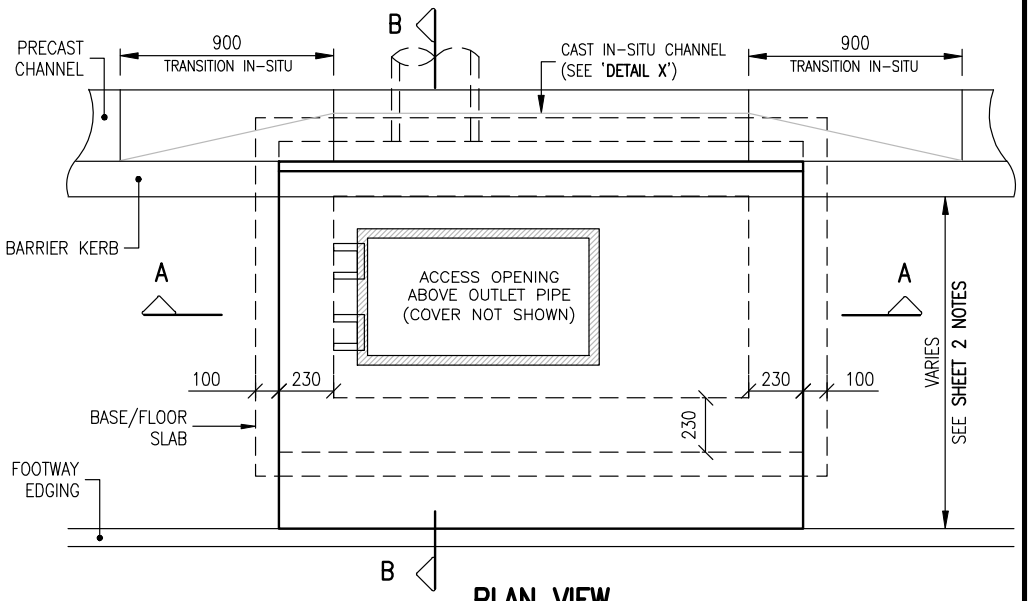

PLAN VIEW

GENERAL NOTES

1. HINGED COVER TO OPEN AWAY FROM ROADWAY. SEE **DETAIL 1**.
2. ALL INTERNAL BRICKWORK TO HAVE SMOOTH FINISH.
3. CATCHPIT DEPTH (RELATIVE TO ROAD EDGE LEVEL): MIN. = 0.75m | MAX. = 1.20m
4. BRICKWORK: SEE SECTION **10.4.10** "SPECIFICATION FOR MASONRY UNITS".
5. STEP IRONS TO BE PROVIDED WHERE CATCHPIT DEPTH EXCEEDS 1m. TYPE: 150mm WIDE POLYPROPYLENE ENCAPSULATED MILD STEEL, WITH ANTI–SLIP BLOCKS ON STEPPING SURFACE.
6. REFER TO NOTE 4 ON SHEET 2 REGARDING WIDTH OF THE COVER SLAB.

NOTES: CONCRETE CLASS

CONCRETE SLABS	25/20
BENCHING	20/14
IN–SITU CHANNEL	30/20

NGL: NATURAL GROUND LEVEL
FSL: FINISHED SURFACE LEVEL

SHEET INDEX:

SHEET 1: CATCHPIT DETAILS
SHEET 2: COVER SLAB AND REINFORCEMENT DETAILS

CITY OF CAPE TOWN
ISIXEKO SASEKAPA
STAD KAAPSTAD

CITY OF CAPE TOWN
URBAN MOBILITY

TITLE

STORMWATER CATCHPIT
TYPE F: WITH PRECAST COVER-INLET COMBINATION SLAB
CATCHPIT DETAILS

STANDARDS AND GUIDELINES DETAILS

SHEET 1

SCALE	PAPER
N.T.S.	A4
DRAWING No.	REV
SW3.7A	A

P:\CAD\R&SD\ITI_01 Design\T_1000B Standards\T_1000RS DESIGN_Roads and Stormwater\0002 Drawings_Version4.0\03 SW\SW3.7A – Catchpit with Cover–Inlet Combination Slab_RevA.dwg

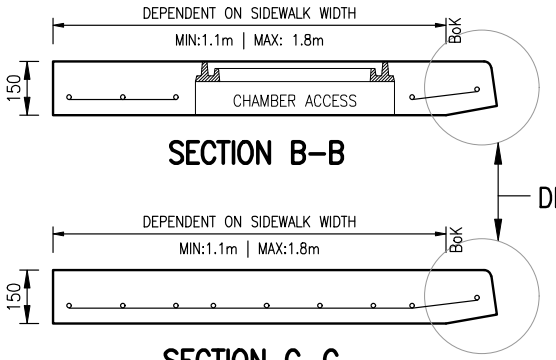

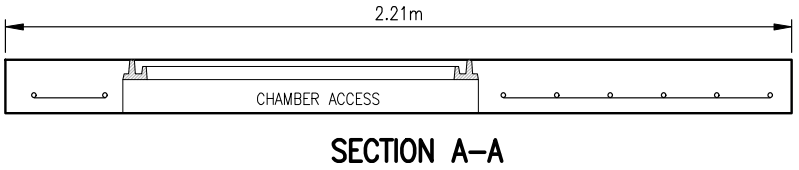

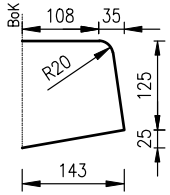

DETAIL Y:
SLAB FRONT FACE

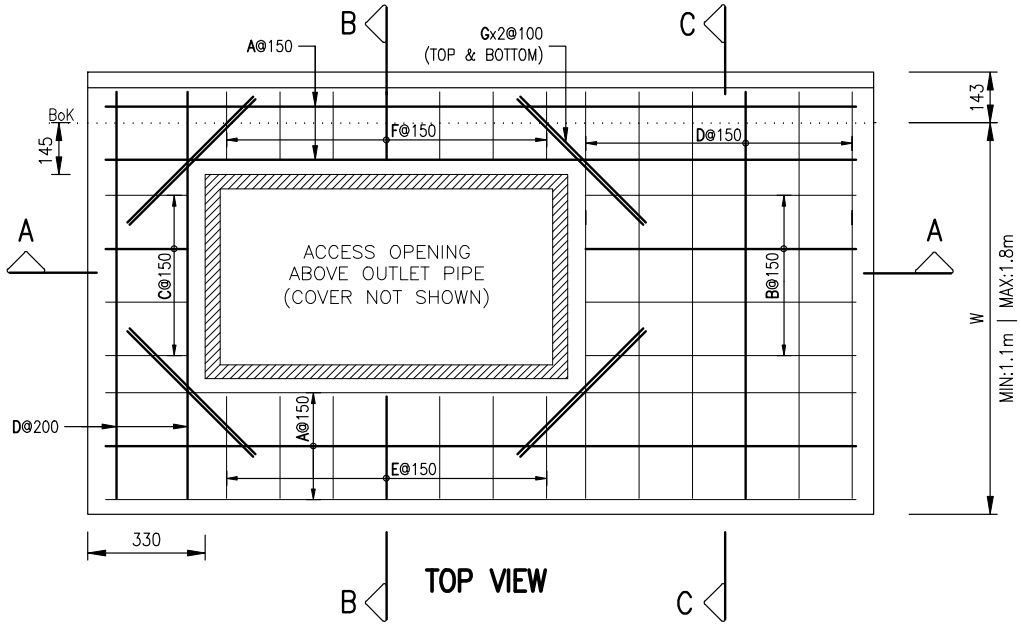

BENDING SCHEDULE						
ITEM	BAR	No.	DIA	LENGTH	SKETCH	SLAB POSITION
COVER SLAB	A	MIN:5 MAX:9	Y12	2110		BOTTOM
	B	4	Y12	760		BOTTOM
	C	4	Y12	230		BOTTOM
	D	8	Y12	MIN: 1100 MAX: 1800		BOTTOM
	E	7	Y12	MIN: 280 MAX: 980		BOTTOM
	F	7	Y12	190		BOTTOM
	G	16	Y12	500		TOP & BOTTOM

GENERAL NOTES

1. COVER SLAB SHALL BE CONCRETE CLASS 25/20.
2. THE COVER SLAB SHALL BE PRECAST, WITH THE COVER AND FRAME TO BE CAST WITH SLAB.
3. MINIMUM COVER FOR STEEL REINFORCEMENT SHALL BE 50mm, UNLESS INDICATED OTHERWISE.
4. THE WIDTH (W) OF THE SLAB WILL DEPEND ON THE SIDEWALK SURFACING AND CLEAR WIDTH. A MINIMUM WIDTH OF 700mm IS REQUIRED BETWEEN THE BACK OF THE COVER SLAB AND THE FOOTWAY EDGING FOR THE LAYER WORKS, TO ENSURE PROPER COMPACTION. IF THE AFOREMENTIONED SPACE IS LESS THAN 700mm, THE COVER SLAB SHALL EXTEND TO THE FOOTWAY EDGING.
5. THE PROVISION OF BARS "A", "D" AND "E" WILL DEPEND ON ITEM 4 ABOVE AND SHALL BE ADJUSTED ACCORDINGLY.

BoK: BACK OF KERB
FSL: FINISHED SURFACE LEVEL
NGL: NATURAL GROUND LEVEL

SHEET INDEX:

SHEET 1: CATCHPIT DETAILS
SHEET 2: COVER SLAB AND REINFORCEMENT DETAILS

CITY OF CAPE TOWN
ISIXEKO SASEKAPA
STAD KAAPSTAD

CITY OF CAPE TOWN
URBAN MOBILITY

TITLE

STORMWATER CATCHPIT
TYPE F: WITH PRECAST COVER-INLET COMBINATION SLAB
COVER SLAB AND REINFORCEMENT DETAILS

STANDARDS AND GUIDELINES DETAILS

SHEET 2

SCALE	PAPER
N.T.S.	A4
DRAWING No.	REV
SW3.7B	A

P:\CAD\R&SD\ITI_01 Design\T_1000B Standards\T_1000RS DESIGN_Roads and Stormwater\0002 Drawings_Version4.0\03 SW\SW3.7B – Catchpit with Cover–Inlet Combination Slab_RevA.dwg

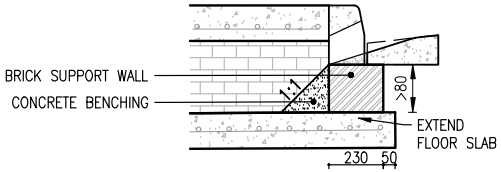

DETAIL 1

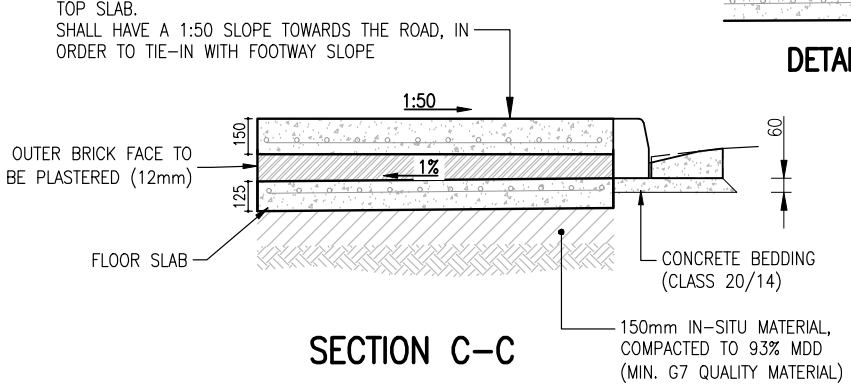

SECTION C–C

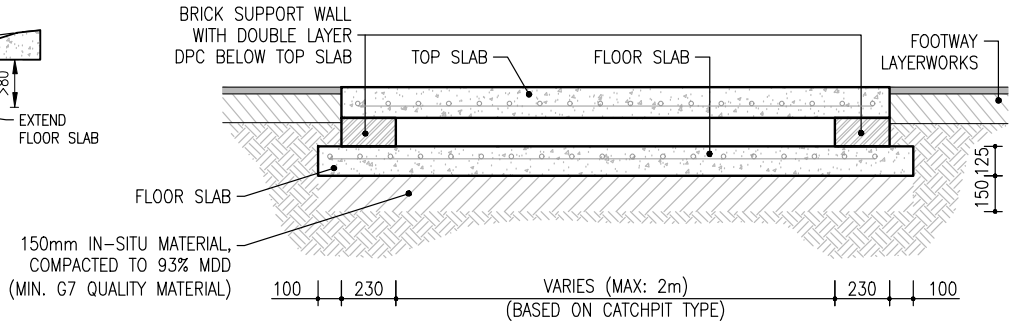

SECTION A–A

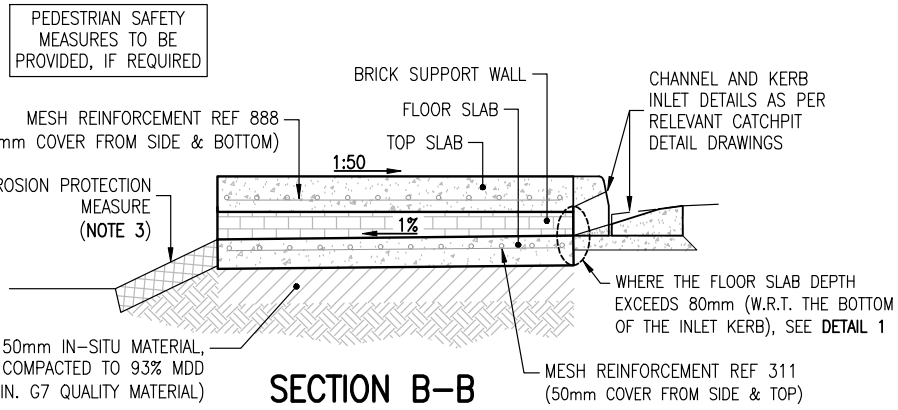

SECTION B–B

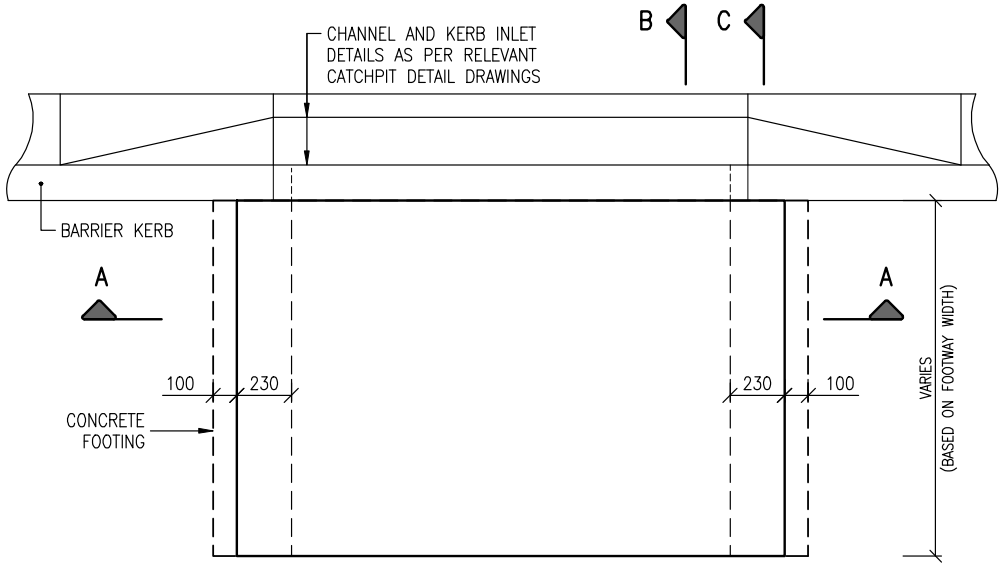

PLAN VIEW

NOTES: GENERAL

1. BRICKWORK: SEE **SECTION 10.4.10.**
2. EROSION CONTROL MEASURES: **SECTION 10.5.4.**
3. ALL EXPOSED BRICKWORK TO BE RENDERED IN 12mm PLASTER (CEMENT:SAND RATIO 1:3).

NOTES: CONCRETE CLASS

CONCRETE SLABS	25/20
BENCHING	20/14

NGL: NATURAL GROUND LEVEL
FSL: FINISHED SURFACE LEVEL

CITY OF CAPE TOWN
ISIXEKO SASEKAPA
STAD KAAPSTAD

CITY OF CAPE TOWN
URBAN MOBILITY

TITLE

STORMWATER CATCHPIT
TYPE G: SHALLOW FLOW CHAMBER

STANDARDS AND GUIDELINES DETAILS

SCALE	PAPER
N.T.S.	A4
DRAWING No.	REV
SW3.8	A

P:\CAD\R&SD\ITI_01 Design\T_1000B Standards\T_1000RS DESIGN_Roads and Stormwater\0002 Drawings_Version4.0\03 SW\SW3.8 – Catchpit with Flow Chamber_RevA.dwg

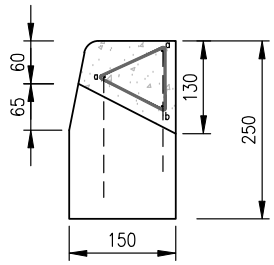

SECTION A–A

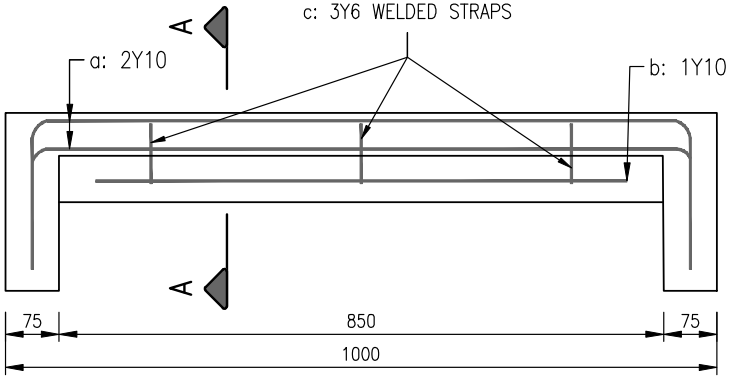

FRONT ELEVATION



BK2 KERB

BENDING SCHEDULE					
ITEM	BAR	No.	DIA	SKETCH	LENGTH
PRECAST INLET KERB	a	2	Y10	190, 925	1305
	f	1	Y10	925	925
	g	3	Y6	100, 110, 80	470

NOTES:

1. KERBS TO BE MANUFACTURED FROM CONCRETE CLASS 25/20.

CITY OF CAPE TOWN
ISIXEKO SASEKAPA
STAD KAAPSTAD

CITY OF CAPE TOWN
URBAN MOBILITY

TITLE

STANDARD PRECAST INLET KERB (1m TYPE)

STANDARDS AND GUIDELINES DETAILS

SCALE	PAPER
1:10	A4
DRAWING No.	REV
SW4	B

P:\CAD\R&SD\ITI_01 Design\T_1000B Standards\T_1000RS DESIGN_Roads and Stormwater\0002 Drawings_Version4.0\03 SW\SW4 – Precast Inlet Kerb (1m Standard)_RevB.dwg

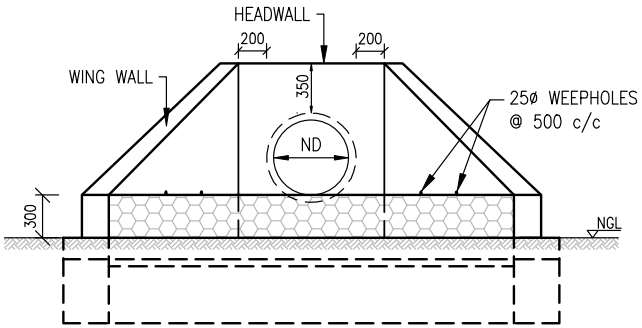

FRONT ELEVATION

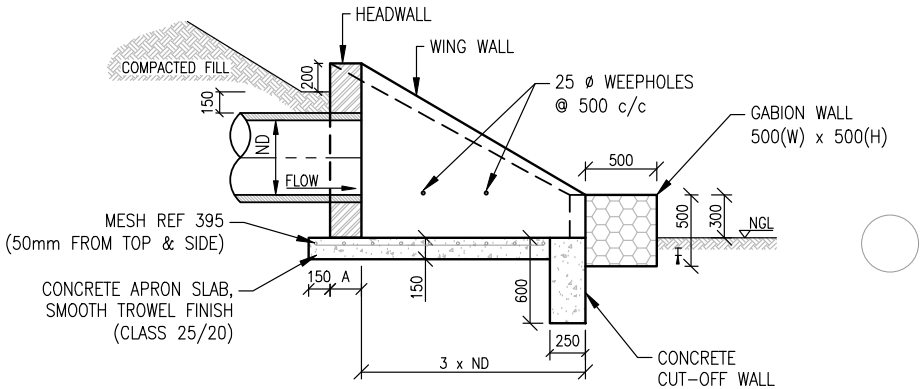

SECTION A–A

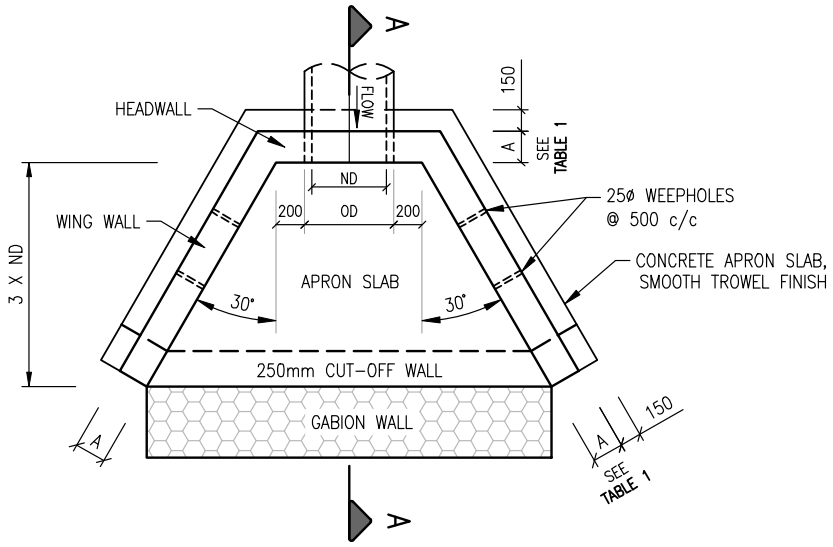

PLAN VIEW

NGL: NATURAL GROUND LEVEL
ND: NOMINAL PIPE DIAMETER
OD: OUTSIDE PIPE DIAMETER

TABLE 1
HEADWALL & WING WALL THICKNESS

NOMINAL PIPE DIAMETER (ND)	WALL THICKNESS "A"	
	BRICKWORK	CONCRETE
300 – 600	230	150
675 – 1350	350	200

NOTES:

1. ALL CONCRETE SHALL BE CLASS 25/20.
2. HEADWALL AND WING WALLS MAY BE CONSTRUCTED FROM EITHER BRICKWORK OR CONCRETE. IF CONCRETE IS CHOSEN, THE REINFORCING SHALL BE DESIGNED BY THE ENGINEERING AND SUBMITTED FOR APPROVAL.
3. BRICKWORK: SEE **SECTION 10.4.10** "SPECIFICATION FOR MASONRY UNITS".
4. ALL EXPOSED BRICKWORK TO BE RENDERED IN 12mm PLASTER (CEMENT:SAND RATIO 1:3).
5. A SPECIAL DETAIL TO BE DRAWN FOR PIPE DIAMETERS LARGER THAN 1350mm.
6. WEEP HOLES TO BE PROVIDED WHERE REQUIRED.

CITY OF CAPE TOWN
ISIXEKO SASEKAPA
STAD KAAPSTAD

CITY OF CAPE TOWN
URBAN MOBILITY

TITLE

TYPICAL INLET STRUCTURE FOR EXISTING PONDS

STANDARDS AND GUIDELINES DETAILS

SCALE	PAPER
1:50	A4
DRAWING No.	REV
SW5.1	B

P:\CAD\R&SD\ITI_01 Design\T_1000B Standards\T_1000RS DESIGN_Roads and Stormwater\0002 Drawings_Version4.0\03 SW\SW5.1 – Inlet Structure for Existing Ponds_RevC.dwg

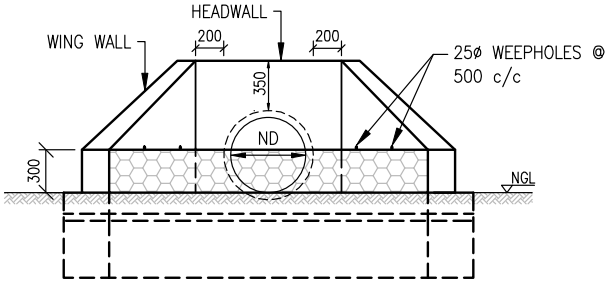

FRONT ELEVATION

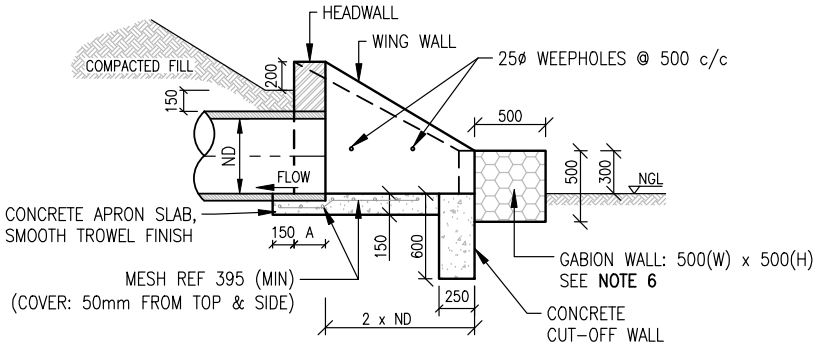

SECTION A–A

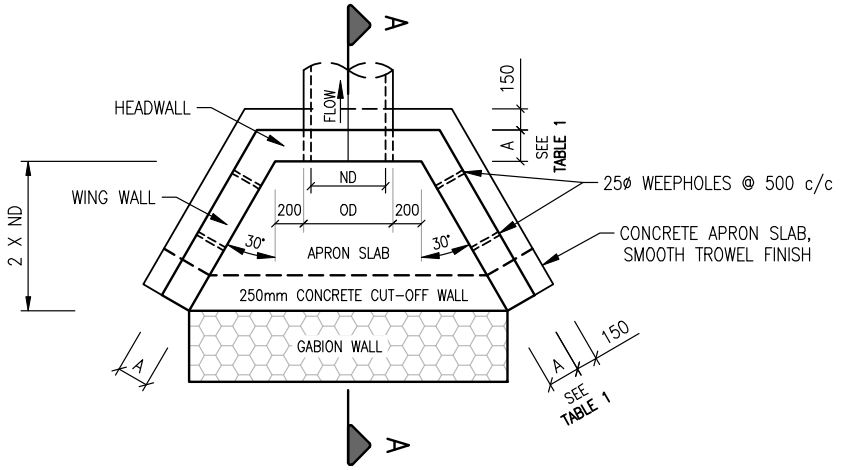

PLAN VIEW

NGL: NATURAL GROUND LEVEL
ND: NOMINAL PIPE DIAMETER
OD: OUTSIDE PIPE DIAMETER

TABLE 1
HEADWALL & WING WALL THICKNESS

NOMINAL PIPE DIAMETER (ND)	WALL THICKNESS "A"	
	BRICKWORK	CONCRETE
300 – 600	230	150
675 – 1350	350	200

NOTES:

1. ALL CONCRETE SHALL BE CLASS 25/20.
2. HEADWALL AND WING WALLS MAY BE CONSTRUCTED FROM EITHER BRICKWORK OR CONCRETE. IF CONCRETE IS CHOSEN, THE REINFORCING SHALL BE DESIGNED BY THE ENGINEERING AND SUBMITTED FOR APPROVAL.
3. BRICKWORK: SEE **SECTION 10.4.10** "SPECIFICATION FOR MASONRY UNITS".
4. ALL EXPOSED BRICKWORK TO BE RENDERED IN 12mm PLASTER (CEMENT:SAND 1:3).
5. A SPECIAL DETAIL TO BE DRAWN FOR PIPE DIAMETERS LARGER THAN 1350mm.
6. THE GABION WALL MAY BE REPLACED WITH A 300mm HIGH CONCRETE "UPSTAND", SHOULD THE SITE CONDITION REQUIRES IT. IN SUCH A SCENARIO, THE CUT-OFF WALL CAN BE EXTENDED VERTICALLY TO A HEIGHT OF 300mm ABOVE TO APRON SLAB, TO ACT AS THE "UPSTAND".
7. WEEP HOLES TO BE PROVIDED WHERE REQUIRED.

CITY OF CAPE TOWN
ISIXEKO SASEKAPA
STAD KAAPSTAD

CITY OF CAPE TOWN
URBAN MOBILITY

TITLE

TYPICAL OUTLET STRUCTURE FOR EXISTING PONDS

STANDARDS AND GUIDELINES DETAILS

SCALE	PAPER
1:50	A4
DRAWING No.	REV
SW5.2	C

P:\CAD\R&SD\ITI_01 Design\T_1000B Standards\T_1000RS DESIGN_Roads and Stormwater\0002 Drawings_Version4.0\03 SW\SW5.2 – Outlet Structure for Existing Ponds_RevC.dwg

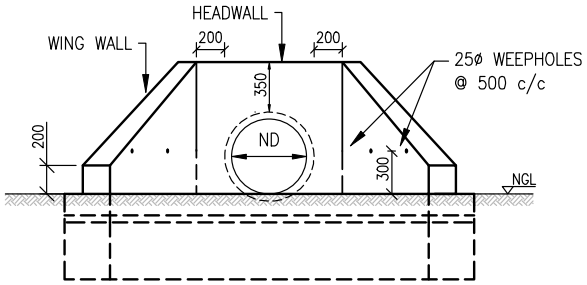

FRONT ELEVATION

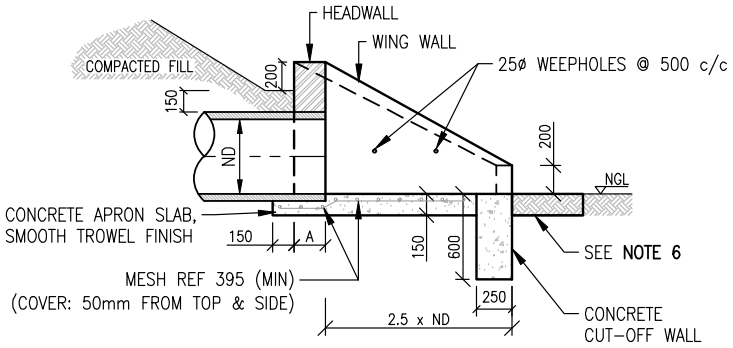

SECTION A–A

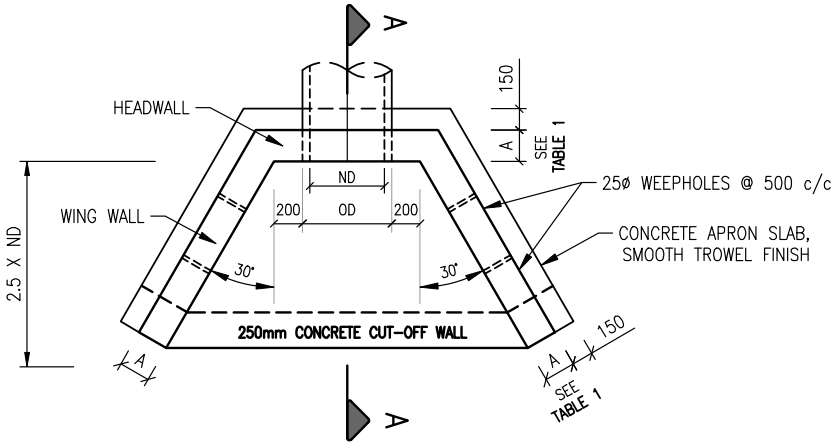

PLAN VIEW

TABLE 1
HEADWALL & WING WALL THICKNESS

NOMINAL PIPE DIAMETER (ND)	WALL THICKNESS 'A'	
	BRICKWORK	CONCRETE
300 – 600	230	150
675 – 1350	350	200

NOTES:

1. ALL CONCRETE SHALL BE CLASS 25/20.
2. HEADWALL AND WING WALLS TO BE CONSTRUCTED FROM EITHER BRICKWORK OR CONCRETE. IF CONCRETE IS CHOSEN, THE REINFORCING SHALL BE DESIGNED BY THE ENGINEERING AND SUBMITTED FOR APPROVAL.
3. BRICKWORK: SEE **SECTION 10.4.10** "SPECIFICATION FOR MASONRY UNITS".
4. ALL EXPOSED BRICKWORK TO BE RENDERED IN 12mm PLASTER (CEMENT:SAND RATIO 1:3).
5. A SPECIAL DETAIL TO BE DRAWN FOR PIPE DIAMETERS LARGER THAN 1350mm.
6. STONE PITCHING OR RENO–MATTRESS MAY BE PROVIDED AT CERTAIN OUTLET STRUCTURES, IF REQUIRED BY THE APPROVAL AUTHORITY.
7. WEEP HOLES TO BE PROVIDED WHERE REQUIRED.

NGL: NATURAL GROUND LEVEL
ND: NOMINAL PIPE DIAMETER
OD: OUTSIDE PIPE DIAMETER

CITY OF CAPE TOWN
ISIXEKO SASEKAPA
STAD KAAPSTAD

CITY OF CAPE TOWN
URBAN MOBILITY

TITLE

ORDINARY INLET/OUTLET STRUCTURE

STANDARDS AND GUIDELINES DETAILS

SCALE	PAPER
1:50	A4
DRAWING No.	REV
SW5.3	C

P:\CAD\R&SD\ITI_01 Design\T_1000B Standards\T_1000RS DESIGN_Roads and Stormwater\0002 Drawings_Version4.0\03 SW\SW5.3 – Normal Inlet_Outlet Structure_RevC.dwg

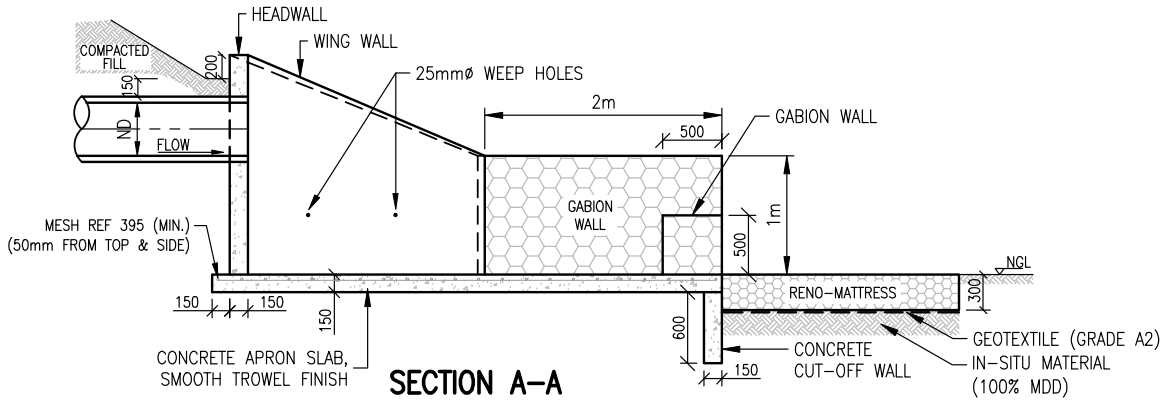

SECTION A–A

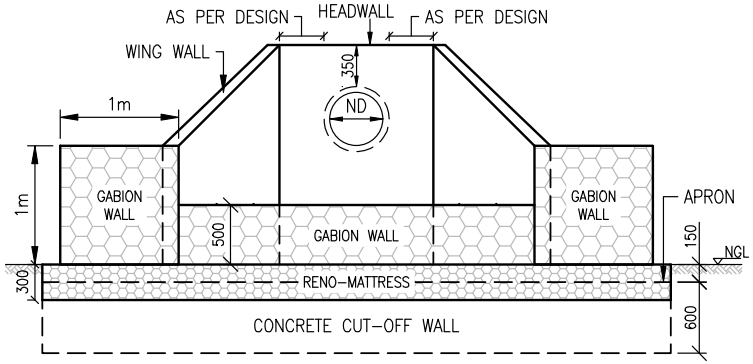

FRONT ELEVATION

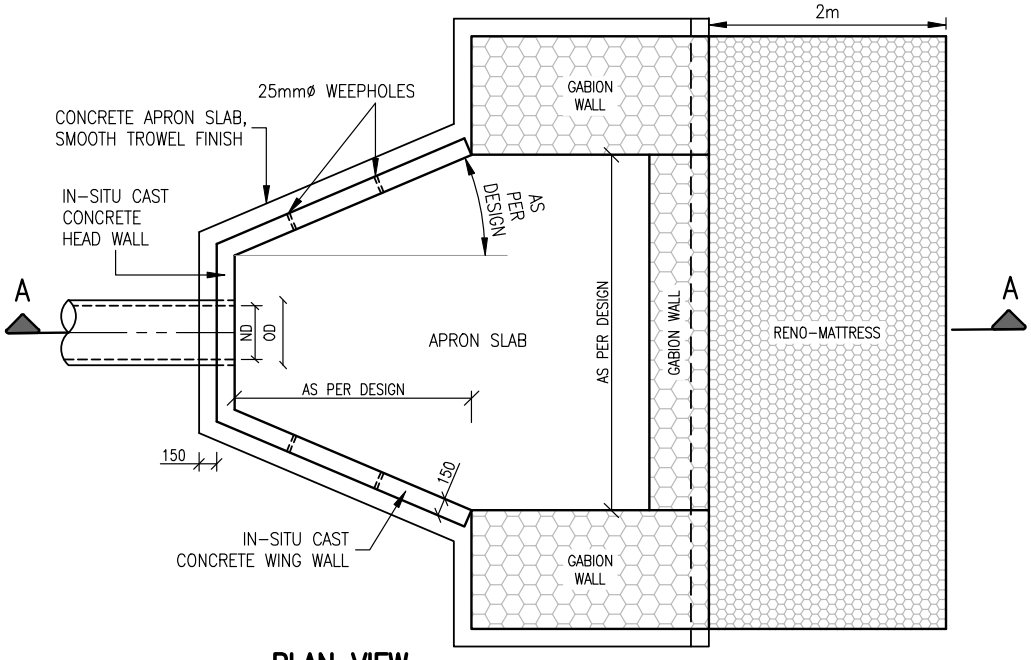

PLAN VIEW

NOTES:

1. THE DETAILS IN THIS DRAWING ARE GIVEN AS AN EXAMPLE. ALL FINAL DIMENSIONS AND DETAILS TO BE AS PER SPECIALIST DESIGN.
2. ALL CONCRETE SHALL BE CLASS 25/20.
3. MORTAR SHALL HAVE A CEMENT:SAND RATIO OF 1:3
4. ALL EXPOSED CORNERS TO BE CHAMFERED.
5. CONCRETE REINFORCEMENT TO BE AS PER SPECIALIST DESIGN.
6. WEEP HOLES TO BE PROVIDED WHERE REQUIRED.

NGL: NATURAL GROUND LEVEL
ND: NOMINAL PIPE DIAMETER
OD: OUTSIDE PIPE DIAMETER

CITY OF CAPE TOWN
ISIXEKO SASEKAPA
STAD KAAPSTAD

CITY OF CAPE TOWN
URBAN MOBILITY

TITLE

EXAMPLE OF A POND INLET STRUCTURE WITH SEDIMENT TRAP

STANDARDS AND GUIDELINES DETAILS

SCALE	PAPER
N.T.S.	A4
DRAWING No.	REV
SW5.4	B

P:\CAD\R&SD\ITI_01 Design\T_1000B Standards\T_1000RS DESIGN_Roads and Stormwater\0002 Drawings_Version4.0\03 SW\SW5.4 – Pond Inlet Structure with Sediment Trap (Example)_RevB.dwg

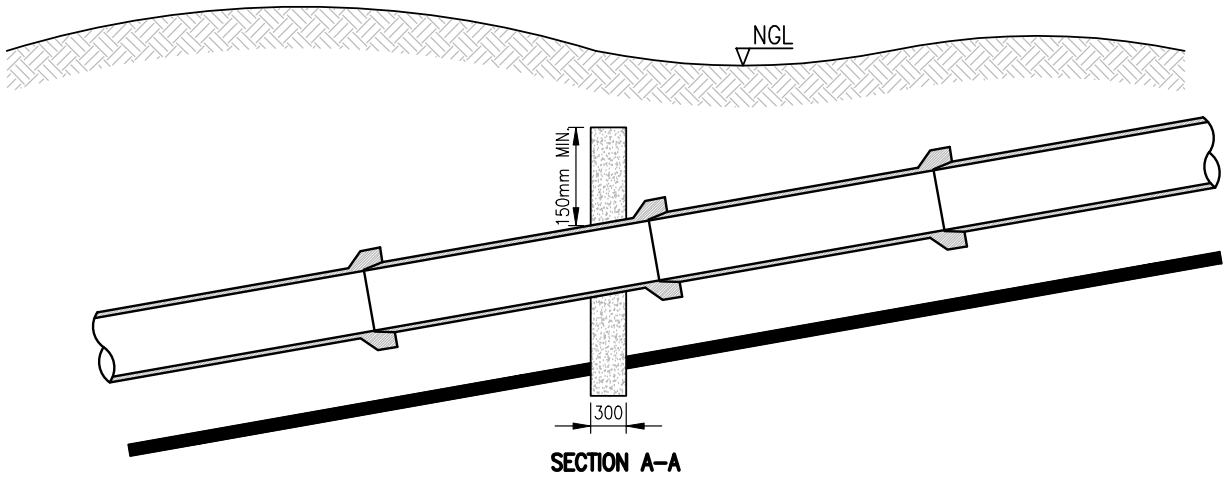

SECTION A–A

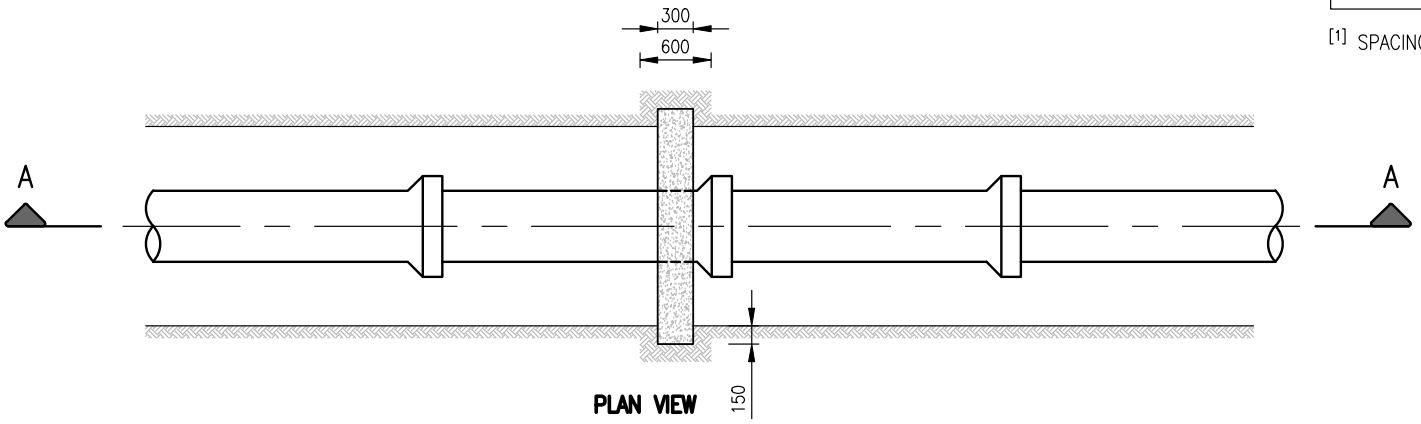

PLAN VIEW

GRADE (%)	SPACING FOR 2.44 PIPE LENGTHS [1]
OVER 50%	EVERY JOINT
30% TO 50%	ALTERNATE JOINT
20% TO 30%	EVERY FOURTH JOINT
10% TO 20%	EVERY EIGHTH JOINT

[1] SPACING FOR INTERMEDIATE GRADES CAN BE INTERPOLATED.

NOTES:

1. ANCHOR BLOCKS SHALL BE CONCRETE CLASS 20/20.
2. ANCHOR BLOCKS TO BE KEYED INTO UNDISTURBED GROUND.

NGL: NATURAL GROUND LEVEL
FRL: FINISHED ROAD LEVEL
FSL: FINISHED SURFACE LEVEL

CITY OF CAPE TOWN
ISIXEKO SASEKAPA
STAD KAAPSTAD

CITY OF CAPE TOWN
URBAN MOBILITY

TITLE

ANCHOR BLOCKS FOR STORMWATER PIPES ON STEEP SLOPES

STANDARDS AND GUIDELINES DETAILS

SCALE	PAPER
N.T.S.	A4
DRAWING No.	REV
SW6	B

P:\CAD\R&SD\ITI_01 Design\T_1000B Standards\T_1000RS DESIGN_Roads and Stormwater\0002 Drawings_Version4.0\03 SW\SW6 – Anchor Blocks for Stormwater Pipes on Steep Slopes_RevB.dwg

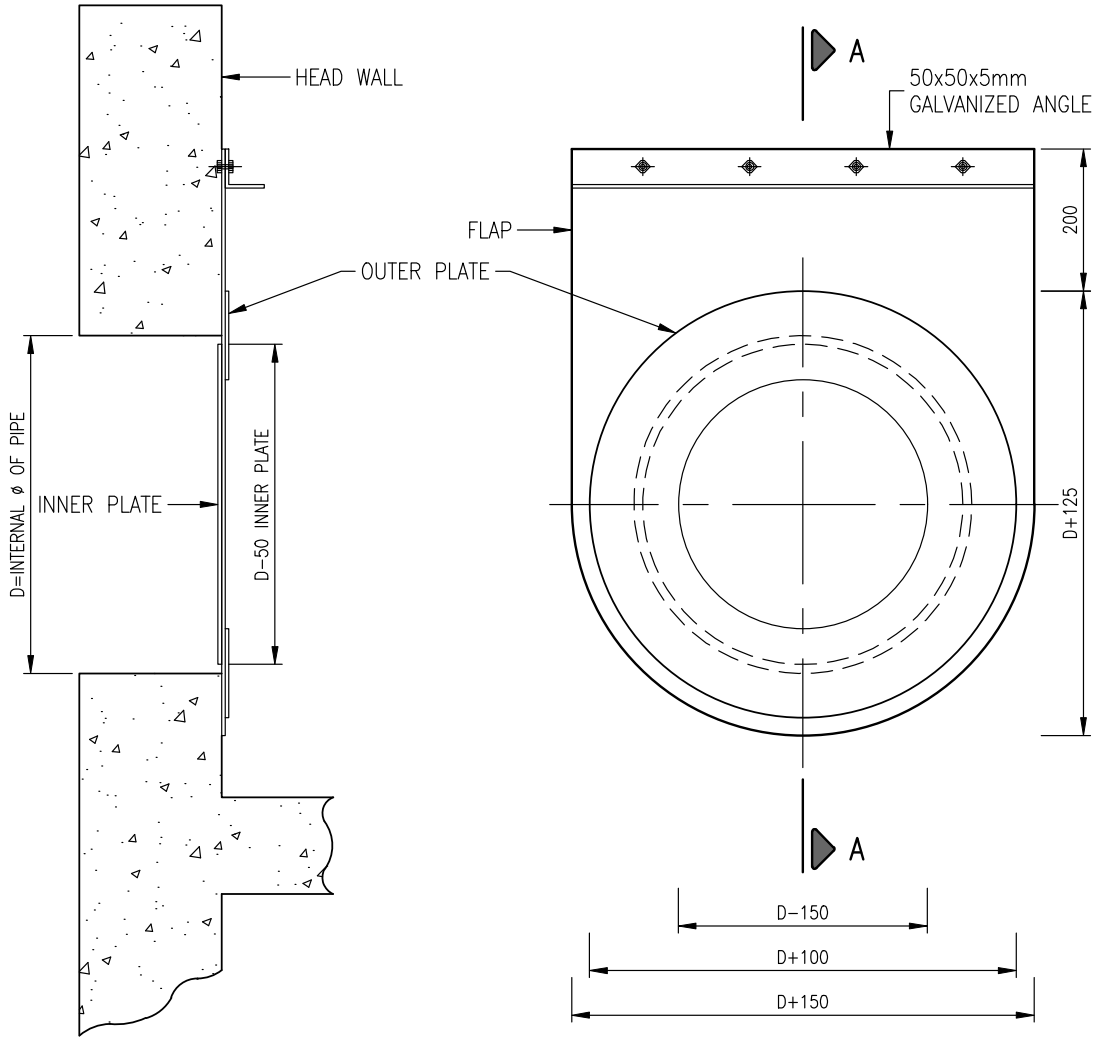

SECTION A-A

FONT ELEVATION

NOTES:

1. D = INTERNAL DIAMETER OF STORMWATER PIPE.
2. PLATES TO BE GALVANIZED 6mm PLATE.
3. OUTER PLATE: O.D. = D+100mm
   I.D. = D-150mm
4. INNER PLATE: O.D. = D-150mm
5. FLAP MATERIAL TO BE 4PLY CANVASS REINFORCED RUBBERISED SHEET "CONVEYER BELTING"
6. INNER AND OUTER PLATES TO BE BOLTED TOGETHER OVER BELTING WITH GALVANIZED 6mm ø BOLTS AT APPROX. 150mm SPACING.
7. 50x50x5mm GALVANIZED ANGLE TO BE BOLTED TO HEAD WALL WITH 8mm GALVANIZED PROJECTING OR STUD TYPE ANCHORS AT APPROX. 200mm CENTERS.

CITY OF CAPE TOWN
ISIXEKO SASEKAPA
STAD KAAPSTAD

CITY OF CAPE TOWN
URBAN MOBILITY

TITLE

LIGHT DUTY STORMWATER NON-RETURN FLAP

STANDARDS AND GUIDELINES DETAILS

SCALE	PAPER
1:10	A4
DRAWING No.	REV
SW7	A

P:\CAD\R&SD\TT_01 Design\T_1000B Standards\T_1000RS DESIGN_Roads and Stormwater\0002 Drawings_Version4.0\03 SW\SW7 - Light Duty Stormwater Non-Return Flap_RevA.dwg

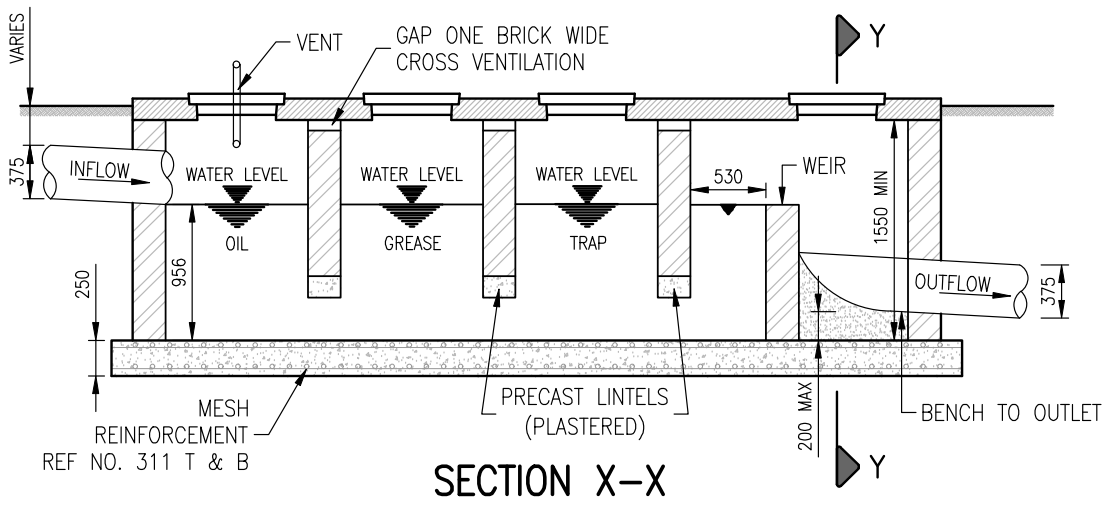

SECTION X–X

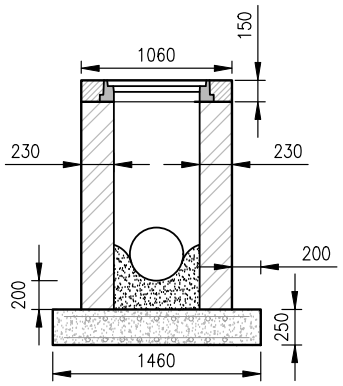

SECTION Y–Y

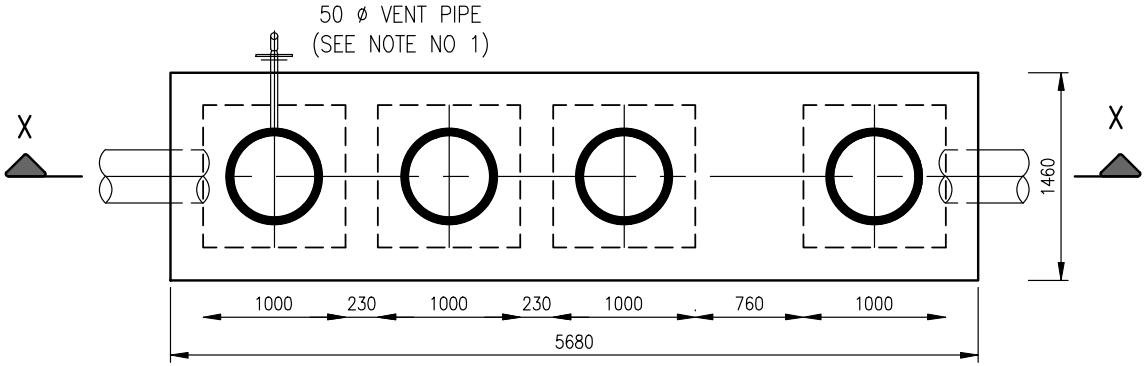

PLAN

NOTES:

1. THE DETAILS ON THIS DRAWING ILLUSTRATES A TYPICAL EXAMPLE OF AN OIL/FUEL SEPARATOR SYSTEM. DESIGNERS MAY PROPOSE AN ALTERNATIVE DESIGN, PROVIDED THAT THE DESIGN CONFORMS TO THE SPECIFICATIONS OF SANS 50858–1 AND 50858–2 AND MEETS THE REQUIREMENTS OF THE RELEVANT APPROVAL AUTHORITY.
2. EXTERNAL 50mm DIAMETER VENT PIPE TO DISCHARGE IN AN AREA APPROVED BY AND TO FIRE REGULATIONS OF THE LOCAL AUTHORITY.
3. ALL COMPARTMENT WALLS AND FLOORS TO BE PLASTERED IN A TWO COAT 1:2 CEMENT/SAND MORTAR FINISH WITH A WOOD FLOAT AND HAVING COMPLETE OVERAGE OF 12mm THICKNESS.
4. MANHOLE COVER AND FRAME TYPE TO BE AS PER APPROVAL AUTHORITY'S REQUIREMENTS.
5. BRICKWORK: SEE SECTION 10.4.10 "SPECIFICATION FOR MASONRY UNITS".
6. EXTERNAL WALLS AND PORTION WALLS TO BE DESIGNED TO SUITS LOCAL SOIL CONDITIONS. REINFORCED CONCRETE MAY BE USED AS AN ALTERNATIVE.
7. TOP SLAB TO BE IN REINFORCED CONCRETE DESIGNED TO ACCOMMODATE THE LOCAL CONDITIONS.

CITY OF CAPE TOWN
ISIXEKO SASEKAPA
STAD KAAPSTAD

CITY OF CAPE TOWN
URBAN MOBILITY

TITLE

TYPICAL EXAMPLE OF OIL/FUEL SEPARATOR SYSTEM

STANDARDS AND GUIDELINES DETAILS

SCALE	PAPER
1:50	A4
DRAWING No.	REV
SW8	A

P:\CAD\R&SD\ITI_01 Design\T_1000B Standards\T_1000RS DESIGN_Roads and Stormwater\0002 Drawings_Version4.0\03 SW\SW8 – Oil–Petrol Separator System_RevA.dwg

LIMITING GRADES

INTERNAL DIAMETER	STORMWATER PIPES (CONCRETE) Velocity: 0.91m/sec				FOUL SEWER PIPES (UPVC) Velocity: 0,71m/sec		
	GRADE	GRADE (%)	CAPACITY IN l/s PIPE FLOWING FULL		GRADE	% GRADE	CAPACITY IN l/S PIPE FLOWING FULL
150	-	-	-		1:178	0,561	12,90
225	-	-	-		1:305	0,327	29,10
300	1:270	0,370	66,7		1:445	0,224	51,85
375	1:363	0,275	104,2		1:600	0,166	81,20
450	1:460	0.217	150,5		1:760	0,131	117,00
525	1:570	0,147	204,5		1:940	0,106	159,40
600	1:680	0,126	266,9		1:1084	0,092	208,00
675	1:790	0,109	338,9		1:1284	0,077	262,10
750	1:910	0,95	417,0		1:1500	0,066	325,10
825	1:1050	0,95	518,0		1:1775	0,056	391,10
900	1:1140	0,87	602,0		1:1925	0,051	467,00
975	1:1300	0,076	705,0		1:2150	0,046	547,00
1050	1:1470	0,068	818,5		1:2350	0,042	637,00
1125	1:1530	0,065	941,0		1:2600	0,038	728,10
1200	1:1700	0,058	1073,0		1:2800	0,035	830,00
1275	1:1850	0,054	1207,0		1:3050	0,032	938,90
1350	1:2000	0,050	1350,0		1:3300	0,030	1051,00
1425	1:2150	0,046	1510,0		1:3550	0,028	1171,00
1500	1:2300	0,043	1672,0		-	-	-
1575	1:2450	0,040	1847,0		-	-	-

P:\CAD\R&SD\ITL_01 Design\T_1000B Standards\T_1000RS DESIGN_Roads and Stormwater\0002 Drawings_Version4.0\03 SW\SW9 – Crimp & Bruges_RevA.dwg

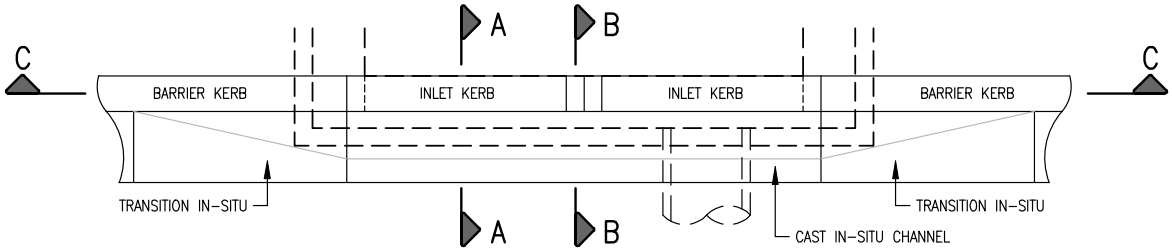

PLAN VIEW

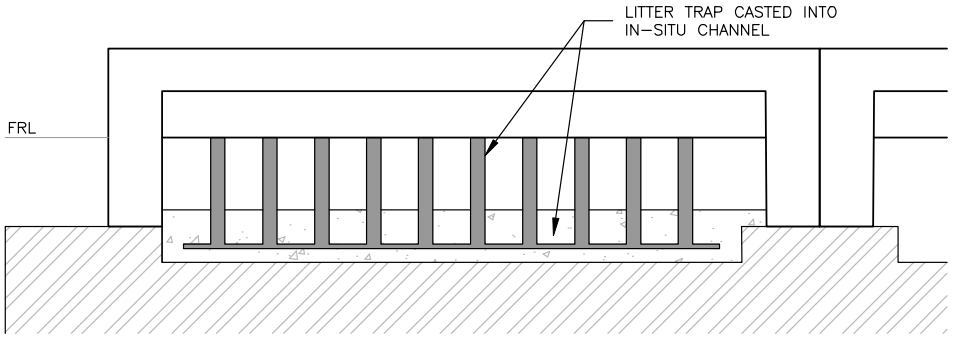

PARTIAL SECTION C-C

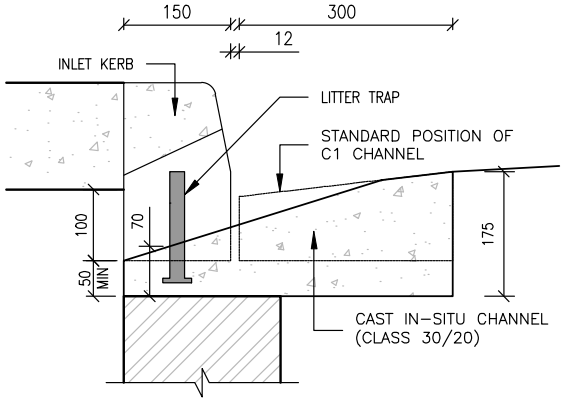

SECTION A-A

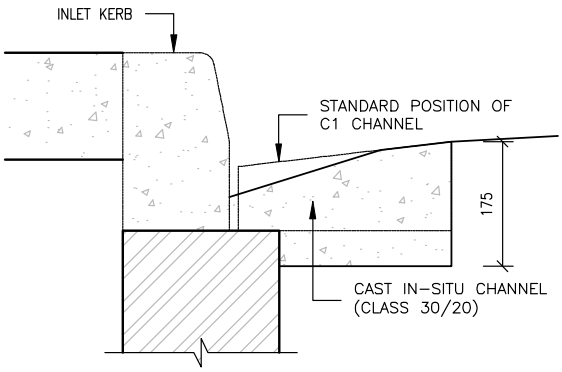

SECTION B-B

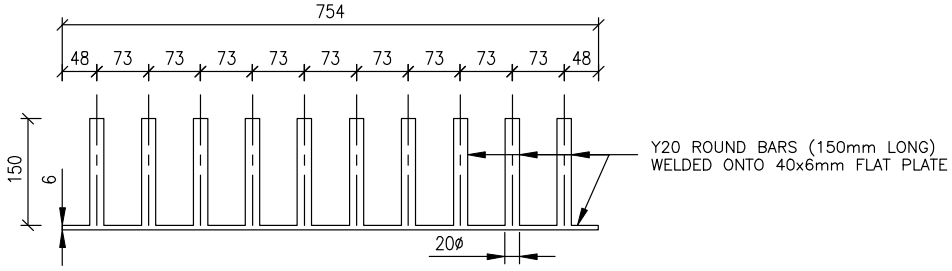

LITTER TRAP DETAIL

NOTES:

1. DETAILS ON THIS DRAWING REFERS TO THE LITTER TRAP ONLY. REFER TO DRAWINGS SERIES SW3 FOR THE DETAILS PERTAINING TO THE CONSTRUCTION OF CATCHPITS.
2. LITTER TRAPS TO BE PROVIDED AS REQUIRED BY THE APPROVAL AUTHORITY.
3. ALL LITTER TRAPS TO BE HOT DIPPED GALVANISED AND CAST INTO IN-SITU CAST CONCRETE CHANNEL, ALONG THE CENTER OF THE INLET KERB.

NGL: NATURAL GROUND LEVEL
FRL: FINISHED ROAD LEVEL
FSL: FINISHED SURFACE LEVEL

CITY OF CAPE TOWN
ISIXEKO SASEKAPA
STAD KAAPSTAD

CITY OF CAPE TOWN
URBAN MOBILITY

TITLE

LITTER TRAP
(FOR STORMWATER KERB INLET CATCHPITS)

STANDARDS AND GUIDELINES DETAILS

SCALE	PAPER
N.T.S.	A4
DRAWING No.	REV
SW10	B

P:\CAD\R&SD\TL_01 Design\T_1000B Standards\T_1000RS DESIGN_Roads and Stormwater\0002 Drawings_Version4.0\03 SW\SW10 - Litter Trap_RevB.dwg

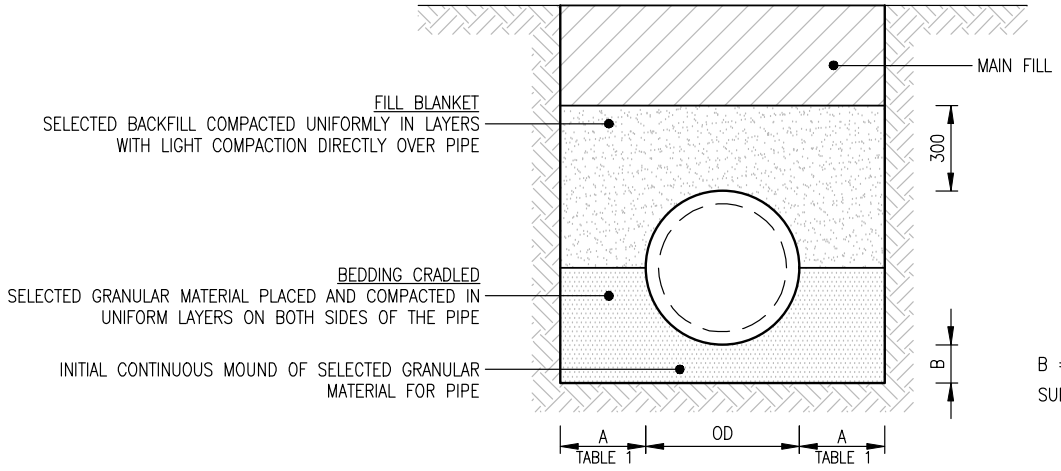

TABLE 1 SIDE ALLOWANCE FOR TRENCH EXCAVATION "A"	
PIPE OUTSIDE DIAMETER "OD" (mm)	SIDE ALLOWANCE (mm)
0 < OD ≤ 125	300
125 < OD ≤ 700	300
700 < OD ≤ 1000	400
1000 < OD ≤ 2000	500
2000 < OD	600

B = OD/4,
SUBJECT TO: 100mm < B < 200mm

BEDDING AND CONSTRUCTION DETAIL
(SOIL/NATURAL GROUND FOUNDATION)

NOTES:

1. BEDDING CRADLE:
   1.1. CRADLE TO SUPPORT THE BOTTOM HALF OF THE PIPE BARREL.
   1.2. SHALL CONSIST OF FINE GRANULAR MATERIAL (i.e. COARSE SAND OR WELL-GRADED CRUSHED STONE), OF NOMINAL SIZE NOT EXCEEDING 6.7mm AND NOT MORE THAN 10% OF WHICH SHALL PASS THROUGH A 0.15mm SIEVE.
   1.3. MATERIAL SHALL TO BE THOROUGHLY RAMMED AND TAMPED IN UNDER THE SIDES OF THE PIPE, TO PROVIDE A UNIFORM BEDDING.
2. BACKFILL BLANKET:
   2.1. THE BLANKET MATERIAL SHALL BE SAND, GRAVEL, WELL-GRADED CRUSHED STONE OR ANY OTHER APPROVED MATERIAL CONTAINING NO MORE SILT OR CLAY THAN IS NECESSARY TO PROVIDE A DENSE AND STABLE FILLING. THE MATERIAL SHALL NOT HAVE A PI EXCEEDING 6 AND SHALL BE FREE FROM VEGETATION AND LUMPS AND STONES OF DIAMETER EXCEEDING 30mm.
   2.2. THE FILL MATERIAL SHALL BE PLACED AT OPTIMUM MOISTURE CONTENT AND COMPACTED IN LAYERS NOT EXCEEDING 150mm. THE DENSITY SHALL BE AT LEAST THE DENSITY REQUIRED FOR THE MATERIAL IN ADJOINING LAYERS OF FILL, SUBGRADE AND SUBBASE. FOR BACKFILLING IN EXCAVATIONS MADE IN NATURAL GROUND, THE DENSITY SHALL BE AT LEAST 93% OF MDD.
   2.3. BACKFILLING SHALL BE CARRIED OUT SIMULTANEOUSLY AND EQUALLY ON BOTH SIDES OF THE PIPE, TO PREVENT UNEQUAL LATERAL FORCES FROM OCCURRING.
3. FOR EXCAVATIONS IN ROCK OR OTHER HARD MATERIAL, THE MATERIAL BELOW THE PIPE SHALL BE REMOVED AND REPLACED WITH A BED OF SAND (OR OTHER APPROVED GRAVEL OF SOIL) TO A DEPTH AS PRESCRIBED BY THE ENGINEER. THE MATERIAL TO BE WATERED AND COMPACTED TO PROVIDE A FIRM FOUNDATION. THEREAFTER, THE CRADLED SHALL BE PREPARED.

CITY OF CAPE TOWN
ISIXEKO SASEKAPA
STAD KAAPSTAD

CITY OF CAPE TOWN
URBAN MOBILITY

TITLE

BEDDING DETAILS FOR RIGID STORMWATER PIPES (CLASS 'B')

STANDARDS AND GUIDELINES DETAILS

SCALE	PAPER
1:25	A4
DRAWING No.	REV
SW11	B

P:\CAD\R&SD\ITI_01 Design\T_1000B Standards\T_1000RS DESIGN_Roads and Stormwater\0002 Drawings_Version4.0\03 SW\SW11 – Bedding Detail for Rigid pipes_RevB.dwg

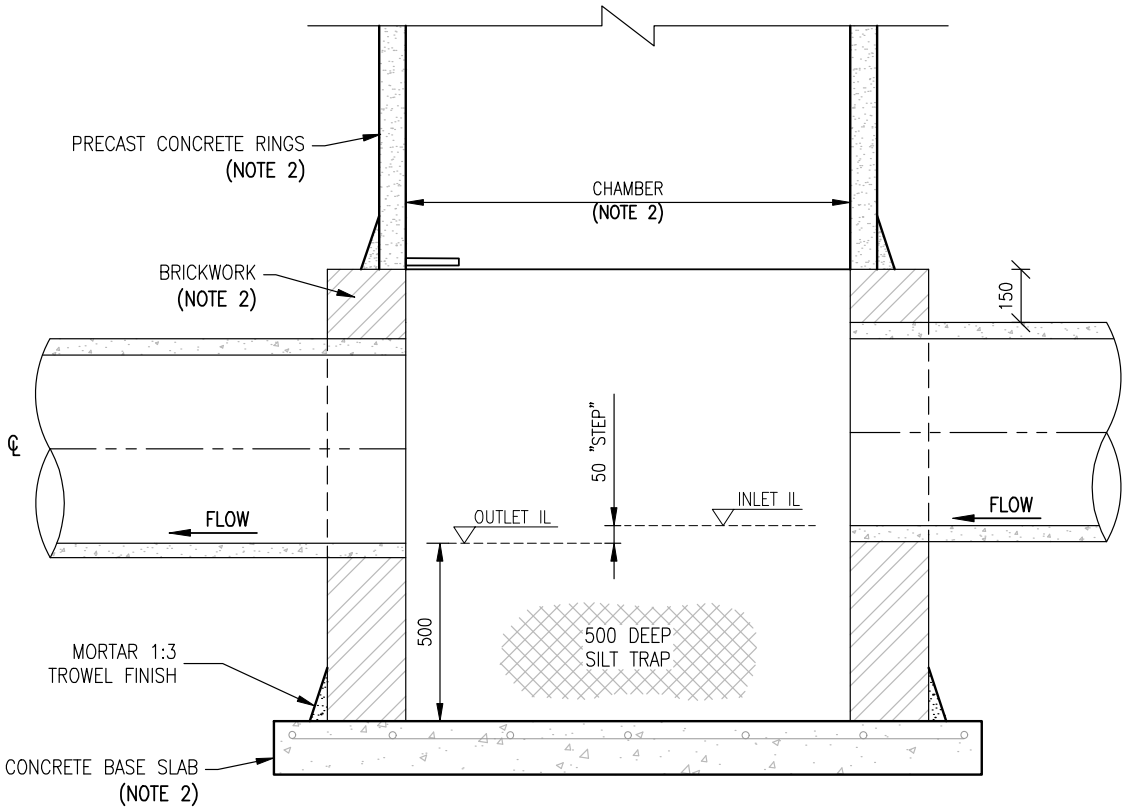

TYPICAL SECTION

NOTES:

1. THIS DRAWING SHALL BE READ IN CONJUNCTION WITH THE FOLLOWING DRAWINGS:
   - SW2.2: STORMWATER MANHOLES (SHALLOW TYPE)
   - SW2.3. STORMWATER MANHOLES (DEEP TYPE)
2. DETAIL RELATING TO THE CONCRETE BASE SLAB, CHAMBER DIAMETER, PRECAST CONCRETE RINGS AND BRICKWORK SHALL BE IN ACCORDANCE WITH THE ABOVE–MENTIONED DRAWINGS.
3. THE PROVISION OF STORMWATER MANHOLES WITH SILT TRAPS SHALL BE SUBJECT TO THE APPROVAL AUTHORITY'S CONSENT.

CITY OF CAPE TOWN
ISIXEKO SASEKAPA
STAD KAAPSTAD

CITY OF CAPE TOWN
URBAN MOBILITY

TITLE

SILT TRAP FOR STORMWATER MANHOLES

STANDARDS AND GUIDELINES DETAILS

SCALE	PAPER
1:25	A4
DRAWING No.	REV
SW12	A

P:\CAD\R&SD\TL_01 Design\T_1000B Standards\T_1000RS DESIGN_Roads and Stormwater\0002 Drawings_Version4.0\03 SW\SW12 – Silt Trap for Manhole.dwg

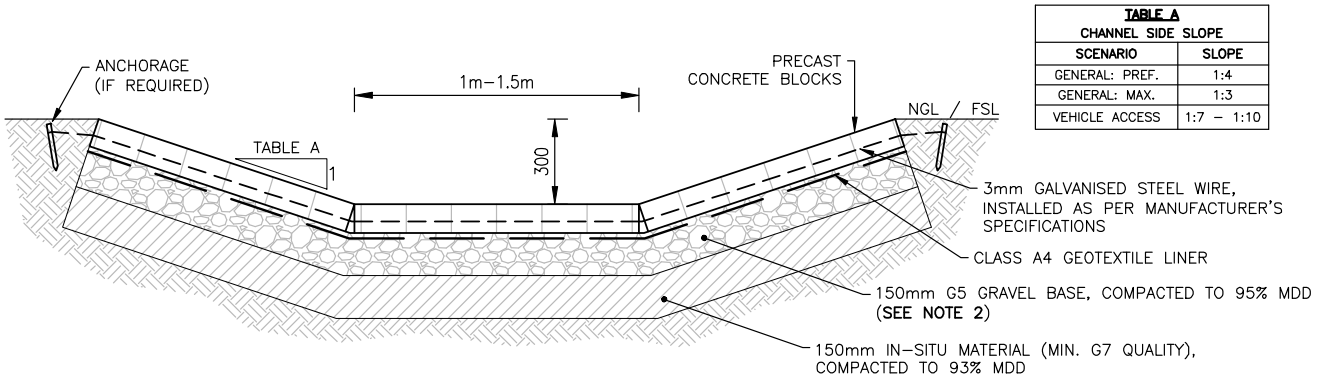

TABLE A CHANNEL SIDE SLOPE	
SCENARIO	SLOPE
GENERAL: PREF.	1:4
GENERAL: MAX.	1:3
VEHICLE ACCESS	1:7 – 1:10

FLEXIBLE CONCRETE BLOCK STRUCTURE

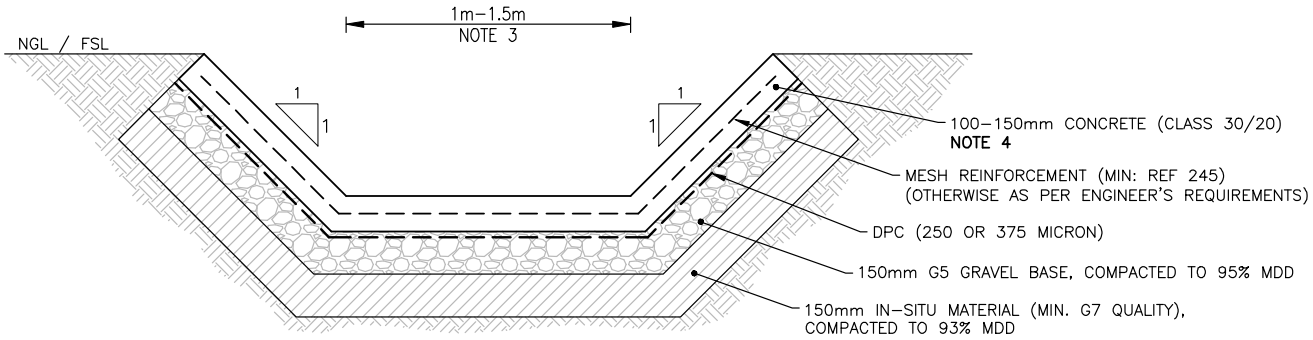

IN–SITU CAST CONCRETE CHANNEL

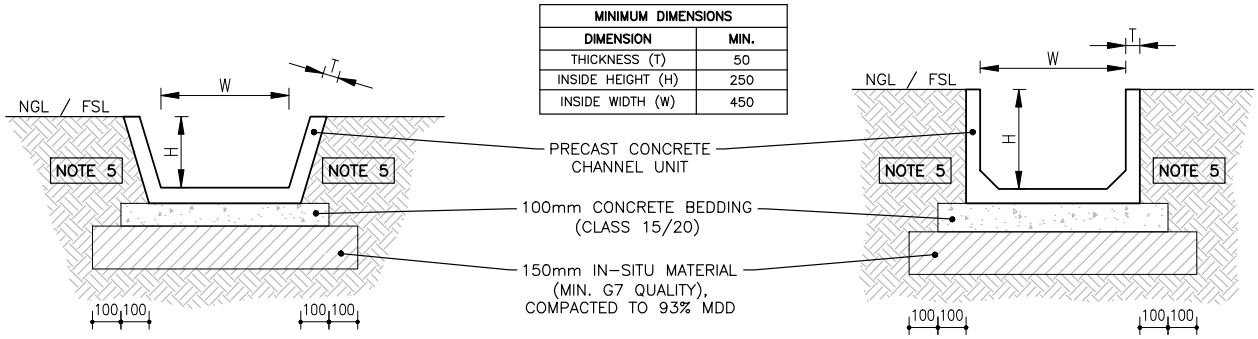

MINIMUM DIMENSIONS	
DIMENSION	MIN.
THICKNESS (T)	50
INSIDE HEIGHT (H)	250
INSIDE WIDTH (W)	450

PRECAST TRAPEZOIDAL/RECTANGULAR CONCRETE CHANNELS

NOTES:

1. DISCLAIMER:
   - THIS DRAWING MERELY CONTAINS TYPICAL EXAMPLES AND DETAILS OF CHANNELS THAT CAN BE USED TO CONVEY OVERLAND STORMWATER RUNOFF.
   - DETAILS, SUCH AS DIMENSIONS AND SLOPES, MAY VARY BASED ON SITE SPECIFIC CONDITIONS AND REQUIREMENTS.
   - THE FINAL OVERLAND CHANNEL PROPOSAL SHALL BE APPROVED BY THE APPROVAL AUTHORITY.
2. THE G5 LAYER SHALL BE STABILISED WITH CEMENT FOR THE FOLLOWING SCENARIOS:
   - WHERE VEHICLES WILL CROSS THE OVERLAND CHANNEL.
   - WHERE THE PROTECTION OF THE CHANNEL'S LONGITUDINAL SLOPE IS OF UTMOST IMPORTANCE.
3. WHERE THE CHANNEL WIDTH EXCEEDS 1.5m, SPECIALISED DESIGN MAY BE REQUIRED FOR THE REINFORCEMENT.
4. PANEL/JOINT SPACING AND JOINT TREATMENT SHALL BE SPECIFIED BY THE DESIGNER.
5. WHERE CHANNEL CHANGES DIRECTION OR ARE SITUATED ON A BEND, LATERAL PROTECTION/SUPPORT MAY BE REQUIRED FOR THE AFFECTED UNIT. SUCH DETAILS TO BE DISCUSSED WITH THE APPROVAL AUTHORITY.
6. ALL DIMENSIONS GIVEN IN mm, UNLESS SPECIFIED OTHERWISE.
7. WHERE VEHICLE ACCESS IS REQUIRED ACROSS AN OPEN CHANNEL, DESIGNERS SHALL COMPILE AND SUBMIT A SPECIAL DESIGN THEREOF FOR APPROVAL.

CITY OF CAPE TOWN
ISIXEKO SASEKAPA
STAD KAAPSTAD

CITY OF CAPE TOWN
URBAN MOBILITY

TITLE

LINED OVERLAND CHANNELS

STANDARDS AND GUIDELINES DETAILS

SCALE	PAPER
1:25	A4
DRAWING No.	REV
SW13	A

P:\CAD\R&SD\TL_01 Design\T_1000B Standards\T_1000RS DESIGN_Roads and Stormwater\0002 Drawings_Version4.0\03 SW\SW13 – Overland Channels_RevA.dwg

Detail Drawings

GENERAL

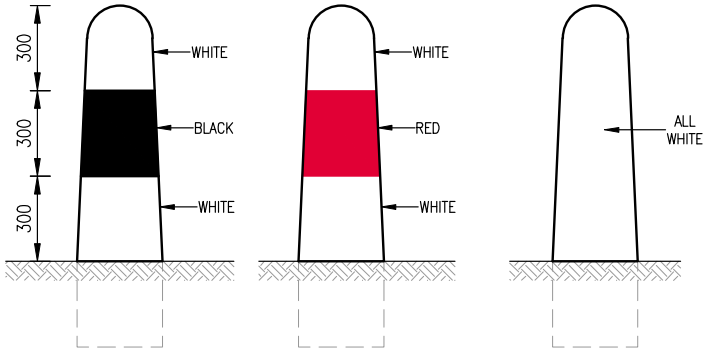

DETAIL A: PAINTING OF BOLLARD
(SEE NOTE 4)

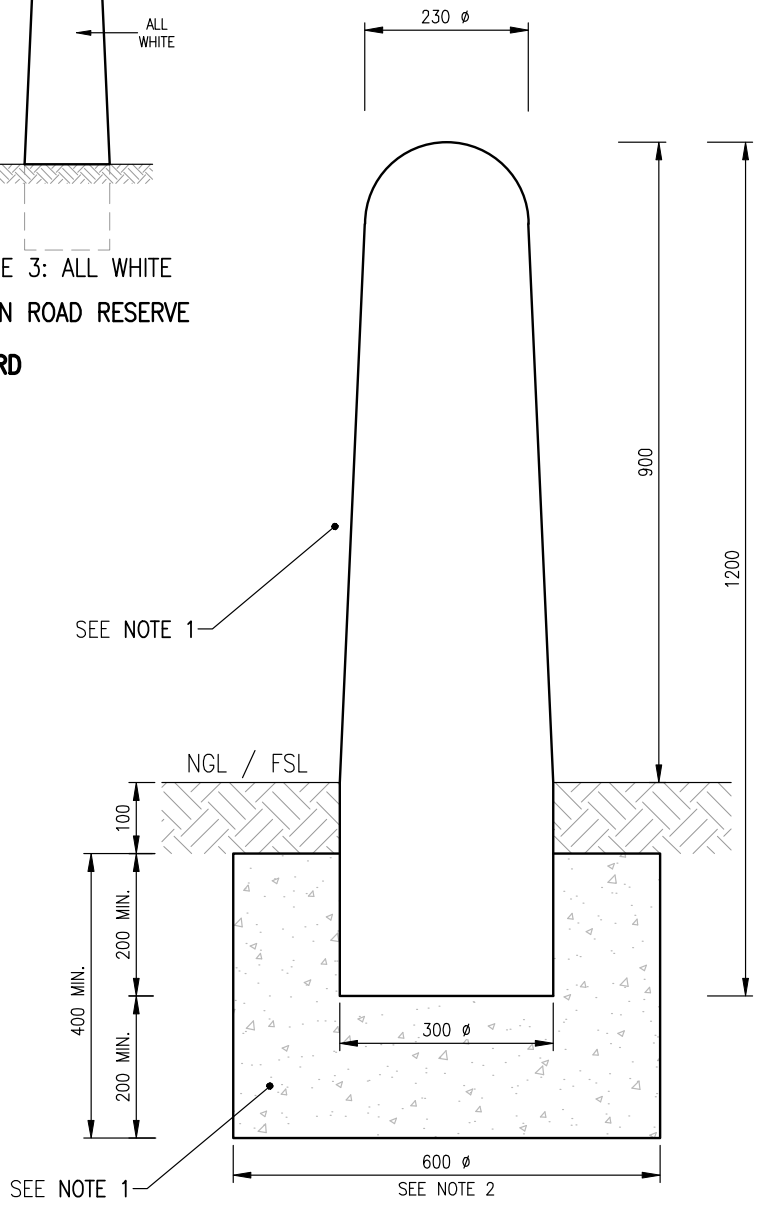

PLAN VIEW

NOTES:

1. FOOTING:
   - THE FOOTING SHALL GENERALLY BE STABILISED SOIL (4% CEMENT).
   - FOR INDUSTRIAL AREAS, THE FOOTING SHALL BE CONCRETE CLASS 20/20.
2. FOR INDUSTRIAL AREAS, THE DIAMETER OF THE FOOTING MAY BE INCREASED.
3. BOLLARD SHALL NOT BE PLANTED CLOSER THAN 500mm FROM ROAD EDGE, UNLESS, APPROVED OTHERWISE.
4. PAINTING OF BOLLARDS:
   - 4.1. WHERE THE APPROVAL AUTHORITY REQUIRES THE BOLLARD TO BE PAINTED, IT SHALL BE DONE AS PER "DETAIL A", USING RETRO-REFLECTIVE PAINT.
   - 4.2. "TYPE 1" AND "TYPE 2" SHALL BE APPLICABLE FOR BOLLARDS SITUATED INSIDE NMT FACILITIES. THE PAINT TYPE WHICH PROVIDES THE BEST CONTRAST TO THE SURROUNDING NMT FACILITY SURFACE SHALL BE USED.
   - 4.3. "TYPE 3" SHALL BE USED FOR BOLLARDS SITUATED INSIDE THE ROAD RESERVE.
5. BOLLARD SHALL HAVE A MINIMUM COMPRESSIVE STRENGTH OF 15MPa.

NGL: NATURAL GROUND LEVEL
FSL: FINISHED SURFACE LEVEL

CITY OF CAPE TOWN
ISIXEKO SASEKAPA
STAD KAAPSTAD

CITY OF CAPE TOWN
URBAN MOBILITY

TITLE

PRECAST CONCRETE BOLLARD

STANDARDS AND GUIDELINES DETAILS

SCALE	PAPER
1:10	A4
DRAWING No.	REV
GE1.1	A

P:\CAD\R&SD\TL_01 Design\T_1000B Standards\T_1000RS DESIGN_Roads and Stormwater\0002 Drawings_Version4.0\04 GE\GE1.1 - Bollard_Concrete RevA.dwg

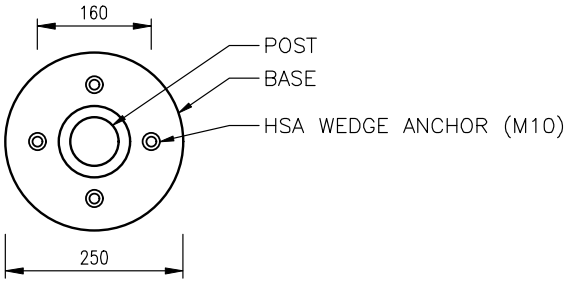

TOP VIEW

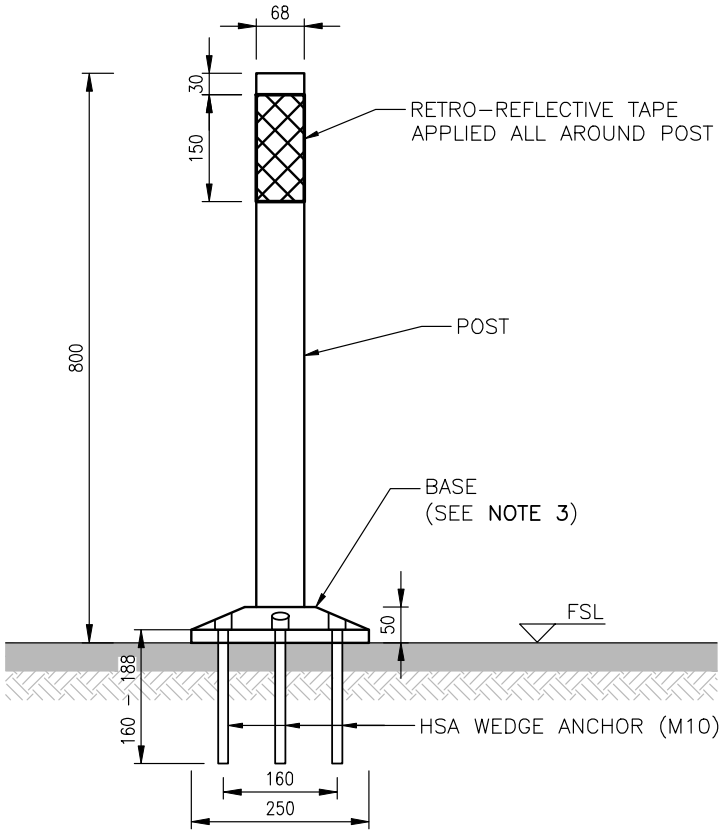

SECTION

NOTES:

1. THE INDICATED DIMENSIONS OF THE FLEXIBLE BOLLARD ARE CONSIDERED TYPICAL. THE FINAL DETAILS OF THE FLEXIBLE BOLLARDS, INCLUDING THE PROVISION OF THESE BOLLARDS, SHALL BE DISCUSSED AND AGREED WITH THE APPROVAL AUTHORITY, PRIOR TO IMPLEMENTATION.
2. POST:
   - 2.1. POST SHALL CONSIST OF LOW DENSITY POLYETHYLENE (LDPE) WITH ULTRAVIOLET STABILISERS.
   - 2.2. A RETRO-REFLECTIVE TAPE/SHEETING SHALL BE APPLIED AT THE TOP OF THE POST. THE SHEETING SHALL COMPLY WITH SANS1519-1.
3. BASE:
   - 3.1. BASE SHALL CONSISTS OF HIGH-IMPACT THERMOPLASTIC STYRENIC ALLOY.
   - 3.2. BASE SHALL BE SECURED TO THE SURFACE USING 4 X WEDGE ANCHORS (M10) AND ANCHORING ADHESIVES. THE ANCHOR LENGTH SHALL BE MINIMUM 160mm.
4. INSTALLATION
   - 4.1. THE HOLES SHALL BE DRILLED AS PER ANCHOR OPENINGS IN THE BASE.
   - 4.2. CLEAR AND CLEAN THE DRILLED HOLES, INCLUDING THE SURFACE AREA WHERE BASE WILL BE INSTALLED, OF ANY DEBRIS AND/OR STANDING WATER.
   - 4.3. APPLY THE ANCHOR ADHESIVE (AS PER MANUFACTURER'S SPECIFICATIONS) INTO THE DRILLED HOLES.
   - 4.4. POSITION THE BASE AND INSTALL WEDGE ANCHORS.

NGL: NATURAL GROUND LEVEL
FSL: FINISHED SURFACE LEVEL

CITY OF CAPE TOWN
ISIXEKO SASEKAPA
STAD KAAPSTAD

CITY OF CAPE TOWN
URBAN MOBILITY

TITLE

SURFACE MOUNTED FLEXIBLE BOLLARD

STANDARDS AND GUIDELINES DETAILS

SCALE	PAPER
1:10	A4
DRAWING No.	REV
GE1.2	A

P:\CAD\R&SD\TL_01 Design\T_1000B Standards\T_1000RS DESIGN_Roads and Stormwater\0002 Drawings_Version4.0\04 GE\GE1.2 - Bollard_Flexible RevA.dwg

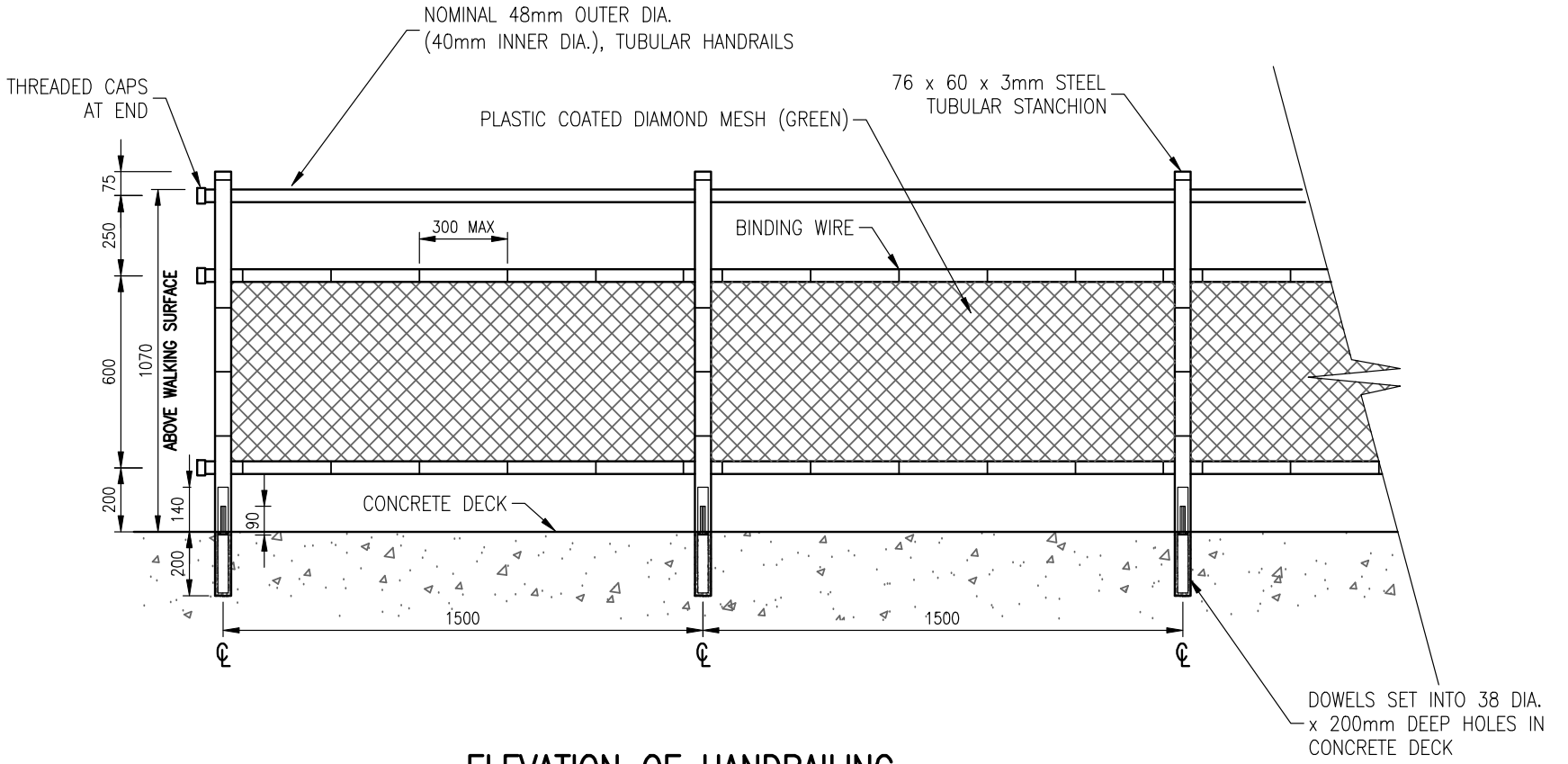

ELEVATION OF HANDRAILING

SCALE 1:20

CITY OF CAPE TOWN
ISIXEKO SASEKAPA
STAD KAAPSTAD

CITY OF CAPE TOWN
URBAN MOBILITY

TITLE

STEEL HANDRAIL:
STANCHION IN CONCRETE

STANDARDS AND GUIDELINES DETAILS

SHEET 1

SCALE	PAPER
1:20	A4
DRAWING No.	REV
GE2A	B

P:\CAD\R&SD\ITI_01 Design\T_1000B Standards\T_1000RS DESIGN_Roads and Stormwater\0002 Drawings_Version4.0\04 GE\GE2A – Steel Handrailing (Sheet 1) Rev_B.dwg

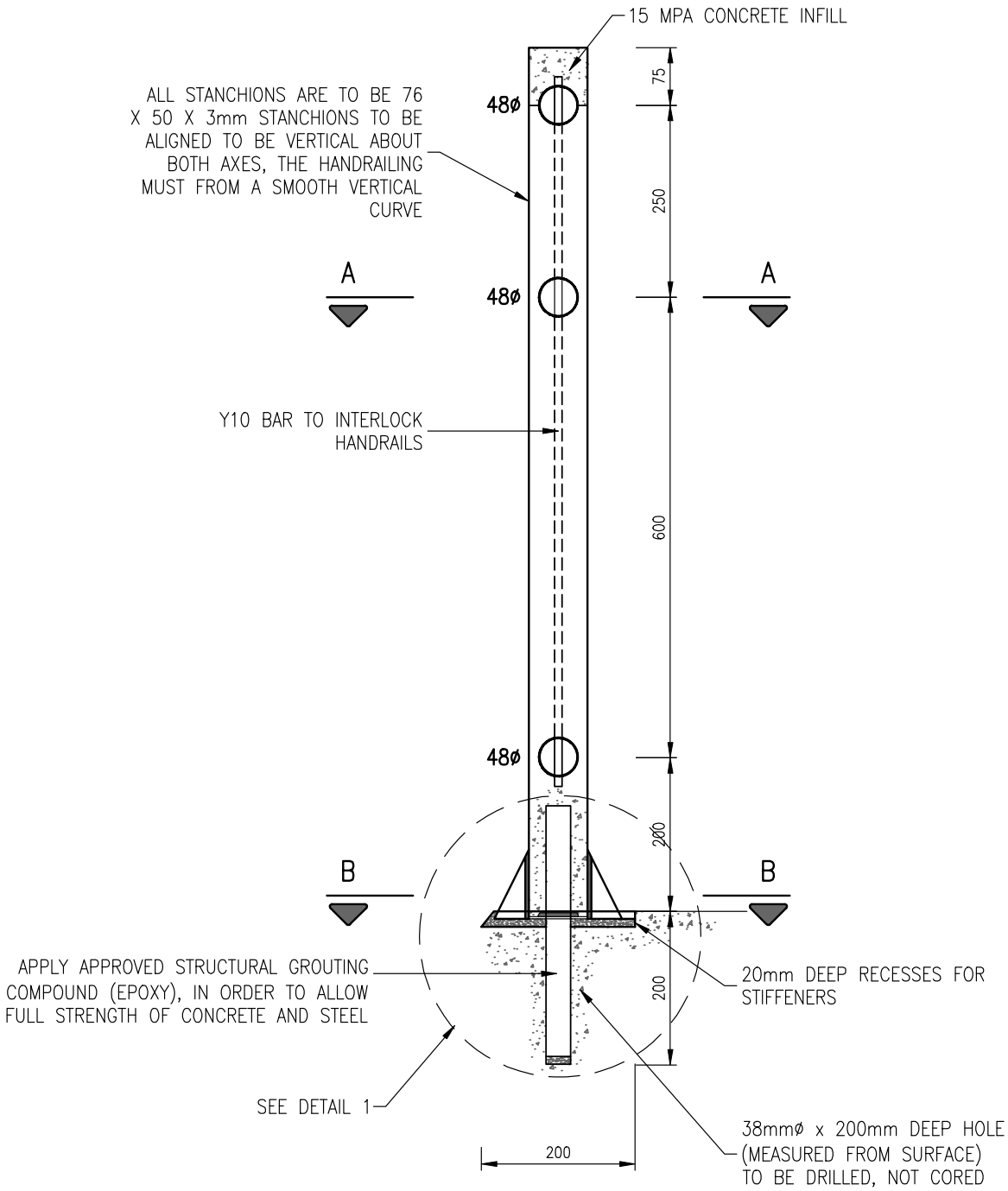

STANCHION INSTALLED IN CONCRETE

SCALE 1:8

P:\CAD\R&SD\ITL_01 Design\T_1000B Standards\T_1000RS DESIGN_Roads and Stormwater\0002 Drawings_Version4.0\04 GE\GE2B - Steel Handrailing (Sheet 2) Rev_A.dwg

CITY OF CAPE TOWN
ISIXEKO SASEKAPA
STAD KAAPSTAD

CITY OF CAPE TOWN
URBAN MOBILITY

TITLE

STEEL HANDRAIL:
STANCHION IN CONCRETE

STANDARDS AND GUIDELINES DETAILS

SHEET 2

SCALE	PAPER
1:8	A4
DRAWING No.	REV
GE2B	A

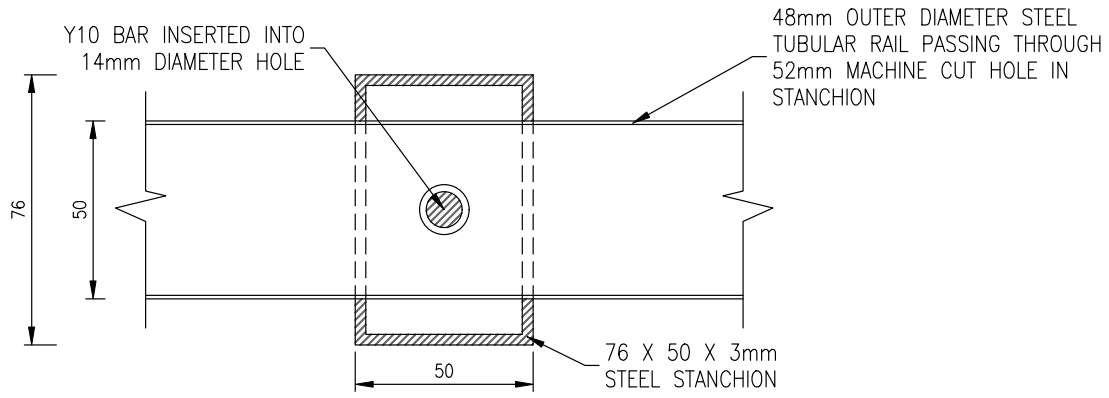

SECTION A–A

SCALE 1:2

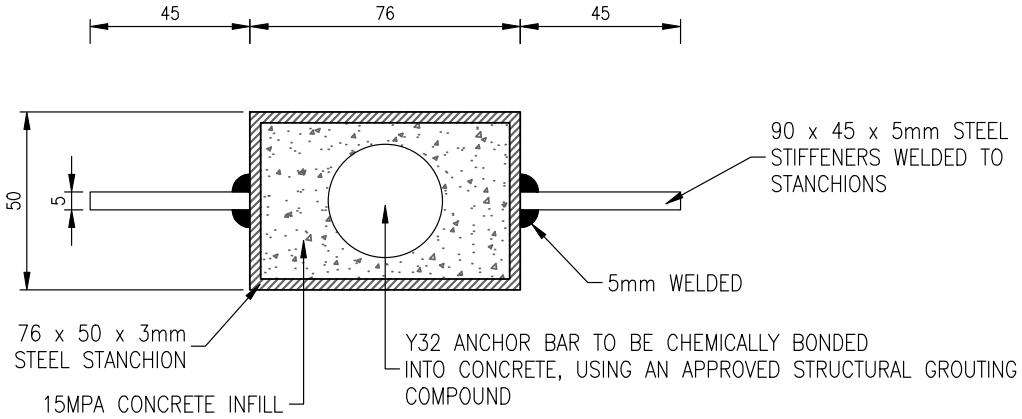

SECTION B–B

SCALE 1:2

P:\CAD\R&SD\ITL_01 Design\T_1000B Standards\T_1000RS DESIGN_Roads and Stormwater\0002 Drawings_Version4.0\04 GE\GE2C – Steel Handrailing (Sheet 3) Rev_A.dwg

CITY OF CAPE TOWN
ISIXEKO SASEKAPA
STAD KAAPSTAD

CITY OF CAPE TOWN
URBAN MOBILITY

TITLE

STEEL HANDRAIL:
STANCHION IN CONCRETE

STANDARDS AND GUIDELINES DETAILS

SHEET 3

SCALE	PAPER
1:2	A4
DRAWING No.	REV
GE2C	A

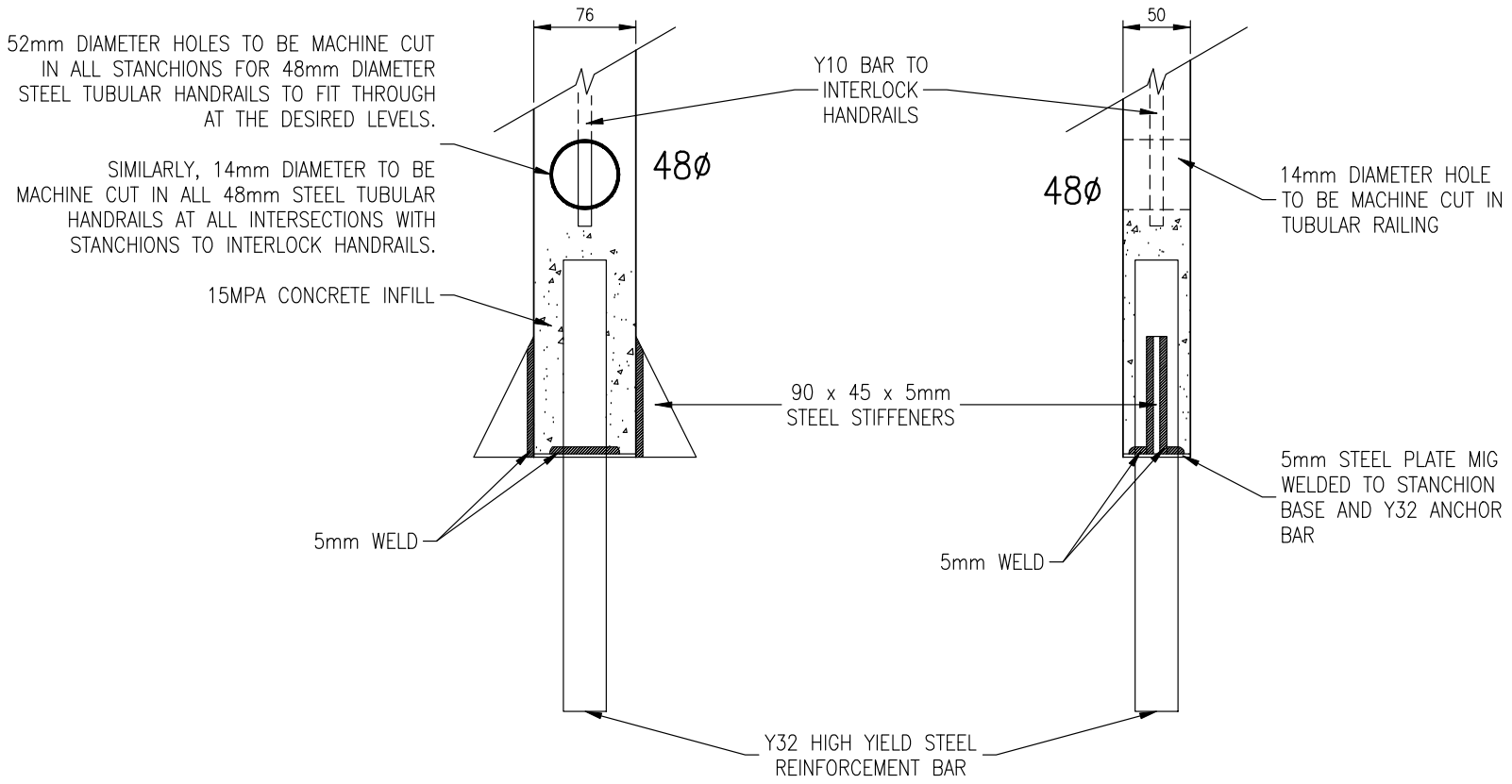

DETAIL 1

SCALE 1:5

CITY OF CAPE TOWN
ISIXEKO SASEKAPA
STAD KAAPSTAD

CITY OF CAPE TOWN
URBAN MOBILITY

TITLE

STEEL HANDRAIL: STANCHION IN CONCRETE

STANDARDS AND GUIDELINES DETAILS

SHEET 4

SCALE	PAPER
1:5	A4
DRAWING No.	REV
GE2D	A

P:\CAD\R&SD\ITI_01 Design\T_1000B Standards\T_1000RS DESIGN_Roads and Stormwater\0002 Drawings_Version4.0\04 GE\GE2D – Steel Handrailing (Sheet 4) Rev_A.dwg

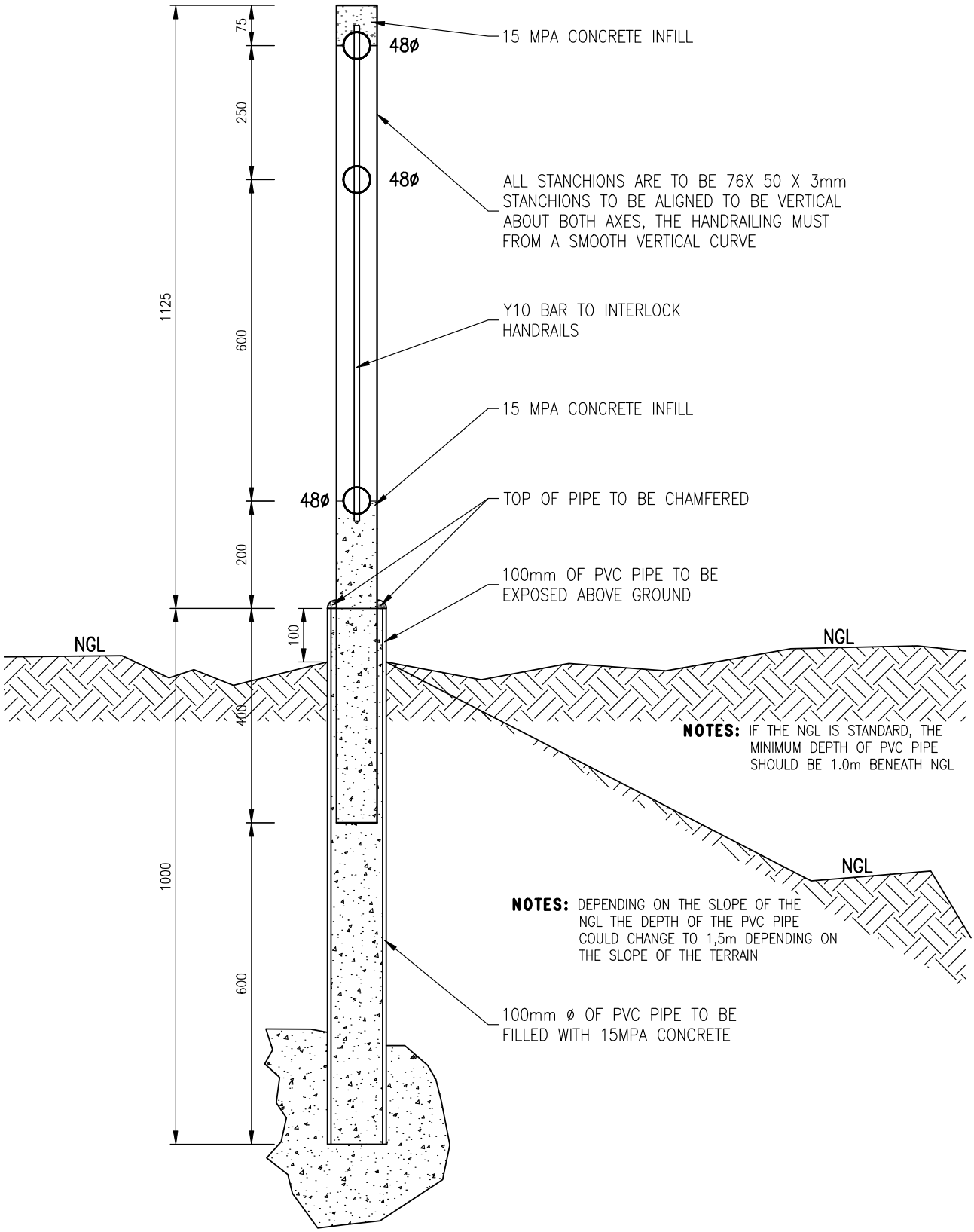

NGL: NATURAL GROUND LEVEL
FRL: FINISHED ROAD LEVEL
FSL: FINISHED SURFACE LEVEL

CITY OF CAPE TOWN
ISIXEKO SASEKAPA
STAD KAAPSTAD

CITY OF CAPE TOWN
URBAN MOBILITY

TITLE

STEEL HANDRAIL: STANCHION IN CONCRETE

STANDARDS AND GUIDELINES DETAILS

SHEET 5

SCALE	PAPER
1:10	A4
DRAWING No.	REV
GE2E	A

P:\CAD\R&SD\ITI_01 Design\T_1000B Standards\T_1000RS DESIGN_Roads and Stormwater\0002 Drawings_Version4.0\04 GE\GE2E - Steel Handrailing (Sheet 5) Rev_A.dwg

NOTES:

REMOVAL OF EXISTING PARAPETS AND DRILLING OF POCKETS

NEATLY CUT AND GRIND ALL EXISTING ALUMINIUM HANDRAILS TO 6mm BELOW THE SURFACE. THE EXISTING ALUMINIUM HANDRAILS ON THE STAIRWAYS TO BE DISPOSED OF BY THE CONTRACTOR. A DURABLE APPROVED STRUCTURAL REPAIR MORTAR TO BE APPLIED TO DAMAGED CONCRETE SURFACES.

ACCURATELY SET OUT, AND INDELIBLY MARK, THE LONGITUDINAL CENTRELINES OF THE HOLES TO BE DRILLED, AND MEASURE OUT AND MARK OFF THE HOLE CENTRE POSITIONS IN PREPARATION FOR THE DRILLING BY CONTRACTOR, BASED ON A SETTING-OUT ORIGIN (TO BE DETERMINED ON SITE).

DETERMINE THE POSITION OF THE EXISTING REINFORCEMENT BY USING A COVER METER, AND ADJUST THE SETTING-OUT OF THE HOLES ACCORDINGLY.

SUPERVISE AND DIRECT THE DRILLING TO ENSURE ACCURATE ADHERENCE TO THE GIVEN HOLE POSITIONS, ACHIEVEMENT OF THE MINIMUM DEPTHS AND THAT THE HOLES ARE PLUMB.

ONCE THE DRILLING HAS BEEN COMPLETED, CUT 20mm DEEP x 10mm WIDE x 270mm LONG TRANSVERSE SLOTS CENTERED ACROSS THE POCKETS FOR THE STABILISING PLATES ON THE HANDRAIL STANCHIONS.

THE HORIZONTAL AND VERTICAL ALIGNMENT OF THE PROPOSED HANDRAIL TO BE PLUMB IN BOTH PLANES.

GROUT THE STANCHIONS IN THE POCKETS USING AN APPROVED STRUCTURAL GROUTING COMPOUND, ENSURING THAT THE GROUT COMPLETELY FILLS THE POCKETS AND THAT ALL THE AIR HAS BEEN EXPELLED.

38mm DIAMETER POCKETS TO BE DRILLED VERTICALLY (PLUMB) INTO THE CONCRETE TO A DEPTH OF NOT LESS THAN 200mm. WHEN THE DRILL IS REMOVED. THE DEPTH MUST BE AT LEAST 200mm. THE POCKETS MUST BE CLEANED TO REMOVE ALL LOOSE DUST PRIOR TO GROUTING.

GENERAL:

1. ALL ASPECTS OF THE STRUCTURAL STEELWORK ARE TO BE IN ACCORDANCE WITH THE CURRENT EDITION OF SANS 10162: THE STRUCTURAL USE OF STEEL.

2. ALL STEEL IS TO BE GRADE 300W.

3 STANDARDS TO BE FABRICATED FROM STANDARD 76 x 50 x 3mm AND 48mm DIAMETER STEEL TUBES.

4 ALL WELDS TO BE 5mm MIG (UNLESS OTHERWISE SPECIFIED). WELD SCALE AND SPLATTER ARE TO BE REMOVED BY WIRE BRUSHING, OR GRINDING WHERE NECESSARY, PRIOR TO GALVANISING.

5 ALL HOLES TO BE MACHINE CUT.

6 ALL BURR TO BE REMOVED AND SHARP EDGES SMOOTHED OFF AFTER MACHINING.

7 ALL STANDARDS, RAILINGS, COUPLINGS AND CAPS TO BE HOT-DIP GALVANISED IN ACCORDANCE WITH SANS 121/ISO 1461 TO 85 MICRON MINIMUM THICKNESS. NO GALVANISED COMPONENT IS TO BE SUBJECTED TO ANY CUTTING, BENDING, WELDING, HEATING, ABRADING OR ANY OPERATION LIKELY TO RESULT IN DEFORMATION OF THE COMPONENT OR DAMAGE TO ITS PROTECTIVE COATING.

8 NOMINAL 48mm OUTER DIAMETER TUBULAR RAILING TO BE THREADED AT EITHER END TO TAKE COUPLINGS OR CAPS AS REQUIRED. NOTE THAT THE THREADED LENGTHS MUST BE CURTAILED, IN ORDER NOT TO EXPOSE UNTREATED STEEL TO CORROSION.

9 52mm HOLES ON EITHER SIDE OF THE TUBULAR STANCHION TO BE ALIGNED TO ALLOW FOR THE RAIL.

10 UNTREATED THREAD LENGTHS TO BE COATED WITH AN APPROVED ZINC-RICH EPOXY COATING, AS WELL AS THE INTERFACE OF THE STEEL STANCHIONS AND THE CONCRETE.

P:\CAD\R&SD\TL_01 Design\T_1000B Standards\T_1000RS DESIGN_Roads and Stormwater_Version4.0\04 GE\GE2F - Steel Handrailing (Sheet 6) Rev_A.dwg

CITY OF CAPE TOWN
ISIXEKO SASEKAPA
STAD KAAPSTAD

CITY OF CAPE TOWN
URBAN MOBILITY

TITLE

STEEL HANDRAIL:
STANCHION IN CONCRETE

STANDARDS AND GUIDELINES DETAILS

SHEET 6

SCALE	PAPER
-	A4
DRAWING No.	REV
GE2F	A

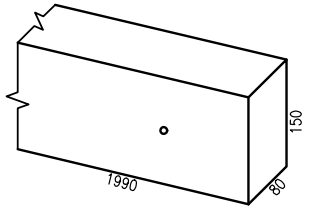

RAIL
1:10

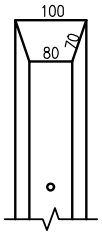

PALE
1:10

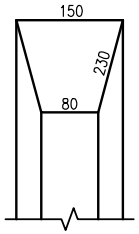

POST
1:10

TABLE 1: COMPONENT DETAILS	
COMPONENT	TYPICAL DIMENSIONS
POST	3000x230x150 (TAPERED TO 80mm)
PALE	2370x80x110 (TAPERED TO 80mm)
RAIL	1990x75x150
BOLTS	8mmø CARRIAGE BOLTS

NOTES:

1. ALL CONCRETE COMPONENTS SHALL BE CLASS 40/14.
2. CONCRETE FOOTINGS SHALL BE CLASS 25/20.
3. COMPONENT DIMENSIONS AND MEASUREMENTS ARE APPROXIMATE AND MAY DIFFER, DEPENDING ON MANUFACTURER.

NGL: NATURAL GROUND LEVEL
FRL: FINISHED ROAD LEVEL
FSL: FINISHED SURFACE LEVEL

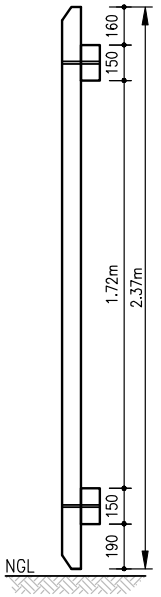

SECTION B–B:
PALE
N.T.S.

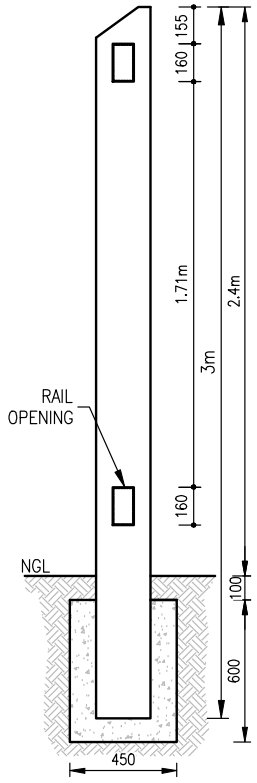

SECTION A–A:
POST
N.T.S.

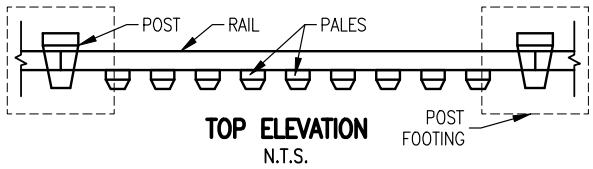

TOP ELEVATION
N.T.S.

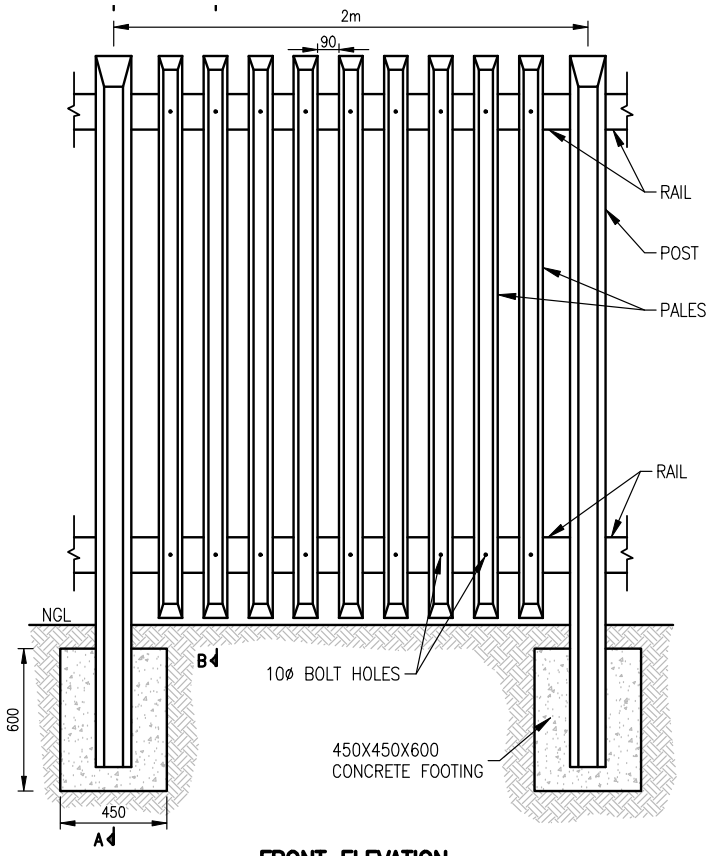

FRONT ELEVATION
N.T.S.

CITY OF CAPE TOWN
ISIXEKO SASEKAPA
STAD KAAPSTAD

CITY OF CAPE TOWN
URBAN MOBILITY

TITLE

CONCRETE PALISADE FENCING

STANDARDS AND GUIDELINES DETAILS

SCALE	PAPER
SHOWN	A4
DRAWING No.	REV
GE3	B

P:\CAD\R&SD\ITI_01 Design\T_1000B Standards\T_1000RS DESIGN_Roads and Stormwater\0002 Drawings_Version4.0\04 GE\GE3 – Concrete Palisade Fencing_RevB.dwg

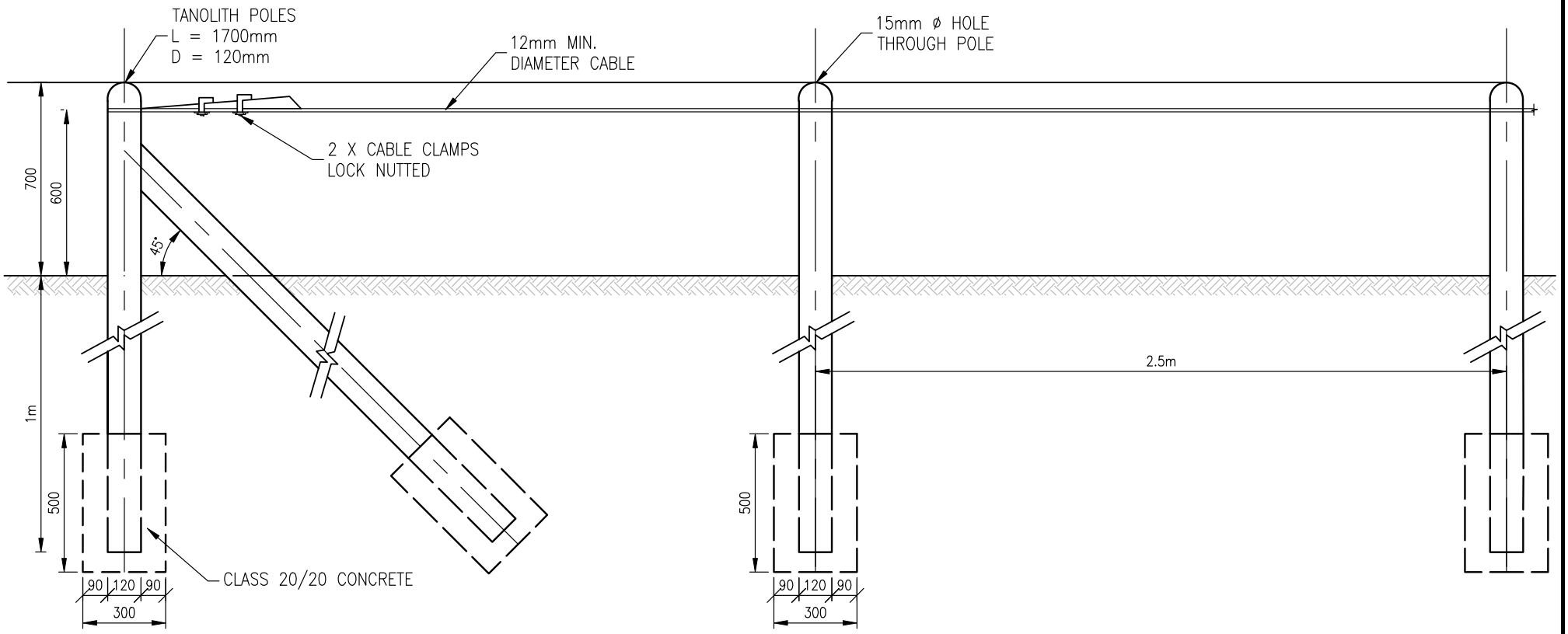

CABLE FENCE DETAIL (BARRIER)

CITY OF CAPE TOWN
ISIXEKO SASEKAPA
STAD KAAPSTAD

CITY OF CAPE TOWN
URBAN MOBILITY

TITLE

CABLE FENCE

STANDARDS AND GUIDELINES DETAILS

SCALE	PAPER
1:20	A4
DRAWING No.	REV
GE4	B

P:\CAD\R&SD\ITI_01 Design\T_1000B Standards\T_1000RS DESIGN_Roads and Stormwater\0002 Drawings_Version4.0\04 GE\GE4 – Cable Fence_RevB.dwg

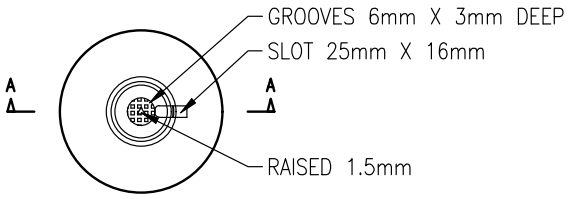

PLAN VIEW

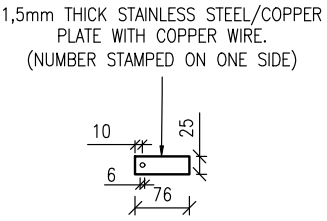

TAG FOR NUMBER

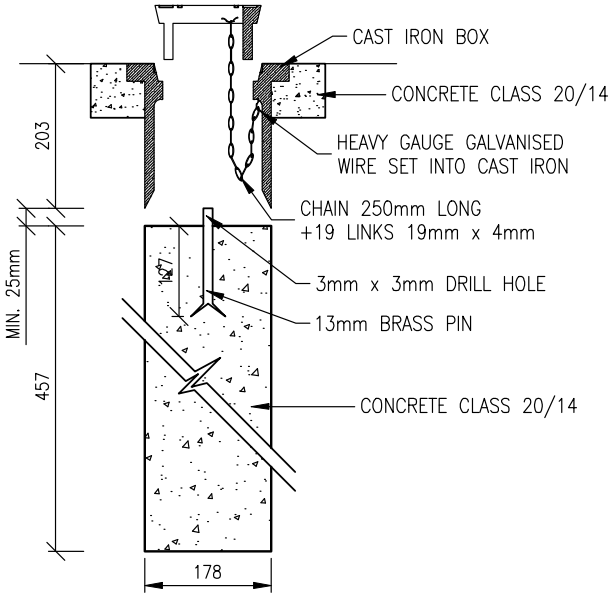

SECTION A–A

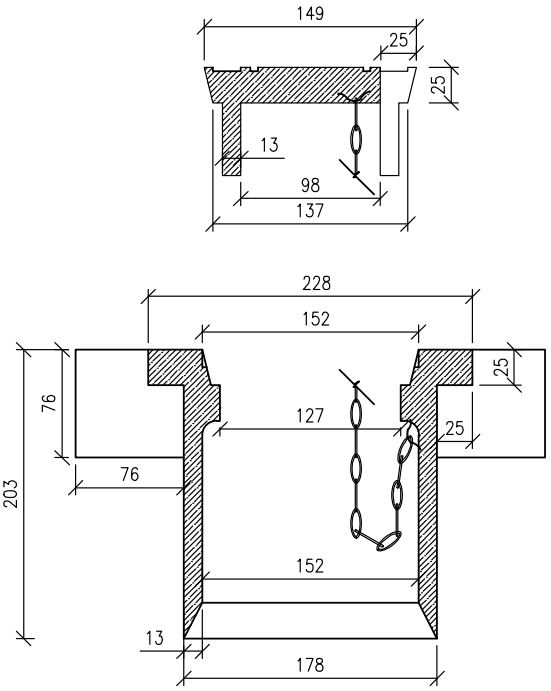

CAST IRON COVER

SCALE 1:5

NOTES:

1. DIMENSIONS AND TOLERANCES:
   a. ALL CASTINGS, CHAINS AND CHAIN STAPLES SHALL CONFORM TO THE RELEVANT DIMENSIONAL REQUIREMENTS GIVEN ON THE PLAN.
   b. COVERS AND FRAMES SHALL BE FREE FROM TWIST, SHALL BE SO FINISHED THAT COVERS REST EVENLY ON INTENDED MUTUAL BEARING SURFACES AND SHALL NOT ROCK. WHEN FITTED TO FRAMES, COVERS SHALL FIT SUFFICIENTLY LOOSELY TO BE RETAINED IN POSITION BY WEIGHT ONLY. THE TOP SURFACES OF COVERS, INCLUDING ANTI–SLIP PROJECTION, SHALL NOT PROTRUDE ABOVE, NOR BE MORE THAN 1,5mm BELOW THE TOPS OF ASSOCIATED FRAMES.

2. MATERIAL AND FINISH:
   a. CASTINGS SHALL BE MANUFACTURED IN GOOD QUALITY GREY CAST IRON AND NOT OF IRON WHICH APPEARS WHITE ON FRACTURE. ALL CASTINGS SHALL BE SOUND, HOMOGENUOUS AND FREE FROM SAND AND BELOW HOLES, COLD SHUTS, SCAB AND OTHER DEFECTS.
   b. THE CHEMICAL ANALYSES OF GREY CAST IRON IS GIVEN IN THE FOLLOWING TABLE:

CARBON %	SILICON %	SULPHUR %	PHOSPHORUS %	MANGANESE %
3,5–4,0	1.25–2,0	0.05	0.02	0,75–1,0

   c. CHAINS AND CHAIN STAPLES SHALL BE MILD STEEL.
   d. CHAINS SHALL BE HOT DIPPED GALVANISED.

CITY OF CAPE TOWN
ISIXEKO SASEKAPA
STAD KAAPSTAD

CITY OF CAPE TOWN
URBAN MOBILITY

TITLE

TOWN SURVEY MARK

STANDARDS AND GUIDELINES DETAILS

SCALE	PAPER
1:10	A4
DRAWING No.	REV
GE5	B

P:\CAD\R&SD\TL_01 Design\T_1000B Standards\T_1000RS DESIGN_Roads and Stormwater\0002 Drawings_Version4.0\04 GE\GE5 – Town Survey Marker_RevB.dwg

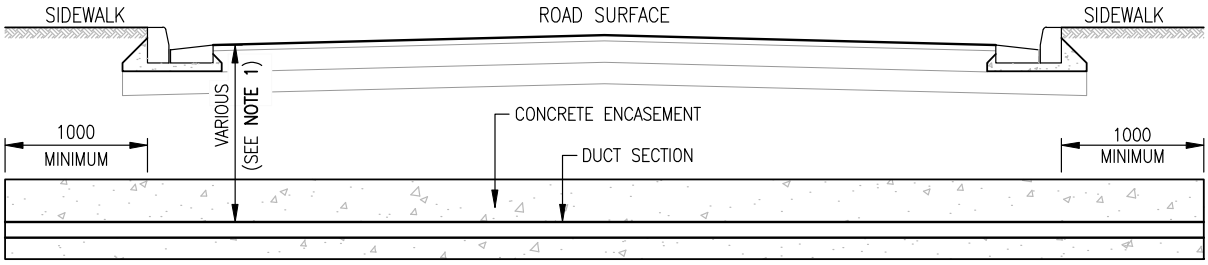

TYPICAL CROSS SECTION UNDER ROADWAY

SCALE 1:50

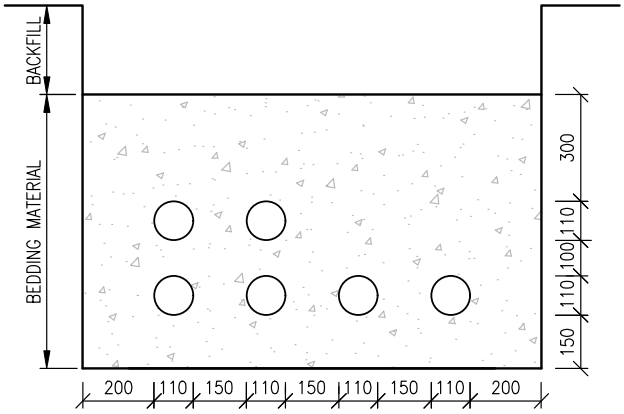

FIVE TO EIGHT DUCTS

SCALE 1:20

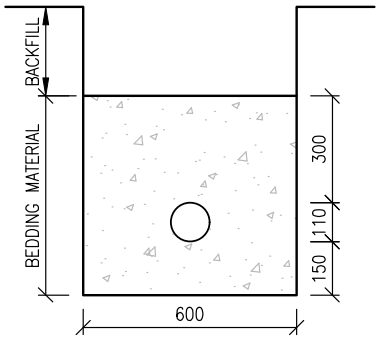

ONE DUCT

SCALE 1:20

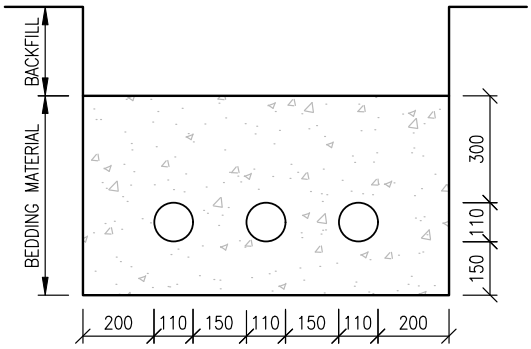

TWO TO FOUR DUCTS

SCALE 1:20

NOTES:

1. MINIMUM DEPTH OF SERVICE BELOW FINISHED ROAD LEVEL AS PER SECTION 13.2.
2. ALL DUCTS SHALL HAVE A MINIMUM CLEARANCE OF 750mm BETWEEN ROAD SURFACE AND TOP OF DUCT/DUCT ENCASEMENT.
3. DUCTS SHALL BE ENCASED IN CONCRETE WITH A 28 DAY COMPRESSIVE STRENGTH OF 10MPa.
4. PIPE DUCTS TO BE HEAVY DUTY (SDR 34) PVC-U (SANS 791).
5. DUCTS SHALL EXTEND 1m PAST THE KERB ON BOTH SIDES OF THE ROAD.
6. A 2.5mm ø GALVANISED DRAW WIRE WITH A 2m FREE LENGTH AT EACH END SHALL BE LEFT IN EACH DUCT.
7. DUCTS SHALL BE SEALED AFTER INSTALLATION BY A DOUBLE LAYER OF DPC SHEETING TIED AROUND THE ENDS WITH GALVANISED BINDING WIRE TO PREVENT THE INGRESS OF OBSTRUCTIONS. ALTERNATIVELY, END CAPS TO BE PROVIDED.
8. THE POSITION OF THE INSTALLED DUCTS TO BE PERMANENTLY MARKED AS DESCRIBED IN SECTION 13.5.

CITY OF CAPE TOWN
ISIXEKO SASEKAPA
STAD KAAPSTAD

CITY OF CAPE TOWN
URBAN MOBILITY

TITLE

SPECIFICATIONS FOR THE INSTALLATION OF ELECTRICAL DUCTS

STANDARDS AND GUIDELINES DETAILS

SHEET 1

SCALE	PAPER
SHOWN	A4
DRAWING No.	REV
GE6.1	B

P:\CAD\R&SD\TL_01 Design\T_1000B Standards\T_1000RS DESIGN_Roads and Stormwater\0002 Drawings_Version4.0\04 GE\GE6.1 – Specification for Installation of Electrical Ducts_RevB.dwg

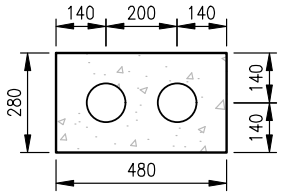

A TYPE
(2x110)

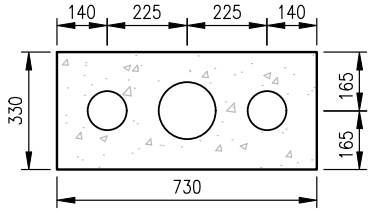

B TYPE
(2x110 ; 1x160)

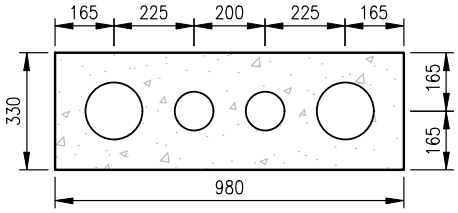

C TYPE
(2x110 ; 2x160)

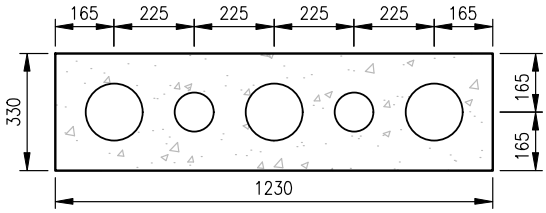

D TYPE
(2x110 ; 3x160)

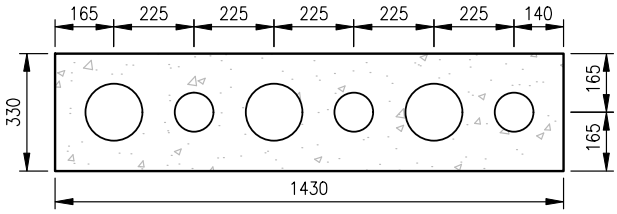

E TYPE
(3x110 ; 3x160)

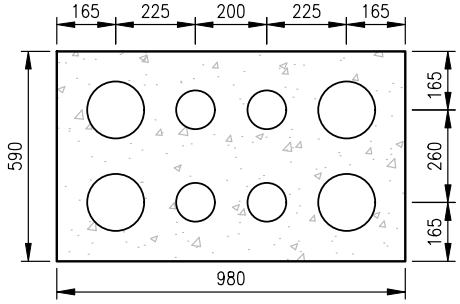

F TYPE
(4x110 ; 4x160)

NOTES:

1. MINIMUM DEPTH OF SERVICE BELOW FINISHED ROAD LEVEL AS PER SECTION 13.2.
2. ALL DUCTS SHALL HAVE A MINIMUM CLEARANCE OF 750mm BETWEEN ROAD SURFACE AND TOP OF DUCT/DUCT ENCASEMENT.
3. DUCTS SHALL BE ENCASED IN CONCRETE WITH A 28 DAY COMPRESSIVE STRENGTH OF 10MPa.
4. PIPE DUCTS TO BE HEAVY DUTY (SDR 34) PVC-U (SANS 791).
5. DUCTS SHALL EXTEND 1m PAST THE KERB ON BOTH SIDES OF THE ROAD.
6. A 2.5mm ø GALVANISED DRAW WIRE WITH A 2m FREE LENGTH AT EACH END SHALL BE LEFT IN EACH DUCT.
7. DUCTS SHALL BE SEALED AFTER INSTALLATION BY A DOUBLE LAYER OF DPC SHEETING TIED AROUND THE ENDS WITH GALVANISED BINDING WIRE TO PREVENT THE INGRESS OF OBSTRUCTIONS. ALTERNATIVELY, END CAPS TO BE PROVIDED.
8. THE POSITION OF THE INSTALLED DUCTS TO BE PERMANENTLY MARKED AS DESCRIBED IN SECTION 13.5.

CITY OF CAPE TOWN
ISIXEKO SASEKAPA
STAD KAAPSTAD

CITY OF CAPE TOWN
URBAN MOBILITY

TITLE

SPECIFICATIONS FOR THE INSTALLATION OF ELECTRICAL DUCTS

STANDARDS AND GUIDELINES DETAILS

SHEET 2

SCALE	PAPER
SHOWN	A4
DRAWING No.	REV
GE6.2	B

P:\CAD\R&SD\ITL_01 Design\T_1000B Standards\T_1000RS DESIGN_Roads and Stormwater\0002 Drawings_Version4.0\04 GE\GE6.2 - Specification for Installation of Electrical Ducts_RevB.dwg

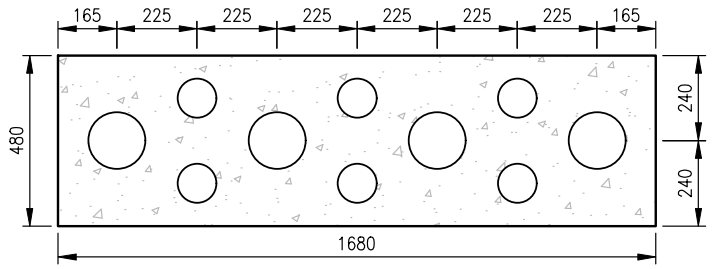

G TYPE

(6x110 ; 4x160)

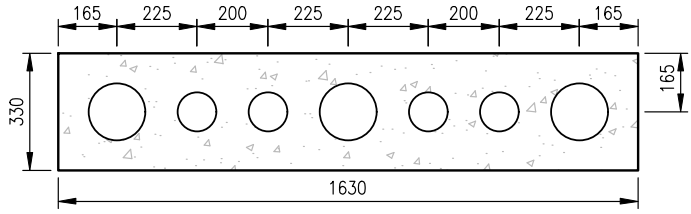

H TYPE

(4x110 ; 3x160)

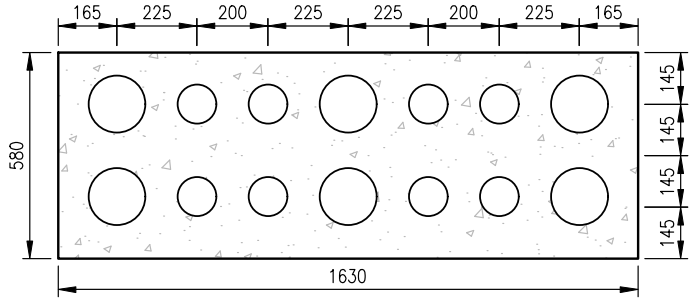

J TYPE

(8x110 ; 6x160)

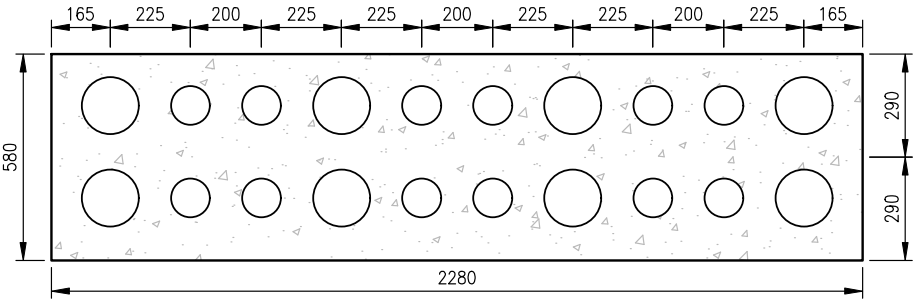

K TYPE

(12x110 ; 8x160)

NOTES:

1. MINIMUM DEPTH OF SERVICE BELOW FINISHED ROAD LEVEL AS PER SECTION 13.2.
2. ALL DUCTS SHALL HAVE A MINIMUM CLEARANCE OF 750mm BETWEEN ROAD SURFACE AND TOP OF DUCT/DUCT ENCASEMENT.
3. DUCTS SHALL BE ENCASED IN CONCRETE WITH A 28 DAY COMPRESSIVE STRENGTH OF 10MPa.
4. PIPE DUCTS TO BE HEAVY DUTY (SDR 34) PVC-U (SANS 791).
5. DUCTS SHALL EXTEND 1m PAST THE KERB ON BOTH SIDES OF THE ROAD.
6. A 2.5mm ø GALVANISED DRAW WIRE WITH A 2m FREE LENGTH AT EACH END SHALL BE LEFT IN EACH DUCT.
7. DUCTS SHALL BE SEALED AFTER INSTALLATION BY A DOUBLE LAYER OF DPC SHEETING TIED AROUND THE ENDS WITH GALVANISED BINDING WIRE TO PREVENT THE INGRESS OF OBSTRUCTIONS. ALTERNATIVELY, END CAPS TO BE PROVIDED.
8. THE POSITION OF THE INSTALLED DUCTS TO BE PERMANENTLY MARKED AS DESCRIBED IN SECTION 13.5.

CITY OF CAPE TOWN
ISIXEKO SASEKAPA
STAD KAAPSTAD

CITY OF CAPE TOWN
URBAN MOBILITY

TITLE

SPECIFICATIONS FOR THE INSTALLATION OF ELECTRICAL DUCTS

STANDARDS AND GUIDELINES DETAILS

SHEET 3

SCALE	PAPER
SHOWN	A4
DRAWING No.	REV
GE6.3	B

P:\CAD\R&SD\TTL_01 Design\T_1000B Standards\T_1000RS DESIGN_Roads and Stormwater\0002 Drawings_Version4.0\04 GE\GE6.3 - Specification for Installation of Electrical Ducts_RevB.dwg

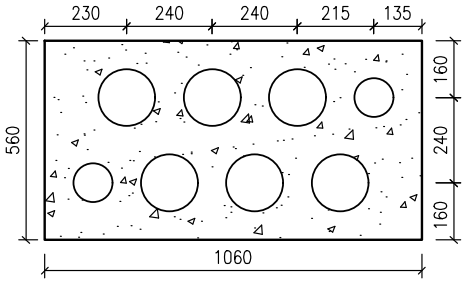

P (F) TYPE
TO ACCOMMODATE 3 x Sc. CABLES FLAT
(2x110 ; 6x160)

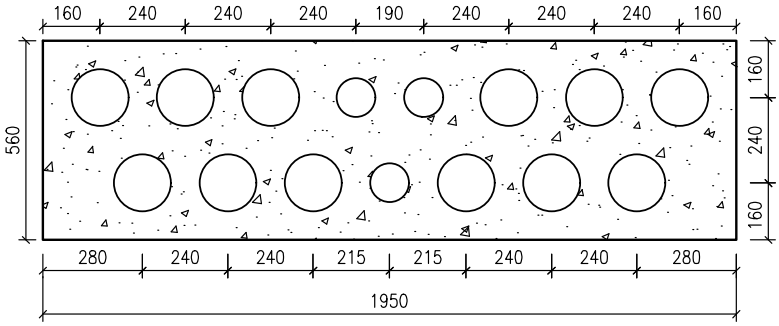

L (F) TYPE
TO ACCOMMODATE 6 x Sc. CABLES FLAT
(3x110 ; 12x160)

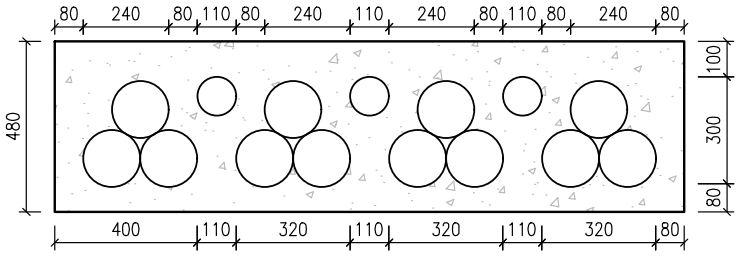

L (T) TYPE
TO ACCOMMODATE 6 x Sc. CABLES IN TREFOIL
(3x110 ; 3x160)

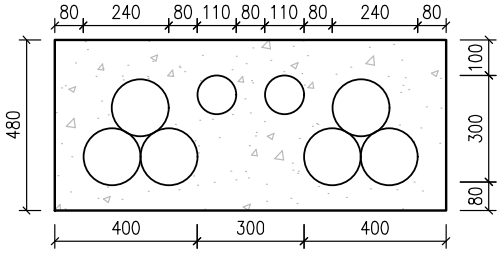

L (T) TYPE
TO ACCOMMODATE 3 x Sc. CABLES IN TREFOIL
(3x110 ; 3x160)

NOTES:

1. MINIMUM DEPTH OF SERVICE BELOW FINISHED ROAD LEVEL AS PER SECTION 13.2.
2. ALL DUCTS SHALL HAVE A MINIMUM CLEARANCE OF 750mm BETWEEN ROAD SURFACE AND TOP OF DUCT/DUCT ENCASEMENT.
3. DUCTS SHALL BE ENCASED IN CONCRETE WITH A 28 DAY COMPRESSIVE STRENGTH OF 10MPa.
4. PIPE DUCTS TO BE HEAVY DUTY (SDR 34) PVC-U (SANS 791).
5. DUCTS SHALL EXTEND 1m PAST THE KERB ON BOTH SIDES OF THE ROAD.
6. A 2.5mm ø GALVANISED DRAW WIRE WITH A 2m FREE LENGTH AT EACH END SHALL BE LEFT IN EACH DUCT.
7. DUCTS SHALL BE SEALED AFTER INSTALLATION BY A DOUBLE LAYER OF DPC SHEETING TIED AROUND THE ENDS WITH GALVANISED BINDING WIRE TO PREVENT THE INGRESS OF OBSTRUCTIONS. ALTERNATIVELY, END CAPS TO BE PROVIDED.
8. THE POSITION OF THE INSTALLED DUCTS TO BE PERMANENTLY MARKED AS DESCRIBED IN SECTION 13.5.

CITY OF CAPE TOWN
ISIXEKO SASEKAPA
STAD KAAPSTAD

CITY OF CAPE TOWN
URBAN MOBILITY

TITLE

SPECIFICATIONS FOR THE INSTALLATION OF ELECTRICAL DUCTS

STANDARDS AND GUIDELINES DETAILS

SHEET 4

SCALE	PAPER
SHOWN	A4
DRAWING No.	REV
GE6.4	B

P:\CAD\R&SD\TL_01 Design\T_1000B Standards\T_1000RS DESIGN_Roads and Stormwater\0002 Drawings_Version4.0\04 GE\GE6.4 - Specification for Installation of Electrical Ducts_RevB.dwg

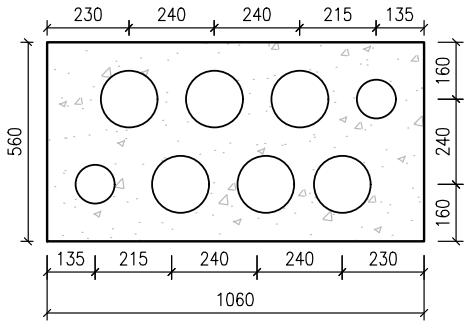

L (F160) TYPE
TO ACCOMMODATE 3 x Sc. CABLES IN FLAT
(3x110 ; 12x160)

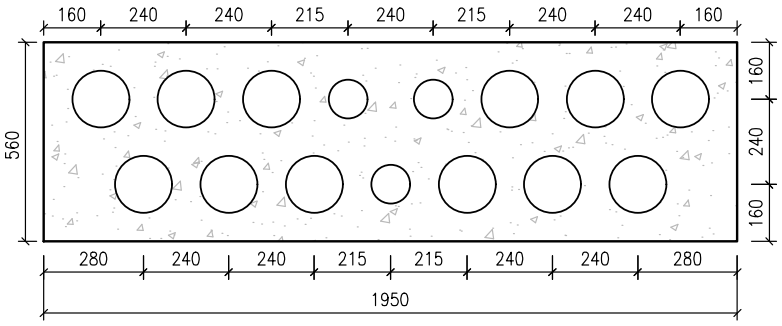

L (F160) TYPE
TO ACCOMMODATE 6 x Sc. CABLES IN FLAT
(3x110 ; 12x160)

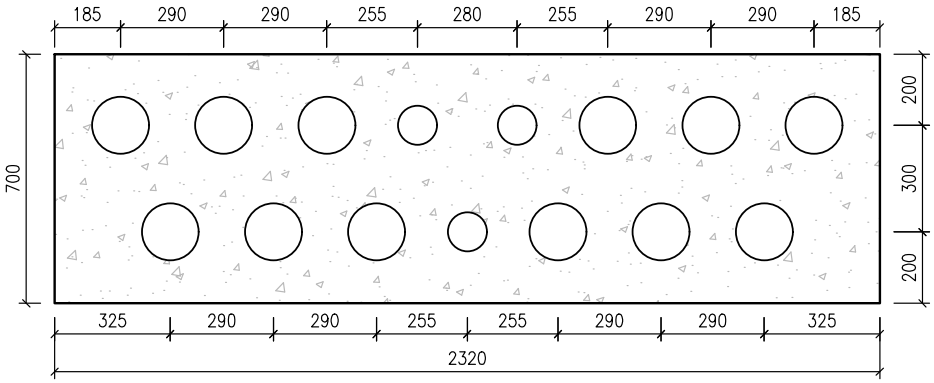

L F(210) TYPE
TO ACCOMMODATE 6 x Sc. CABLES FLAT
(3x110 ; 12x210)

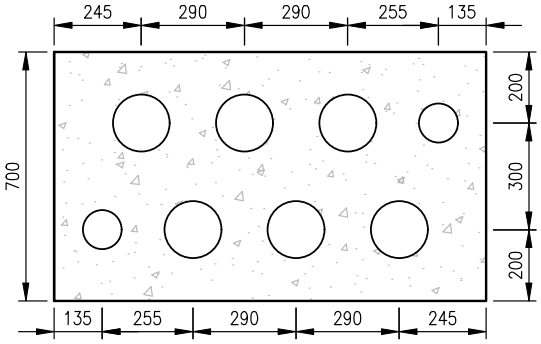

P F(210) TYPE
TO ACCOMMODATE 6 x Sc. CABLES FLAT
(2x110 ; 6x210)

NOTES:

1. MINIMUM DEPTH OF SERVICE BELOW FINISHED ROAD LEVEL AS PER SECTION 13.2.
2. ALL DUCTS SHALL HAVE A MINIMUM CLEARANCE OF 750mm BETWEEN ROAD SURFACE AND TOP OF DUCT/DUCT ENCASEMENT.
3. DUCTS SHALL BE ENCASED IN CONCRETE WITH A 28 DAY COMPRESSIVE STRENGTH OF 10MPa.
4. PIPE DUCTS TO BE HEAVY DUTY (SDR 34) PVC-U (SANS 791).
5. THE POSITION OF THE INSTALLED DUCTS TO BE PERMANENTLY MARKED AS DESCRIBED IN SECTION 13.5..

CITY OF CAPE TOWN
ISIXEKO SASEKAPA
STAD KAAPSTAD

CITY OF CAPE TOWN
URBAN MOBILITY

TITLE

SPECIFICATIONS FOR THE INSTALLATION OF ELECTRICAL DUCTS

STANDARDS AND GUIDELINES DETAILS

SHEET 5

SCALE	PAPER
SHOWN	A4
DRAWING No.	REV
GE6.5	B

P:\CAD\R&SD\TT_01 Design\T_1000B Standards\T_1000RS DESIGN_Roads and Stormwater\0002 Drawings_Version4.0\04 GE\GE6.5 – Specification for Installation of Electrical Ducts_RevB.dwg

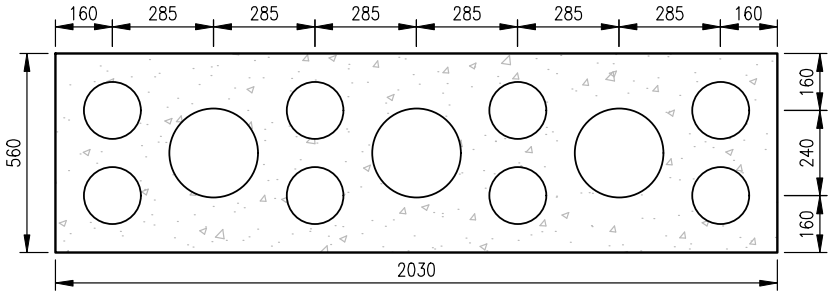

M TYPE
TO ACCOMMODATE 2 x 3 CORE CABLES
(8x160 ; 3x250)

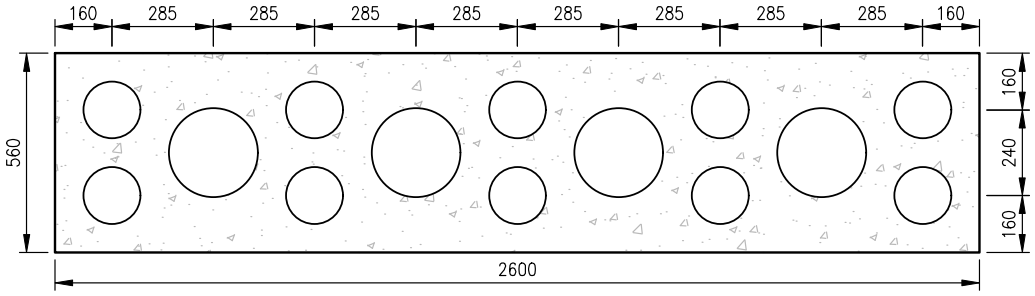

N TYPE
TO ACCOMMODATE 2 x 3 CORE CABLES
(10x160 ; 4x250)

NOTES:

1. MINIMUM DEPTH OF SERVICE BELOW FINISHED ROAD LEVEL AS PER SECTION 13.2.
2. ALL DUCTS SHALL HAVE A MINIMUM CLEARANCE OF 750mm BETWEEN ROAD SURFACE AND TOP OF DUCT/DUCT ENCASEMENT.
3. DUCTS SHALL BE ENCASED IN CONCRETE WITH A 28 DAY COMPRESSIVE STRENGTH OF 10MPa.
4. PIPE DUCTS TO BE HEAVY DUTY (SDR 34) PVC-U (SANS 791).
5. THE POSITION OF THE INSTALLED DUCTS TO BE PERMANENTLY MARKED AS DESCRIBED IN SECTION 13.5..

CITY OF CAPE TOWN
ISIXEKO SASEKAPA
STAD KAAPSTAD

CITY OF CAPE TOWN
URBAN MOBILITY

TITLE

SPECIFICATIONS FOR THE INSTALLATION OF ELECTRICAL DUCTS

STANDARDS AND GUIDELINES DETAILS

SHEET 6

SCALE	PAPER
SHOWN	A4
DRAWING No.	REV
GE6.6	B

P:\CAD\R&SD\TT_01 Design\T_1000B Standards\T_1000RS DESIGN_Roads and Stormwater\0002 Drawings_Version4.0\04 GE\GE6.6 - Specification for Installation of Electrical Ducts_RevB.dwg

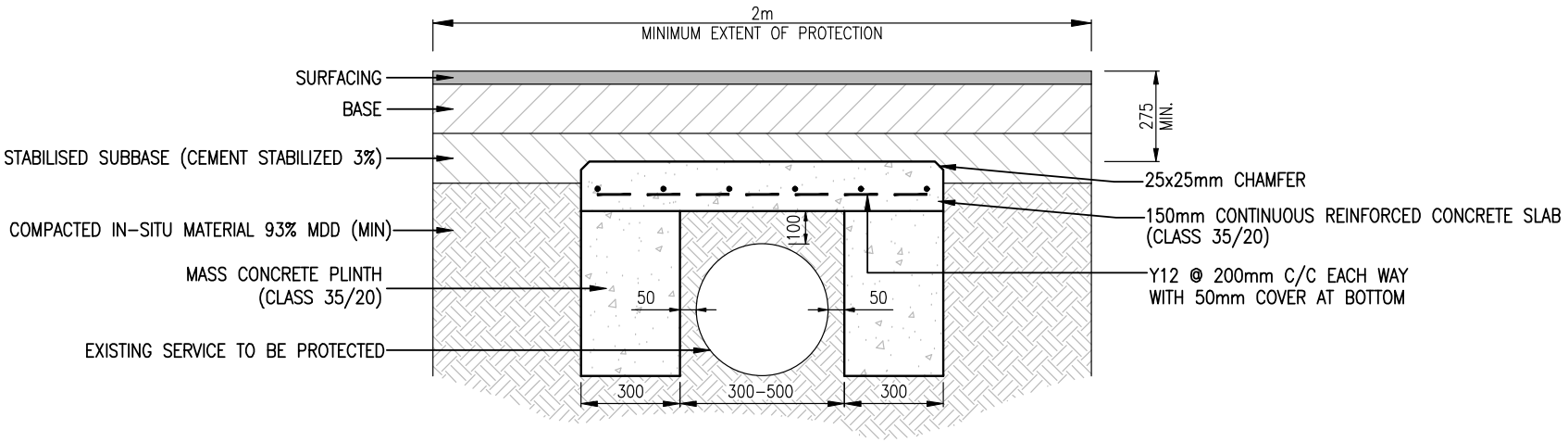

NOTES:

1. LOW TONNAGE ROLLER TO BE USED ON BASE AND SUBBASE LAYERS, IN ORDER TO PROTECT STRUCTURE.

CITY OF CAPE TOWN
ISIXEKO SASEKAPA
STAD KAAPSTAD

CITY OF CAPE TOWN
URBAN MOBILITY

TITLE

PROTECTION OF EXISTING SERVICES IN ROADWAY

STANDARDS AND GUIDELINES DETAILS

SCALE	PAPER
1:20	A4
DRAWING No.	REV
GE7	B

P:\CAD\R&SD\ITI_01 Design\T_1000B Standards\T_1000RS DESIGN_Roads and Stormwater\0002 Drawings_Version4.0\04 GE\GE7 – Protection of Service in Roadway_RevB.dwg

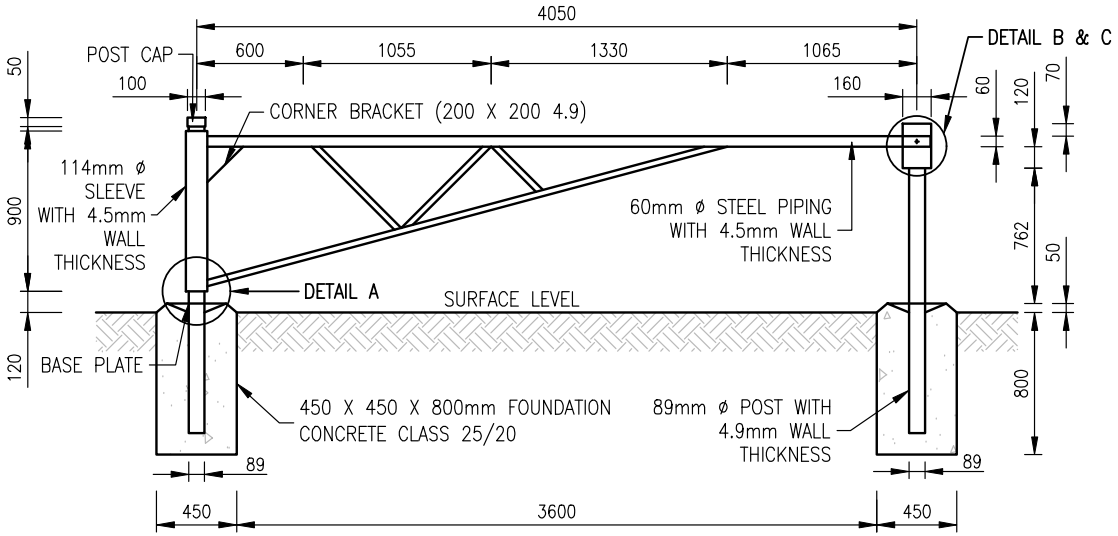

PLAN
SCALE 1:40

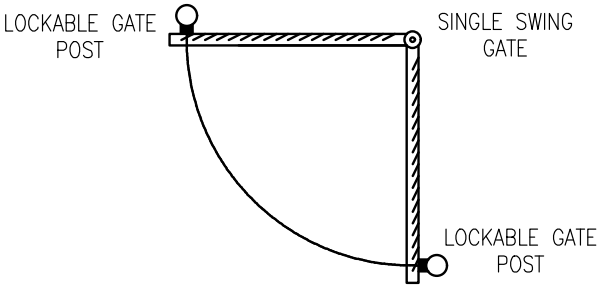

TOP VIEW
SCALE 1:30

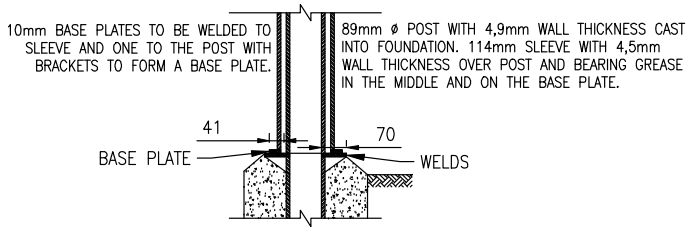

DETAIL A
SCALE 1:20

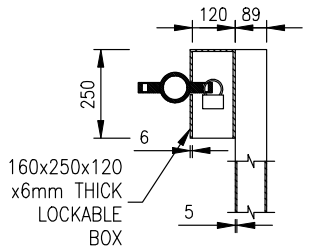

DETAIL B
SCALE 1:20

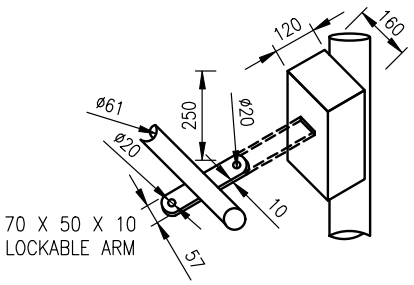

DETAIL C
SCALE 1:20

NOTES:

1. ALL STEEL TO BE HOT-DIP GALVANISED AFTER WELDING.
2. NO WELDING ALLOWED AFTER HOT-DIP GALVANISING.

CITY OF CAPE TOWN
ISIXEKO SASEKAPA
STAD KAAPSTAD

CITY OF CAPE TOWN
URBAN MOBILITY

TITLE

SWING GATE

STANDARDS AND GUIDELINES DETAILS

SCALE	PAPER
SHOWN	A4
DRAWING No.	REV
GE8	B

P:\CAD\R&SD\ITI_01 Design\T_1000B Standards\T_1000RS DESIGN_Roads and Stormwater\0002 Drawings_Version4.0\04 GE\GE8 – Swing Gate_RevB.dwg

THROUGH ROAD CLASS/TYPE	DIMENSIONS (M)	
	x	y
MAJOR RESIDENTIAL ACCESS LINK	2.4	45
RESIDENTIAL ACCESS LOOP/CUL-DE-SAC	2.4	35

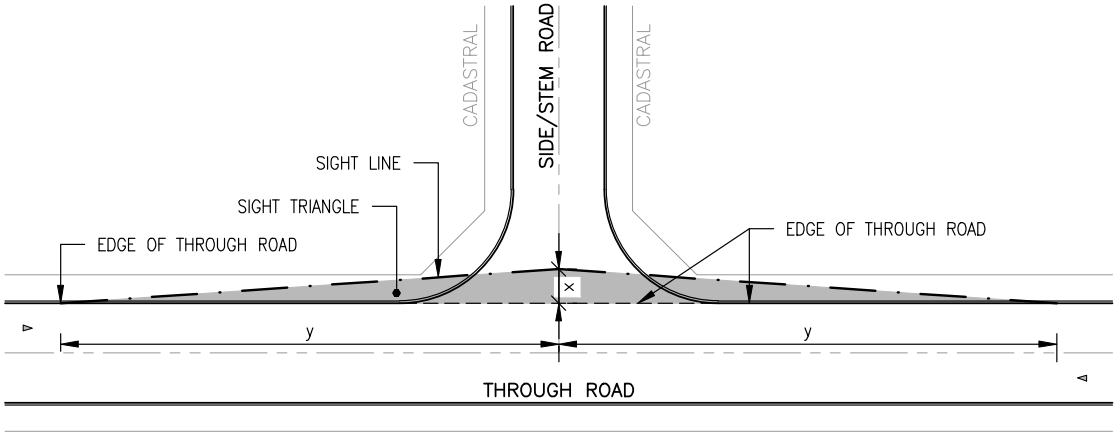

SIGHT TRIANGLES FOR URBAN LOCAL RESIDENTIAL STREETS (UTG7)

THROUGH ROAD CLASS/TYPE	YIELD CONTROL		STOP CONTROL	
	x	y	x	y
REGIONAL SHOPPING CENTRES/SINGLE SITE COMMERCIAL DEVELOPMENTS	9	55	2.4	45
INDUSTRIAL TOWNSHIPS/PARKS	9	90	4.5	90
OFFICE/SCIENCE PARKS	9	55	2.4	45
TRUCK PARKS/TRANSSHIPMENT CENTRES/WAREHOUSING	9	75	4.5	55
EXHIBITION CENTRES/THEME PARKS/SPORTS CENTRES AND STADIA	9	55	2.4	45
CENTRAL AND SUBURBAN/REGIONAL BUSINESS AREAS	9	55	2.4	45

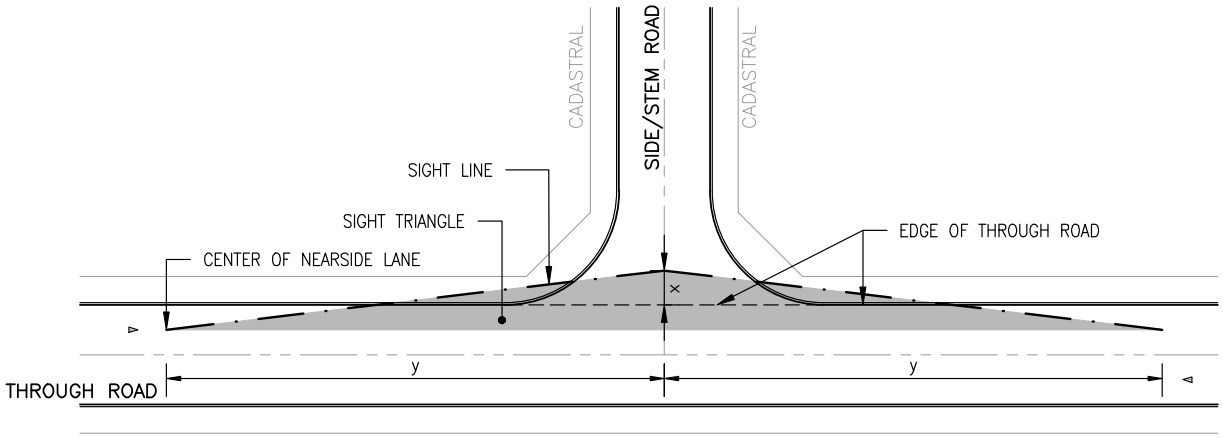

SIGHT TRIANGLES FOR INDUSTRIAL/COMMERCIAL DEVELOPMENTS (UTG10)

NOTES:

1. SIGHT TRIANGLES AND INFORMATION BASED ON THE REQUIREMENTS OF UTG7 AND UTG10.

CITY OF CAPE TOWN
ISIXEKO SASEKAPA
STAD KAAPSTAD

CITY OF CAPE TOWN
URBAN MOBILITY

TITLE

SIGHT TRIANGLES FOR LOWER & MIDDLE ORDER ROADS

STANDARDS AND GUIDELINES DETAILS

SCALE	PAPER
N.T.S.	A4
DRAWING No.	REV
GE9	A

P:\CAD\R&SD\TL_01 Design\T_1000B Standards\T_1000RS DESIGN_Roads and Stormwater\0002 Drawings_Version4.0\04 GE\GE9 - Sight Triangles on Lower Middel Order Roads_RevA.dwg

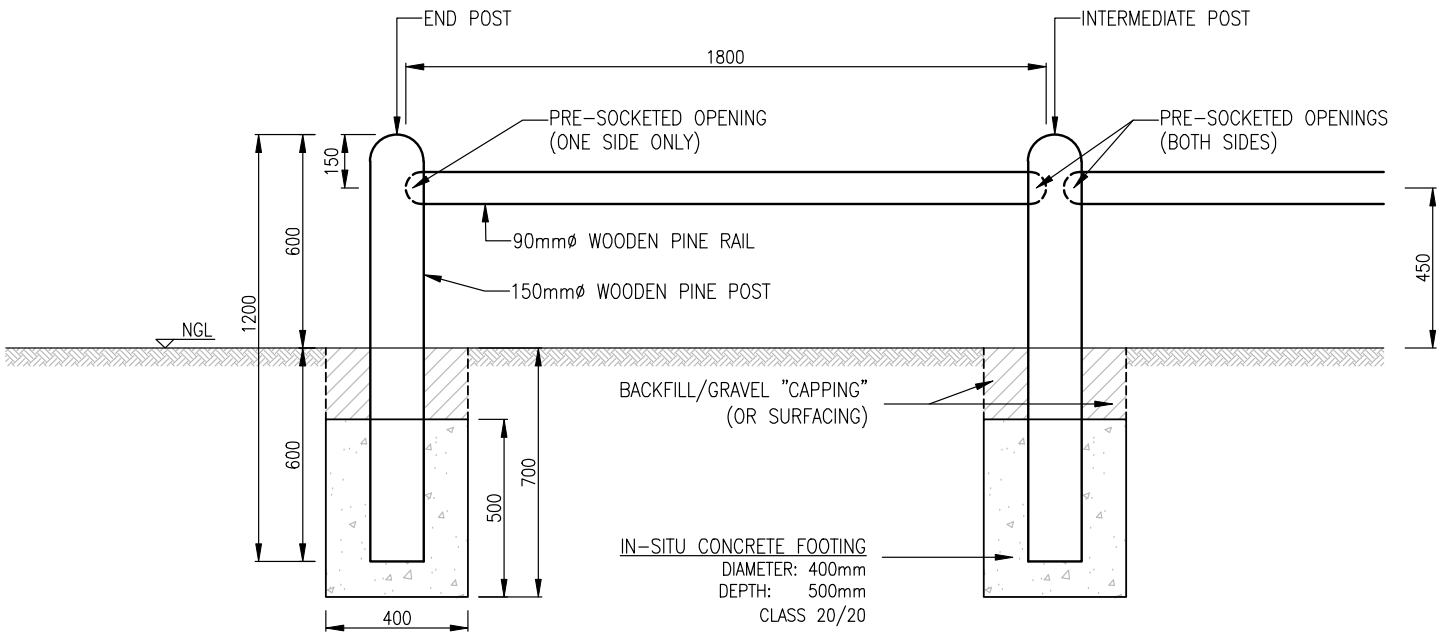

NOTES:

1. TIMBER POSTS:
   - 150mm DIAMETER LATHE TURNED AND TANALITH TREATED PINE, WITH A LENGTH OF AS SPECIFIED.
   - PRE–SOCKETED OPENINGS. END POST TO BE PRE–SOCKETED ON ONE SIDE ONLY.
   - PLANTED 600mm DEEP, REGARDLESS OF FENCE TYPE (i.e. SINGLE OR DOUBLE RAIL).
2. TIMBER RAIL:
   - 90mm DIAMETER LATHE TURNED AND TANALITH TREATED PINE, WITH A LENGTH OF 1.8m.

CITY OF CAPE TOWN
ISIXEKO SASEKAPA
STAD KAAPSTAD

CITY OF CAPE TOWN
URBAN MOBILITY

TITLE

TIMBER POST AND RAIL (RANCH) FENCING: SINGLE RAIL

STANDARDS AND GUIDELINES DETAILS

SCALE	PAPER
1:20	A4
DRAWING No.	REV
GE10.1	B

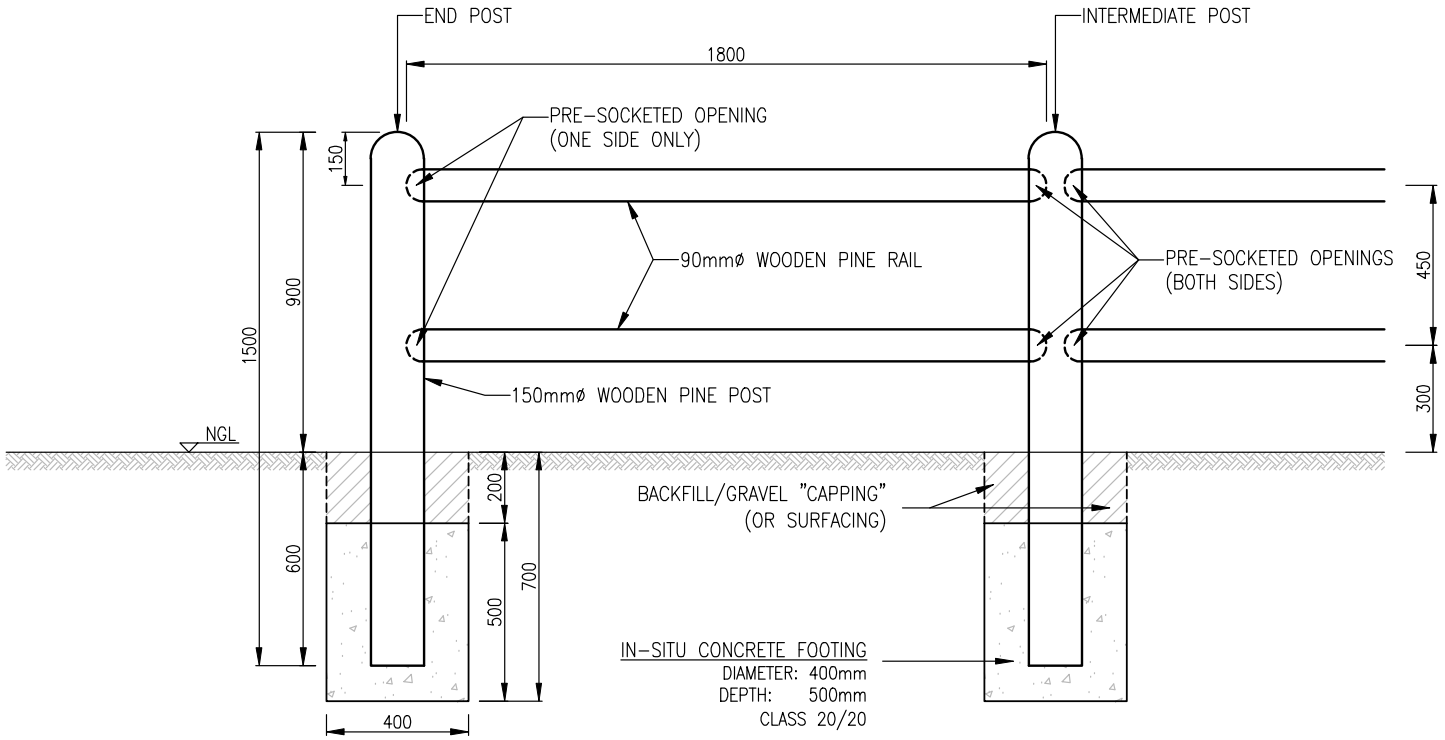

NOTES:

1. TIMBER POSTS:
   - 150mm DIAMETER LATHE TURNED AND TANALITH TREATED PINE, WITH A LENGTH OF AS SPECIFIED.
   - PRE–SOCKETED OPENINGS. END POST TO BE PRE–SOCKETED ON ONE SIDE ONLY.
   - PLANTED 600mm DEEP, REGARDLESS OF FENCE TYPE (i.e. SINGLE OR DOUBLE RAIL).
2. TIMBER RAIL:
   - 90mm DIAMETER LATHE TURNED AND TANALITH TREATED PINE, WITH A LENGTH OF 1.8m.

CITY OF CAPE TOWN
ISIXEKO SASEKAPA
STAD KAAPSTAD

CITY OF CAPE TOWN
URBAN MOBILITY

TITLE

TIMBER POST AND RAIL (RANCH) FENCING: DOUBLE RAIL

STANDARDS AND GUIDELINES DETAILS

SCALE	PAPER
1:20	A4
DRAWING No.	REV
GE10.2	B

P:\CAD\R&SD\ITI_01 Design\T_1000B Standards\T_1000RS DESIGN_Roads and Stormwater\0002 Drawings_Version4.0\04 GE\GE10.2 – Timber Post and Rail Fencing_RevB.dwg

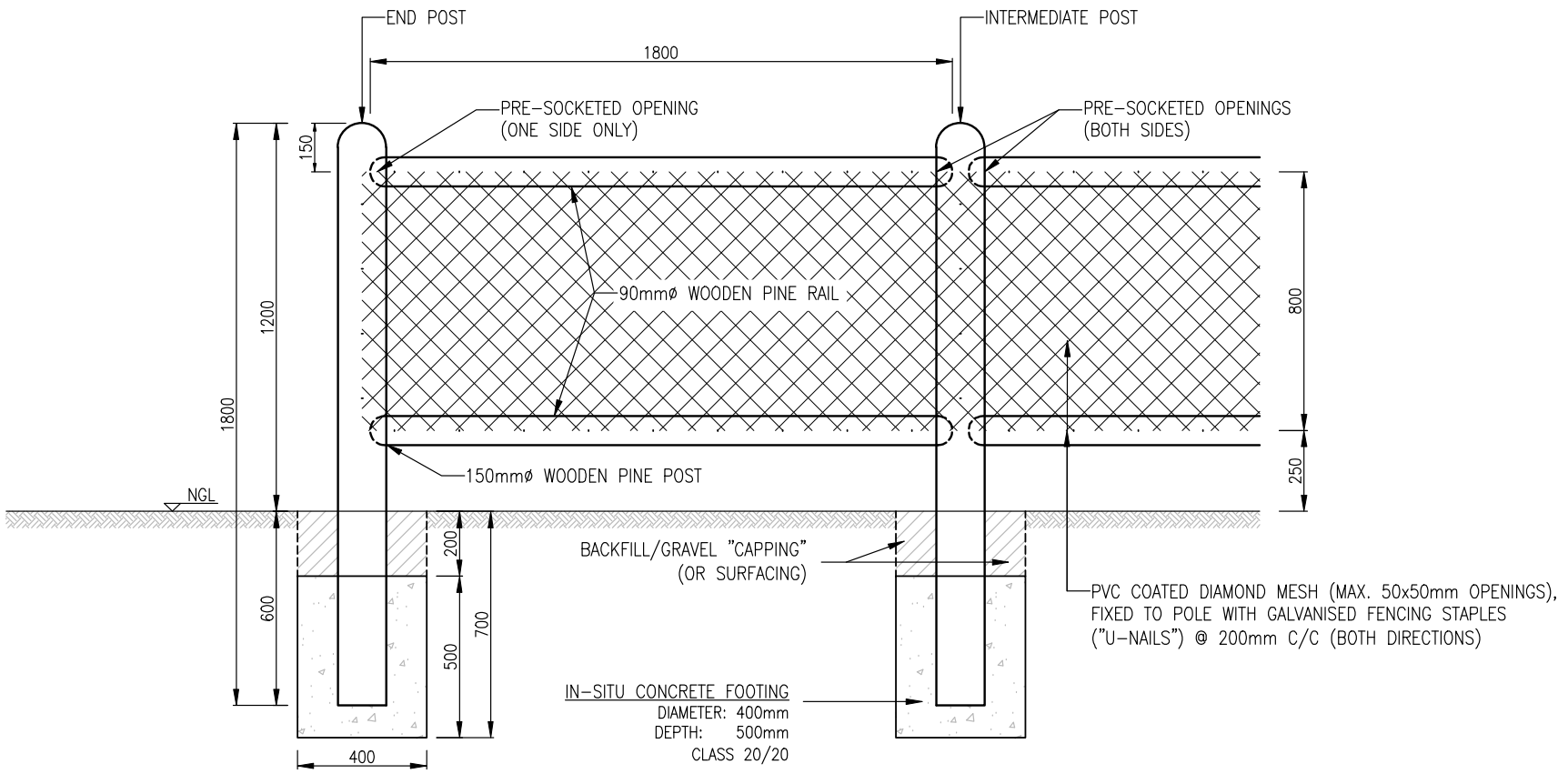

NOTES:

1. TIMBER POSTS:
   - 150mm DIAMETER LATHE TURNED AND TANALITH TREATED PINE, WITH A LENGTH OF AS SPECIFIED.
   - PRE-SOCKETED OPENINGS. END POST TO BE PRE-SOCKETED ON ONE SIDE ONLY.
   - PLANTED 600mm DEEP, REGARDLESS OF FENCE TYPE (i.e. SINGLE OR DOUBLE RAIL).
2. TIMBER RAIL:
   - 90mm DIAMETER LATHE TURNED AND TANALITH TREATED PINE, WITH A LENGTH OF 1.8m.

CITY OF CAPE TOWN
ISIXEKO SASEKAPA
STAD KAAPSTAD

CITY OF CAPE TOWN
URBAN MOBILITY

TITLE

TIMBER POST AND RAIL (RANCH) FENCING: DOUBLE RAIL WITH MESH PROTECTION

STANDARDS AND GUIDELINES DETAILS

SCALE	PAPER
1:20	A4
DRAWING No.	REV
GE10.3	B

P:\CAD\R&SD\ITI_01 Design\T_1000B Standards\T_1000RS DESIGN_Roads and Stormwater\0002 Drawings_Version4.0\04 GE\GE10.3 – Timber Post and Rail Fencing_RevB.dwg

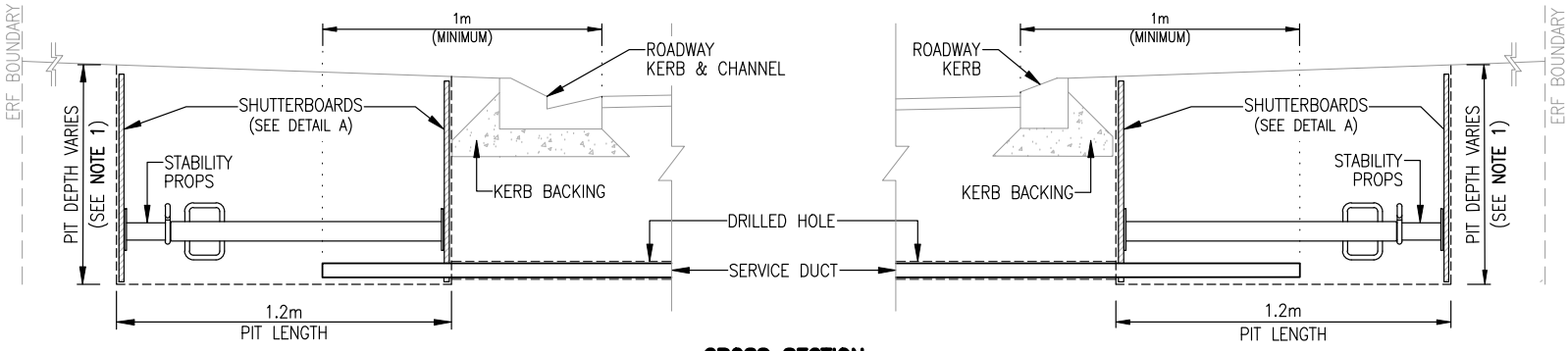

CROSS SECTION

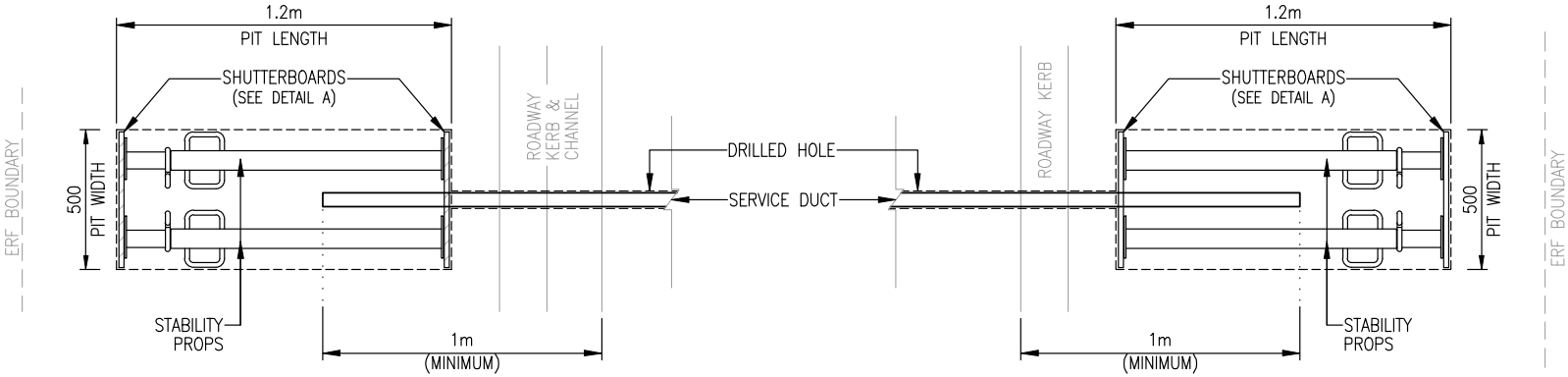

PLAN VIEW

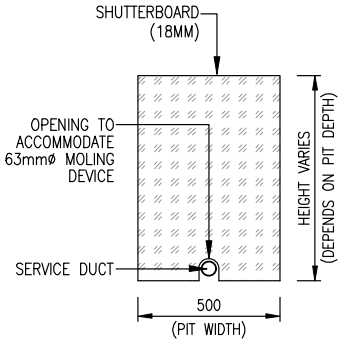

DETAIL A: SHUTTERBOARD

NOTES:

1. A PIT DEPTH OF 1m IS PREFERRED, WITH A MINIMUM DEPTH OF 600mm (PROVIDED THAT THE MOLING IS UNDERNEATH THE ROAD LAYER WORKS).

CITY OF CAPE TOWN
ISIXEKO SASEKAPA
STAD KAAPSTAD

CITY OF CAPE TOWN
URBAN MOBILITY

TITLE

PNEUMATIC HORIZONTAL BORING ("MOLING")

STANDARDS AND GUIDELINES DETAILS

SCALE	PAPER
1:25	A4
DRAWING No.	REV
GE11	A

P:\CAD\R&SD\ITI_01 Design\T_1000B Standards\T_1000RS DESIGN_Roads and Stormwater\0002 Drawings_Version4.0\04 GE\GE11 – Ducts Installation by Pneumatic Boring (Moling)_RevA.dwg

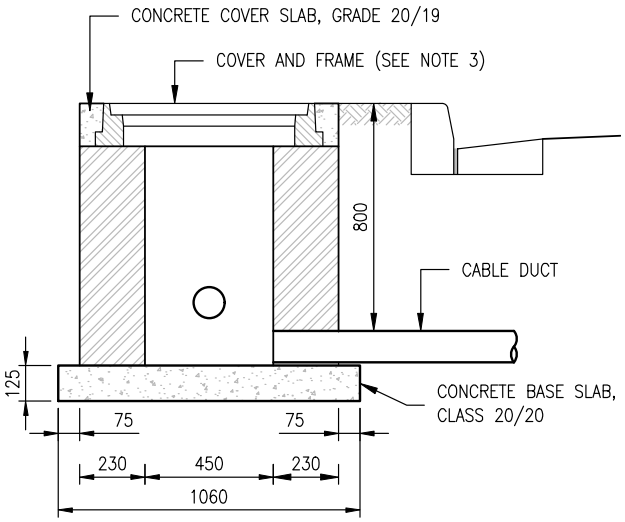

SECTION A–A

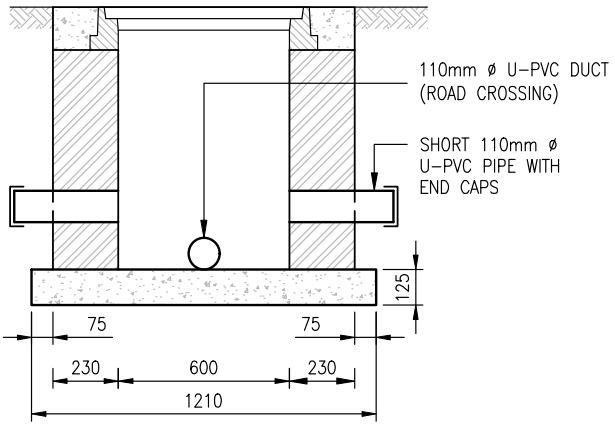

SECTION B–B

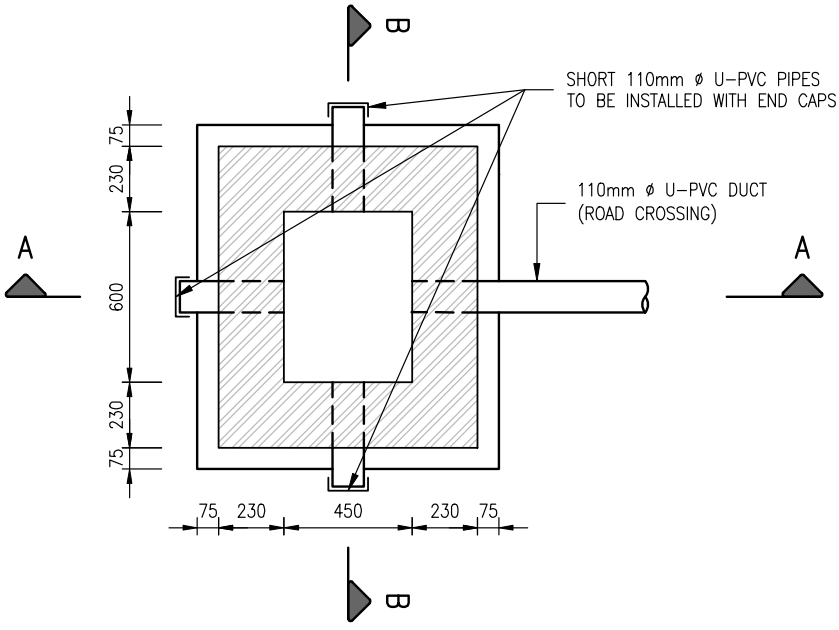

SECTIONAL PLAN VIEW

NGL: NATURAL GROUND LEVEL
FRL: FINISHED ROAD LEVEL
FSL: FINISHED SURFACE LEVEL

NOTES:

1. BRICKWORK: SEE SECTION 10.4.10 "SPECIFICATIONS FOR MASONRY UNITS".
2. MANHOLES ONLY ALLOWED ON FOOTWAYS AND VERGES (NOT IN ROADWAYS).
3. MANHOLE COVER AND FRAME SHALL BE AS PER THE REQUIREMENTS OF THE CITY'S TRAFFIC SIGNALS DEPARTMENT.

CITY OF CAPE TOWN
ISIXEKO SASEKAPA
STAD KAAPSTAD

CITY OF CAPE TOWN
URBAN MOBILITY

TITLE

CABLE INSPECTION MANHOLE FOR TRAFFIC SIGNAL SERVICES

STANDARDS AND GUIDELINES DETAILS

SCALE	PAPER
1:25	A4
DRAWING No.	REV
GE12	C

P:\CAD\R&SD\TT_01 Design\T_1000B Standards\T_1000RS DESIGN_Roads and Stormwater\0002 Drawings_Version4.0\04 GE\GE12 – Cable Inspection Manhole_RevC.dwg

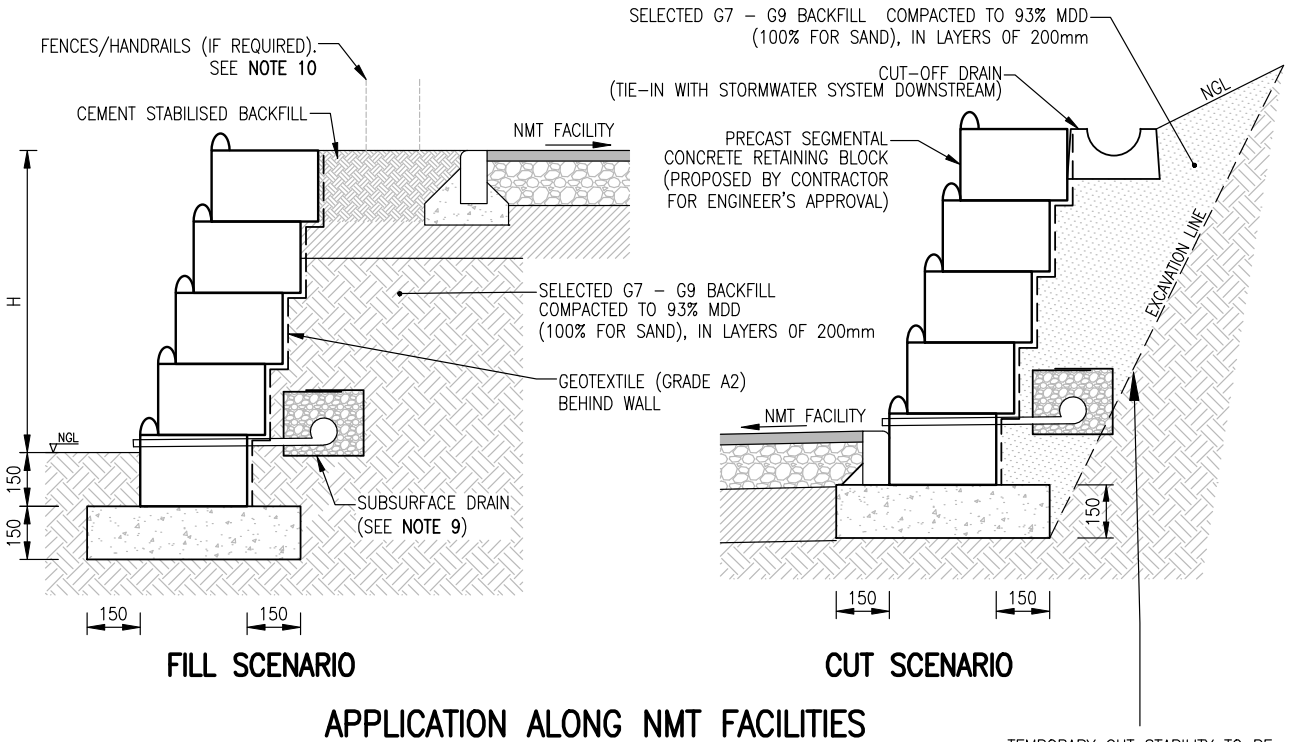

APPLICATION ALONG NMT FACILITIES

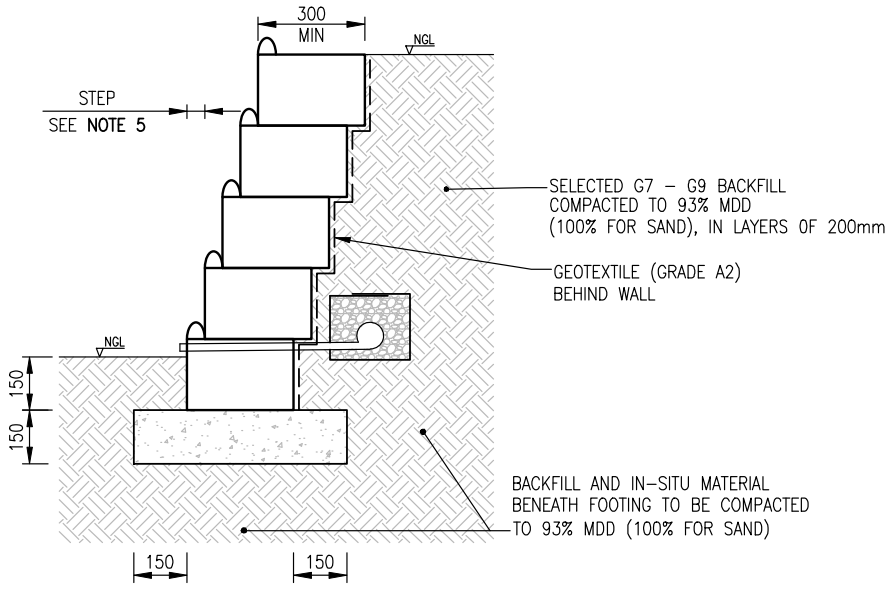

GENERAL APPLICATION

NGL: NATURAL GROUND LEVEL
FSL: FINISHED SURFACE LEVEL

NOTES:

1. THE ABOVE DETAILS SHOULD BE CONSIDERED TYPICAL. SPECIFICATIONS MAY DIFFER, SHOULD SITE SPECIFIC CONDITIONS REQUIRE IT.
2. ALL BLOCKS TO COMPLY TO SANS 508:2020.
3. THE BLOCK WALL SHOULD PREFERABLY HAVE A CLOSED FACE CONFIGURATION AND A SEGMENTAL BUILD-IN NIB. IF NO NIB IS PRESENT, GRANULAR STONE WILL BE USED AS INFILL TO ENSURE INTERLOCK.
4. THIS DETAIL SHALL ONLY BE APPLICABLE FOR BLOCK RETAINING STRUCTURES WITH A VERTICAL HEIGHT OF UP TO 800mm WITH VERTICAL CREST AND 400mm WITH CREST SLOPE.
5. FOR WALLS HIGHER THAN THOSE IN NOTE 4, THE WALLS SHALL BE DESIGNED BY A PROFESSIONAL ENGINEER. DESIGN BY SUPPLIER SHALL NOT BE PERMITTED BEFORE TENDER.
6. BLOCKS SHALL EITHER BE FILLED WITH CONCRETE OR SUITABLE GRANULAR MATERIAL. THE APPROVAL AUTHORITY TO PROVIDE GUIDANCE IN THIS REGARD.
7. FOOTING SHALL CONSIST OF A COMPACTED BASE (1 CEMENT : 2 SAND : 3 STONE), UNLESS ADVISED OTHERWISE.
8. HORIZONTAL STEP/SETBACK SHALL BE IN ACCORDANCE WITH THE MANUFACTURER'S SPECIFICATIONS, BUT SHOULD NEVER BE LESS THAN 50mm.
9. SUBSURFACE DRAIN: 75ø HDPE DOUBLE WALLED SLOTTED PIPE (SLOTS AT TOP), WITH 20ø WEEPHOLES @ 2m c/c. PIPE TO BE SURROUNDED WITH 13mm CRUSHED STONE, WRAPPED INSIDE A GEOTEXTILE (GRADE A2). FOR HIGHER GROUND WATER, SEE NCMA MANUAL FOR SEGMENTAL RETAINING WALLS. FOR WALLS LOWER THAN 400mm IN HEIGHT, SUBSURFACE DRAINS MAY BE OMITTED.
10. WHERE THE VERTICAL HEIGHT/DROP EXCEEDS 500mm, FENCES AND/OR HANDRAILS SHALL BE PROVIDED BEHIND THE EDGING, IN ORDER TO ENSURE PUBLIC SAFETY.

CITY OF CAPE TOWN
ISIXEKO SASEKAPA
STAD KAAPSTAD

CITY OF CAPE TOWN
URBAN MOBILITY

TITLE

SINGLE SEGMENTAL BLOCK RETAINING WALL ALONG NMT FACILITIES & GENERAL

STANDARDS AND GUIDELINES DETAILS

SCALE	PAPER
1:10	A4
DRAWING No.	REV
GE13.1	A

P:\CAD\R&SD\ITL_01 Design\T_1000B Standards\T_1000RS DESIGN_Roads and Stormwater\0002 Drawings_Version4.0\04 GE\GE13.1 – Block Retaining Wall RevA.dwg

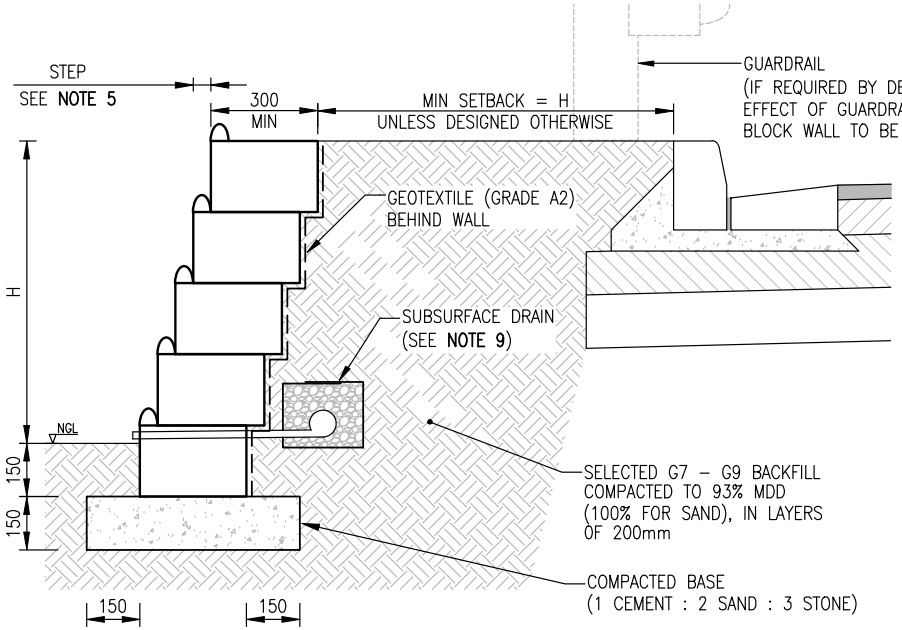

FILL SCENARIO

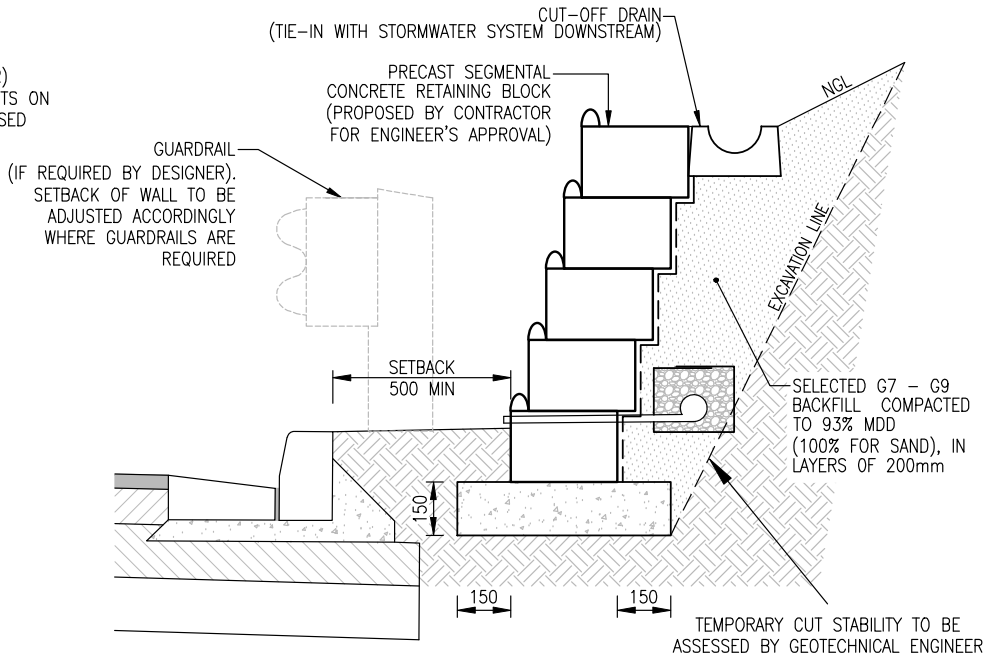

CUT SCENARIO
NOT PREFERRED

APPLICATION ALONG ROADWAYS
(NO NMT FACILITIES PRESENT)

NOTES:

1. THE ABOVE DETAILS SHOULD BE CONSIDERED TYPICAL. SPECIFICATIONS MAY DIFFER, SHOULD SITE SPECIFIC CONDITIONS REQUIRE IT.
2. ALL BLOCKS TO COMPLY TO SANS 508:2020.
3. THE BLOCK WALL SHOULD PREFERABLY HAVE A CLOSED FACE CONFIGURATION AND A SEGMENTAL BUILD–IN NIB. IF NO NIB IS PRESENT, GRANULAR STONE WILL BE USED AS INFILL TO ENSURE INTERLOCK.
4. THIS DETAIL SHALL ONLY BE APPLICABLE FOR BLOCK RETAINING STRUCTURES WITH A VERTICAL HEIGHT OF UP TO 800mm WITH VERTICAL CREST AND 400mm WITH CREST SLOPE.
5. FOR WALLS HIGHER THAN THOSE IN NOTE 4, THE WALLS SHALL BE DESIGNED BY A PROFESSIONAL ENGINEER. DESIGN BY SUPPLIER SHALL NOT BE PERMITTED BEFORE TENDER.
6. BLOCKS SHALL EITHER BE FILLED WITH CONCRETE OR SUITABLE GRANULAR MATERIAL. THE APPROVAL AUTHORITY TO PROVIDE GUIDANCE IN THIS REGARD.
7. FOOTING SHALL CONSIST OF A COMPACTED BASE (1 CEMENT : 2 SAND : 3 STONE), UNLESS ADVISED OTHERWISE.
8. HORIZONTAL STEP/SETBACK SHALL BE IN ACCORDANCE WITH THE MANUFACTURER'S SPECIFICATIONS, BUT SHOULD NEVER BE LESS THAN 50mm.
9. SUBSURFACE DRAIN: 75ø HDPE DOUBLE WALLED SLOTTED PIPE (SLOTS AT TOP), WITH 20ø WEEPHOLES @ 2m c/c. PIPE TO BE SURROUNDED WITH 13mm CRUSHED STONE, WRAPPED INSIDE A GEOTEXTILE (GRADE A2). FOR HIGHER GROUND WATER, SEE NCMA MANUAL FOR SEGMENTAL RETAINING WALLS. FOR WALLS LOWER THAN 400mm IN HEIGHT, SUBSURFACE DRAINS MAY BE OMITTED.

NGL: NATURAL GROUND LEVEL
FSL: FINISHED SURFACE LEVEL

CITY OF CAPE TOWN
ISIXEKO SASEKAPA
STAD KAAPSTAD

CITY OF CAPE TOWN
URBAN MOBILITY

TITLE

SINGLE SEGMENTAL BLOCK RETAINING WALL ALONG ROADWAYS

STANDARDS AND GUIDELINES DETAILS

SCALE	PAPER
1:10	A4
DRAWING No.	REV
GE13.2	A

P:\CAD\R&SD\ITI_01 Design\T_1000B Standards\T_1000RS DESIGN_Roads and Stormwater\0002 Drawings_Version4.0\04 GE\GE13.2 – Block Retaining Wall RevA.dwg

1 PROJECT ELECTRICAL GENERAL SPECIFICATIONS

REQUIREMENTS SPECIFIC TO MINIATURE SUBSTATIONS

1.1 General Construction

1.1.1 The miniature substations shall be suitable for outdoor use and shall be divided into three compartments, namely:

a) MV switch compartment
b) Transformer compartment
c) LV compartment

1.1.2 Miniature Substation Type A:

1.1.3 The design and construction of the Dyn11 Type A miniature substations shall be generally in accordance with the arrangement for a Type A unitary design substation as specified in SANS 1029, and shall comply with SANS 1029 where applicable. The miniature substations shall have a transverse mounted transformer and shall be dimensioned to fit on a Type AS concrete plinth. The width of the substation is to be kept to a minimum. The width of the LV compartment shall be approximately 900 mm.

1.1.4 The front side of the Type A miniature substation shall be deemed to be the side on the long axis that faces the road. Type A miniature substations shall have the LV compartment on the left hand side of the transformer (facing in the direction of the long axis) and the MV (RMU) compartment on the right hand side of the transformer when the miniature substation is viewed from the front side. The tap changer compartment and MV (RMU) compartment doors shall open to the front side and the LV compartment door shall be hinged such that it opens towards the rear of the miniature substation and provide unobstructed egress towards the front.

1.1.5 The miniature substations shall be manufactured from materials as detailed below with the following minimum thicknesses:

Channel Underbase	-	6 mm hot dip galvanised mild steel
Transformer Bottom	-	4.5 mm 3CR12 stainless steel
Transformer Tank	-	4.5 mm 3CR12 stainless steel
Tank Cover	-	4.5 mm 3CR12 stainless steel
Radiator Tubes	-	1,6 mm hot dip galvanised mild steel
Walls and Roof	-	2 mm 3CR12 stainless steel
Doors	-	3 mm 3CR12 stainless steel

1.1.6 Stainless steel radiator tubes will be accepted, and are preferred provided that such designs have been completed and type tested, are of equivalent mechanical performance and are cost effective.

1.1.7 All component materials shall be identified on the miniature substation rating plate in an approved manner.

1.2 Miniature Substation Roofing and Walls

1.2.1 The roof and walls shall be of a single unitary construction. The roof shall have a distinct double slope to shed water.

1.2.2 The roof shall be secured in place in such a way as to ensure that the internal arc rating of the miniature substation is maintained at all times during service. Where possible the miniature substation shall be transported with the roof fitted and secured, and removal on site for inspections, maintenance or other routine activities shall not be necessary.

1.2.3 Where removal of the miniature substation roof cannot be avoided during lifting and installation of the miniature substation on site the manufacturer shall ensure that the design provisions facilitate the easy and reliable refitting of the roof by field staff to the required standard to ensure that the equipment performs to the specified IAC classification in the event of an internal fault. The Tenderer shall provide a thorough Work Method Statement document detailing the step-by-step requirements for refitting the roof, including fastener details and positions, torque settings and recommended tests to verify correct re-assembly.

1.2.4 Lifting lugs shall be provided and shall be positioned so that the entire miniature substation can be safely slung and transported without distortion of the miniature substation enclosure or frame and preferably without the necessity of removing the roof

1.2.5 The internal equipment shall be protected against the ingress of water and shall be vermin proof.

1.2.6 Ventilation openings shall be provided in the roof, to prevent condensation.

1.2.7 The overhanging edge of the roof shall be folded back towards the housing on all sides.

1.3 Miniature Substation Doors

1.3.1 All openings on the miniature substation for access shall be equipped with lockable hinged doors. The doors shall be equipped with hinges that shall be internally mounted.

1.3.2 Doors shall be indelibly marked, in red, MV/S and LV/S as applicable, on the insides.

1.3.3 A rigid document holder suitable for A4 sized documentation shall be provided and fitted to the inside of the right hand side MV compartment door.

1.4 Miniature Substation Base Construction

1.4.1 The miniature substation housing shall be erected on a U-section steel frame with measurements of not less than 75 mm x 70 mm. The U-section shall be hot dip galvanised and painted with two coats black bitumen paint. It shall be rigid, robust and completely self-supporting.

1.4.2 Facilities shall be provided for bolting of the miniature substation underbase to a concrete plinth utilising holding-down set screws as necessary in order to provide for a safe installation and to comply with the miniature substation internal arc classification.

1.4.3 Flanges that are provided for the fitting of holding-down set screws shall be of a minimum of 5 mm thick steel or alternatively be reinforced to prevent bending during transportation, handling and installation.

1.5 Earthing

1.5.1 Earth terminals, (M12 x 50 mm minimum) shall be welded to the transformer tank and shall be accessible from the MV and LV compartments.

1.5.2 The ring main unit and miniature substation base shall be securely bonded to these earth terminals in the MV compartment.

1.5.3 Copper bonding conductors shall have a minimum cross sectional area of 70 mm².

1.5.4 Two stainless steel nuts and washers shall be provided on each earth terminal.

1.5.5 Each compartment shall be provided with an earthing terminal that complies with the relevant requirements of SANS 1029.

1.5.6 All earthing conductors shall be painted to assist with the prevention of vandalism.

1.6 MV Shunt Tripping

1.6.1 The miniature substation transformer shall be fitted with a top-oil thermoelectric temperature sensing element, a thermostat and auxiliary wiring and fittings necessary for shunt tripping of the RMU switch-fuse disconnector in the event of a transformer over-temperature.

1.6.2 The thermostat shall be factory set to shunt trip the RMU when the transformer top-oil temperature exceeds 90°C.

1.6.3 The thermostat shall be housed in an enclosure fitted with a transparent front cover in order to view the temperature setting of the thermostat. The enclosure shall be sealed with a stainless steel wire and crimped tinned copper ferrule to prevent changes to the thermostat set point.

1.6.4 The shunt tripping installation shall provide over-temperature trip indication to indicate when the thermostat has operated and issued an over-temperature trip signal.

1.6.5 The over-temperature trip indication shall take the form of a manually resettable latching mechanical flag, which shall either be an integral feature of the thermostat or shall be achieved using a suitable auxiliary relay. The flag shall be clearly labelled as specified, and shall be clearly visible when the LV compartment door is open.

1.6.6 In the event that the trip indication is achieved utilising an auxiliary relay, such relay shall be housed adjacent to the thermostat.

1.6.7 The shunt trip facility shall be supplied from the transformer LV busbars and shall be fitted with a suitably rated HRC fuse-link and a neutral link.

1.6.8 The thermostat and over-temperature trip indication shall be housed in the transformer LV compartment unless otherwise approved by the Engineer.

1.6.9 The positioning of the thermostat and over-temperature trip indication equipment shall be such that it complies with all specified electrical clearances and in addition does not obstruct access for installation, maintenance or operation of other equipment in the LV compartment. In the case of Type A miniature substations the location of the thermostat and over-temperature trip indication equipment shall be best positioned to view and maintain.

1.7 MV Compartment

1.7.1 The compartment shall contain a ring main unit as specified.

1.7.2 MV bushings on the transformer shall be Type A bushings in accordance with EN 50180, and shall comply with the requirements of SANS 60137.

1.7.3 The bushings shall be tested in accordance with the requirements of SANS 60137, including routine partial discharge testing.

1.7.4 The surface of the bushings shall be smooth and free from any blemishes, patches or fillings.

1.7.5 The bushings shall be made from insulating material to the approval of the Engineer. DMC bushings are not acceptable.

1.7.6 All dimensions, clearances and creepage paths for the transformer MV bushings shall comply with the requirements of SANS 876 for 12 kV Type 1 unshrouded cable terminations.

1.7.7 The connections between the ring main unit and the transformer shall be made directly by means of single core 35 mm² copper conductor screened XLPE insulated 11 kV trailing cables, which should be as short as possible. The use of unscreened cable is not acceptable.

1.7.8 The termination of the single core screened 11 kV trailing cables shall be to approval. The screening shall be earthed at the RMU end only.

1.7.9 The terminations shall be appropriate for the screened single core trailing cable, shall provide appropriate proven stress relief and shall have no sharp projections.

1.7.10 The termination of the trailing cables on the Type A bushings of the transformer shall be shrouded with Raychem Type RCAB, or equivalent to approval, push-on unscreened insulated bushing boots, rated at 17,5 kV and 95 kV BIL. These insulating boots shall be installed in accordance with the manufacturer's Installation Instructions.

1.7.11 The termination of the trailing cables on the Type A bushings of the ring main unit switch-fuse combination tee-off shall be fitted with Raychem Type RSTI screened separable connectors (SSCs), or equivalent to approval, rated at 95 kV BIL. These SSCs shall be installed in accordance with the manufacturer's Installation Instructions.

1.7.12 Phase colour indication, RWB (Dyn11) or BWR (Dyn7), shall be positioned above the mini substation transformer MV bushings.

1.7.13 Approved removable barriers and shrouding shall be installed to prevent access by the operator to the MV connections.

1.8 Transformer Compartment

1.8.1 The transformer compartment of each miniature substation shall contain a sealed distribution transformer complying with the requirements of SANS 780 and this specification.

1.9 Tap Changer Compartment and Door

1.9.1 The tap changer compartment and door for miniature substations with externally mounted tap changers shall be fabricated from 3CR12 stainless steel of minimum thickness 3 mm.

1.9.2 The tap changer box shall be fitted with recessed lockable door with concealed hinges or a cover that provides an appropriate level of vandalism resistance. Locking facilities shall be suitable for padlocks or shall be fitted with integral locks keyed to the Employer's standardised locking hierarchy, and shall be to the approval of the Engineer. Padlocks shall be protected against vandalism.

1.9.3 The locking facilities shall be backed up by an auxiliary Allen bolt based securing system.

1.10 LV Compartment - Type A Miniature substations

1.10.1 Type A Miniature substations - Switch Box and Fittings

1.10.1.1 A switch compartment shall be fitted to each Type A miniature substation on the LV side. The LV switch compartment shall consist of a single module with a width of approximately 900 mm. The switch compartment shall be equipped with phase busbars, neutral bar, earth bar, thermometer pocket, thermostat, over-temperature trip indication, ammeters and other fittings as detailed.

1.10.1.2 Each miniature substation shall be provided with three combined instantaneous indicating and 15 minute maximum demand flush mounted 96 mm (square) ammeters (one per phase), complete with single ratio current transformers.

1.10.1.3 The mounting of the current transformers shall not encroach on the minimum clearance required in terms of SANS 60439-1.

1.10.1.4 An approved 13 A square pin switched socket outlet (SSO) and a pair of 15 A terminals protected by type "NS" HRC 20 A and 4 A fuse links, respectively, shall be provided in each LV switch compartment.

1.10.1.5 The "NS" HRC 4 A fused link shall be used as the connection to supply the resetting voltage for the earth fault indicator equipment.

1.10.1.6 The supply to the fuse links for the SSO, 15A terminals and shunt tripping installation shall be by means of approved insulated copper conductors securely supported below busbar level.

1.10.1.7 Means shall be provided for carrying vermin proof earth fault indicator leads from the MV compartment to the LV compartment in an approved manner.

1.10.1.8 Hardboard barriers shall be provided and installed to close the bottom of the LV compartment to reduce the occurrence of condensation in the compartment during storage and prior to commissioning of the miniature substations.

1.10.2 Type A Miniature substations - Bushings, Busbars and Connections

1.10.2.1 All LV bushings shall be of porcelain or other insulating material to the approval of the Engineer. DMC components or similar will not be accepted.

1.10.2.2 All busbars, neutral bar and earth bar shall be made of hard-drawn copper, tinned, colour coded and be so dimensioned that at full load the current density shall not exceed 1,8 A/mm².

1.10.2.3 The rated short-time current withstand level (1 s) of the LV busbars shall be 25kA for mini-subs up to 800 kVA.

1.10.2.4 The neutral bar shall have the same cross-sectional area as the phase busbars.

1.10.2.5 The earth bar dimensions and the phase and neutral busbar lengths shall be as detailed.

1.10.2.6 The connection between the transformer LV bushings and the busbars shall be as detailed. These connections shall be solid copper conductors or flexible copper conductors to approval and so designed that the circuit breakers may be independently removed for replacement.

1.10.2.7 The connections between the transformer LV bushings and the busbars and the connections of the bushing flags onto the spindles shall be fitted with locknuts at each connection point.

1.10.2.8 Phase busbars shall be pre-drilled with 12,5 mm holes suitably positioned for connections to either 3 x large frame MCCB's or 5 x J25S or equivalent MCCB's.

1.10.2.9 The neutral bar and earth bar shall have a minimum of eight predrilled 12,5 mm connection holes as detailed.

1.10.2.10 All pre-drilled connection holes on phase busbars, neutral bar and earth bar shall be fitted with M12 stainless steel bolts, nuts and washers.

1.10.2.11 The neutral bar shall be mounted on black nylon stand-off insulators. The insulators shall be rated to withstand a working voltage of 600 V under normal and damp conditions, and shall be rated to withstand a high voltage test of 2 kV for 5 minutes.

1.10.2.12 The neutral and earth bars shall be mounted using stainless steel torque shear bolts.

1.10.2.13 The neutral bar shall be connected to the earth bar with a removable solid copper earth strap as detailed.

1.10.2.14 Phase colour indication, r w b n, shall be positioned above the LV bushings.

1.10.2.15 All external earth connections on the units shall be of copper. Aluminium conductors are not an acceptable alternative.

1.10.3 Type A Miniature substations - MCCB's and MCCB Backing Plate

1.10.3.1 The moulded case circuit breakers will be provided and fitted by others.

1.10.3.2 The miniature substations shall be fitted by the manufacturer with a 3CR12 corrosion resistant steel backing plate for subsequent mounting of the moulded case circuit

breakers.

1.10.3.3 The MCCB backing plate shall be pre-drilled for the fitting of 3 x moulded case circuit breakers of rating 400 A, 600A or 800A arranged as detailed and for an alternative fitment of 5 x J25S MCCB's of rating up to 250A.

1.10.3.4 The backing plate shall be well positioned. The backing plate (and accordingly the MCCBs) shall be positioned relative to the busbars such that the required separations from earthed and live busbars and conductive parts and minimum arc venting spaces specified by the MCCB manufacturers are maintained. MCCB's currently utilized are the CBi Hy-Mag L40B, J25S and M35B types.

1.10.4 Type A Miniature substations - MCCB and LV Busbar Barrier Boards

1.10.4.1 A barrier board, to approval, shall be provided to shield the busbars, the connectors to the MCCB's and the MCCB incoming terminals to prevent inadvertent contact.

1.10.4.2 A further, separate barrier board, to approval, shall be provided to shield the MCCB outgoing terminals to prevent inadvertent contact.

1.10.4.3 Barrier boards shall be so positioned that the access to the operating toggles of the moulded case circuit breakers is not inhibited in any way, and such that these toggles can be operated safely.

1.10.5 Type A Miniature substations - LV Cable Clamping

1.10.5.1 The LV compartment shall be provided with a hot dipped galvanised unistrut and suitable K-clamps to secure a maximum of five 4-core cables ranging in size between 120 mm² and 300 mm². The minimum distance between the outgoing terminal droppers of the moulded-case circuit breakers and the bottom unistrut shall be 530 mm.

1.10.6 Type A Miniature substations - LV Metering

1.10.6.1 LV metering and LV switch compartment door meter windows are not required for the Type A miniature substations.

RING MAIN UNITS

1.11 Terminology

"Ring Main Unit" shall mean a metal-enclosed non-withdrawable switchgear assembly with an external metal enclosure and comprising two non-automatic ring main switch disconnectors and a switch-fuse combination tee-off connected in series by a non-extensible common busbar.

1.12 Ratings

1.12.1 Rated Voltage

1.12.2 The rated voltage of the ring main units shall be 12 kV.

1.12.3 Rated Insulation Level

1.12.3.1 The rated peak lightning impulse peak withstand voltage shall be 95 kV and the rated short duration power frequency withstand voltage 28 kV.

1.12.4 Rated Normal Current

1.12.5 The rated normal current of the ring main switch disconnectors shall be 630 A.

1.12.6 The rated normal current of the switch-fuse combination tee-off shall be 200 A.

1.12.7 The rated normal current of the busbars shall be the same as the ring main switch disconnectors.

1.12.8 Rated Short-time and Peak Withstand Current

1.12.9 The rated short time withstand rms current shall be 20 kA for 3 seconds, and the rated peak withstand current shall be 50 kA.

1.12.10 Rated Breaking Current and Short Circuit Breaking Current

1.12.11 The rated breaking current of the ring main switch-disconnectors shall be in accordance with the requirements of SANS 1874.

1.12.12 The rated breaking current of the switch of the switch-fuse combination modules shall be 200 A, in accordance with SANS 62271-105.

1.12.13 The rated short circuit breaking current of the switch-fuse combination tee-off shall be 20 kA.

1.12.14 Rated Short Circuit Making Current

1.12.15 The rated short circuit making current of the ring main switch disconnectors, switch-fuse combination tee-off and earthing switches shall be 50 kA.

1.13 Internal Arc Classification

1.13.1 The ring main units shall have a minimum internal arc classification of IAC AFL 20 kA 0,5 s, in accordance with the requirements of SANS 62271-200.

1.13.2 The internal arc classification of the completed MV compartment of the miniature substation shall comply with the requirements of Section 5.3 of this specification.

1.14 General Requirements

1.14.1 Design and Construction of Switchgear

1.14.1.1 The ring main units shall comply with the requirements of SANS 1874 and SANS 62271-200 and shall be of fixed pattern design.

1.14.1.2 All primary components of the equipment shall be made and assembled by the same Manufacturer.

1.14.1.3 Only units with proven service history shall be considered.

1.14.1.4 All switching devices shall be operable from the front of the ring main unit.

1.14.1.5 The ring main units shall be provided with lifting eyes with a minimum diameter of 30 mm for lifting or slinging.

1.14.2 Insulating/Interrupting Medium

1.14.2.1 The ring main units shall be SF6 insulated.

1.14.2.2 Only new SF6 gas complying with the requirements of IEC 60376 shall be used.

1.14.2.3 The ring main unit gas-insulated switch compartment shall be factory sealed for life for a minimum maintenance-free lifespan of 30 years.

1.14.2.4 The ring main units shall not require routine gas replenishment during normal service.

1.14.2.5 The manufacturer of the ring main units shall provide full details of the programme for safe recovery of SF6 gas after their service life and shall provide full details of the SF6 gas recovery programme.

1.14.2.6 The cartridge fuses on switch-fuse combination modules shall be air insulated.

1.14.2.7 The interrupting medium for the switch disconnectors and switch fuse combination disconnectors shall be SF6 gas or vacuum, and shall be detailed in the Returnable Schedules.

1.14.3 Monitoring Facility for Insulating Medium

1.14.3.1 An SF6 gas pressure monitoring gauge shall be provided to indicate safe and unsafe gas pressure and shall be visible from the front panel.

1.14.4 Degree of Protection

1.14.4.1 The degree of protection of all accessible enclosures and compartments of the ring main units shall be a minimum of IP 4X, in accordance with SANS 60529, applicable when all doors are closed.

1.14.5 Accessibility of Compartments

1.14.5.1 The ring main unit gas-insulated switch compartment shall be a non-accessible compartment in accordance with SANS 62271-200.

1.14.5.2 The ring main unit air-insulated fuse compartment shall be an interlock-controlled accessible compartment in accordance with SANS 62271-200.

1.14.5.3 The ring main unit cable termination boxes shall be interlock-controlled accessible compartments in accordance with SANS 62271-200.

1.14.5.4 The ring main unit cable test facility compartments, where applicable, shall be interlock-controlled accessible compartments in accordance with SANS 62271-200.

1.14.6 Partition Class

1.14.6.1 The ring main units shall be of Partition Class PM in accordance with SANS 62271-200, with earthed metallic partitions between live compartments.

1.14.7 Service Continuity Category

1.14.7.1 The ring main units shall be Loss of Service Continuity (LSC) category LSC1 in accordance with SANS 62271-200.

1.14.8 Cable Test Facilities

1.14.8.1 Integral cable test facilities that do not require access to the cable boxes or removal of the separable connectors of the cable termination shall be provided on the switch disconnector modules for the application of test voltages to the associated circuit of up to 19 kV DC or 13 kV AC to earth.

1.14.8.2 Where provided for by the particular switchgear design, integral cable test facilities that do not require access to the cable boxes or removal of the separable connectors of the cable termination shall also be provided on the switch-fuse combination tee-off modules.

1.14.8.3 The cable test facilities shall not require the use of any loose test plugs or prods and shall be directly accessible from the front of the ring main unit.

1.14.8.4 Top mounted test facilities requiring the operator to lean into the miniature substation MV compartment shall not be acceptable.

1.14.8.5 Access to cable test facilities shall be interlock-controlled to ensure that the test facilities shall only be accessible when the associated earth switch is in the EARTH position, and the cable test facility access shall be capable of being padlocked.

1.14.8.6 The internal arc classification of the ring main unit pertaining to other live compartments shall be maintained while the cable test facilities on any particular switch module are accessed.

1.14.8.7 Phase colours and warning notices shall be permanently marked on test terminals, to approval.

1.14.9 Cable Earthing Facilities

1.14.9.1 Each ring main switch disconnectors and switch-fuse combination tee-off shall be fitted with an integral cable earthing switch that complies with the requirements of SANS 62271-102 and SANS 62271-200.

1.14.9.2 Cable earthing facilities which require the use of loose equipment or attachments shall not be acceptable.

1.14.9.3 Earthing facilities on the switch-fuse combination modules shall earth both sides of the fuse link.

1.14.10 Cable Live Indication

1.14.10.1 A three phase voltage detection system (VDS) suitable for the detection and indication of presence and absence of operating voltage and complying with the requirements of SANS 61243-5 shall be provided on each switching device on the ring main units. Single phase VIS modules shall not be acceptable.

1.14.10.2 The VDS system shall provide permanent VDS indication and shall provide for electrical phasing between modules on the ring main units through the use of universal phase comparators (UPCs).

1.14.10.3 All capacitive dividers utilised for live circuit indication shall have been type tested, shall have proven in-service performance history in harsh coastal environments, and shall be individually tested for partial discharge in accordance with the requirements of SANS 60270.

1.14.11 Mechanism Locking Facilities

1.14.11.1 Each ring main switch disconnector and switch-fuse combination tee-off shall be

padlockable in the ON position, the OFF position and the EARTH position in accordance with SANS 1874.

1.14.11.2 Each push button for operation of the ring main unit (eg. Trip / close push buttons on switch-fuse combination tee-off) shall be fitted with a padlockable metal cover to prevent unauthorised operation.

1.14.11.3 The operating control locking facilities shall be designed to be locked with mini-padlocks with 4 mm shackles.

1.14.12 General Interlocks

1.14.12.1 Positive mechanical interlocking shall be provided on the ring main units operating mechanisms, fuse compartment access and cable compartment covers in accordance with the requirements of SANS 1874.

1.14.13 Covers and Doors

1.14.13.1 All standard covers and doors provided for in the design of the ring main unit shall be included irrespective of the ring main unit being housed within a miniature substation MV compartment. For inspection purposes any weather covers shall be held in the open position by means of a mechanical device. All details to be provided to the approval of the Engineer.

1.14.14 RMU Rating Plate

1.14.14.1 The ring main unit shall be fitted with a rating plate complying with the requirements of SANS 1874.

1.14.15 Marking and Labelling

1.14.15.1 The ring main units shall have markings and labelling as specified in SANS 1874.

1.14.15.2 Single line operating diagrams shall be clearly marked on the front panel of the units.

1.14.15.3 All apparatus and interlocks shall be clearly labelled indicating their purpose, function and operating procedure.

1.14.15.4 All main circuit bushings and test contacts shall be legibly and indelibly marked with the appropriate phase designation assigned to that terminal. The markings shall be one of L1, L2 or L3, as appropriate.

1.14.15.5 The material, method of printing and method of fixing of all labels shall be to the approval of the Engineer. Mechanical methods of fixing are preferred.

1.14.16 Paper stick-on labels shall not be acceptable.

1.14.16.1 Circuit label material provided for the units shall be of the sandwich board type with black lettering on a white background. The labels shall be left blank for engraving by the Employer.

1.14.17 Earthing

1.14.17.1 The ring main units shall be provided with earth connection terminals and tinned copper earth bars complying with the requirements of SANS 1874.

1.14.17.2 The earth connection terminal for each metal enclosure and the main tank shall be suitable for the maximum earth fault current specified in Clause 3 of the specification, and shall be of size M12.

1.14.17.3 Two stainless steel nuts and washers shall be provided on each earth connection terminal.

1.14.17.4 All earth bars shall be bonded together providing electrical continuity. All bonding conductors used to interconnect the separate earth bars shall be copper and have a cross sectional area not less than that of the ring main unit earth bar.

1.14.17.5 A minimum of 4 holes diameter suitable for an M12 bolt shall be provided in the earth bar for earth connections.

1.14.17.6 Any earth bars external to the cable termination compartments shall be shrouded or covered in an approved manner to remove them from view and inhibit unauthorised access so to minimise the possibility of theft.

1.14.18 Painting and Protection against Corrosion

1.14.18.1 The ring main unit shall be painted and protected against corrosion in accordance with the requirements of SANS 1874.

1.14.18.2 The ring main unit gas-insulated switch compartment shall be constructed from stainless steel.

1.14.18.3 All other sheet steel work shall comprise an approved corrosion resistant metal.

1.14.18.4 All external nuts and bolts shall be manufactured from stainless steel. Care shall be taken to ensure that nuts and bolts are not over tightened such that the threads are damaged and the nuts and bolts cannot be loosened and/or retightened.

1.15 Switch Disconnector Modules

1.15.1 Each switch disconnector shall be a three pole switch that complies with the requirements for general purpose switches of SANS 62271-103.

1.15.2 Switch disconnectors shall be at least Class E2 M1 in accordance with SANS 62271-103.

1.15.3 The operating mechanism of switch disconnectors shall provide independent manual closing and opening

1.16 Cable Termination Enclosures, Terminations and Bushings

1.16.1 Cable Termination Enclosures and Terminations

1.16.1.1 The ring main units shall be fitted with air filled cable termination enclosures complying with SANS 876.

1.16.1.2 The cable termination enclosures shall be suitable for termination of three core impregnated paper insulated 11 kV cables of up to 120 mm2 with dry type cable terminations complying with SANS 1332 (95 kV BIL).

1.16.1.3 The cable termination enclosures shall be suitable for Type 2 shrouded and Type 3 unscreened separable connector terminations in accordance with SANS 876.

1.16.1.4 MV cable tails for the switch-fuse combination module shall be terminated by the Contractor with bolted lugs and screened seperable T-connectors (SSCs), as specified separately, and for the switch disconnector modules will be terminated by others with unscreened separable T-connectors (USCs). The USCs currently in use are the Raychem RICS 5-series and RICS 3-series.

1.16.1.5 The cable bushings shall be positioned in the ring main unit in the horizontal, not vertical, axis.

1.16.1.6 The height of the cable termination enclosures shall be a minimum of 650 mm, measured from the centre line of the cable bushings to the gland plate or cable support clamp, in accordance with SANS 876.

1.16.1.7 Cable termination enclosures with cable bushings at staggered heights will not be accepted.

1.16.1.8 The cable termination enclosures shall be fitted with internal arc rated removable covers in accordance with the internal arc classification of the ring main unit.

1.16.1.9 Any breathing and/or drain vents in the cable termination enclosures necessary to prevent condensation or facilitate draining shall be suitably vermin proofed.

1.16.1.10 Each cable termination enclosure shall be provided with a cable support clamp suitable for clamping of 35 mm2 - 120 mm2 PILC DSTA cable, and complying with the requirements of SANS 876.

1.16.1.11 The clamp arrangement shall be so designed that the cable is firmly secured but that no stress due to bending is placed on the cable when terminated. Any other arrangements for securing of the cables shall be subject to the Engineer's approval.

1.16.1.12 All 12 kV cables for connection to the switch disconnector modules will be provided, installed and terminated by others.

1.16.1.13 The cable connections between the ring main unit switch-fuse combination tee- off and the miniature substation transformer MV bushings shall be installed by the manufacturer in accordance with Section 7.7 of this specification.

1.16.2 Cable Bushings

1.16.2.1 The ring main unit switch disconnector modules and switch-fuse combination modules shall be fitted with Type A bushings complying with EN 50181.

1.16.2.2 The Type A bushings shall have an M16 x 2 thread and be suitable for the use of unscreened separable connectors.

1.16.2.3 The bushings shall be fitted with M12 stainless steel reducing stems and M12 nut, washer and spring washers.

1.16.2.4 The contractor shall ensure that M12 reducing stems supplied are of such size that when fully installed in the Type A bushing the 16 / 12 mm collar of the reducing stem remains fully recessed behind the contact face of the bushing and does not prevent good electrical contact between the cable lug and the bushing contact face

1.16.2.5 The bushings shall be manufactured and tested in accordance with SANS 60137. In addition to the voltage test specified in SANS 60137 the bushings shall be partial discharge tested in accordance with the requirements of SANS 60270. The magnitude of the discharge shall not be greater than 5 pC.

1.16.2.6 The surface of the bushings shall be smooth and free from blemishes and patches or fillings.

1.16.2.7 The bushings shall be made from insulating material to the approval of the Engineer. Dough moulded compound cable bushings are not acceptable.

1.16.2.8 Transit/storage bushing protection covers shall be fixed to the equipment to prevent damage to bushings.

1.17 Earth Fault Indication Equipment

1.17.1 One set of approved earth fault indication equipment comprising a split core current transformer and a self-powered control and indicating unit shall be provided with each ring main unit.

1.17.2 The control and indicating unit shall provide for manual resetting, with an automatic self-resetting facility with selectable time delay.

1.17.3 The sensitivity of this equipment shall be such that a current imbalance less than 50 A but not less than 25 A will operate the relay.

1.17.4 Only equipment proven on 12 kV systems will be considered. Full details of the earth fault indication equipment offered are to be submitted with the tender.

1.17.5 The control and indicating unit shall be mounted on the ring main unit or miniature substation MV compartment such that it is clearly visible and accessible to the operator from the operating side (i.e. front) of the ring main unit with the MV compartment doors open.

1.17.6 The earth fault indicator current sensor shall be wired to and temporarily secured onto the cable support clamp fitted in the left hand side switch disconnector cable termination enclosure (when viewed from the front of the ring main unit).

1.17.7 All wiring between the control and indicating unit and the current sensor shall be routed behind the front fascia of the ring main unit.

1.17.8 The earth fault indication equipment shall in addition be supplied with a remote indicator which shall be mounted on the outside of the MV compartment in such a manner that it can be clearly viewed from the front of the miniature substation (street side) without having to open the MV compartment. The remote indicator shall be visible during daylight and protected against vandalism by means of a steel tube fitted around the indicator and welded onto the enclosure.

1.17.9 The control unit and remote indicator shall not be mounted onto any removable sections of the enclosure and no wiring shall pass through these sections. If the remote indicator is mounted on the enclosure door it shall be situated as close as possible to the hinge side.

1.18 Maintenance Requirements

1.18.1 The switchgear offered shall not be excessively maintenance intensive, and shall be designed to be compatible with a maintenance cycle of not shorter than three years. However, a minimum period of five years would be a recommendation. The maintenance period and maintenance recommendations shall be clearly stated by the manufacturer in the tender documentation.

1.19 RMU Training

1.19.1 Tenderers shall include a separate price in the Price Schedule and a proposal for training of the Employer's staff in the theory and use of the RMU supplied with the miniature substations.

1.19.2 The training shall include, but not be limited to, theory of operation, detailed overview of equipment, preventative maintenance, maintenance manual review, interlocks and safety features, testing and troubleshooting, repairs, and a practical demonstration.

1.19.3 The training shall include the provision of manuals, all the necessary reference documentation and detailed drawings. All documentation shall be in English.

1.19.4 Training shall be carried out in groups of nominal size 15 individuals per session, although class sizes of 20 individuals should be accommodated if operational requirements dictate. It is expected that approximately 75 - 100 staff members will require training (ie. 5 repeats).

1.19.5 The training per group shall be completed within a single day and the full training intervention should be planned for completion within five working days.

1.19.6 Any special tools shall be identified and if not included shall be quoted for separately.

1.19.7 On completion of the training each candidate shall be provided with certification of attendance of the course, with copies of the certification being provided to the Employer.

1.19.8 The price shall cover the complete training and include all preparation, travelling, accommodations and incidental costs including all course materials. The price is for the complete training intervention (ie. five working days), and is not a price per person or day.

1.19.9 All training shall be undertaken at the Employer's premises.

DRAWINGS AND INFORMATION

1.20 Drawings

Tenderers shall submit with their tenders the following drawings to enable the Employer to verify the compliance of the equipment offered with the specification:

1.20.1 Fully dimensioned drawings indicating the general arrangement of the transformers and miniature substations.

1.20.2 Fully dimensioned arrangement drawing for the ring main unit showing all operating and cable test facilities, cable boxes, cable clamping, cable termination arrangements and clearances between bushings and from bushing centres to earth.

1.20.3 Section drawings of the ring main unit showing general details of construction and all principal components and dimensions, including internal arc overpressure relief provisions as offered for each miniature substation type and energy paths for each main compartment.

1.20.4 Full electrical schematic diagrams for miniature substations, transformers and ring main units, including LV compartment layout drawings, shunt tripping schematics and equipment details, and electrical interlock schematics.

1.20.5 In addition the general arrangement and electrical schematic diagrams shall be resubmitted by the successful Tenderer after contract award for formal approval before manufacture of the equipment is commenced. The Contractor shall provide one electronic copy (in DXF and pdf formats) of each approved drawing for the Employers records before commencement of deliveries.

1.21 Instruction Books

Copies, in English, of operating and maintenance instructions covering each type of equipment provided shall be supplied by the Contractor before delivery, and these shall include full detailed drawings. A copy shall also be provided on an USB Flash Drive in Portable Document Format (pdf). These shall include a comprehensive spare parts catalogue.

TESTS AND INSPECTIONS

1.22 Inspections

1.22.1 During manufacture and prior to despatch the ring main units, transformers and assembled miniature substations will be inspected by the Engineer or his duly appointed representative who will call for such tests as he may consider necessary. To this end, the Engineer or his representative shall, during normal working hours, be given all reasonable access and facilities for the carrying out of his duties and shall have the right of entry into the factory of the manufacturer and the factory of any sub-contractor to the manufacturer, where work in accordance with this specification may be in progress.

1.22.2 Before the dispatch of any transformer, miniature substation or ring main unit from the factory of manufacture it shall have been inspected by the Engineer or his duly appointed representative and an Acceptance Certificate shall have been issued. The manufacturer shall notify the Engineer at least one week in advance of the proposed dates for final inspections, and units shall be fully completed prior to the day of the final inspection.

1.23 Type Tests

1.23.1 The switchgear, transformers, miniature substations and MV HRC Fuses shall have passed such type tests as are laid down in SANS 780, SANS 1029, SANS 1874, SANS 60282-1, SANS 62271-200, SANS 62271-202, and shall comply with these specifications. Such type tests shall include short circuit withstand tests of transformers and determination of sound level tests, as specified in SANS 780.

1.23.2 The tests shall have been conducted by an accredited independent test laboratory and approved by the Engineer. The testing laboratory shall be accredited by a national accreditation body that is a member of the International Laboratory Accreditation Cooperation.

1.23.3 The Tenderer shall submit with his tender a Schedule of Type Tests detailing all completed type tests applicable to each item tendered, as specified. The schedule shall detail the full description of the item tested, the test authority, the type test certificate numbers, the applicable standard and the specific tests covered by the certificate. Type tests not detailed on the schedule will be deemed not to have been completed.

1.23.4 The Tenderer shall submit copies of the cover sheets, the tested equipment detail pages and the results summaries for the type test certificates detailed in the Type Tests Schedule, as well as certificates of rating.

1.23.5 Tenderers shall not submit the full type test certificates but only the relevant pages detailed above. The full type test certificates shall be made available to the Engineer for review on request.

1.23.6 Only identical units to those successfully type tested or, in the case of transformers, units defined as Similar Transformers (in accordance with SANS 60076-5 Annex B) to those that have been type tested will be acceptable. Non-applicable type test certificates should not be submitted. Tenderers shall submit copies of complete detailed drawings of internal connections and facilities as type tested.

1.23.7 Where the Tenderer is invoking the SANS 60076-5 Similar Transformers definition to justify the applicability of a type test carried out on a unit of different rating, the Tenderer shall clearly indicate this in the Schedule of Type Tests detailed above, per instance, detailing the certificate number that is deemed to be applicable and including clear justification explaining why the Similar Transformers definition is applicable with clear reference to the relevant sub-clause.

1.23.8 Tests may be waived by the Engineer.

1.24 Routine Tests

1.24.1 Routine tests as specified in SANS 780, SANS 1029, SANS 1874, SANS 62271-200, SANS 62271-202 and other applicable standards shall be carried out on all units prior to dispatch, and shall be witnessed by the Engineer or his duly appointed representative.

1.24.2 In addition to the routine tests laid down in Section 6 of SANS 780 (to be performed on all transformers), sample sound level tests shall be carried out on one or more samples from each batch (ie. Separate purchase order and kVA rating) of transformers and miniature substations to prove on going compliance with the SANS 780 audio sound level limits.

1.24.3 Insulation resistance Megger readings of MV phase to LV phase, as well as MV and LV phase to earth (neutral to earth link removed) shall be taken after assembly and in the presence of the Engineer. The minimum acceptable readings for the high and low voltage sides are 2 000 MΩ and 500 MΩ at 2 kV minimum, respectively.

1.24.4 PCB free / oil compliance test certificates shall be submitted to the Employer per batch of transformers or miniature substations, certifying that the oil used in the transformers complies with the required standards. Such certificates shall reference the full range of transformer serial numbers covered by the oil compliance test certificate.

1.24.5 Certificates giving the full results of all tests made on the equipment shall be submitted to the Engineer by the Contractor for approval prior to or at the time of delivery of the equipment. All routine test certification shall be dated and signed by the manufacturer's test engineer. Equipment will not be formally accepted until such time as full routine test certification has been submitted and approved.

1.24.6 In addition, all routine test certification shall be submitted electronically (in pdf format) to the Engineer prior to delivery of the equipment, for the Employer's records.

GENERAL LAYOUT

The general layout of the project notice board provides for a project title field in which the project is described and the client is identified. Below the project title field the board is divided into three vertical areas. The left hand side of this area is reserved for the seals/logos of the constituents of the BEP Grouping whose members may be commissioned to deliver professional services to the project. The central area is for listing the professional consultants on the project and the right hand area may be used for displaying individual company logos and any additional affiliation which the consultant may have in the BEP Grouping eg dual membership of SAIA and SABTACO.

RECOMMENDATIONS:

1 The names of all professional consultants involved in the project and the main contractor should be dlsplayed on the project notlce board.

2 Only bone fide members of the five constituents of the Built Environment Professions Grouping (ACPM, ASAQS, CESA, SABTACO and SAIA) may apply their association's seal/logo to the notice board.

3 When applied, this seal/logo is placed to the left of the named discipline and consultant, centered in the vertical space provided and central on the horizontal line separating the discipline name from the consultant's name.

4 Where a consultant is a member of more than one of the five BEP Grouping associations, the consultant may elect to display both associations' seals/logos. I this case, one appropriate seal is selected for display on the left hand side of the board while the other seal is displayed on the right hand side above the consultant's own logo (see item 7 below) – vertical spacing of the logos may require adjustment.

5 Where the contractor is a member of MBSA or SAFCEC these seals may be applied in the same way as the professional associations' seals, ie to the left of the named contractor (see item 3 above).

6 All parties are entitled to apply individual company logos in association with their names.

7 When applied, the consultants' logos are placed to the right of the named discipline and consultant, centered in the vertical space provided and central on the horizontal line separating the discipline name from the consultant's name.

8 The client's seal/logo is placed to the right hand side of the client's name in the bottom right hand portion of the project title field.

9 Seals/logos may either all be in full colour and reproduced faithfully according to specification of the association/orgnaisation represented, or all in black and white , as may be agreed by the parties concerned. It is the responsibility of each consultant to ensure that the appropriate information is provided.

10 Seals/logos may either be provided in suitable electronic form or as print media, eg seal logo to full size, printed on transparent, adhesive media as supplied by the associations

11 Variations which determine the height of the board are indicated.

12 The signwriter should be issued with the relevant information for the board as well as copies of recommendation in hardcopy form. Alternatively the signwriter may be issued with the information in electronic form as long as these recommendations are clearly stated and followed.

13 Where the architect is not architect, principal consultant and principal agent, the order in which the parties are listed on the project board is by mutual agreement. The contractor is generally the last name to be listed.

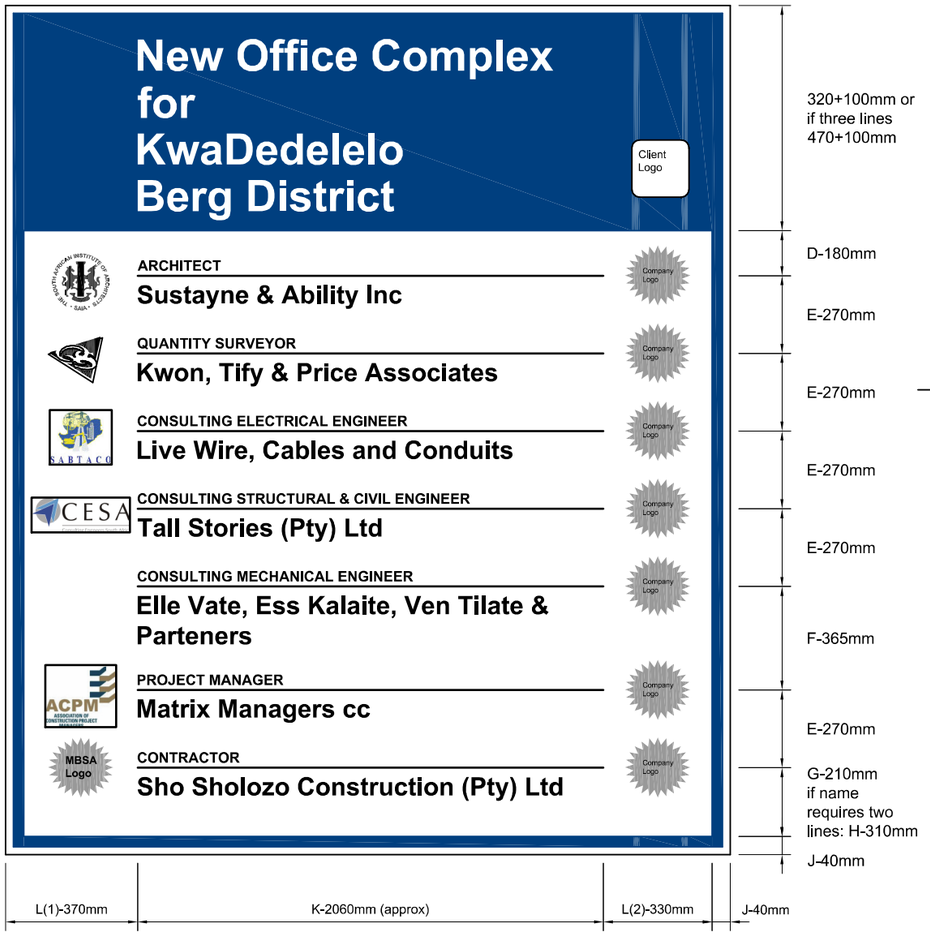

TECHNICAL DATA

LETTERING & SETTING OUT:	TITLE BLOCK	100mm Arial bold upper and lower case letters in white.
	NAMES OF PRACTICES & FIRMS	75mm Arial bold upper and lower case letters in black. Allow 100mm between bottom of line and bottom of lettering.
	PROFFESIONAL TITLES	50mm Arial bold upper case letters only in black. Allow 10mm between line and professional titles.
	HORIZONTAL LINE	8mm thick in black

BORDERS, FIELDS & SEALS/LOGOS	OUTER BORDER	Dimension: 8mm wide Colour: White
	INNER BORDER	Dimension: 24mm wide Colour: Blue to match RGB 3;91;51 (R:3, G:91, B:151)
	TITLE BLOCK FIELD	Dimension: As specified below Colour: Blue to match RGB 3;91;51 (R:3, G:91, B:151)
	CONSULTANTS/ CONTRACTOR FIELDS	Dimension: As specified below Colour: White
	SEAL/LOGO ACTUAL SIZES	The full-size SAIA logo is 190mm diameter (reference dimension) - other seals/logos to be scaled accordingly

LEGEND:	A	170mm	The dimension from the top of the board to the bottom of the letters on the first line of the title block.
	B	320mm	The dimension from the top of the board to the bottom of the letters on the second line of the title block.
	C	470mm	The dimension from the top of the board to the bottom of the letters on the third line of the title block (if the title requires three lines)
	D	180mm	This dimension is standard, and is to the centre of the horizontal line.
	E	270mm	This dimension is standard if only one line is required for the practice name.
	F	365mm	This dimension is typical if two lines are required for the practice name.
	G	210mm	This dimension should be used where the last practice on the board requires only one line.
	H	310mm	This dimension should be used where the last practice on the board requires two lines.
	J	40mm	White border: 8mm wide Blue border: 32mm wide The blue border shall have a radius of 60mm to the corners.
	K	2060mm	This is an approximate dimension.
	L(1)	370mm	Allow: 40mm white and blue borders 330mm width for professional associations, contractors seals/logos
	L(2)	330mm	Net width for individual company logos

STELLENBOSCH
STELLENBOSCH • PNIEL • FRANSCHHOEK
MUNISIPALITEIT • UMASIPALA • MUNICIPALITY

STANDARD DETAIL DRAWING

PROJECT NAME BOARD

Scale	Paper Size
N.T.S.	A3

Drawing No.
SG1

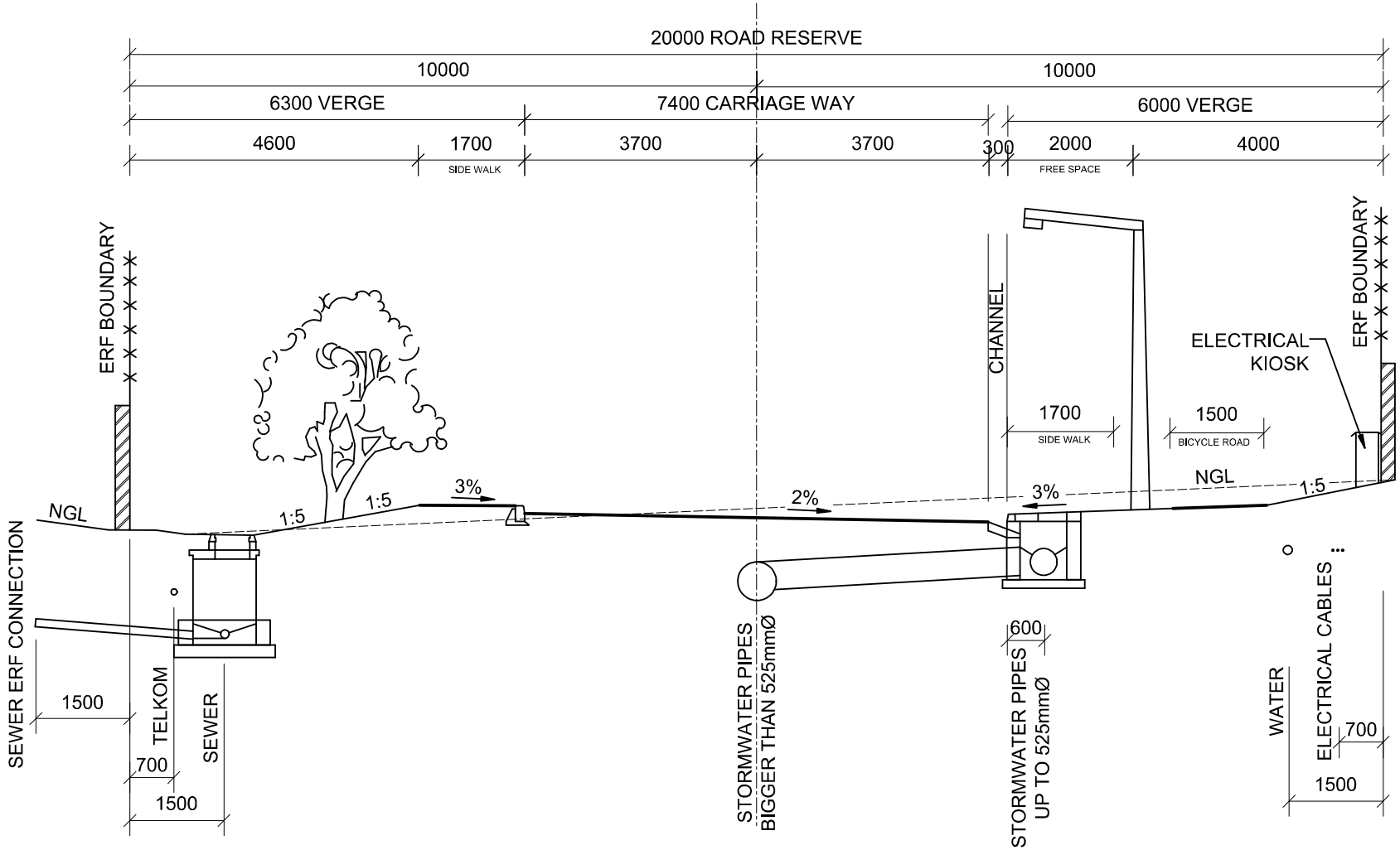

STELLENBOSCH
STELLENBOSCH • PNIEL • FRANSCHHOEK
MUNISIPALITEIT • UMASIPALA • MUNICIPALITY

STANDARD DETAIL DRAWING

TYPICAL LAYOUT OF SERVICES IN 20m ROAD RESERVE

Scale	Paper Size
1:100	A4

Drawing No.
SG2

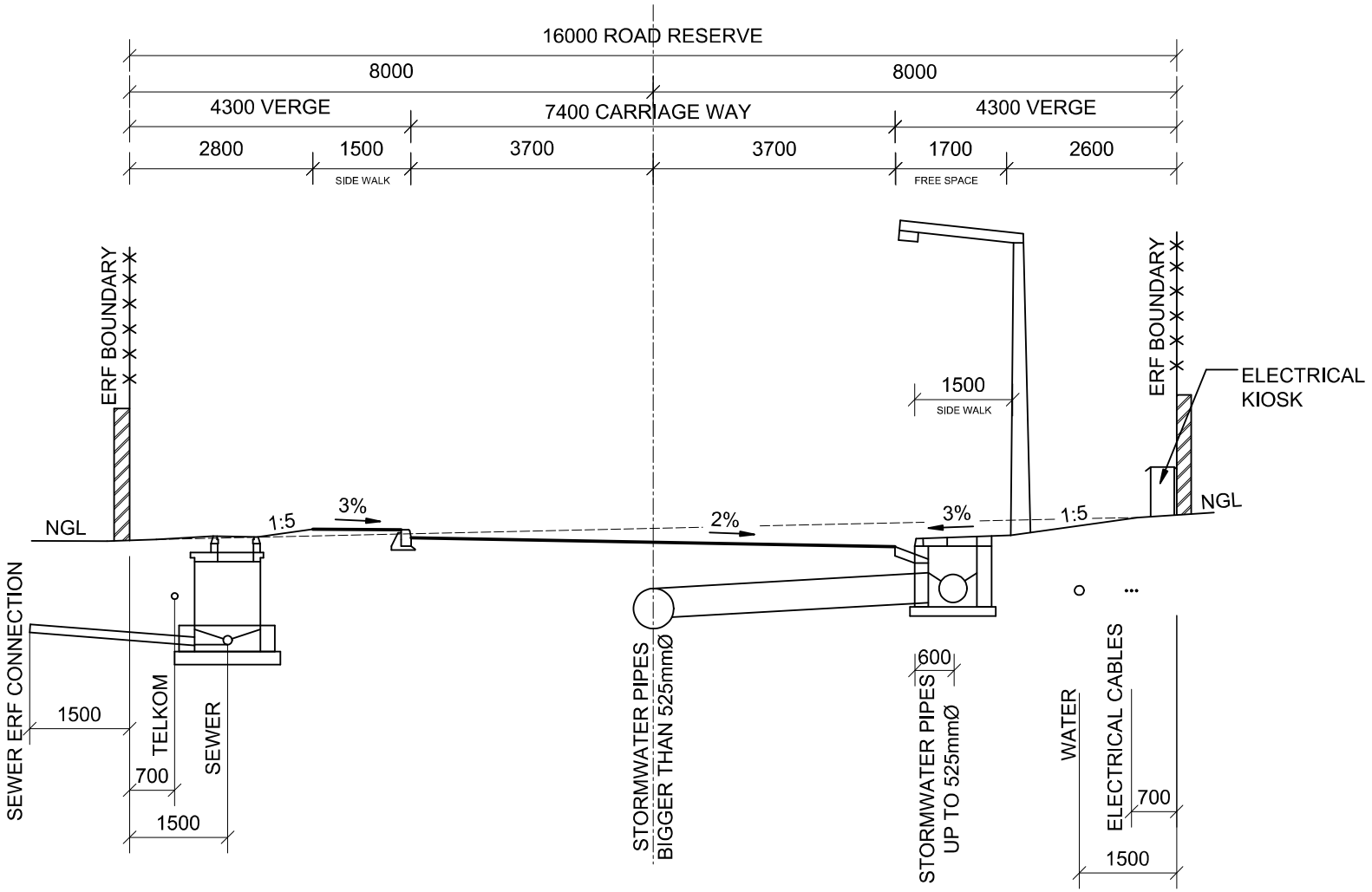

STELLENBOSCH
STELLENBOSCH • PNIEL • FRANSCHHOEK
MUNISIPALITEIT • UMASIPALA • MUNICIPALITY

STANDARD DETAIL DRAWING

TYPICAL LAYOUT OF SERVICES IN 16m ROAD RESERVE

Scale	Paper Size
1:100	A4

Drawing No.
SG3

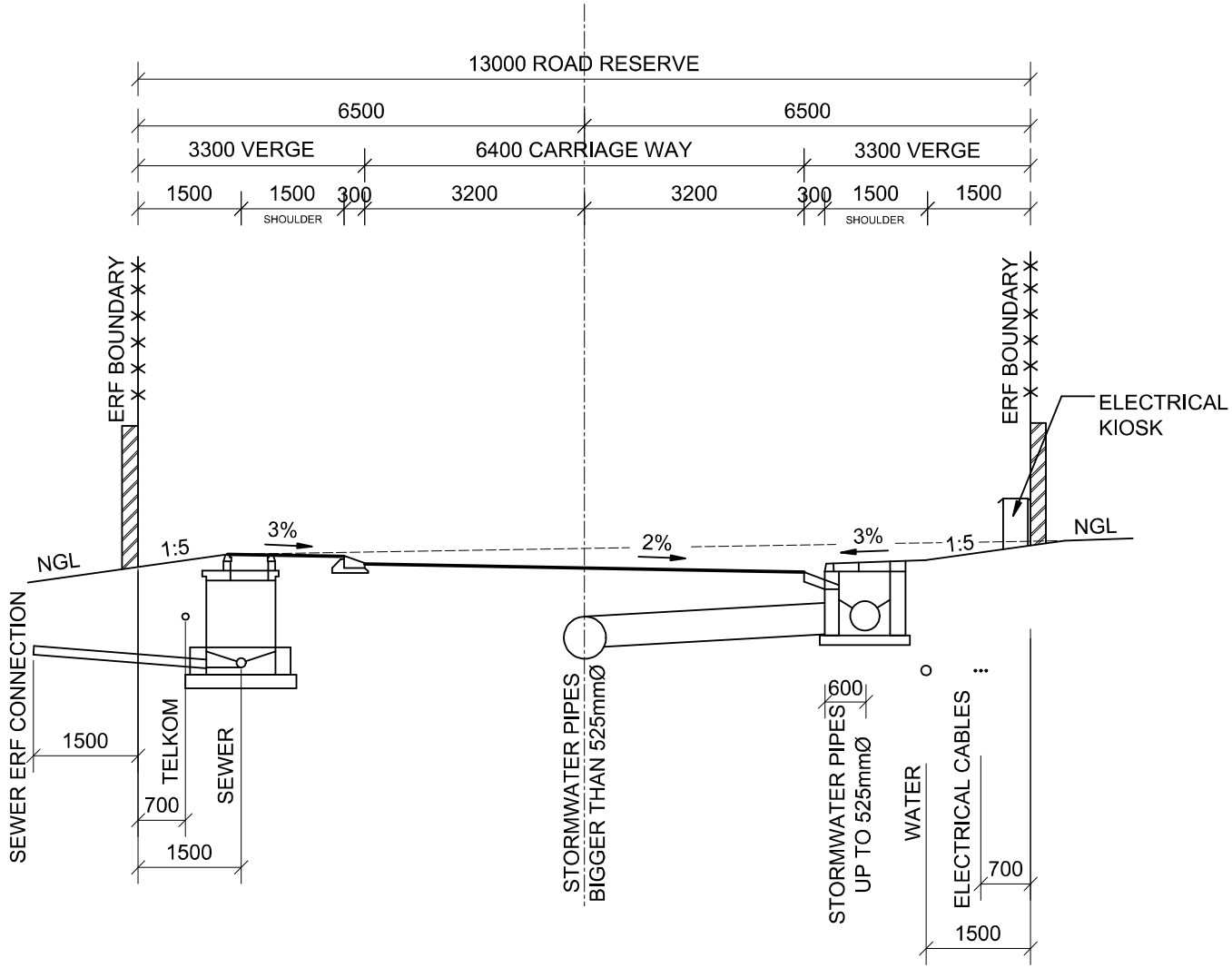

STELLENBOSCH
STELLENBOSCH • PNIEL • FRANSCHHOEK
MUNISIPALITEIT • UMASIPALA • MUNICIPALITY

STANDARD DETAIL DRAWING

TYPICAL LAYOUT OF SERVICES IN 13m ROAD RESERVE

Scale	Paper Size
1:100	A4

Drawing No.
SG4

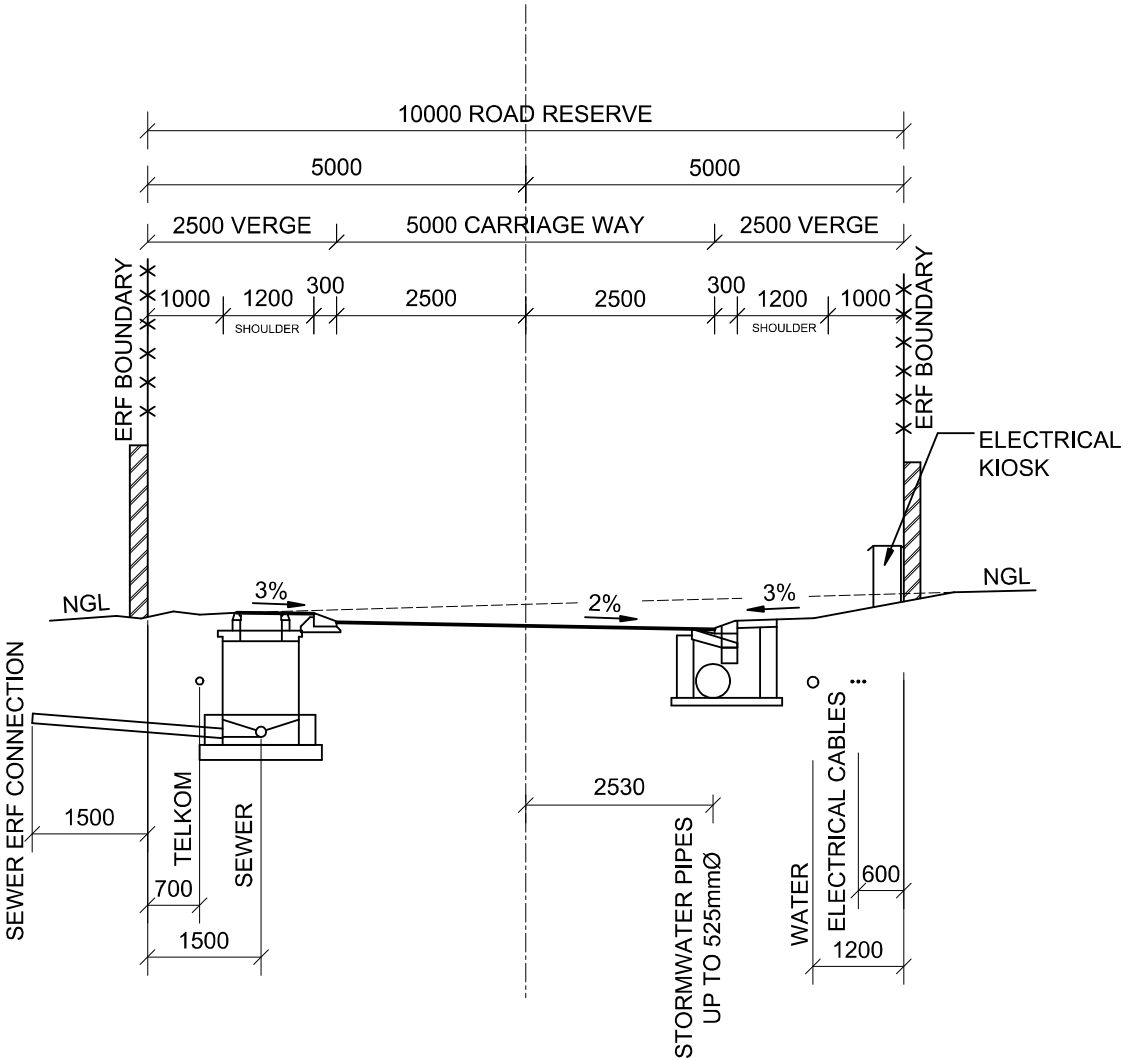

STELLENBOSCH
STELLENBOSCH • PNIEL • FRANSCHHOEK
MUNISIPALITEIT • UMASIPALA • MUNICIPALITY

STANDARD DETAIL DRAWING

Scale	Paper Size
1:100	A4

TYPICAL LAYOUT OF SERVICES IN 10m ROAD RESERVE

Drawing No.
SG5

SERVICES TYPE	LETTERING (CUT IN KERB WITH GRINDER)	COLOUR (OF LETTERING)	SPECIFICATIONS	EXAMPLES
DUCTS				
TELKOM	T	GREEN	CUT LETTERING ON KERB FACE WITH GRINDER, 75mm HIGH x 5mm THICK. PAINT LETTER WITH POLY-ACRYLIC ROOF PAINT.	
ELECTRICAL	E	RED		
TRAFFIC	R	YELLOW		
PARKS (IRRIGATION)	P	BLACK		
WATERMAINS - NOTE FOR ROUTE MARKERS AND VALVE AND HYDRANT MARKERS OUT OF ROAD RESERVES OR TOO FAR FROM KERBS - SEE DRAWING NO. SG7				
VALVE	V	WHITE	BLUE COVER FOR CHAMBER. PAINT ONE KERB (1M) BLUE (WITH POLY ACRYLIC ROOF PAINT) CUT LETTERING ON KERB FACE WITH GRINDER, 75MM HIGH x 5MM THICK. PAINT LETTER WITH POLY-ACRYLIC ROOF PAINT. OPTIONAL EXTRA: BLUE ROAD STUD ON CENTRE LINE OF ROAD – FIXED TO SURFACE WITH EPOXY.	
FIRE HYDRANT	FH	WHITE	YELLOW COVER FOR CHAMBER. PAINT ONE KERB (1m) YELLOW (WITH POLY ACRYLIC ROOF PAINT) CUT LETTERING ON KERB FACE WITH GRINDER, 75mm HIGH X 5mmTHICK. PAINT LETTER WITH POLY-ACRYLIC ROOF PAINT. PAINT FH SYMBOL ON ROAD SURFACE NEXT TO KERB USING YELLOW ROAD MARKING PAINT (TO SANS 731).	
			OPTIONAL EXTRA: YELLOW ROAD STUD ON CENTRE LINE OF ROAD – FIXED TO SURFACE WITH EPOXY.	
HOUSE CONNECTIONS				
SEWER	SINGLE GROOVE	BROWN	CUT SINGLE GROOVE ON KERB FACE WITH GRINDER 75mm HIGH X 5mm THICK. PAINT GROOVE WITH POLY-ACRYLIC ROOF PAINT. MARKER POSTS: INSTALL 1200mm X 50mm X 50mm TIMBER POST PAINTED BROWN PROTRUDING 500mm ABOVE FINISHED GROUND LEVEL AT CONNECTION POINT. REFER TO DRAWING NO SS14	
WATER	SINGLE GROOVE	BLUE	CUT SINGLE GROOVE ON KERB FACE WITH GRINDER 75mm HIGH X 5mm THICK. PAINT GROOVE WITH POLY-ACRYLIC ROOF PAINT. MARKER POSTS: INSTALL 1200mm X 50mm X 50mm TIMBER POST PAINTED BLUE PROTRUDING 500mm ABOVE FINISHED GROUND LEVEL AT CONNECTION POINT. REFER TO DRAWING NO. SW10	
ELECTRICAL	SINGLE GROOVE	RED	CUT SINGLE GROOVE ON KERB FACE WITH GRINDER, 75mm HIGH X 5mm THICK. PAINT GROOVE WITH POLY-ACRYLIC ROOF PAINT.	

NOTE: POLY ACRYLIC ROOF PAINT TO BE USED ON CONCRETE SURFACES

STELLENBOSCH
STELLENBOSCH • PNIEL • FRANSCHHOEK
MUNISIPALITEIT • UMASIPALA • MUNICIPALITY

STANDARD DETAIL DRAWING

SERVICES MARKINGS

Scale	Paper Size
N.T.S.	A4

Drawing No.
SG6

NOTES:

1. ROUTE, VALVE AND HYDRANT MARKERS, OUT OF ROAD RESERVES OR TOO FAR FROM KERBS.

2. POST MUST BE SET IN 300x300x200mm CONCRETE BASE (20MPa) AND PROTRUDE 500mm ABOVE GROUND.

3. REINFORCE MARKER WITH 1xY10 BAR IN CENTRE (875mm LONG).

4. VALVE AND ROUTE MARKERS SHALL ALSO INDICATE PIPE DIAMETER IN MILLIMETERS.

5. NON REFLECTORIZED PAINT SHALL BE USED ACC. TO SABS 731 COLOUR SPECIFICATIONS:
5.1. MARKER - BLUE (EXPOSED SECTION TO BE PAINTED TO 100mm BELOW NATURAL GROUND LEVEL); HYDRANT - YELLOW
5.2. LETTERING - WHITE

6. PIPE ROUTE MARKERS
6.1. SAME AS VALVE MARKER - REPLACE "V" WITH "W"
6.2. EVERY 50m AND CHANGE IN DIRECTION

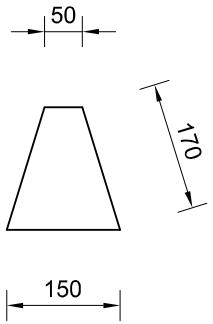

PLAN

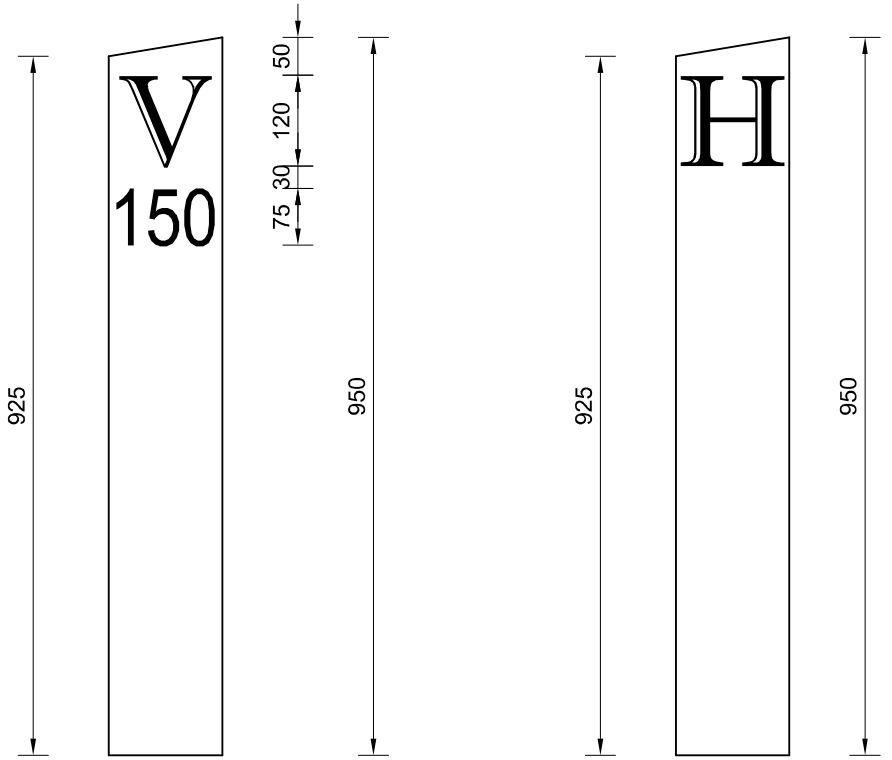

ELEVATION

STELLENBOSCH
STELLENBOSCH • PNIEL • FRANSCHHOEK
MUNISIPALITEIT • UMASIPALA • MUNICIPALITY

STANDARD DETAIL DRAWING

ROUTE, VALVE AND HYDRANT MARKERS OUTSIDE ROAD RESERVES OR TOO FAR FROM KERBS

Scale	Paper Size
1 : 10	A4

Drawing No.
SG7

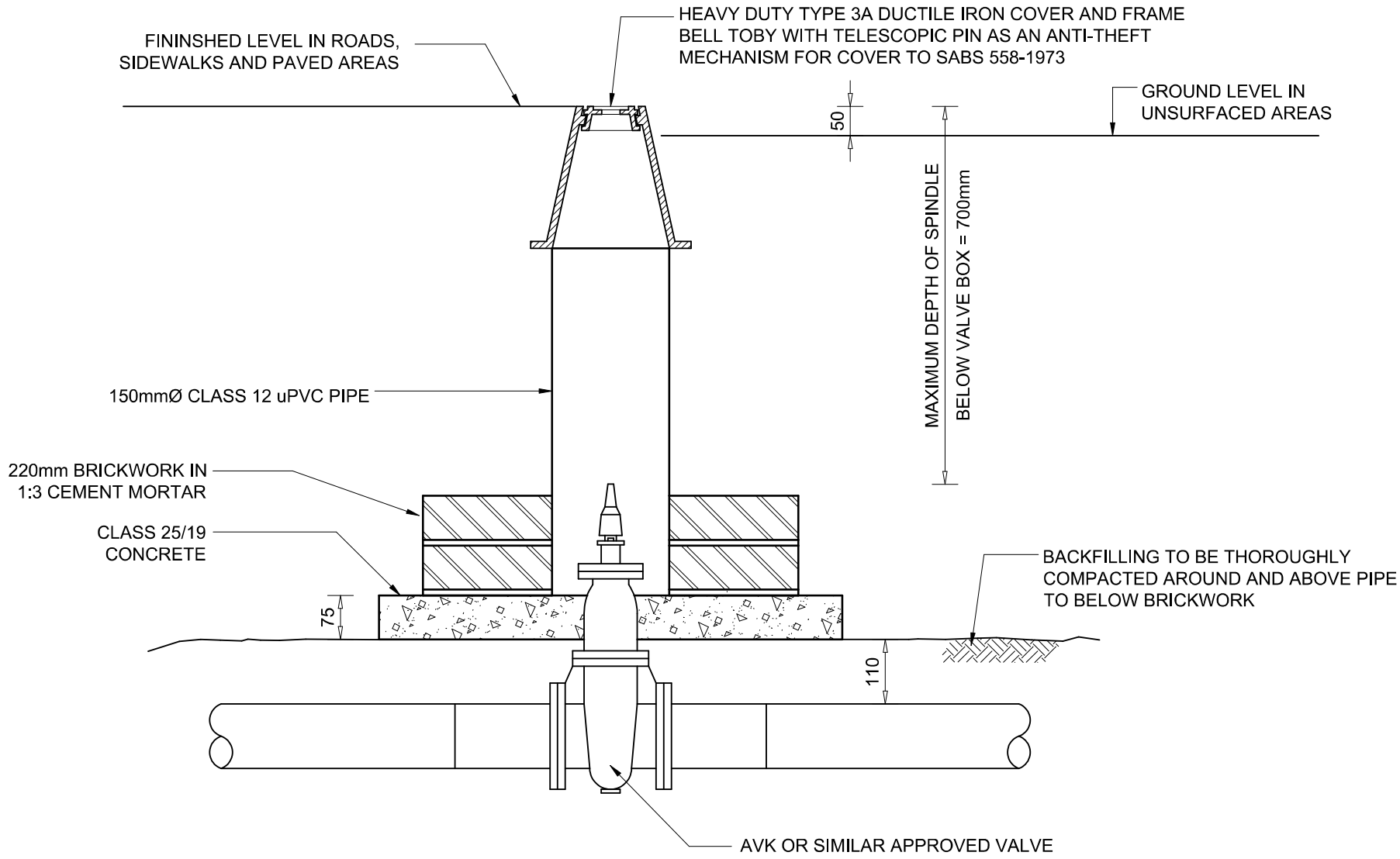

STELLENBOSCH
STELLENBOSCH • PNIEL • FRANSCHHOEK
MUNISIPALITEIT • UMASIPALA • MUNICIPALITY

STANDARD DETAIL DRAWING

VALVE CHAMBER

Scale	Paper Size
1 : 10	A4

Drawing No.
SW1

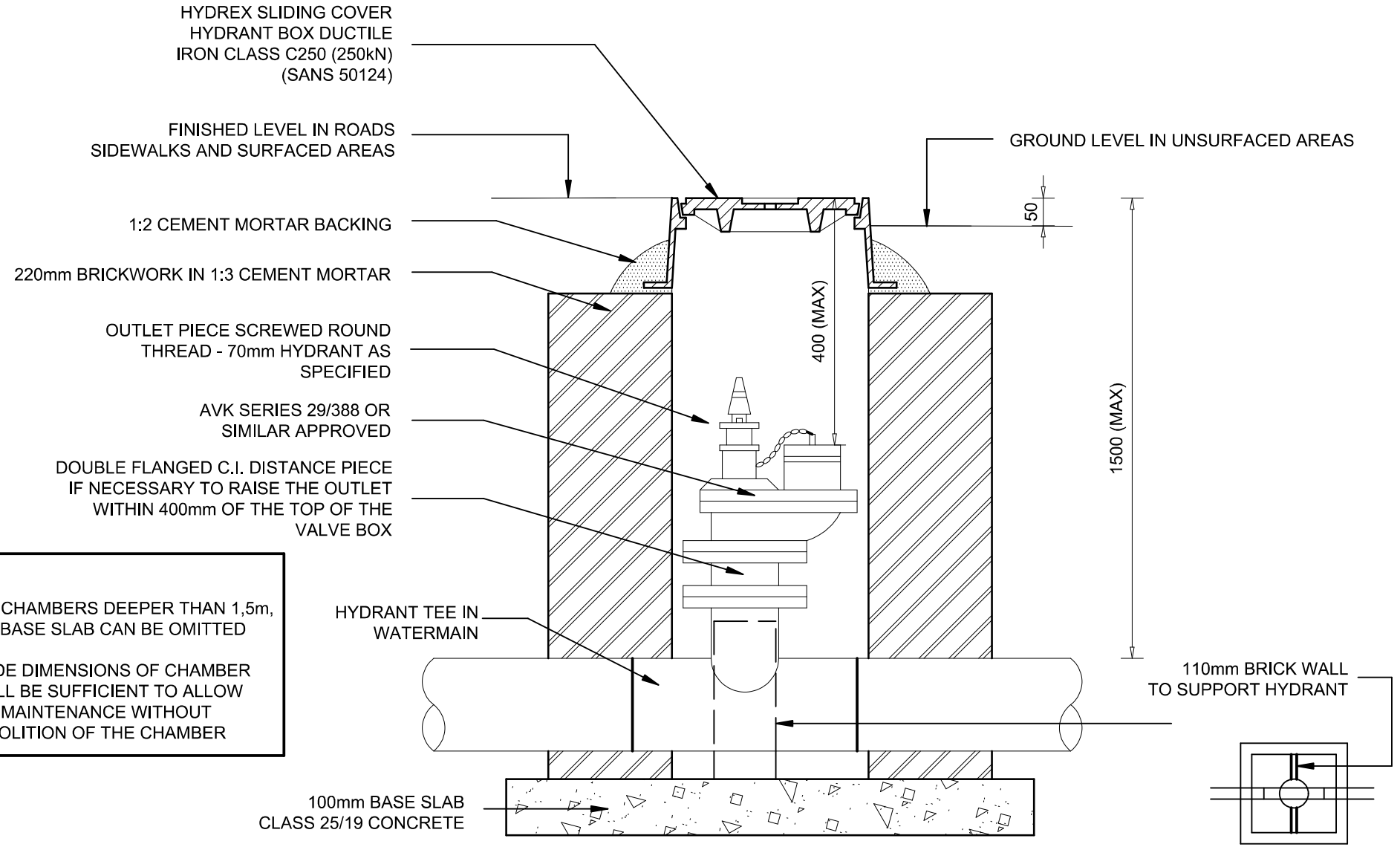

NOTES :

1. FOR CHAMBERS DEEPER THAN 1,5m, THE BASE SLAB CAN BE OMITTED
2. INSIDE DIMENSIONS OF CHAMBER SHALL BE SUFFICIENT TO ALLOW FOR MAINTENANCE WITHOUT DEMOLITION OF THE CHAMBER

STELLENBOSCH
STELLENBOSCH • PNIEL • FRANSCHHOEK
MUNISIPALITEIT • UMASIPALA • MUNICIPALITY

STANDARD DETAIL DRAWING

FIRE HYDRANT CHAMBER

Scale	Paper Size
1 : 10	A4

Drawing No.
SW2

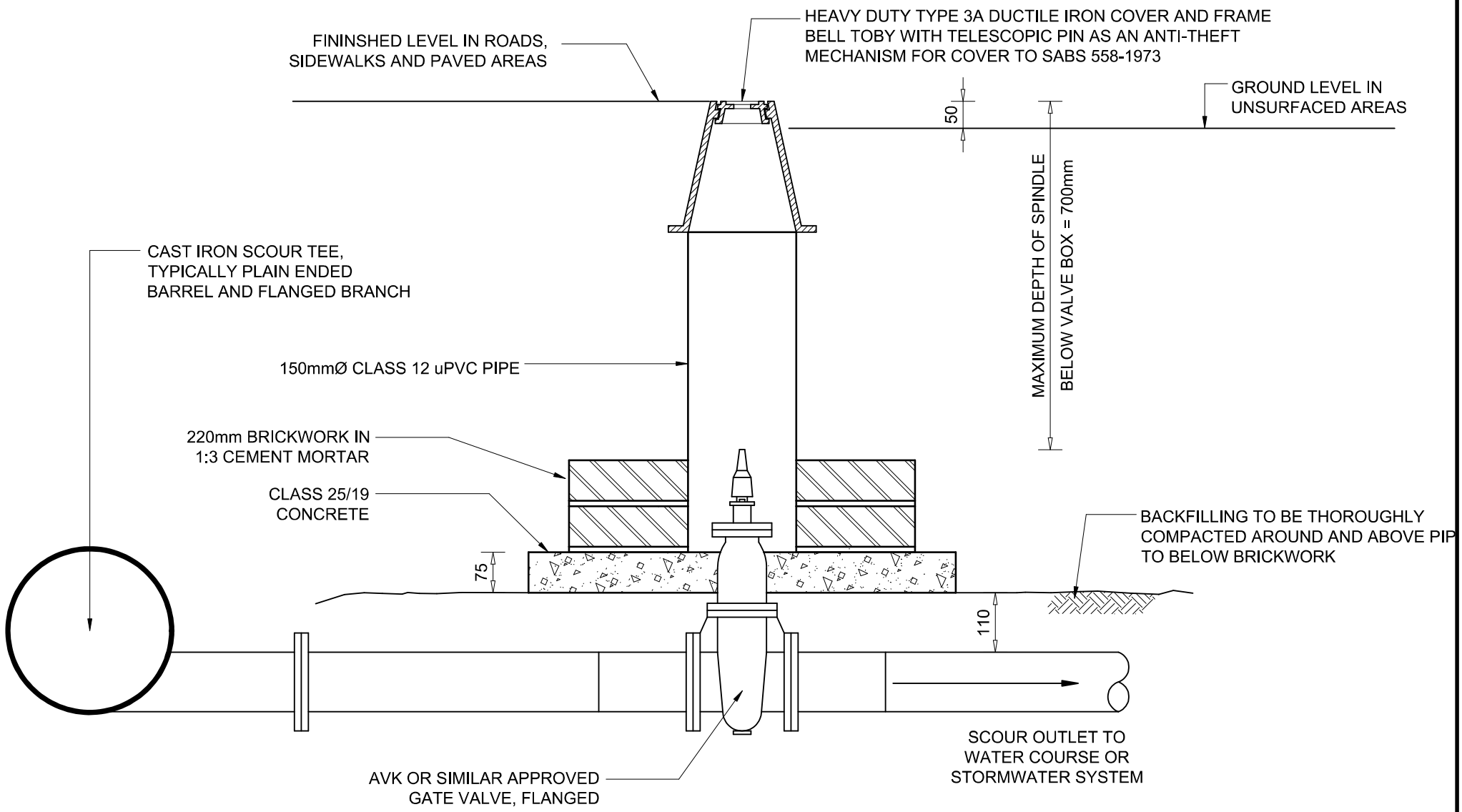

STELLENBOSCH
STELLENBOSCH • PNIEL • FRANSCHHOEK
MUNISIPALITEIT • UMASIPALA • MUNICIPALITY

STANDARD DETAIL DRAWING

SCOUR VALVE CHAMBER

Scale	Paper Size
1 : 10	A4

Drawing No.
SW3

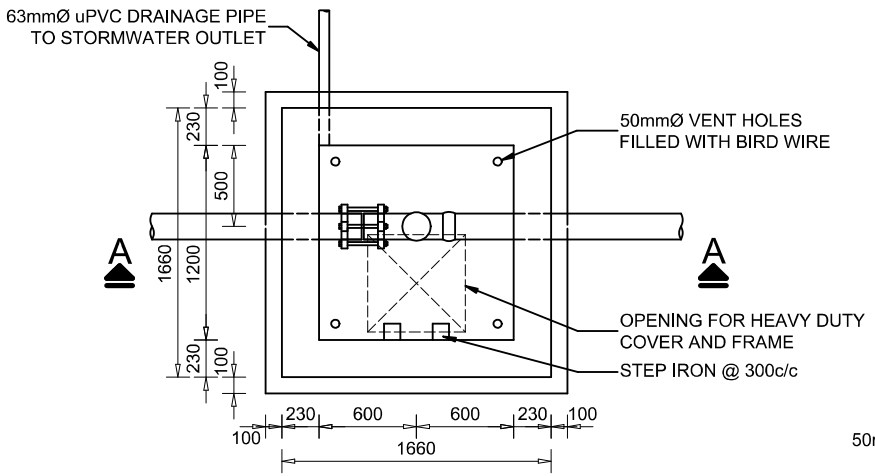

PLAN

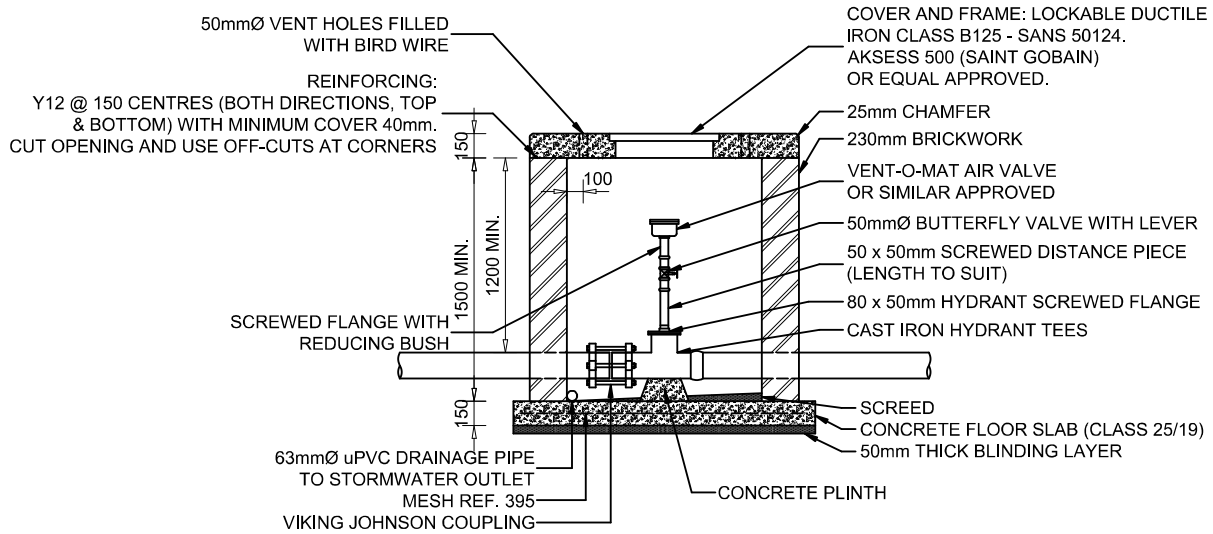

SECTION A - A

STELLENBOSCH
STELLENBOSCH • PNIEL • FRANSCHHOEK
MUNISIPALITEIT • UMASIPALA • MUNICIPALITY

STANDARD DETAIL DRAWING

SINGLE AIR VALVE CHAMBER

Scale	Paper Size
N.T.S.	A4

Drawing No.

SW4

PIPE DIAMETER	X	DEPTH OF BLOCK	Z
300	1950	1200	575
250	1625	1000	550
200	1300	800	475
150	1000	600	400
100	650	400	250
75	500	300	175
50	325	200	125

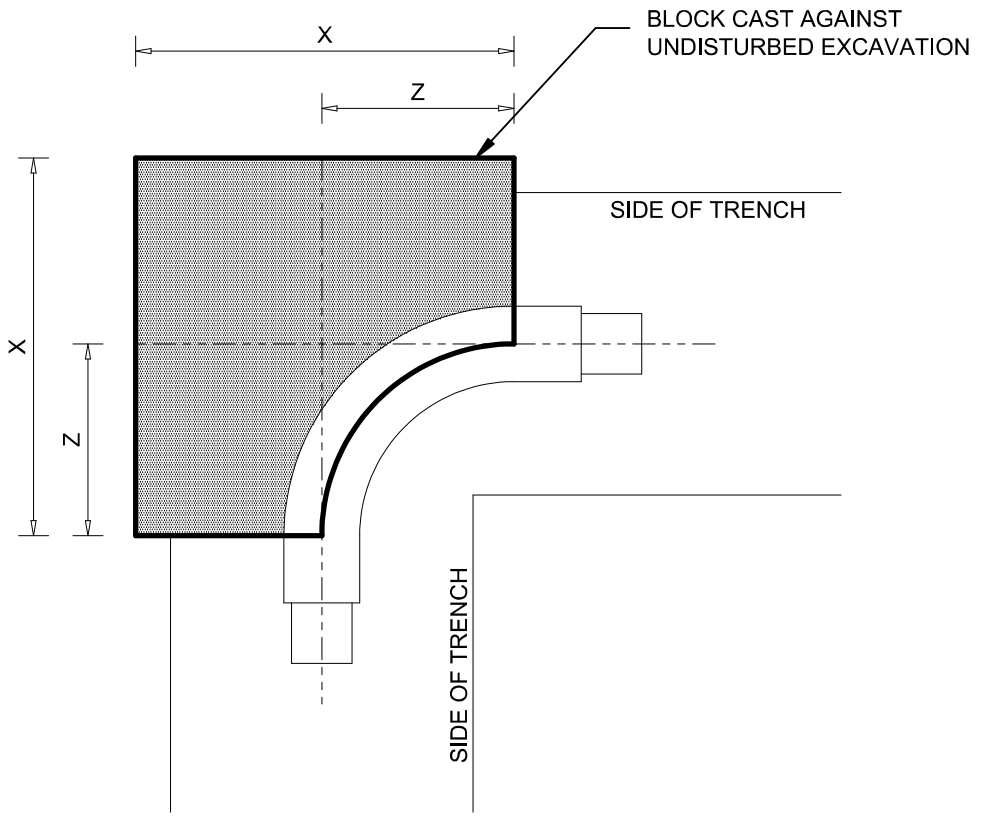

BEARING PRESSURE OF SOIL BEHIND
THRUST BLOCK MUST BE AT LEAST 40 kPA
AND THE TEST PRESSURE HEAD IN PIPELINE
NOT BIGGER THAN 135m

STELLENBOSCH
STELLENBOSCH • PNIEL • FRANSCHHOEK
MUNISIPALITEIT • UMASIPALA • MUNICIPALITY

STANDARD DETAIL DRAWING

THRUST BLOCK FOR 90° BENDS

Scale	Paper Size
N.T.S.	A4

Drawing No.
SW5

PIPE DIAMETER	X	DEPTH OF BLOCK	Z
300	1950	1200	550
250	1625	1000	450
200	1300	800	350
150	1000	600	275
100	650	400	200
75	500	300	150
50	325	200	100

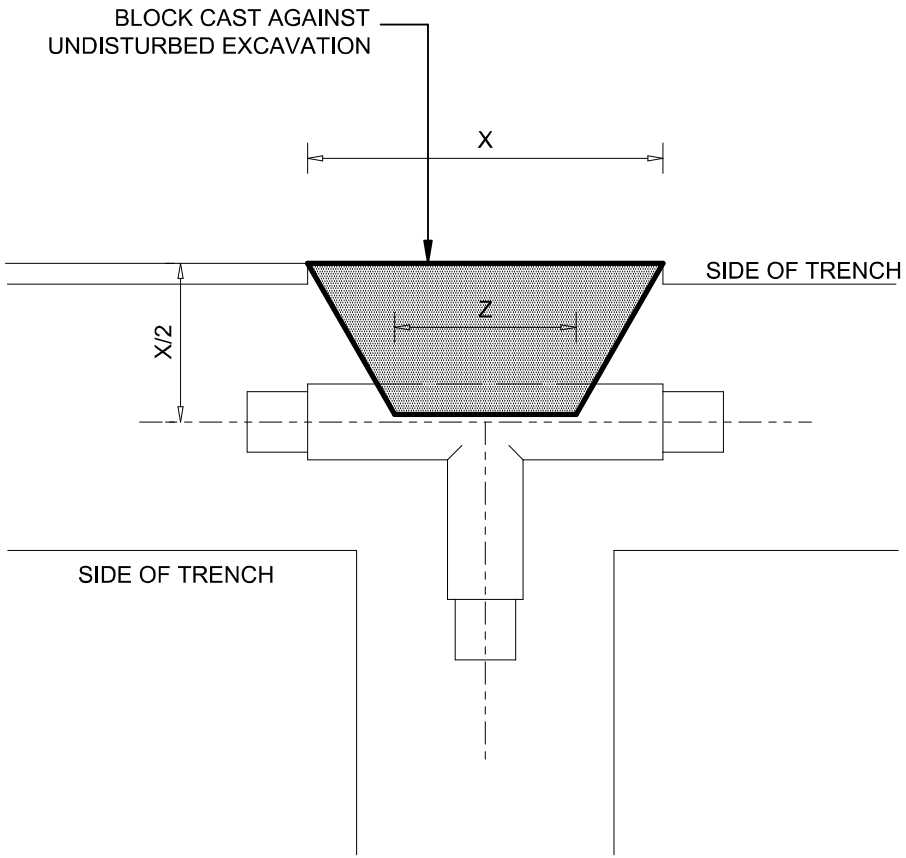

BEARING PRESSURE OF SOIL BEHIND
THRUST BLOCK MUST BE AT LEAST 40 kPA
AND THE TEST PRESSURE HEAD IN PIPELINE
NOT BIGGER THAN 135m

STELLENBOSCH
STELLENBOSCH • PNIEL • FRANSCHHOEK
MUNISIPALITEIT • UMASIPALA • MUNICIPALITY

STANDARD DETAIL DRAWING

THRUST BLOCK FOR TEES

Scale	Paper Size
N.T.S.	A4

Drawing No.
SW6

PIPE DIAMETER	X	DEPTH OF BLOCK	Z
300	1500	1200	375
250	1250	1000	350
200	1000	800	325
150	750	600	275
100	500	400	175
75	375	300	125
50	250	200	75

BEARING PRESSURE OF SOIL BEHIND
THRUST BLOCK MUST BE AT LEAST 40 kPA
AND THE TEST PRESSURE HEAD IN PIPELINE
NOT BIGGER THAN 135m

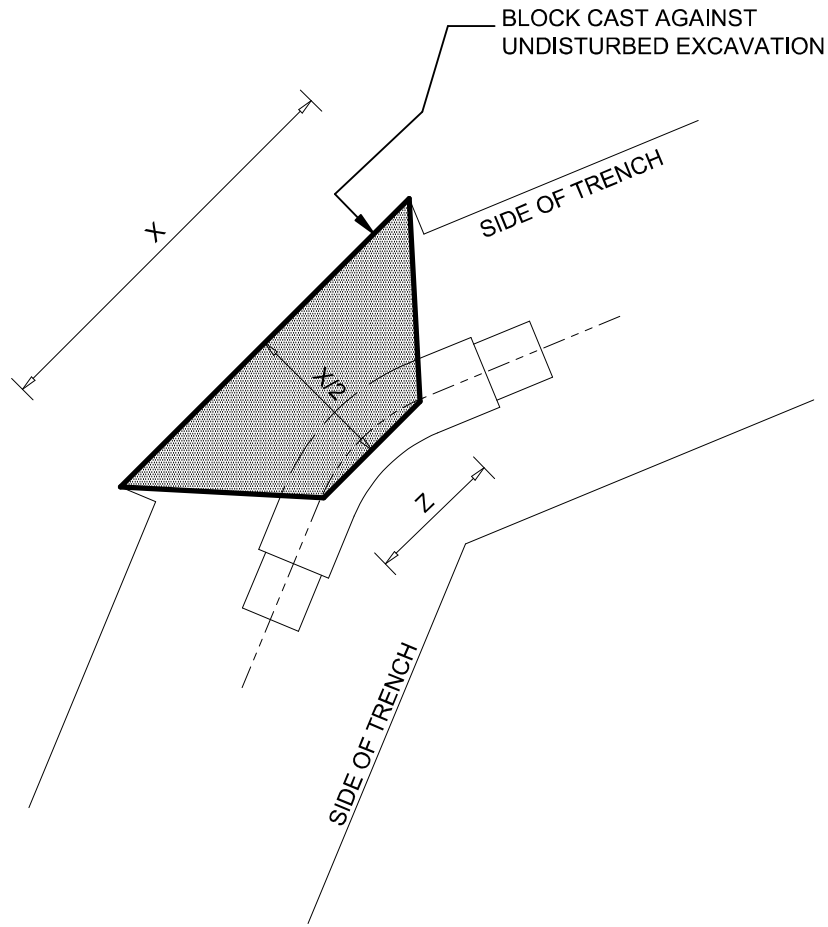

STELLENBOSCH
STELLENBOSCH • PNIEL • FRANSCHHOEK
MUNISIPALITEIT • UMASIPALA • MUNICIPALITY

STANDARD DETAIL DRAWING

THRUST BLOCK FOR 45° BENDS

Scale	Paper Size
N.T.S.	A4

Drawing No.
SW7

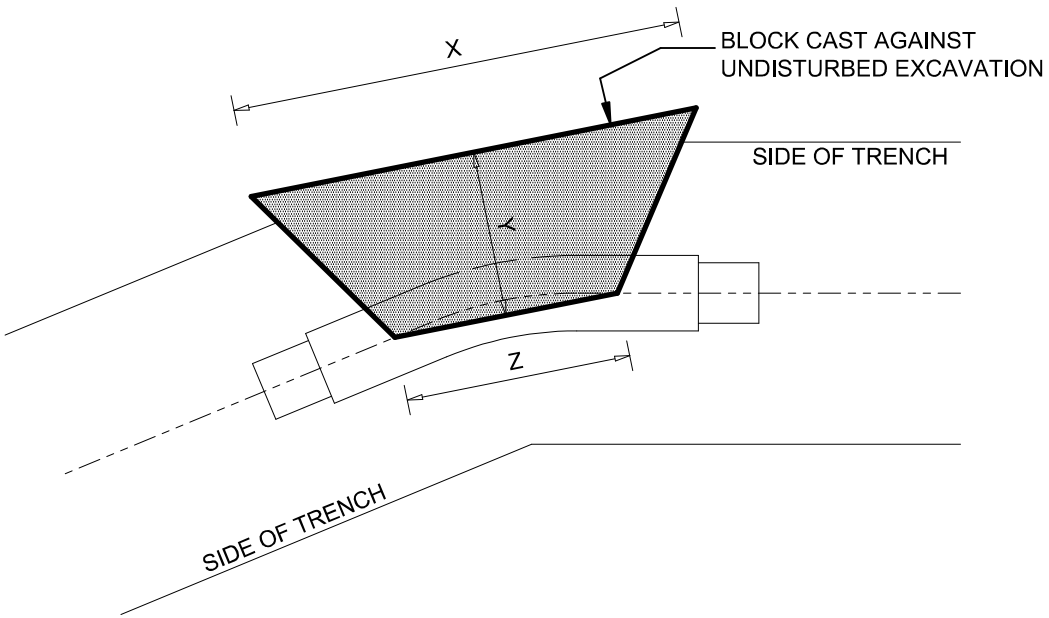

FOR 11¼° AND 22½° BENDS

NOTES:

1. TO CAST CONCRETE AGAINST UNDISTURBED EXCAVATION Y MUST BE INCREASED AS NEEDED.
2. BEARING PRESSURE OF SOIL BEHIND THRUST BLOCK MUST BE AT LEAST 40 kPa AND THE TEST PRESSURE HEAD IN PIPELINE NOT BIGGER THAN 135 kPa.
3. THRUST BLOCKS MUST BE BUILT SYMMETRICAL AROUND FITTINGS.

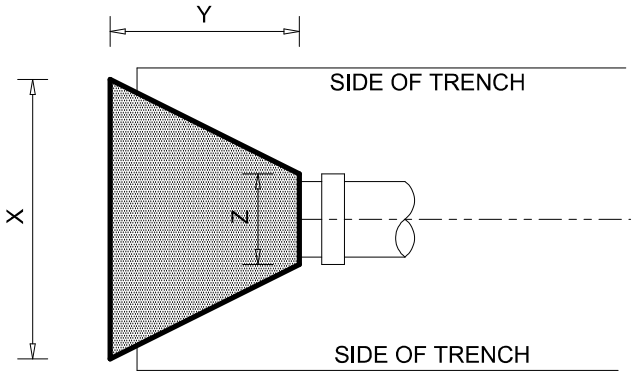

FOR ENDCAPS

FOR 11¼° BENDS

PIPE DIAMETER	DEPTH OF BLOCK	X	Y	Z
150	300	400	350	150
100	200	300	300	100
75	200	200	300	100
50	200	200	250	75

FOR 22½° BENDS

PIPE DIAMETER	DEPTH OF BLOCK	X	Y	Z
150	450	550	400	200
100	300	350	300	150
75	250	250	300	100
50	200	200	250	100

FOR ENDCAPS

PIPE DIAMETER	DEPTH OF BLOCK	X	Y	Z
150	600	1000	450	200
100	500	500	300	150
75	400	400	300	125
50	100	100	250	100

STELLENBOSCH
STELLENBOSCH • PNIEL • FRANSCHHOEK
MUNISIPALITEIT • UMASIPALA • MUNICIPALITY

STANDARD DETAIL DRAWING

THRUST BLOCK FOR ENDCAPS,
11¼° AND 22½° BENDS

Scale	Paper Size
N.T.S.	A4

Drawing No.
SW8

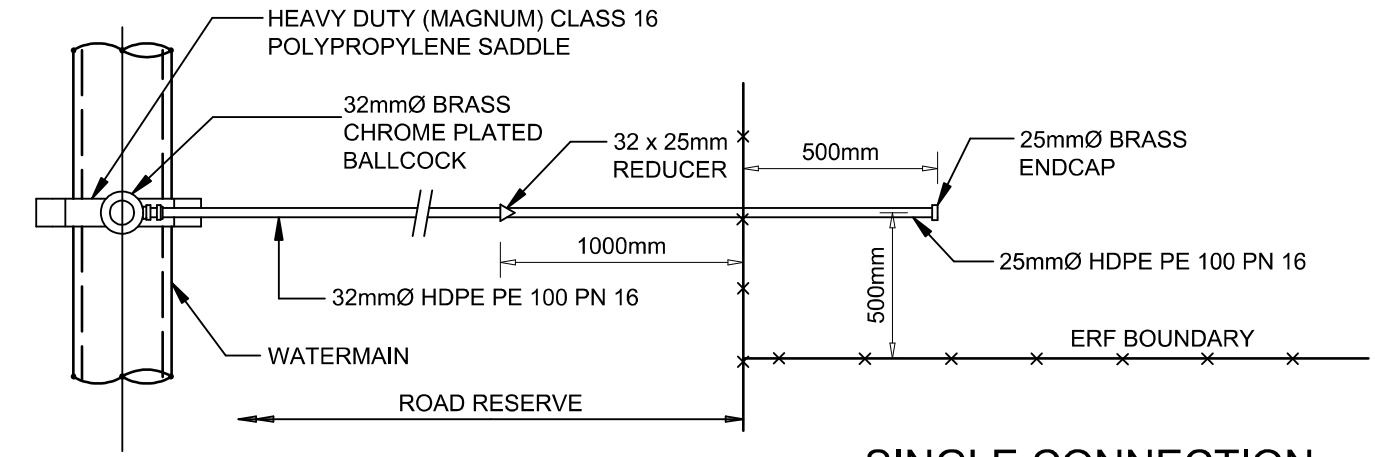

SINGLE CONNECTION

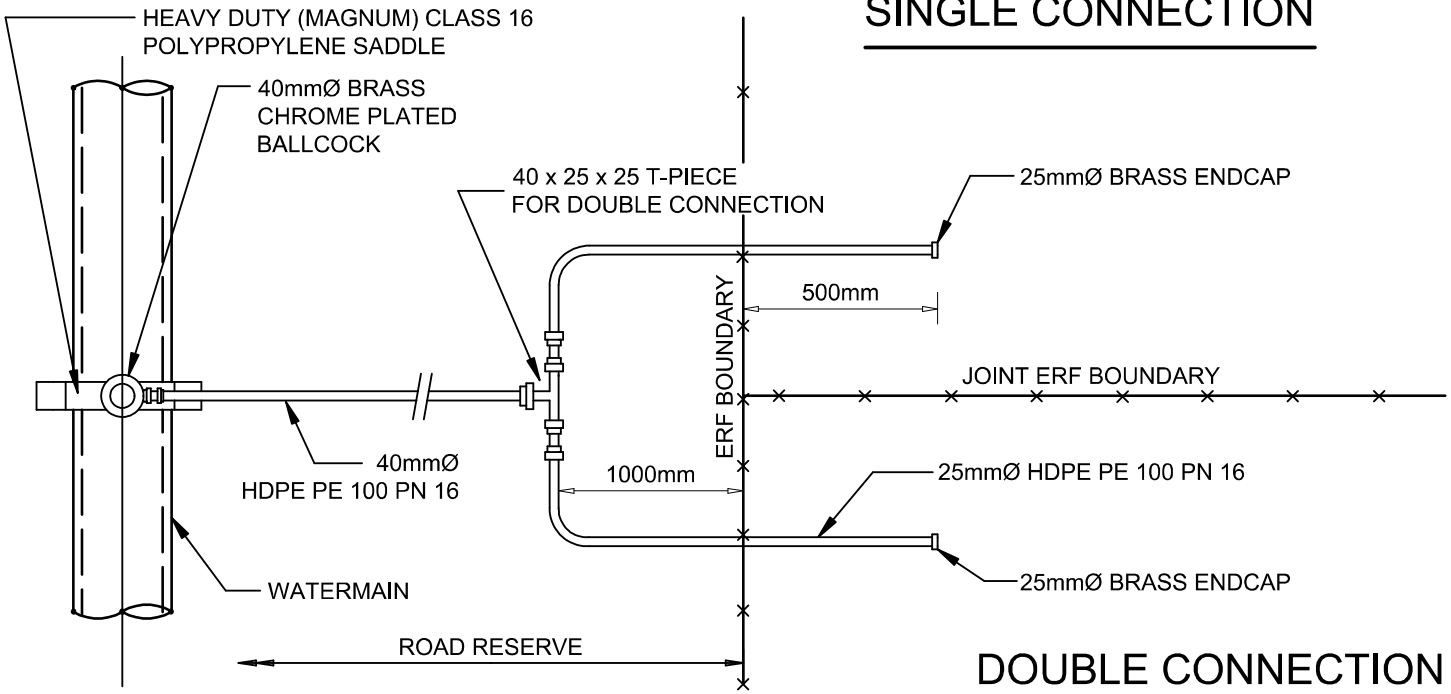

DOUBLE CONNECTION

NOTES

1. ALL PIPE SIZES ARE NOMINAL DIAMETER (DN)
2. BALL VALVES TO BE OPEN AT ALL TIMES.
3. ERF CONNECTIONS MAY ONLY BE COVERED AFTER INSPECTION BY MUNICIPAL REPRESENTATIVES.
4. WATER METERS TO BE INSTALLED IN THE ROAD RESERVE - AS CLOSE AS PRACTICALLY POSSIBLE TO THE ERF BOUNBARY.
5. READ IN CONJUNCTION WITH SECTION B OF DESIGN GUIDLINES AND MINIMUM STANDARDS FOR CIVIL ENGINEERING SERVICES.

500mm
500mm

NOMINAL DIA (DN) VS INSIDE DIA (ID)	
SANS 150 4427 : 1996 PE 100 PN 16	
DN (mm)	ID (mm)
20	15.10
25	20.10
32	25.60
40	32.20
50	40.20

STELLENBOSCH
STELLENBOSCH • PNIEL • FRANSCHHOEK
MUNISIPALITEIT • UMASIPALA • MUNICIPALITY

STANDARD DETAIL DRAWING

TYPICAL ERF CONNECTION : PLAN

Scale	Paper Size
N.T.S.	A4

Drawing No.
SW9

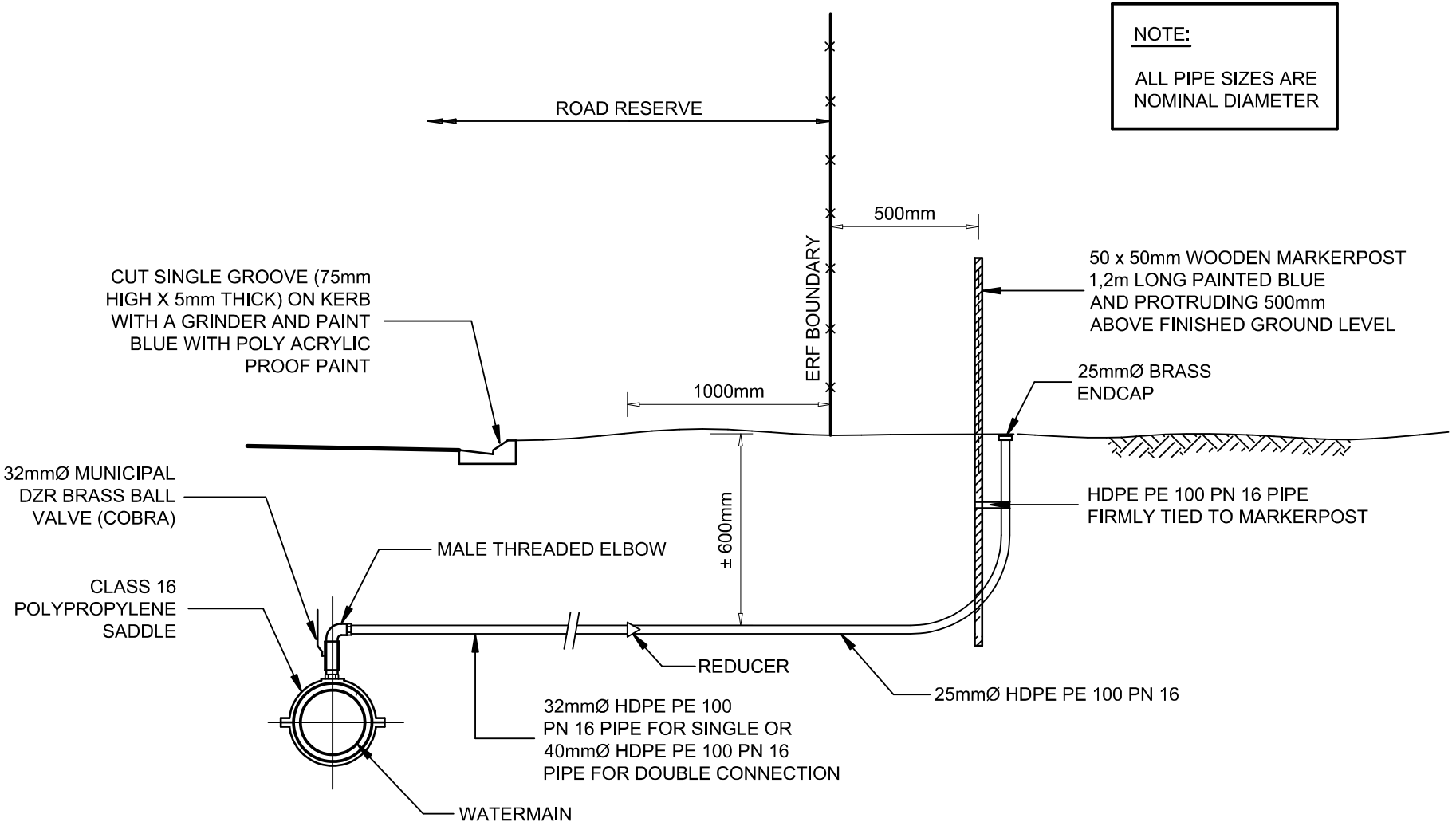

STELLENBOSCH
STELLENBOSCH • PNIEL • FRANSCHHOEK
MUNISIPALITEIT • UMASIPALA • MUNICIPALITY

STANDARD DETAIL DRAWING

TYPICAL ERF CONNECTION : SECTION

Scale	Paper Size
N.T.S.	A4

Drawing No.
SW10

PARTS LIST

ITEM A:	PUDDLE PIECE, FLANGED\ T16
ITEM B:	STRAINER, FLANGED\ T16 [SENSUS]
ITEM C:	SPOOL PIECE, FLANGED\ T16 [BOTH SIDES] WITH PRESSURE NIPPLE & 25mmØ BALL VALVE
ITEM D:	COMBINATION WATER METER, FLANGED\ T16 [SENSUS] [SENSUS, MEITWIN = 80 & 100 mm] [SENSUS, WPVD = 150 mm]
ITEM E:	(AVK SWING CHECK VALVE)*, FLANGED\ PN16\ T16
ITEM F:	FLANGED ADAPTOR, T16
ITEM G:	PUDDLE PIECE, PLAIN & FLANGED ENDED\ T16
ITEM H:	VIKING JOHNSON COUPLING
ITEM J:	600 DIA, LIGHT DUTY, DUCTILE IRON COVER & FRAME [HINGE WITH SNAP LOCK]
ITEM K:	SUMP
ITEM L:	MUNICIPAL VALVE TO BE (AVK TYPE 1)* LEFT HAND CLOSE WITH CAP TOP
ITEM M:	CONSUMER VALVE TO BE (AVK TYPE 1)* RIGHT HAND CLOSE WITH HAND WHEEL
ITEM N:	HINGED DUCTILE IRON : SAINT GOBAIN. SECUREX Z - 600 D (SANS 50124 CLASS D400) OR SIMILAR APPROVED.

* AVK OR SIMILAR APPROVED BY PROJECT ENGINEER

NOTES

NOTE 1:	PLASTIC SHEETING 375 MICRON EMBOSSED D.P.C. SABS 952\1962 TYPE B TO BE PLACED ON WALLS BEFORE PLACING ROOF SLAB IN PLACE AND SEAL INTERNAL AND EXTERNAL JOINTS WITH SIKAFLEX-PRO 2HP
NOTE 2:	CONCRETE GRADE 25\19 FOR FLOOR AND ROOF SLABS
NOTE 3:	AVOID PLACING THE METER CHAMBER IN THE ROAD AND ENTRANCES WHEREVER POSSIBLE
NOTE 4:	CHAMBER WALLS TO BE PLASTERED, EXTERNAL AND INTERNAL, TO PREVENT SEEPAGE OF GROUND WATER INTO MANHOLE (PLASTER 13mm THICK, STEEL TROWELLED TO SMOOTH SURFACE
NOTE 5:	EXTERNAL PLASTERED WALLS TO BE COATED WITH 2 COATS FLINTKOTE [ABE] AND 1 FINAL COAT SILVAKOTE [ABE] AND 1 FINAL COAT SILVAKOTE [ABE] AND INTERNAL PLASTERED WALLS TO BE COATED WITH 3 COATS DURASLURRY [ABE]
NOTE 6:	ALL FLANGES TO BE DRILLED T16
NOTE 7:	VIKING JOHNSON COUPLING TO BE SEALED WITH DENSO TAPE
NOTE 8:	ONLY STAINLESS STEEL 316L SHOULD BE USED FOR BOLTS & NUTS
NOTE 9:	INTERNAL, PIPE PIECES SHALL BE COATED WITH 3 COATS CARBOLINE 891, MINIMUM TOTAL THICKNESS OF 250 MICRON
NOTE 10:	EXTERNAL, PIPE PIECES SHALL BE COATED WITH 3 COATS CARBOLINE 891, MINIMUM TOTAL THICKNESS OF 250 MICRON
NOTE 11:	EXTERNAL, VIKING JOHNSON/ FLANGE ADAPTORE TO BE SEALED WITH DENSO TAPE
NOTE 12:	EXTERNAL BENDS, TEES & FLANGE ADAPTORS SHALL BE COATED WITH 3 COATS CARBOLINE 891, MINIMUM TOTAL THICKNESS OF 250 MICRON

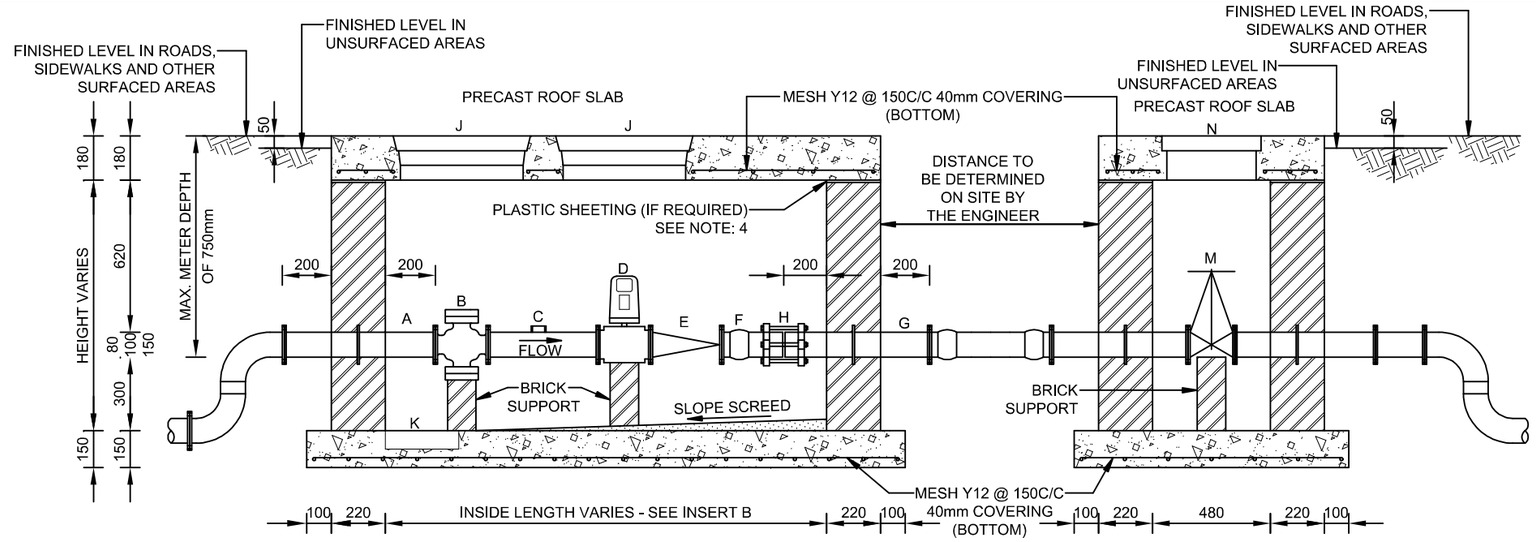

SECTION A - A

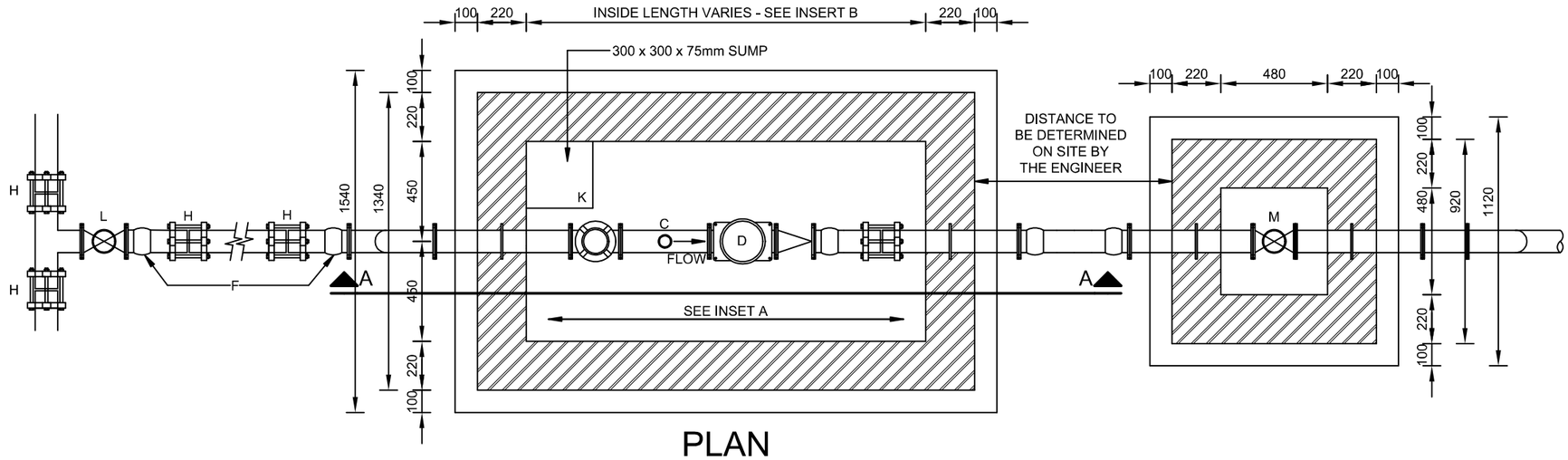

PLAN

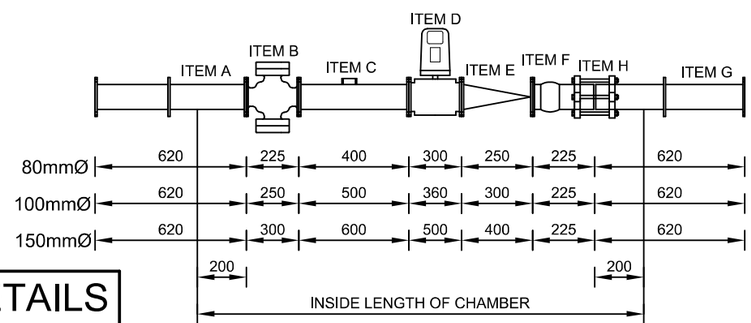

INSET A

CHAMBER DIMENSIONS		FLOOR SLAB	WATER METER
INSIDE DIMS	OUTSIDE DIMS	OUTSIDE DIMS	METER SIZE
1800x900	2240x1340	2440x1540	80mm
2035x900	2475x1340	2675x1540	100mm
2425x900	2865x1340	3065x1540	150mm

INSET B

FOR COVER SLAB DETAILS SEE DRAWING SW12

STELLENBOSCH
STELLENBOSCH • PNIEL • FRANSCHHOEK
MUNISIPALITEIT • UMASIPALA • MUNICIPALITY

STANDARD DETAIL DRAWING

SUPERCEDED - PLEASE OBTAIN LATEST SPECIFICATION FROM MUNICIPALITY

TYPICAL BULK WATER METER CHAMBER (1 OF 2)

Scale	Paper Size
N.T.S.	A3

Drawing No.

SW11

NOTES

NOTE 1: DUCTILE IRON COVER FRAMES TO BE PLACED ABOVE WATER METER & STRAINER

NOTE 2: CUT & BEND MESH TO SUIT COVER OPENING & SUMP

NOTE 3: PROVIDE 4 NO. 40mmØ LIFTING HOLE IN ROOF SLAB [PLUGGED WITH BITUMEN AFTER ROOF SLAB IS IN PLACE TO PREVENT WATER SEEPAGE]

NOTE 4: HINGED DUCTILE IRON : SAINT GOBAIN SECUREX Z - 600 D (SANS 50124 CLASS D400) OR SIMILAR APPROVED

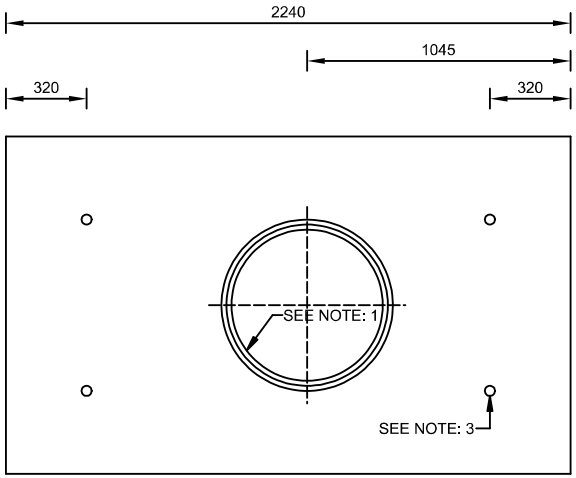

FOR 80mmØ METER

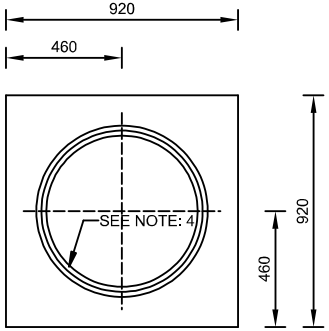

FOR CONSUMER VALVE CHAMBER

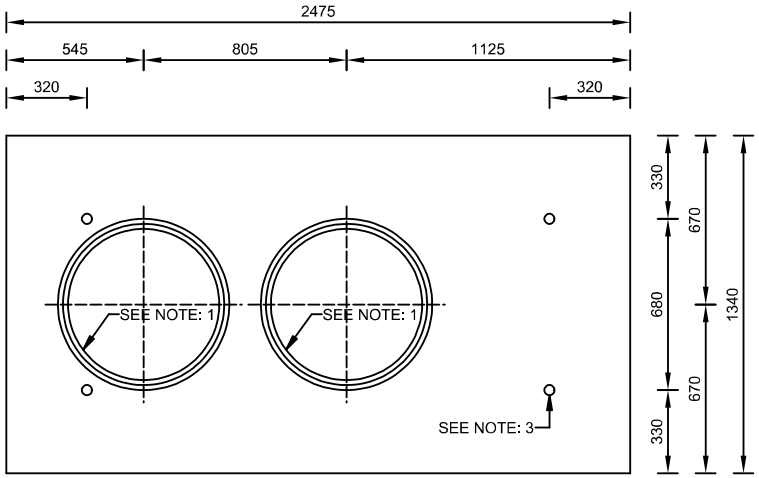

FOR 100mmØ METER

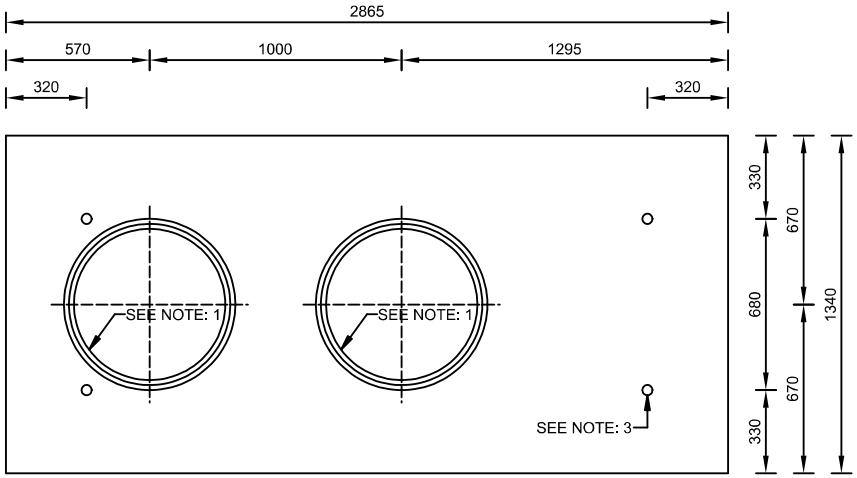

FOR 150mmØ METER

SUPERCEDED - PLEASE OBTAIN LATEST SPECIFICATION FROM MUNICIPALITY

STELLENBOSCH
STELLENBOSCH • PNIEL • FRANSCHHOEK
MUNISIPALITEIT • UMASIPALA • MUNICIPALITY

STANDARD DETAIL DRAWING

Scale	Paper Size
N.T.S.	A4

TYPICAL BULK WATER METER CHAMBER (2 OF 2)

Drawing No.

SW12

NOTES:

1. ALL WORK MUST BE DONE IN ACCORDANCE WITH THE STANDARD SPECIFICATION SABS 1200 AND THE GENERAL CINDITIONS OF CONTRACT FOR THE CONSTRUCTION OF CIVIL ENGINEERING WORKS (2004).
2. ALL MODIFICATIONS TO EXISTING SERVICES AND DEVIATIONS FROM THE DESIGN TO BE AS PER INSTRUCTION FROM THE ENGINEER ONLY.
3. ALL CONCRETE TO BE CLASS 20/19 UNLESS OTHERWISE SPECIFIED.
4. ALL MATERIAL TO BE SUBMITTED TO ENGINEER FOR APPROVAL BY STELLENBOSCH MUNICIPALITY PRIOR TO CONSTRUCTION.
5. DENSO OR APPROVED EQUIVALENT PRODUCTS TO BE USED.
6. DENSO PRIMING SOLUTION TO BE BRUSHED ON TO ALL EXTERNAL PARTS OF COUPLING. BOLTS AND AT LEAST 75mm OF PIPE EITHER SIDE OF COUPLING.
7. DENSO TAPE TO BE MOULDED FIRMLY INTO PLACE AND SMOOTHED OVER BY HAND.

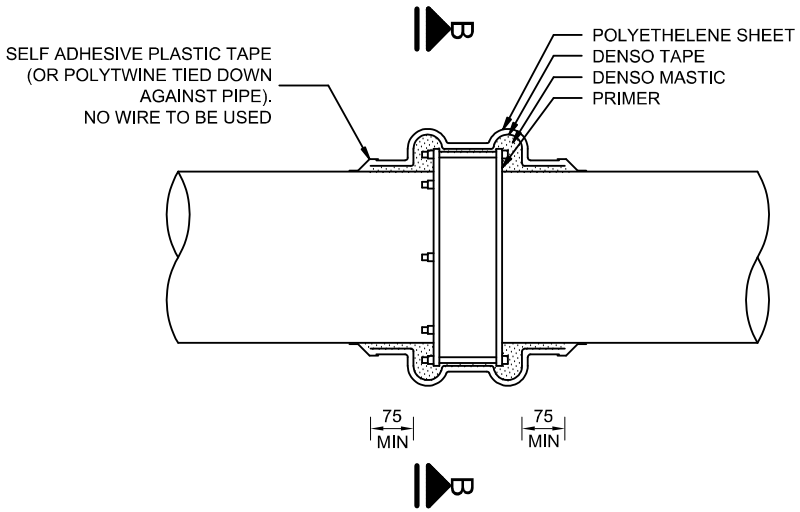

SECTION A - A

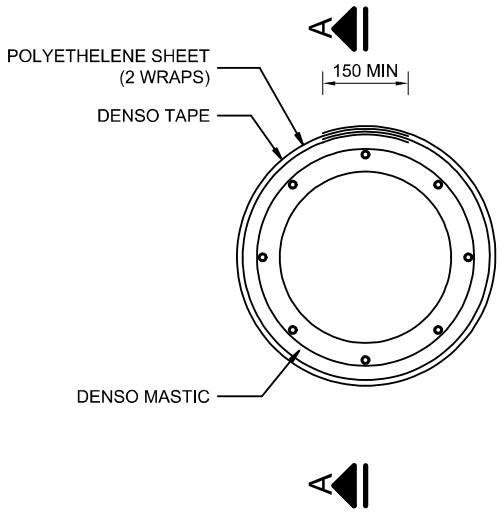

SECTION B - B

STELLENBOSCH
STELLENBOSCH • PNIEL • FRANSCHHOEK
MUNISIPALITEIT • UMASIPALA • MUNICIPALITY

STANDARD DETAIL DRAWING

CORROSION PROTECTION
FOR FLANGES

Scale	Paper Size
N.T.S.	A4

Drawing No.
SW13

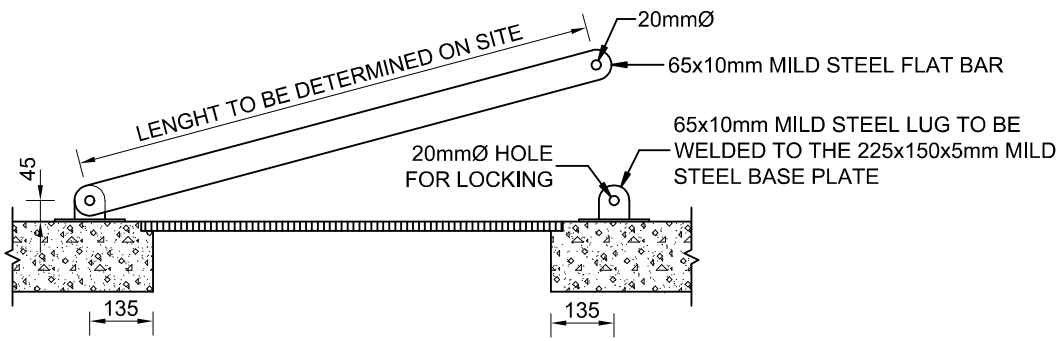

FRONT VIEW

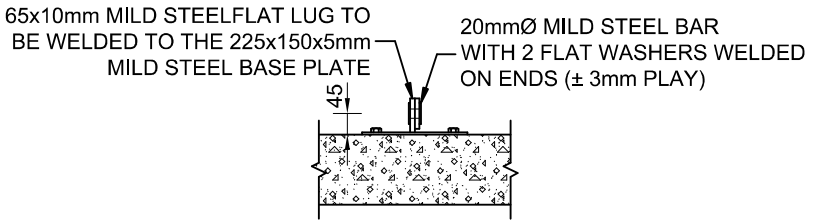

SIDE VIEW

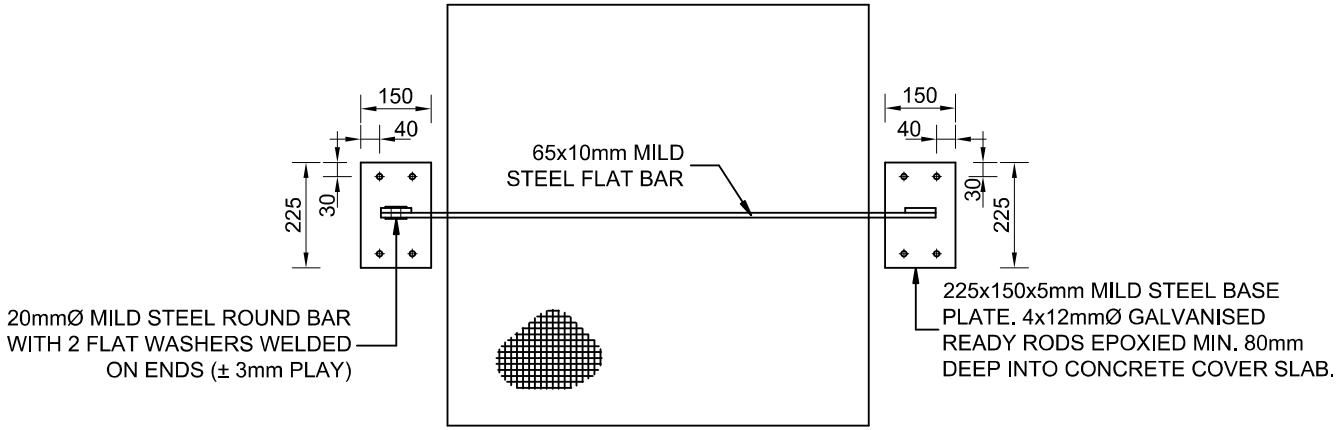

PLAN VIEW

NOTES:

1. ALL STEEL ITEMS SHALL BE, HOT DIP GALVANIZED (HDG) TO SABS EN 10240 AND SABS ISO 1461. WHERE THE HDG IS DAMAGED IT SHALL BE REPAIRED WITH ZINCFIX (OR SIMILAR APPROVED) TO MANUFACTURER'S SPECIFICATIONS.
2. ALL WELDS SHALL BE 6mm FILLET WELDS TO SABS 044.

STELLENBOSCH
STELLENBOSCH • PNIEL • FRANSCHHOEK
MUNISIPALITEIT • UMASIPALA • MUNICIPALITY

STANDARD DETAIL DRAWING

LOCKING BAR DETAIL

Scale	Paper Size
N.T.S.	A4

Drawing No.
SW14

NOTE:

STEP IRONS AT 300mm c/c
STAGGERED LEFT AND RIGHT

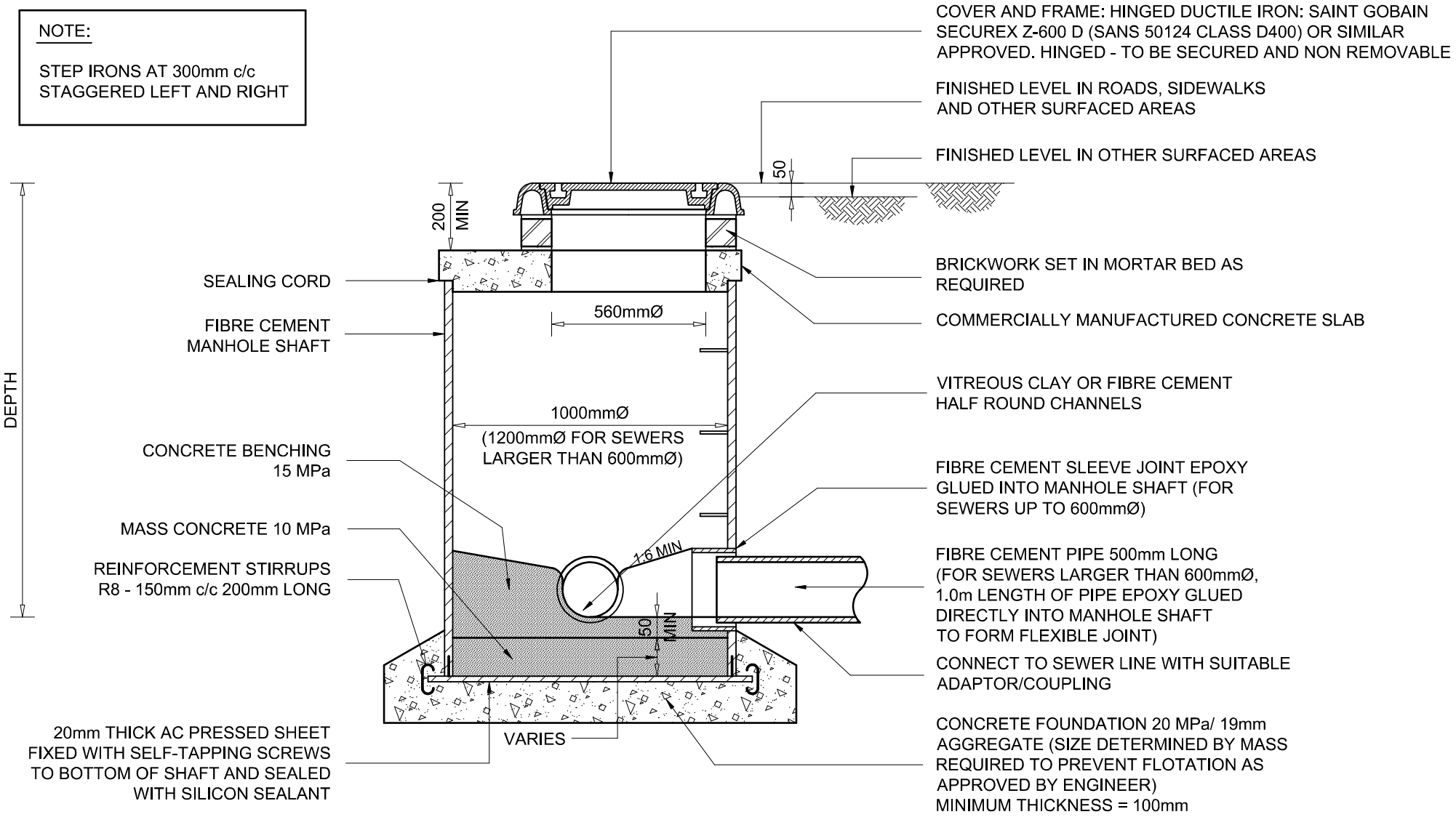

STELLENBOSCH
STELLENBOSCH • PNIEL • FRANSCHHOEK
MUNISIPALITEIT • UMASIPALA • MUNICIPALITY

STANDARD DETAIL DRAWING

Scale	Paper Size
1 : 20	A4

SEWER MANHOLE : FIBRE CEMENT

Drawing No.
SS1

NOTE:

THE PREFERRED MANHOLE TYPE IS THE PRECAST FIBRE CEMENT TYPE (DRAWING NO. SS1). USE OF THE PRECAST CONCRETE MANHOLE IS TO BE APPROVED BY THE WATER SERVICES DEPARTMENT.

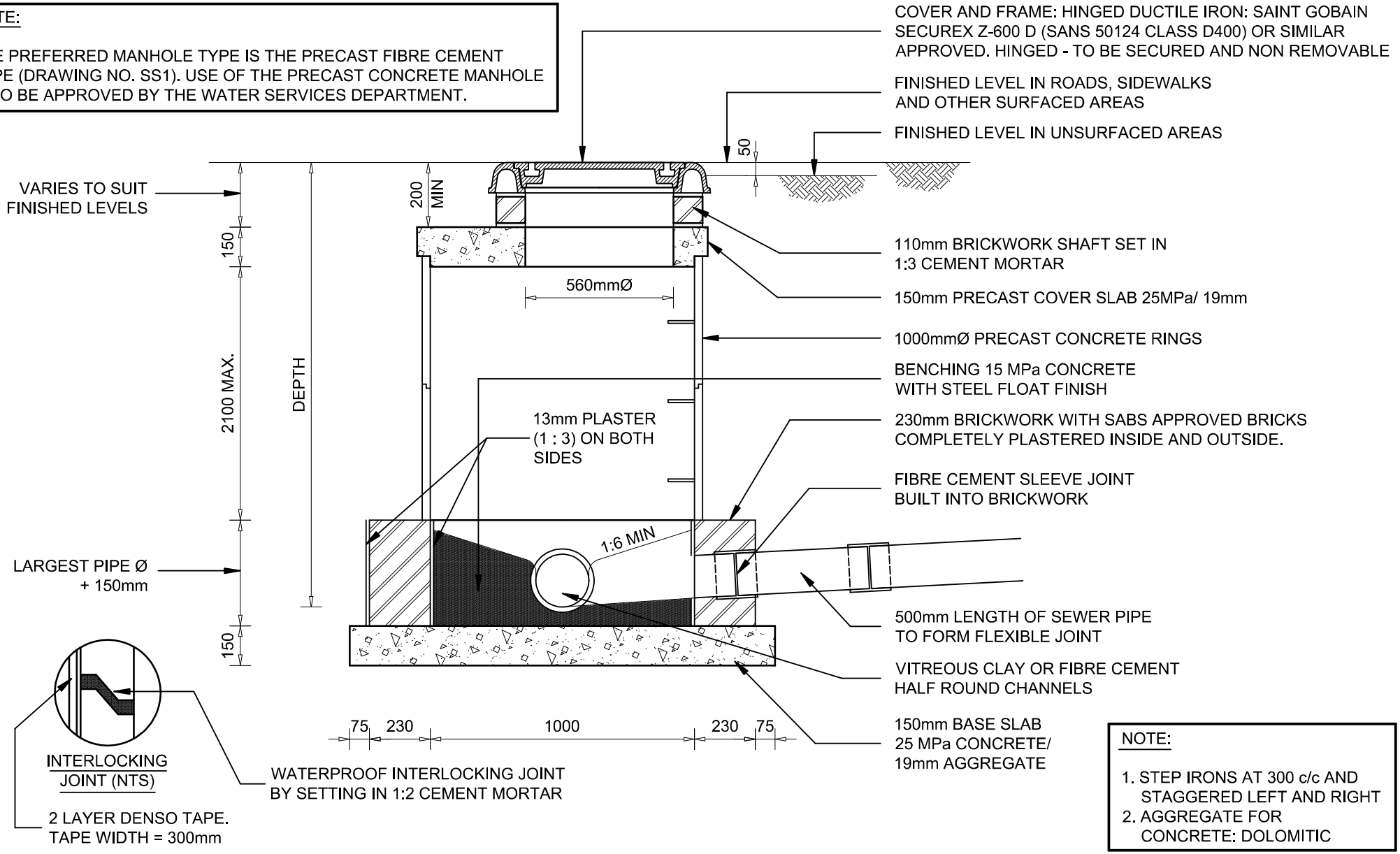

NOTE:

1. STEP IRONS AT 300 c/c AND STAGGERED LEFT AND RIGHT
2. AGGREGATE FOR CONCRETE: DOLOMITIC

STELLENBOSCH
STELLENBOSCH • PNIEL • FRANSCHHOEK
MUNISIPALITEIT • UMASIPALA • MUNICIPALITY

STANDARD DETAIL DRAWING

Scale	Paper Size
1 : 20	A4

SEWER MANHOLE : PRECAST CONCRETE

Drawing No.
SS2

NOTE:

THE PREFERRED MANHOLE TYPE IS THE PRECAST FIBRE CEMENT TYPE (DRAWING NO. SS1). USE OF THE BRICK MANHOLE TO BE APPROVED BY THE WATER SERVICES DEPARTMENT

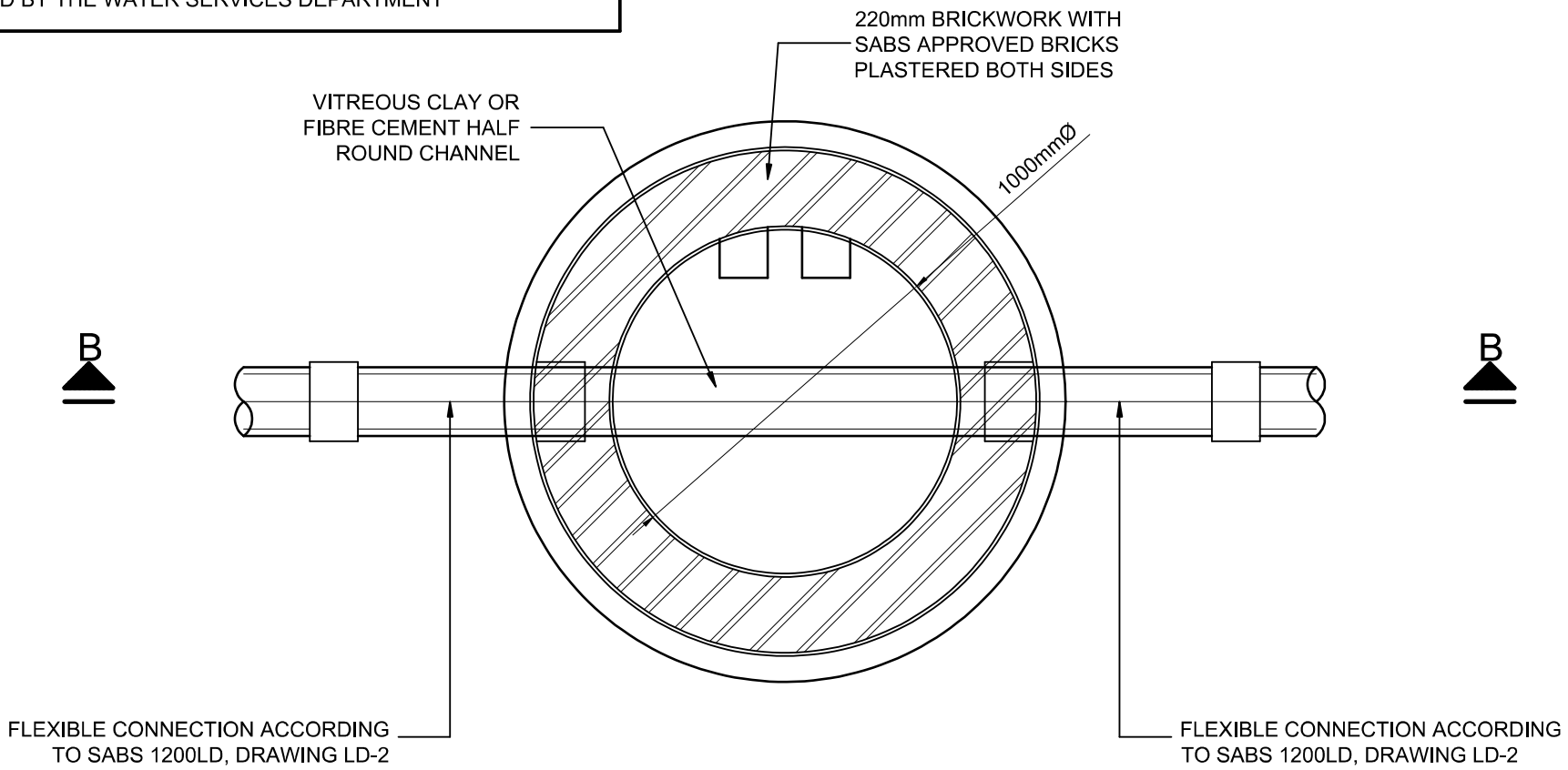

SECTIONAL PLAN A - A

STELLENBOSCH
STELLENBOSCH • PNIEL • FRANSCHHOEK
MUNISIPALITEIT • UMASIPALA • MUNICIPALITY

STANDARD DETAIL DRAWING

SEWER MANHOLE : BRICK - PLAN (1 OF 3)

Scale	Paper Size
1 : 10	A4

Drawing No.

SS3

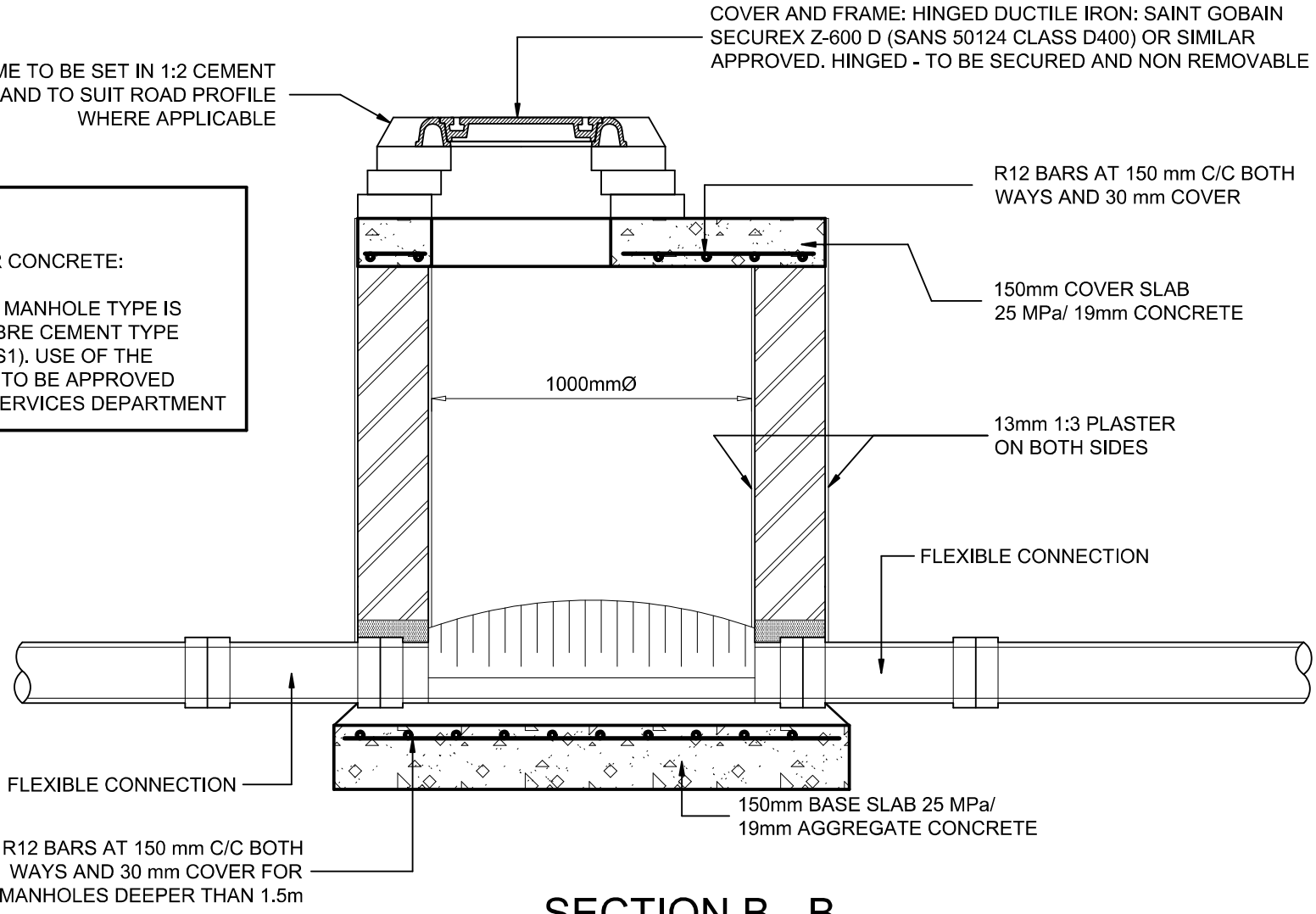

NOTE:

1. AGGREGATE FOR CONCRETE: DOLOMITIC
2. THE PREFERRED MANHOLE TYPE IS THE PRECAST FIBRE CEMENT TYPE (DRAWING NO. SS1). USE OF THE BRICK MANHOLE TO BE APPROVED BY THE WATER SERVICES DEPARTMENT

SECTION B - B

STELLENBOSCH
STELLENBOSCH • PNIEL • FRANSCHHOEK
MUNISIPALITEIT • UMASIPALA • MUNICIPALITY

STANDARD DETAIL DRAWING

SEWER MANHOLE : BRICK - SECTION BB (2 OF 3)

Scale	Paper Size
1 : 10	A4

Drawing No.
SS4

NOTES:

1. STEP IRONS(POLYMERIC POLYPROPYLENE WITH A 12mm DIA HIGH TENSILE STRENTH STEEL CORE), IF REQUIRED, TO BE PLACED AT 300mm CENTRES AND STAGGERED LEFT AND RIGHT
2. THE PREFERRED MANHOLE TYPE IS THE PRECAST FIBRE CEMENT TYPE (DRAWING NO. SS1). USE OF THE BRICK MANHOLE TO BE APPROVED BY THE WATER SERVICES DEPARTMENT.

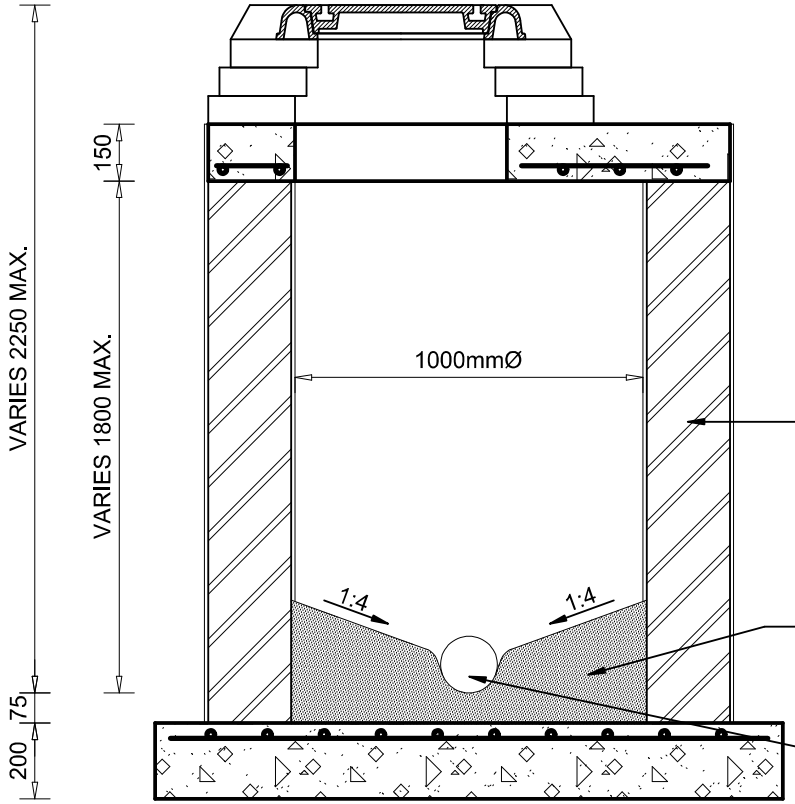

220mm BRICKWORK WITH SABS APPROVED BRICKS

BENCHING GRADE 15 CONCRETE² STEEL FLOAT FINISHED WITH 20mm 1:3 CEMENT MORTAR

VITREOUS CLAY OR FIBRE CEMENT HALF ROUND CHANNELS

SECTION C - C

STELLENBOSCH
STELLENBOSCH • PNIEL • FRANSCHHOEK
MUNISIPALITEIT • UMASIPALA • MUNICIPALITY

STANDARD DETAIL DRAWING

SEWER MANHOLE : BRICK - SECTION CC (3 OF 3)

Scale	Paper Size
1 : 10	A4

Drawing No.
SS5

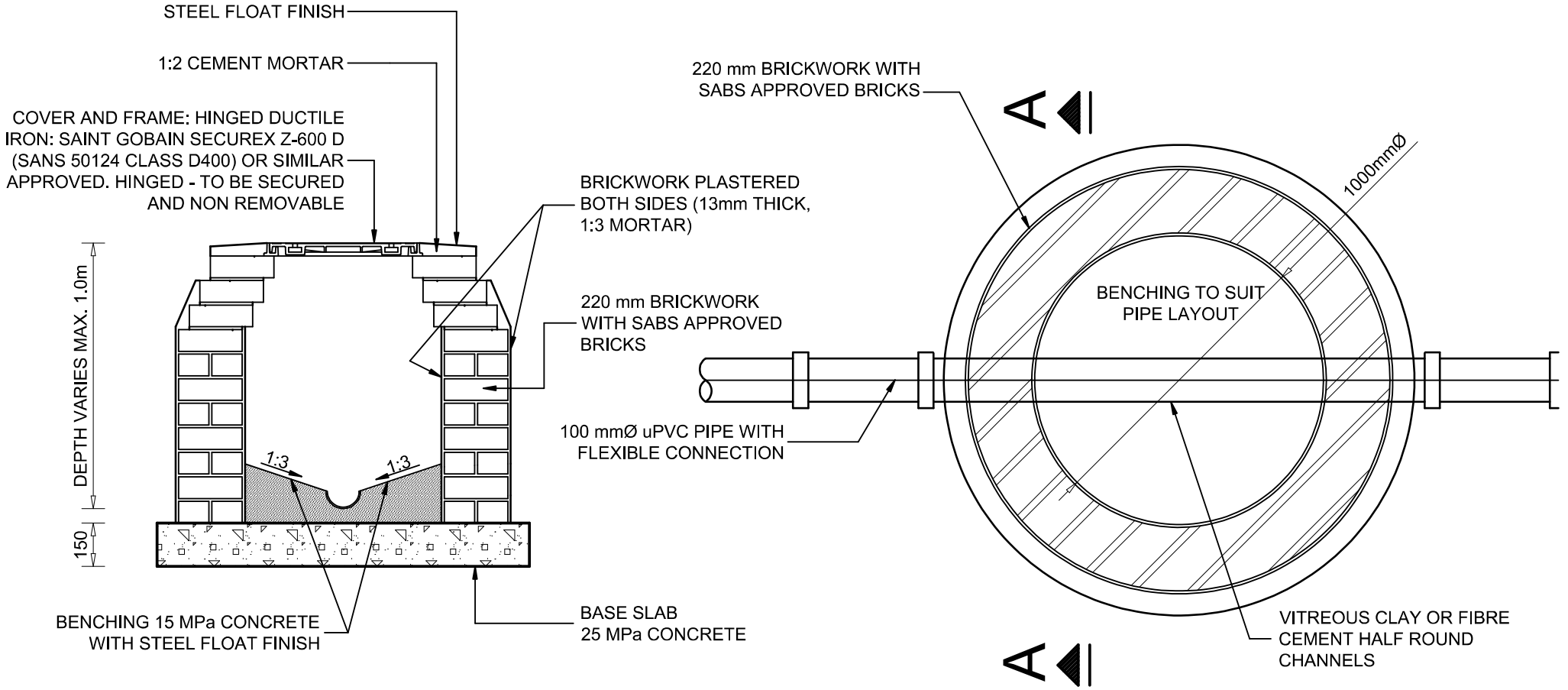

SECTION A - A

PLAN LAYOUT

STELLENBOSCH
STELLENBOSCH • PNIEL • FRANSCHHOEK
MUNISIPALITEIT • UMASIPALA • MUNICIPALITY

STANDARD DETAIL DRAWING

Scale	Paper Size
1 : 10	A4

Drawing No.

BRICK MANHOLE FOR SHALLOW SEWERS

SS6

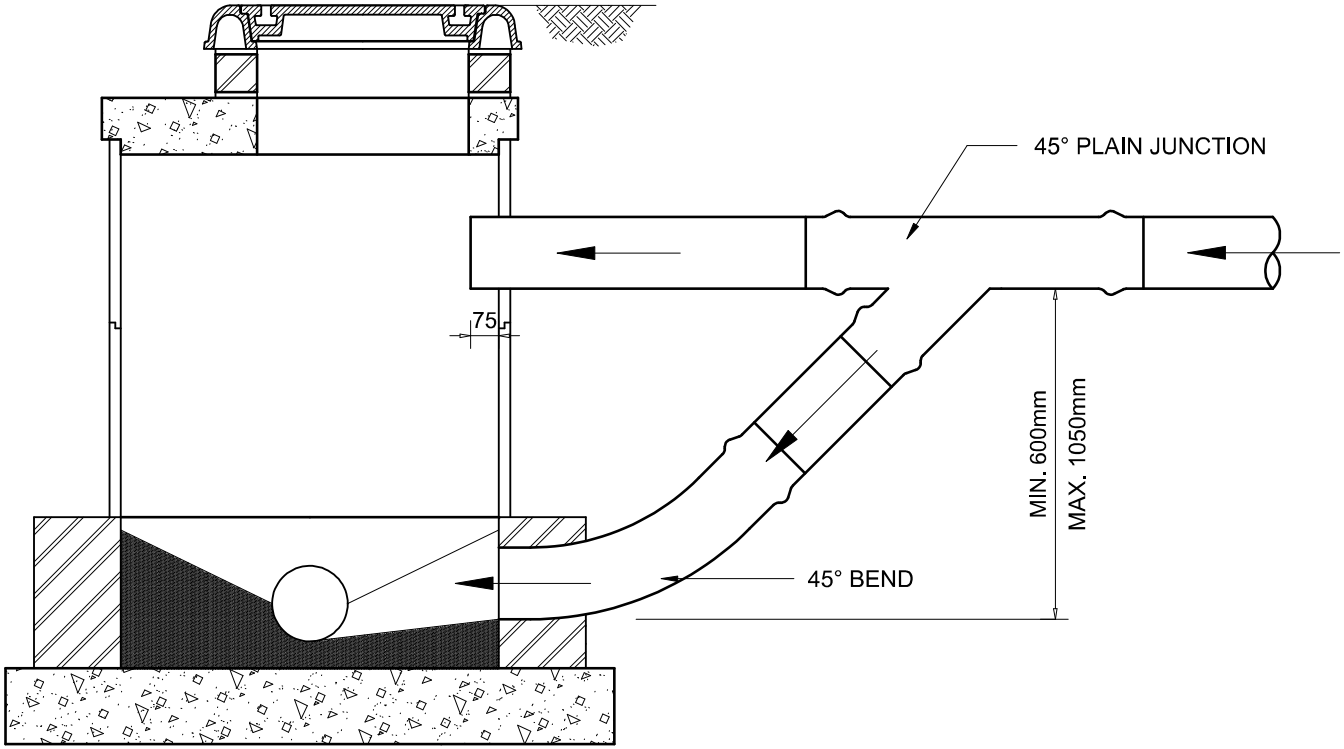

STELLENBOSCH
STELLENBOSCH • PNIEL • FRANSCHHOEK
MUNISIPALITEIT • UMASIPALA • MUNICIPALITY

STANDARD DETAIL DRAWING

Scale	Paper Size
1 : 20	A4

SEWER MANHOLE WITH BACKDROP : TYPE 1

Drawing No.
SS7

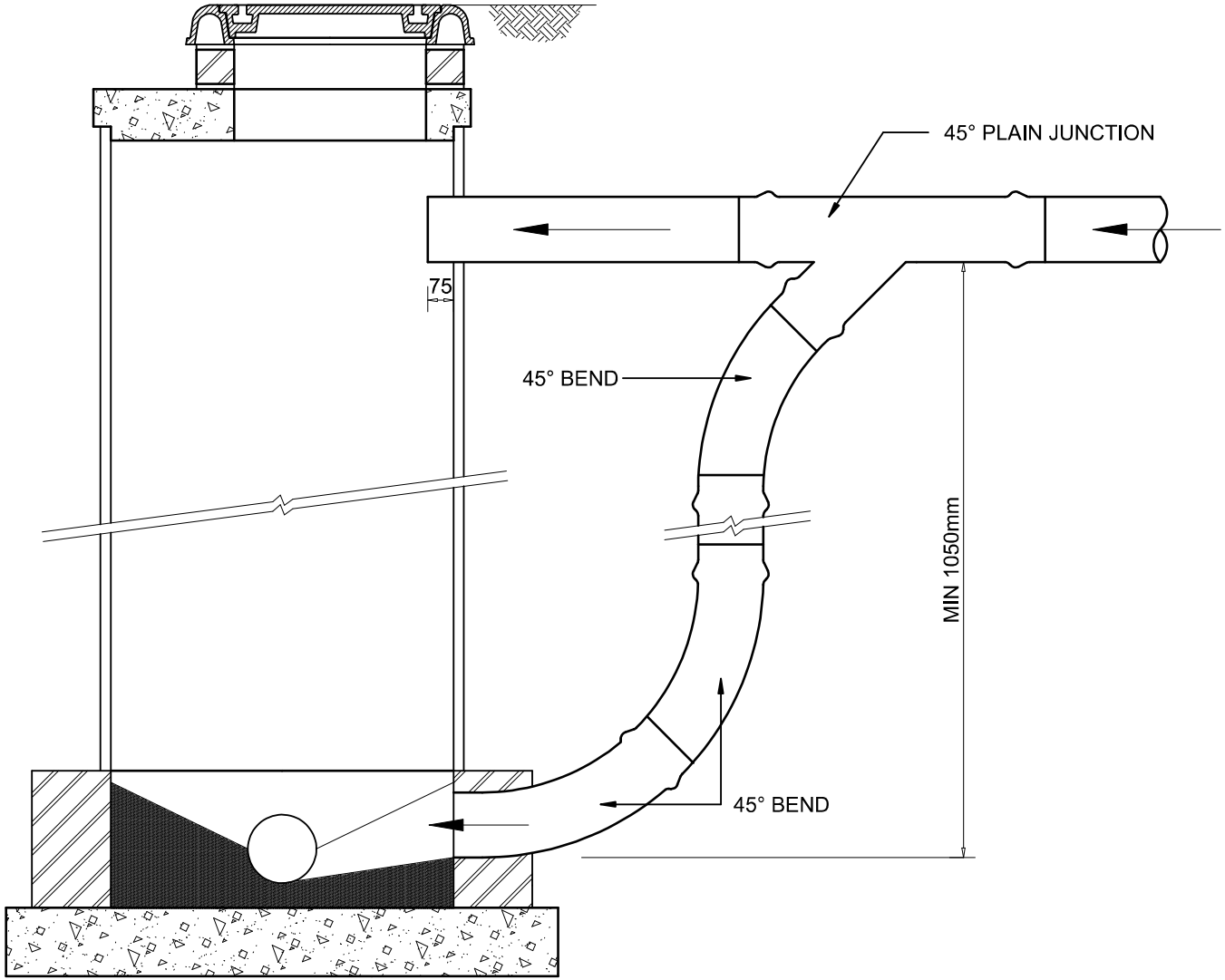

STELLENBOSCH
STELLENBOSCH • PNIEL • FRANSCHHOEK
MUNISIPALITEIT • UMASIPALA • MUNICIPALITY

STANDARD DETAIL DRAWING

Scale	Paper Size
1 : 20	A4

SEWER MANHOLE WITH BACKDROP : TYPE 2

Drawing No.
SS8

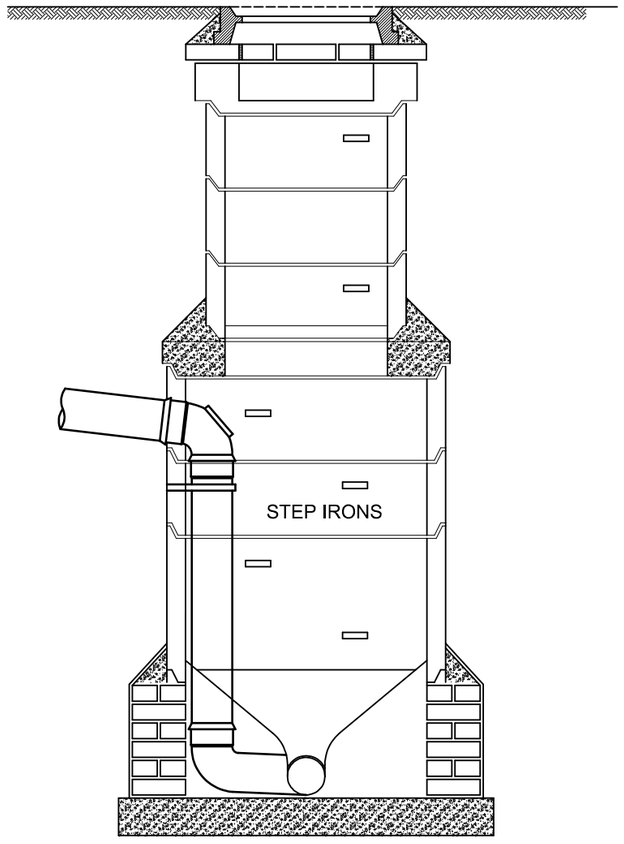

BACKDROP 1.2m DEEP AND MORE
(PRECAST CONCRETE RINGS)

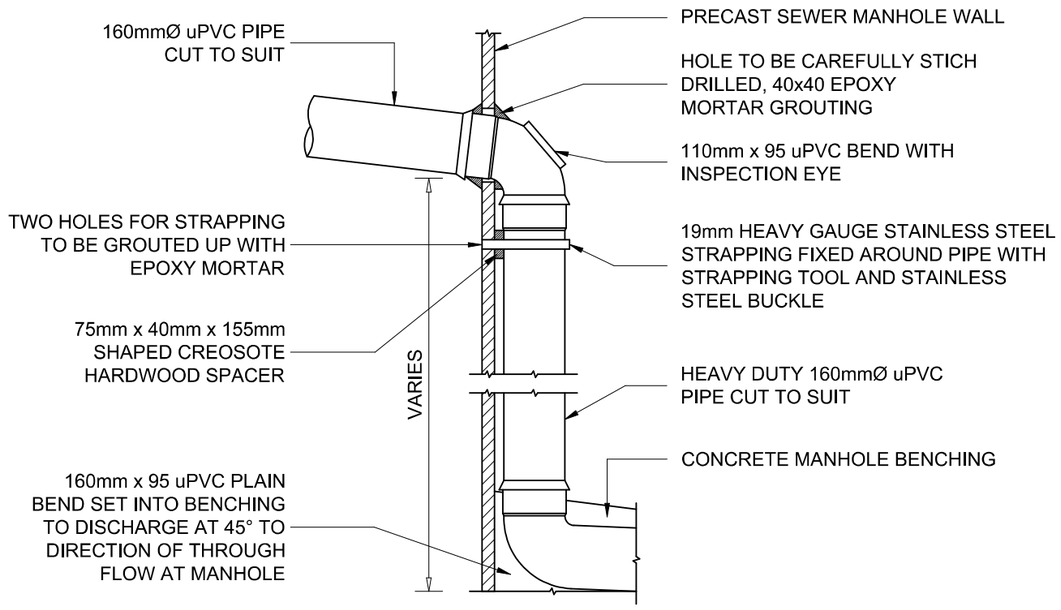

ELEVATION

PIPE FITTING DETAILS

NOTES:

1. PIPE SOFFIT LEVELS IN MANHOLE TO BE EQUAL EXCEPT WHERE OTHERWISE SHOWN.
2. MATERIAL AROUND BACKDROP PIPEWORK TO BE COMPACTED TO 93% MOD.AASHTO. (100% FOR SAND).
3. ALL BACKDROPS 600mm AND LESS TO BE MADE GOOD BY BENCHING.

STELLENBOSCH
STELLENBOSCH • PNIEL • FRANSCHHOEK
MUNISIPALITEIT • UMASIPALA • MUNICIPALITY

STANDARD DETAIL DRAWING

SEWER MANHOLE WITH BACKDROP : TYPE 3 (INTERNAL BACKDROP)

Scale	Paper Size
N.T.S.	A3

Drawing No.
SS9

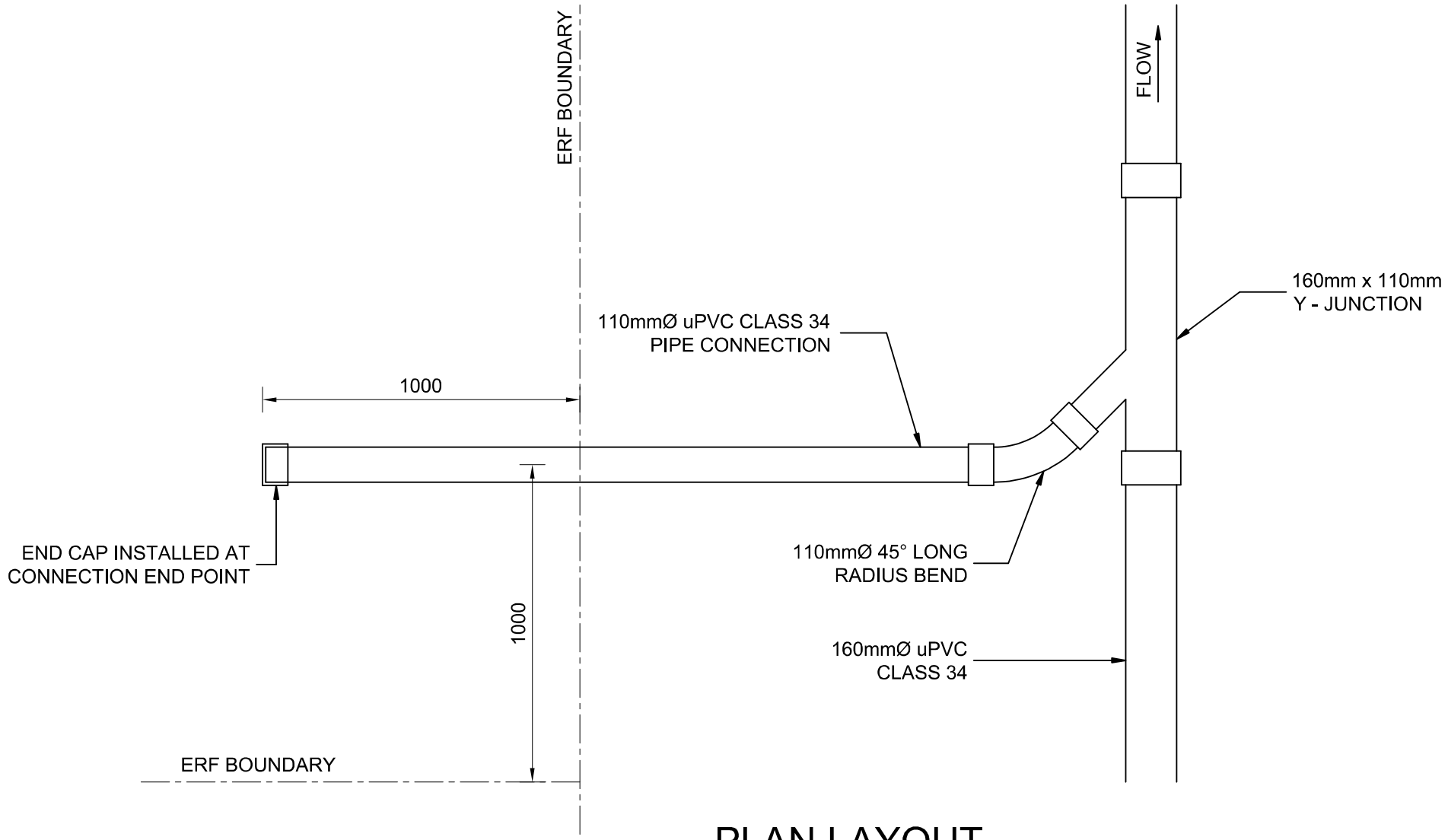

PLAN LAYOUT

STELLENBOSCH
STELLENBOSCH • PNIEL • FRANSCHHOEK
MUNISIPALITEIT • UMASIPALA • MUNICIPALITY

STANDARD DETAIL DRAWING

SEWER ERF CONNECTION LAYOUT

Scale	Paper Size
N.T.S.	A4

Drawing No.
SS10

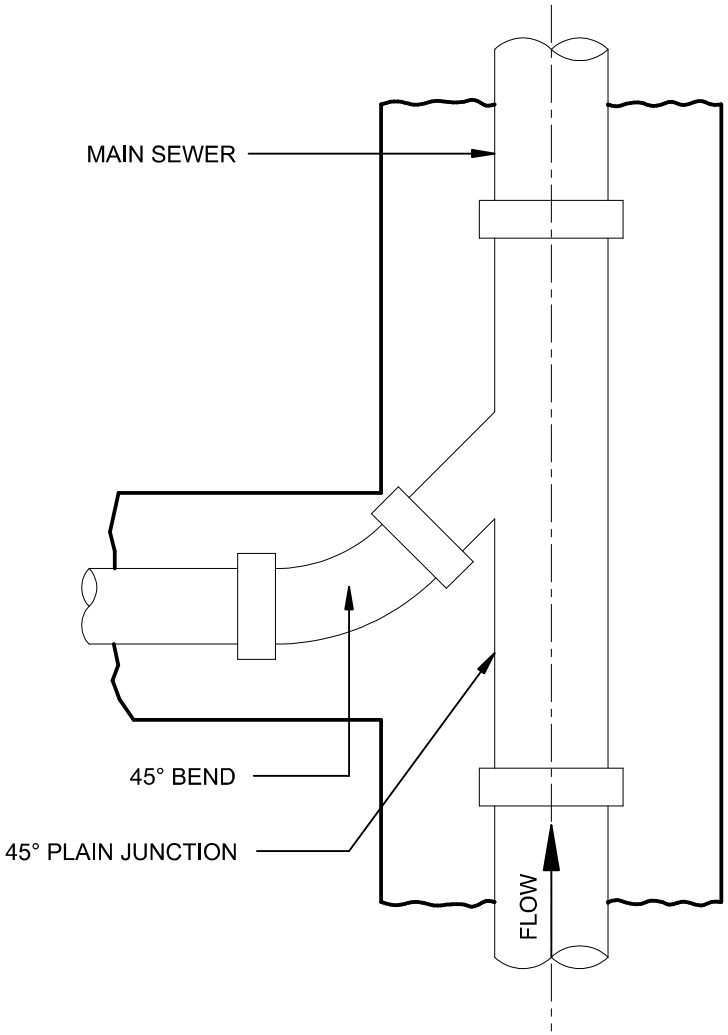

PLAN

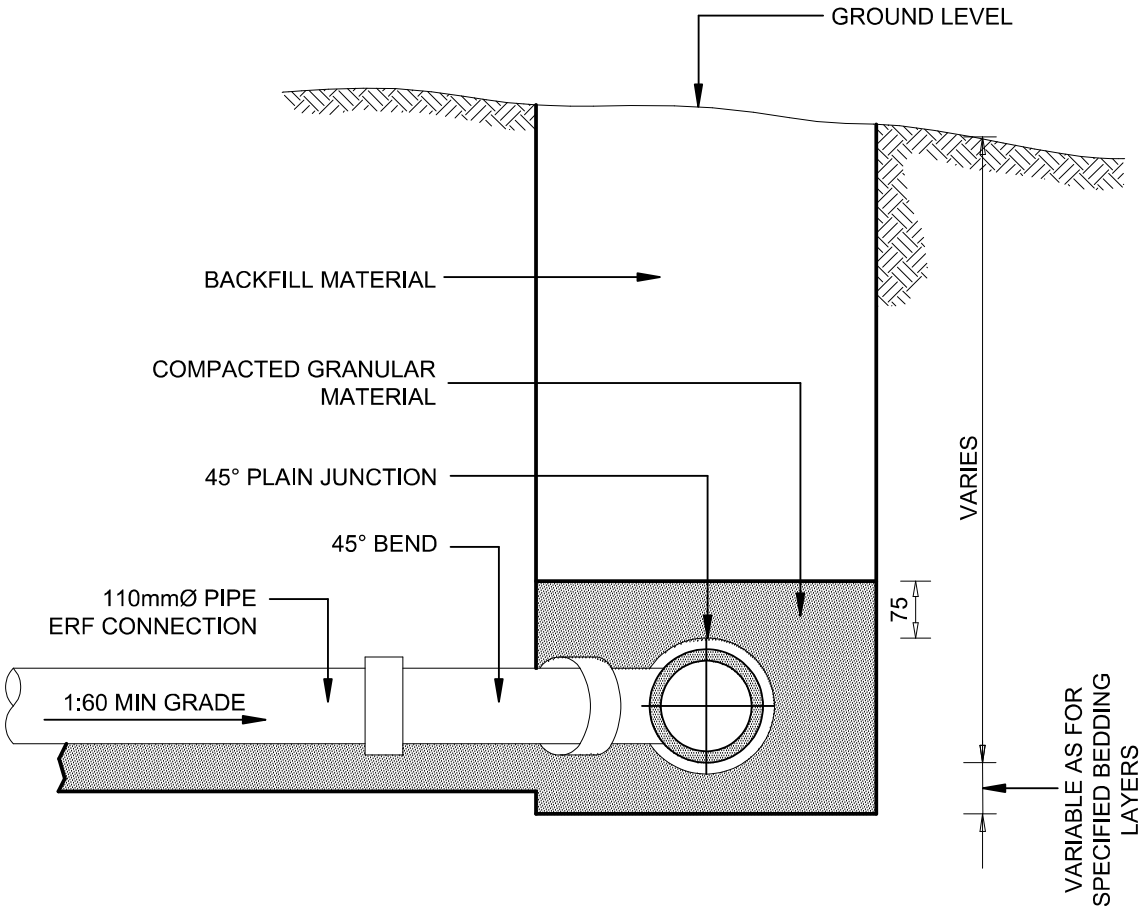

SECTIONAL ELEVATION

STELLENBOSCH
STELLENBOSCH • PNIEL • FRANSCHHOEK
MUNISIPALITEIT • UMASIPALA • MUNICIPALITY

STANDARD DETAIL DRAWING

SEWER ERF CONNECTION : TYPE 1

Scale	Paper Size
1 : 10	A4

Drawing No.

SS11

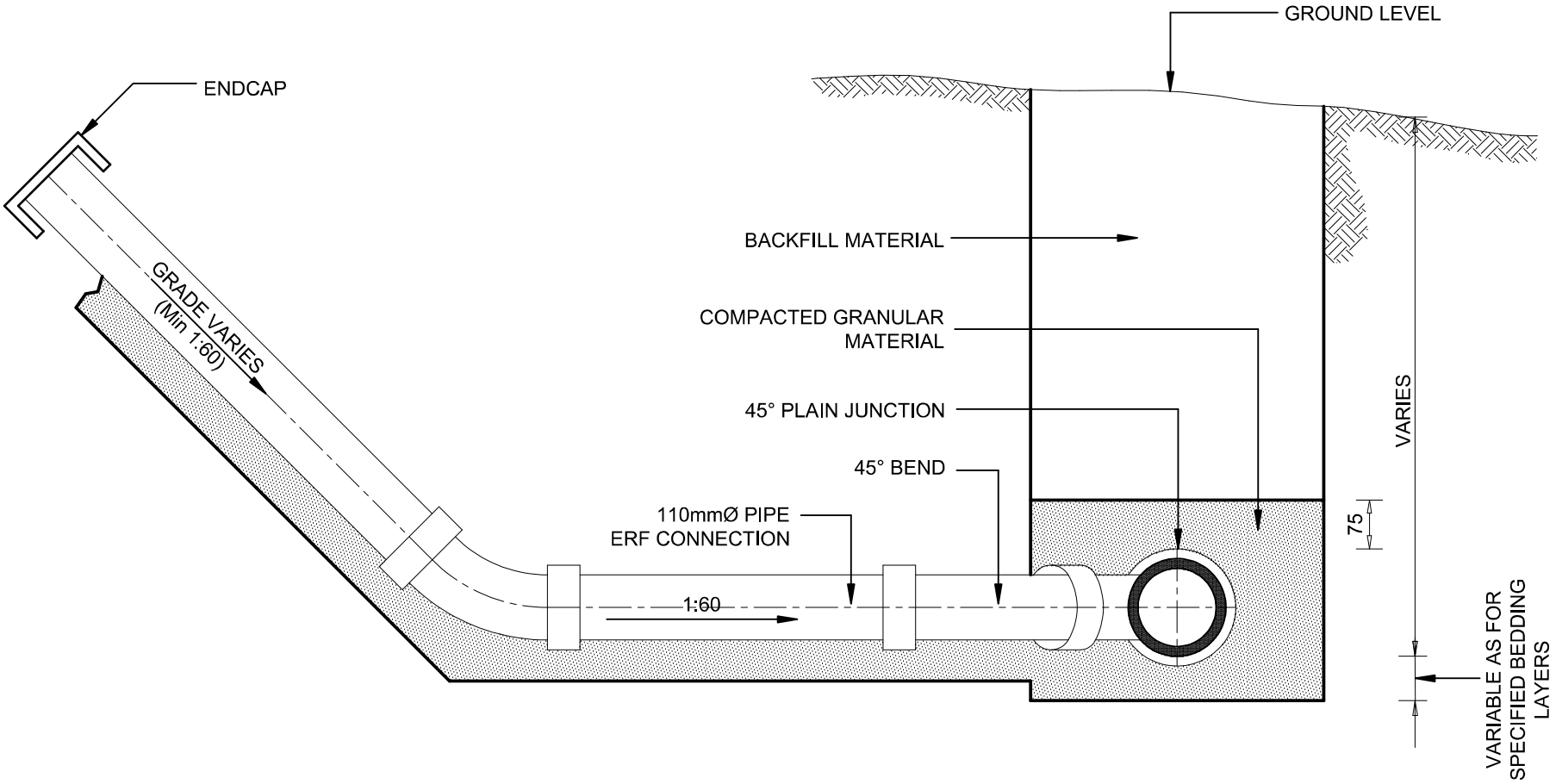

STELLENBOSCH
STELLENBOSCH • PNIEL • FRANSCHHOEK
MUNISIPALITEIT • UMASIPALA • MUNICIPALITY

STANDARD DETAIL DRAWING

SEWER ERF CONNECTION : TYPE 2

Scale	Paper Size
1 : 10	A4

Drawing No.
SS12

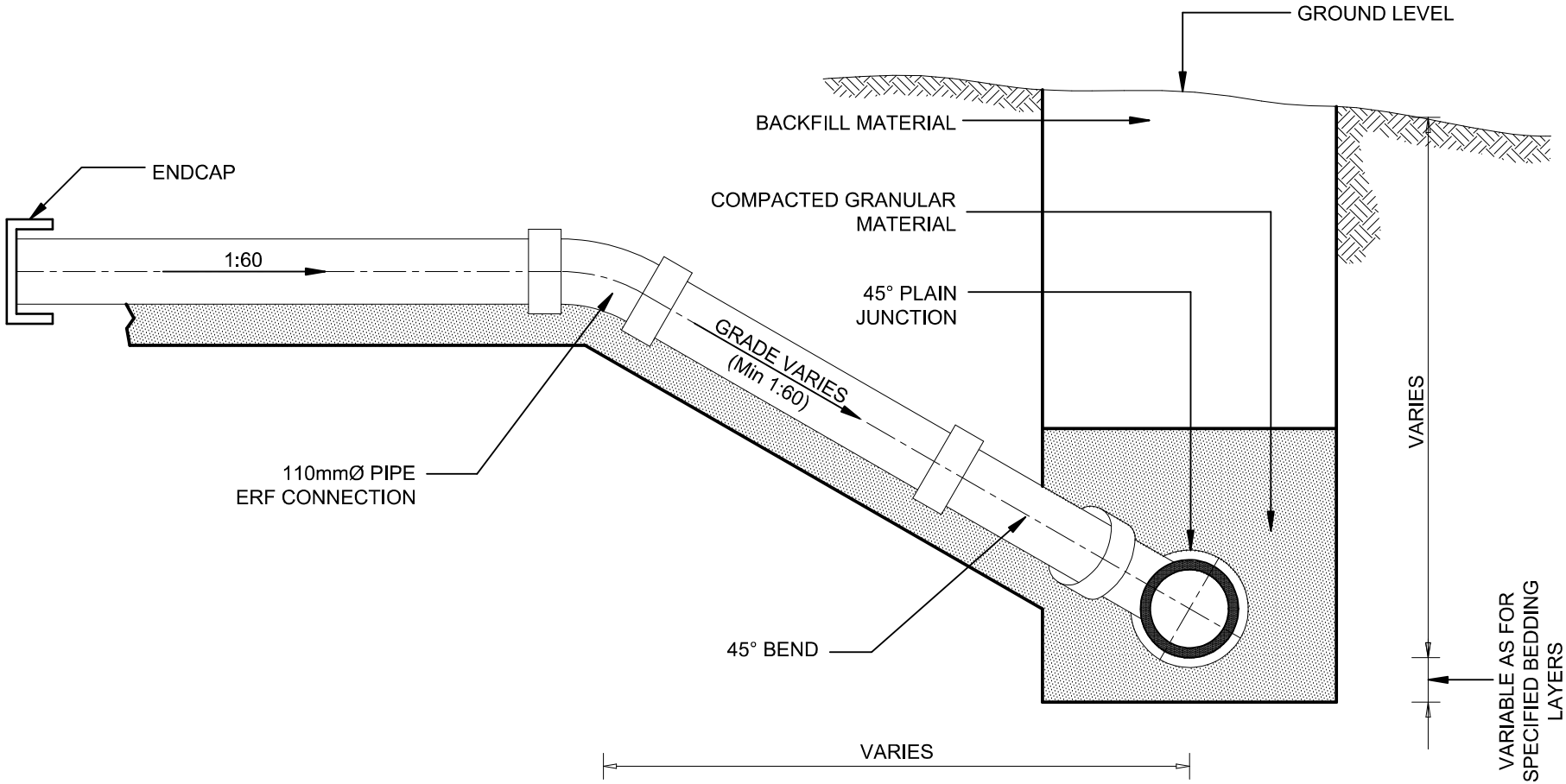

STELLENBOSCH
STELLENBOSCH • PNIEL • FRANSCHHOEK
MUNISIPALITEIT • UMASIPALA • MUNICIPALITY

STANDARD DETAIL DRAWING

SEWER ERF CONNECTION : TYPE 3

Scale	Paper Size
1 : 10	A4

Drawing No.
SS13

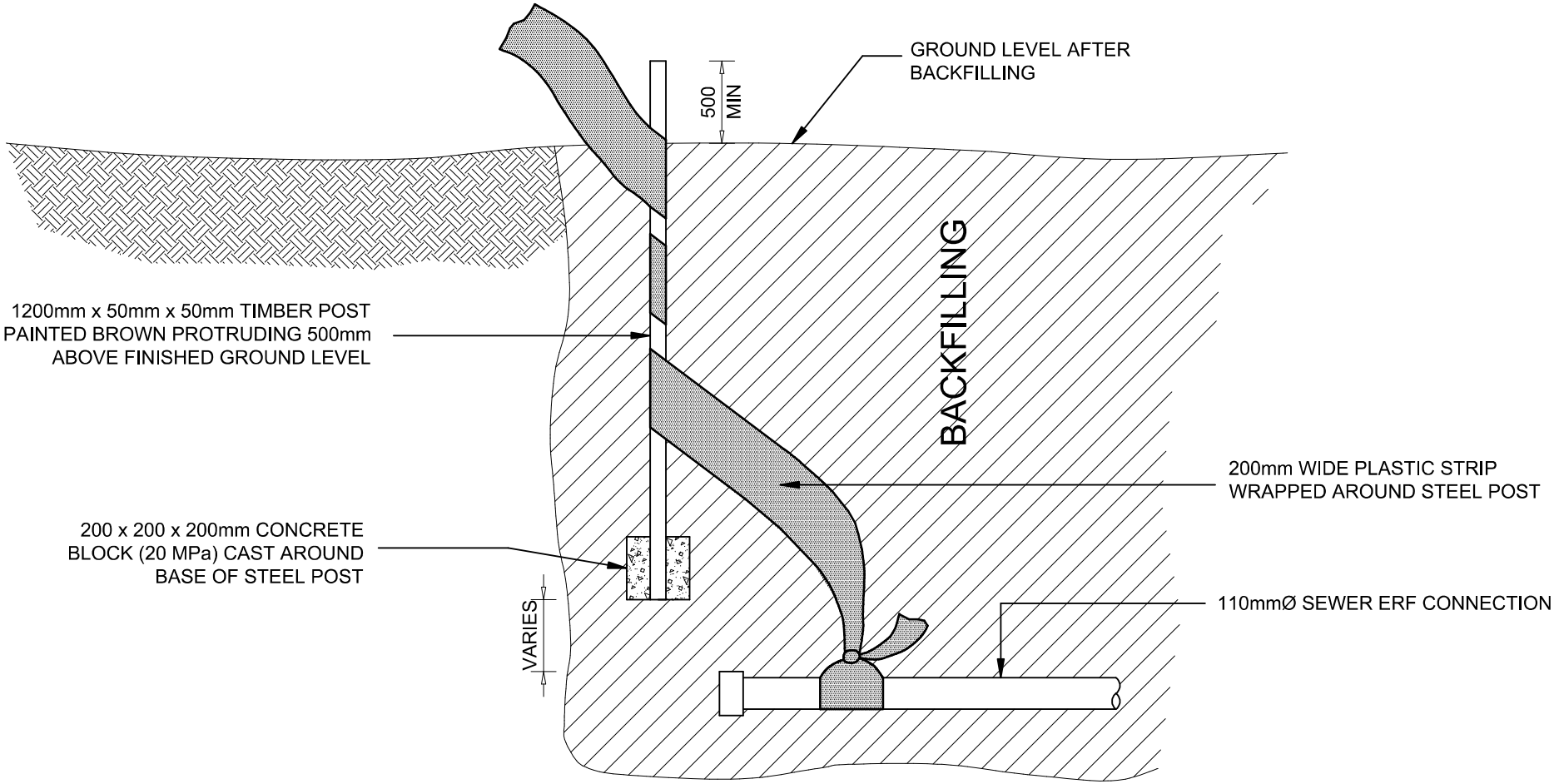

STELLENBOSCH
STELLENBOSCH • PNIEL • FRANSCHHOEK
MUNISIPALITEIT • UMASIPALA • MUNICIPALITY

STANDARD DETAIL DRAWING

Scale	Paper Size
1 : 10	A4

MARKER POST FOR SEWER ERF CONNECTION

Drawing No.
SS14

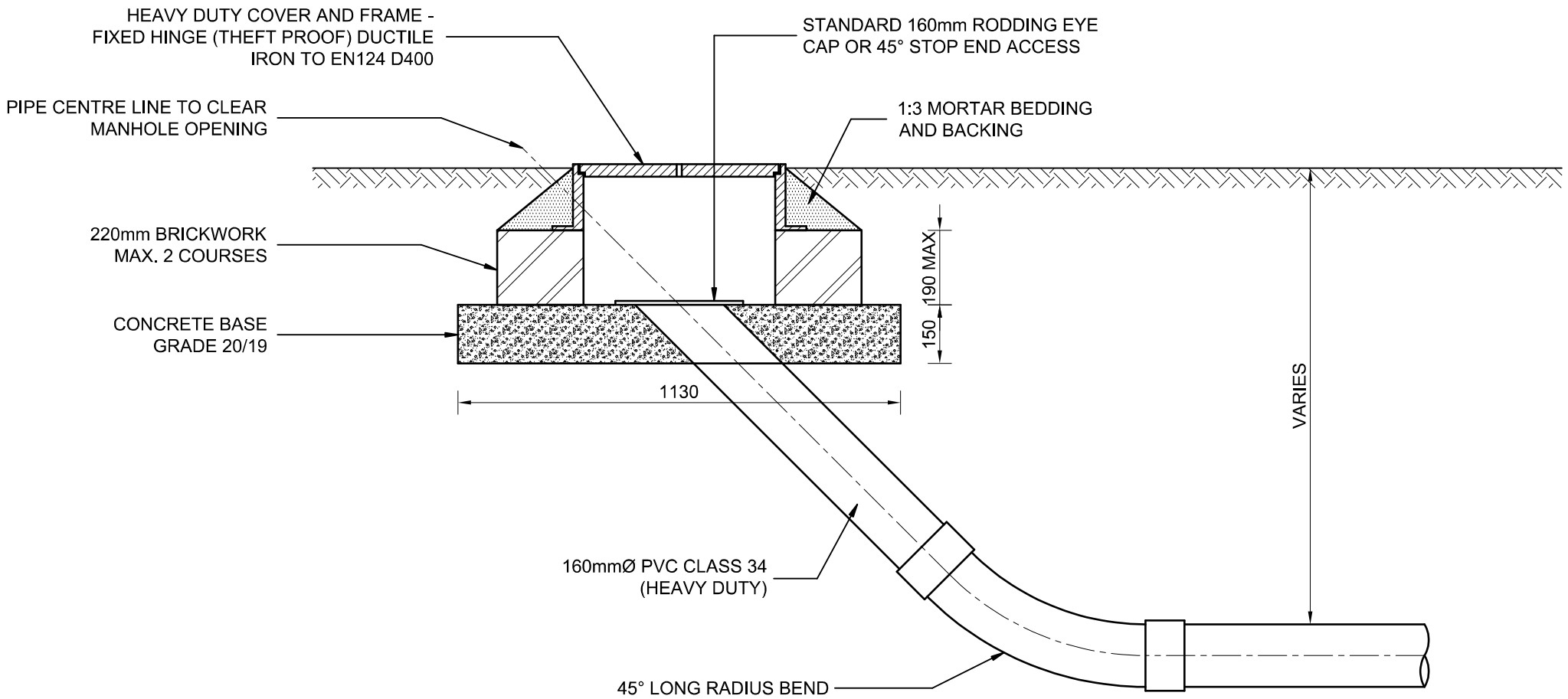

STELLENBOSCH
STELLENBOSCH • PNIEL • FRANSCHHOEK
MUNISIPALITEIT • UMASIPALA • MUNICIPALITY

STANDARD DETAIL DRAWING

RODDING EYE

Scale	Paper Size
N.T.S.	A4

Drawing No.
SS15

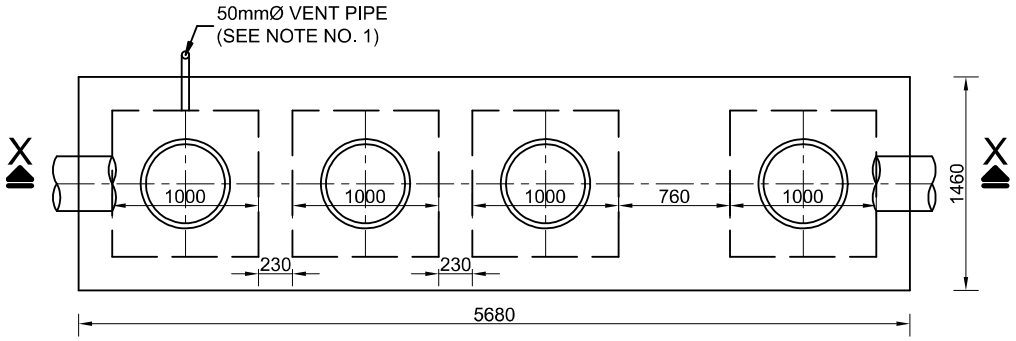

PLAN

NOTES:

1. EXTERNAL VENT PIPE 50mmØ. TO DISCHARGE IN AN AREA APPROVED BY AND TO THE FIRE REGULATIONS OF THE LOCAL AUTHORITY.
2. ALL COMPARTMENT WALLS AND FLOORS ARE TO BE PLASTERED IN A TWO COAT 1:2 CEMENT/SAND MORTAR FINISH WITH A WOOD FLOAT AND HAVING COMPLETE COVERAGE OF 12mm THICKNESS.
3. BRICK WORK TO BE 230mm IN ENGINEERING CLASS NFX TO SANS 227 GALVANIZED BRICKFORCE TO BE USED EVERY 3 COURSES.
4. EXTERNAL WALLS AND PORTION WALLS TO BE DESIGNED TO SUIT LOCAL SOILS CONDITIONS. REINFORCED CONCRETE MAY BE USED AS AN ALTERNATIVE.
5. TOP SLAB TO BE IN REINFORCED CONCRETE DESIGNED TO ACCOMMODATE THE LOCAL CONDITIONS.

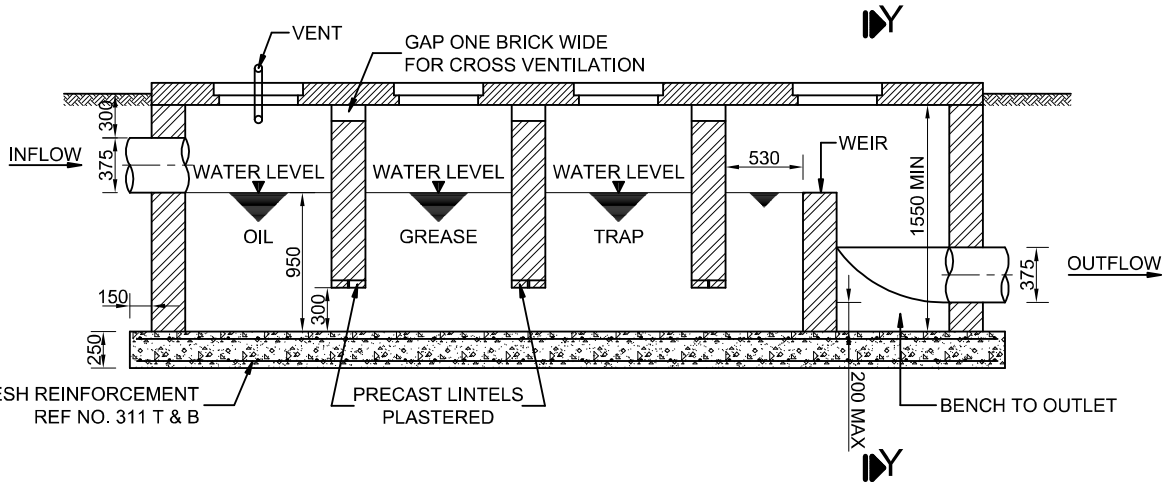

SECTION X - X

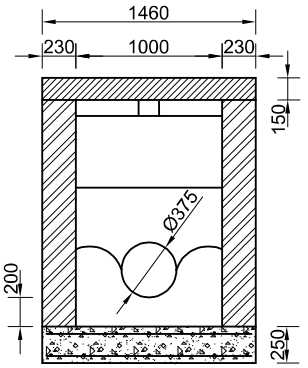

SECTION Y - Y

STELLENBOSCH
STELLENBOSCH • PNIEL • FRANSCHHOEK
MUNISIPALITEIT • UMASIPALA • MUNICIPALITY

STANDARD DETAIL DRAWING

OIL / PETROL INTERCEPTING TRAP

Scale	Paper Size
N.T.S.	A4

Drawing No.

SS16

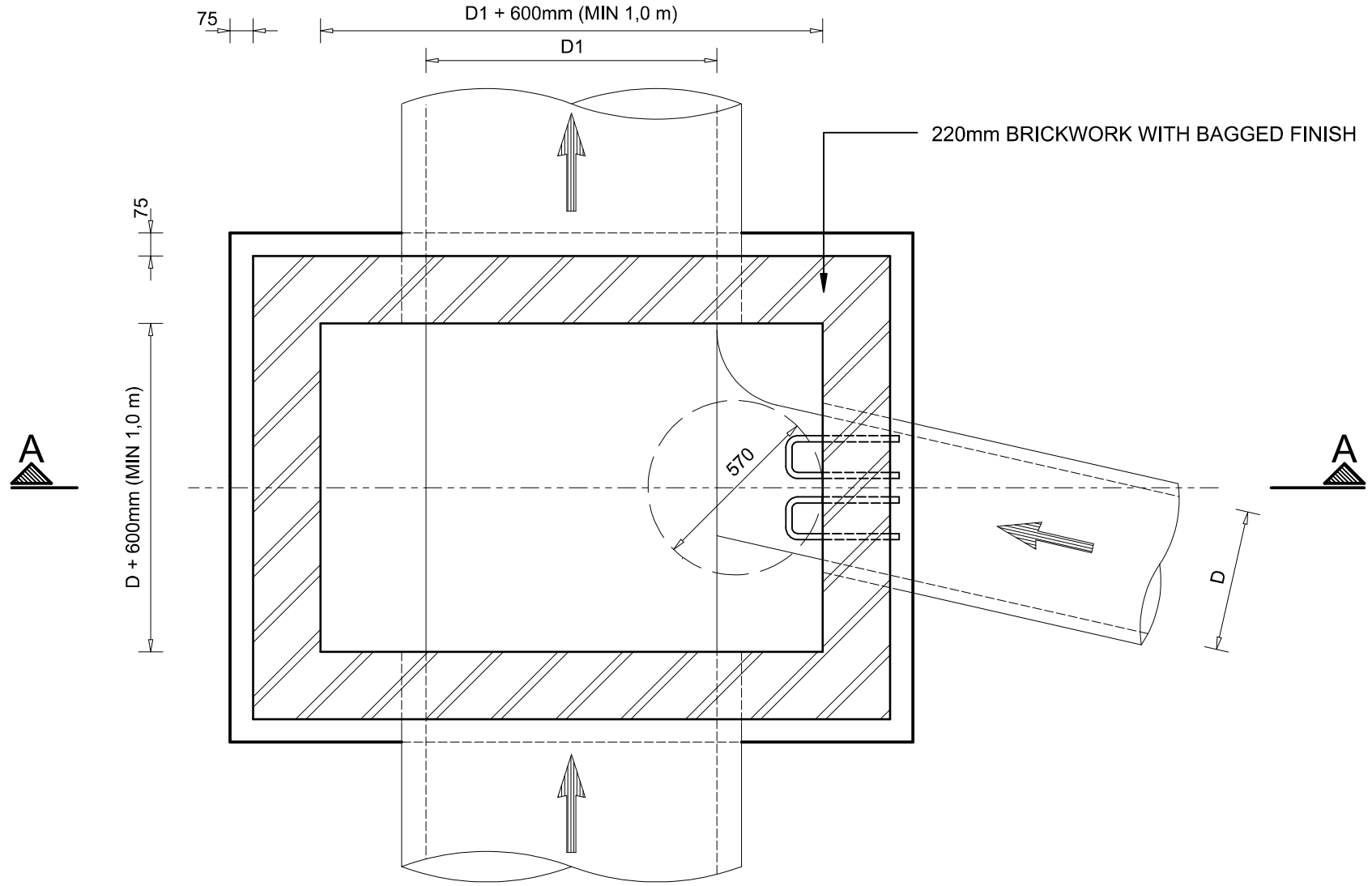

SECTIONAL PLAN

STELLENBOSCH
STELLENBOSCH • PNIEL • FRANSCHHOEK
MUNISIPALITEIT • UMASIPALA • MUNICIPALITY

STANDARD DETAIL DRAWING

MANHOLE : TYPE C - PLAN (1 OF 2)

Scale	Paper Size
1 : 20	A4

Drawing No.

SSW1

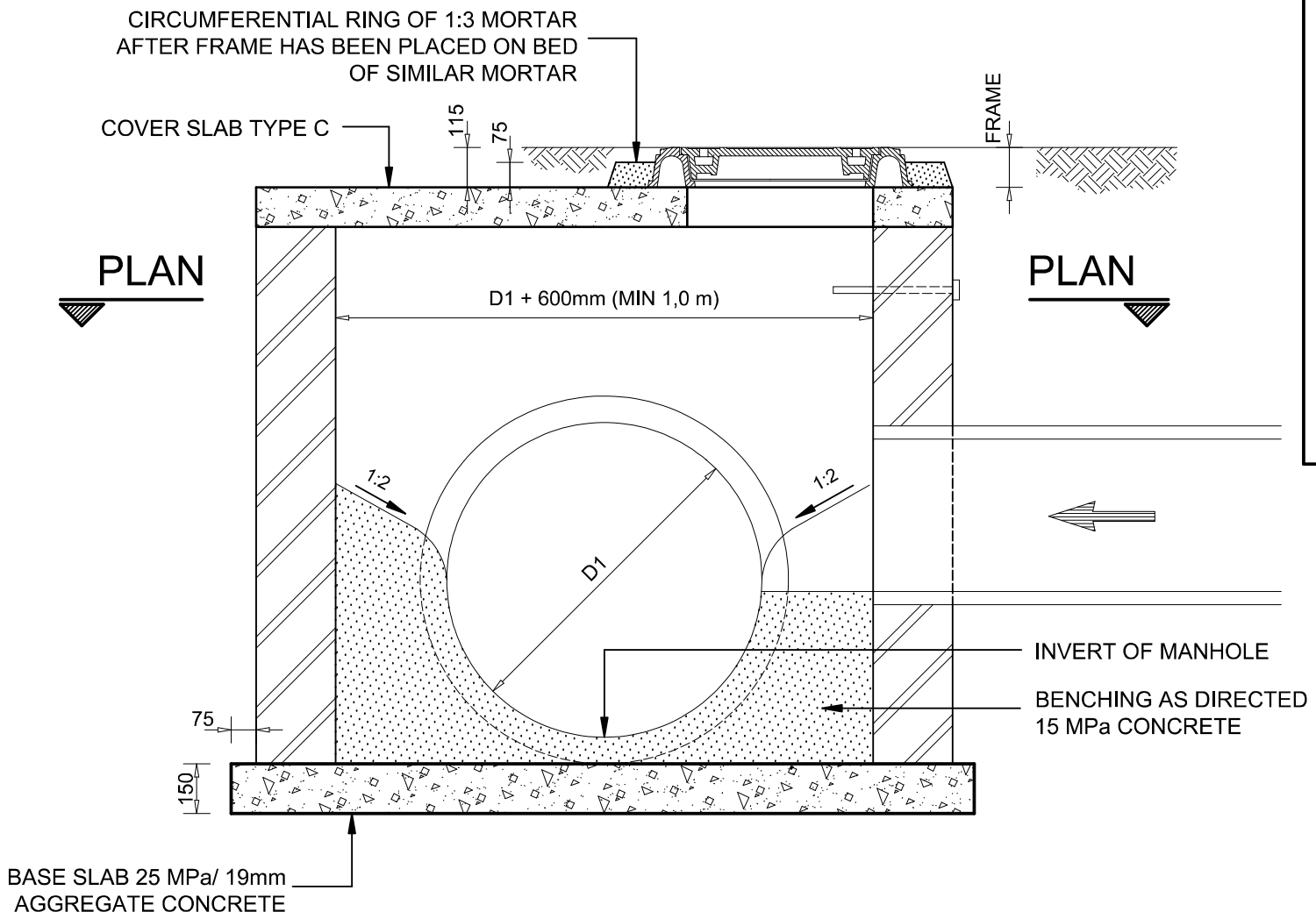

SECTION A - A

NOTES:

1. HINGED DUCTILE IRON COVER AND FRAME: SANS 50124 CLASS D400 SECUREZ Z-600-D (LOCKABLE) OR SIMILAR APPROVED
2. FOR USE WHERE DEPTH FROM COVER TO INVERT LEVEL IS 2,5M OR LESS.
3. STEP IRONS TO BE INSTALLED WHERE DEPTH FROM COVER TO INVERT IS MORE THAN 1,0M.
4. STEP IRONS SHALL HAVE A VERTICAL SPACING OF 300MM AND BE STAGGERED ALTERNATIVELY LEFT AND RIGHT AT 300MM C/C.
5. PIPE AND BENCHING ARRANGEMENT TYPICAL. VARIES WITH LAYOUT.

STELLENBOSCH
STELLENBOSCH • PNIEL • FRANSCHHOEK
MUNISIPALITEIT • UMASIPALA • MUNICIPALITY

STANDARD DETAIL DRAWING

MANHOLE : TYPE C - SECTION (2 OF 2)

Scale	Paper Size
1 : 20	A4

Drawing No.
SSW2

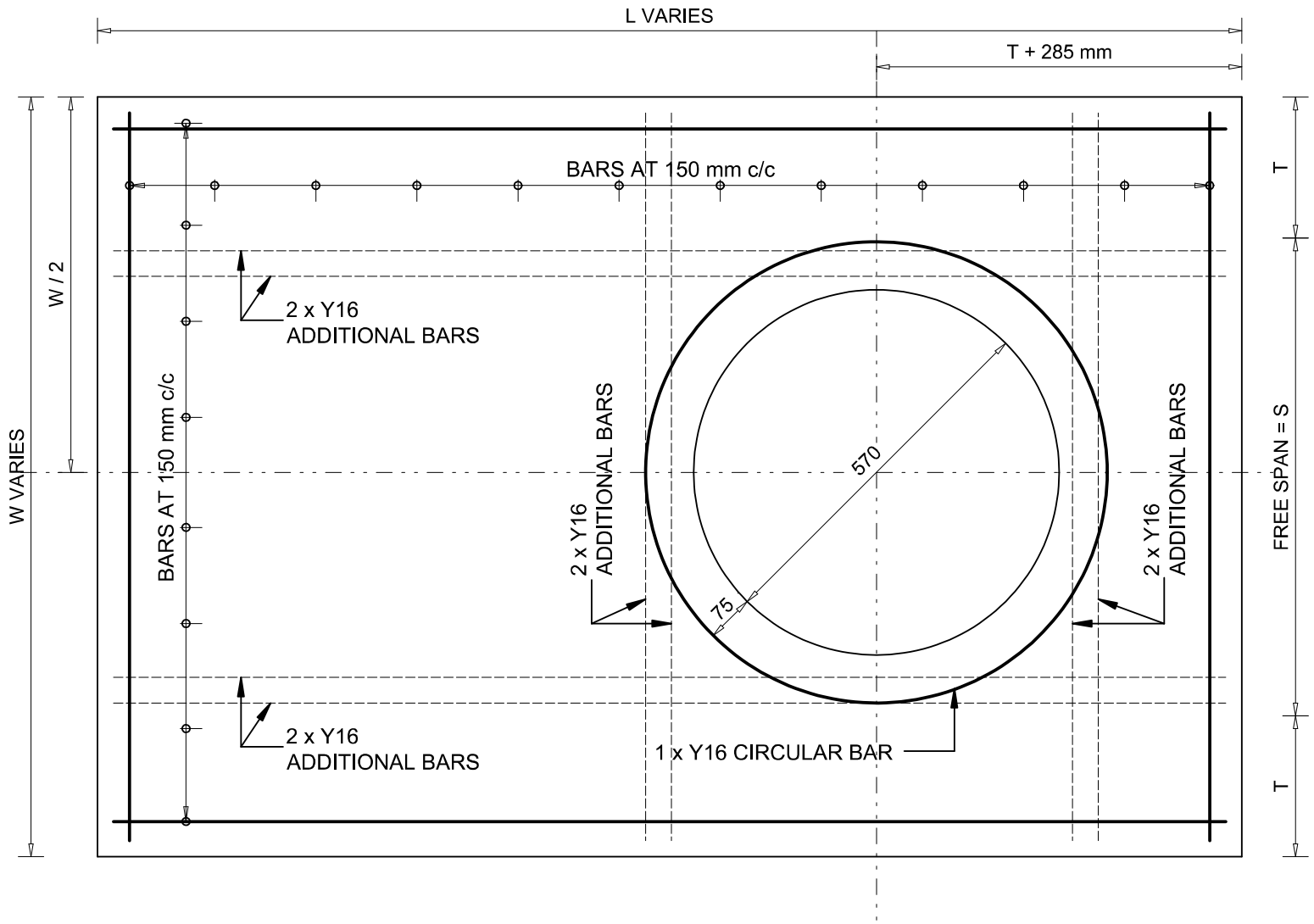

S	SLAB THICKNESS	BAR Ø
0 TO 1,5	150	Y16
>1,5 TO 2.5	200	Y25

NOTES:

1. For use with Type C and D Manholes.
2. Concrete 25 MPa.
3. Minimum cover to reinforcement 25mm.
4. All reinforcement to be placed at bottom of slab. Short span B1.
5. T: Wall width of brickwork.

STELLENBOSCH
STELLENBOSCH • PNIEL • FRANSCHHOEK
MUNISIPALITEIT • UMASIPALA • MUNICIPALITY

STANDARD DETAIL DRAWING

COVER SLAB : TYPE C

Scale	Paper Size
N.T.S.	A4

Drawing No.
SSW3

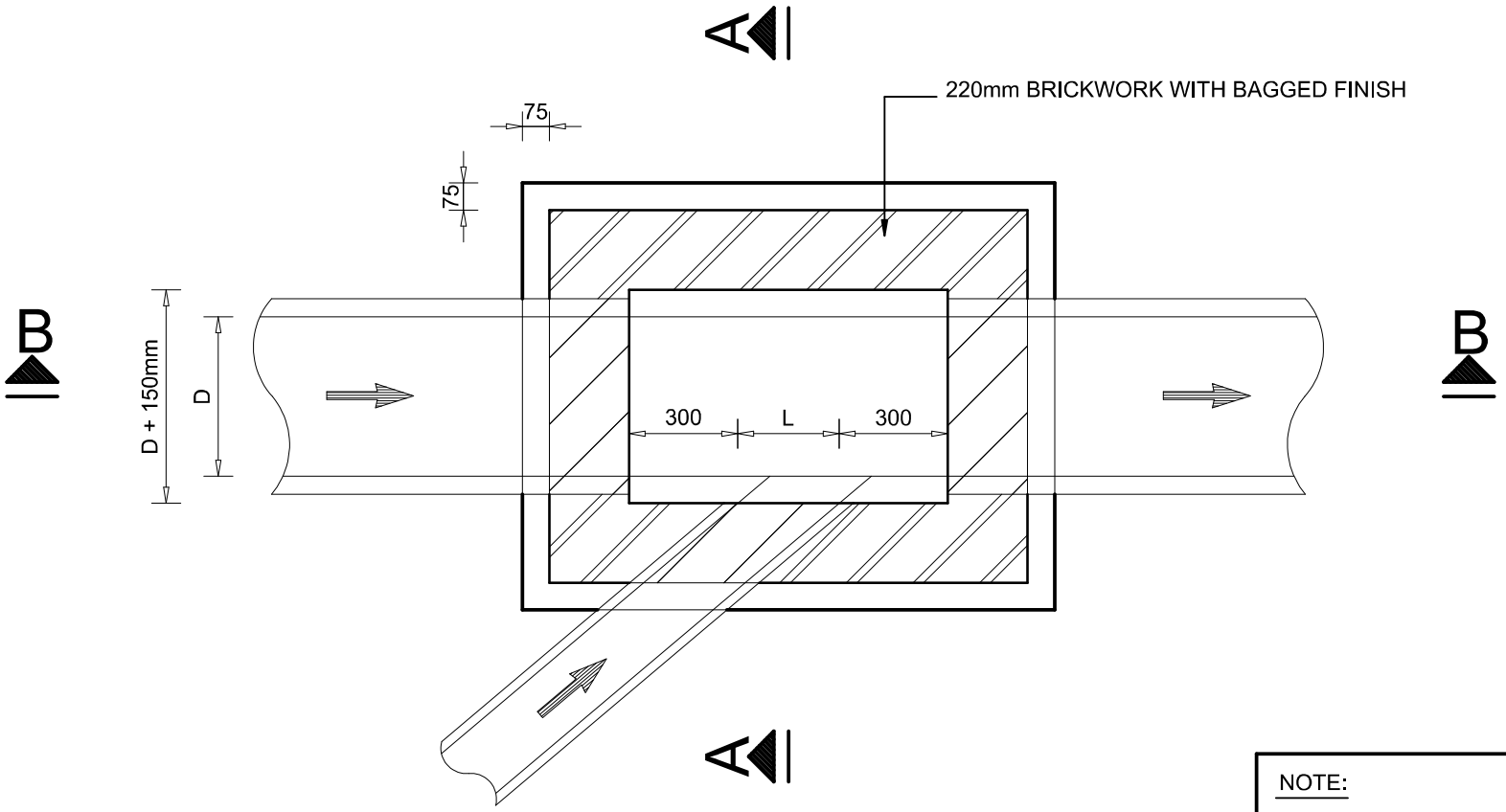

NOTE:

- TYPICAL PIPE AND BENCHING. VARIES TO SUIT LAYOUT
- D = INSIDE DIAMETER OF PIPE

PLAN LAYOUT

STELLENBOSCH
STELLENBOSCH • PNIEL • FRANSCHHOEK
MUNISIPALITEIT • UMASIPALA • MUNICIPALITY

STANDARD DETAIL DRAWING

JUNCTION BOX : TYPE 1 - PLAN (1 OF 2)

Scale	Paper Size
1 : 20	A4

Drawing No.

SSW4

REINFORCEMENT		
FOR D + 150	SLAB THICKNESS T	BAR Ø
0,45 TO 0,8	100mm	Y12
0,8 TO 1,5	150mm	Y16
1,5 TO 2,5	200mm	Y25

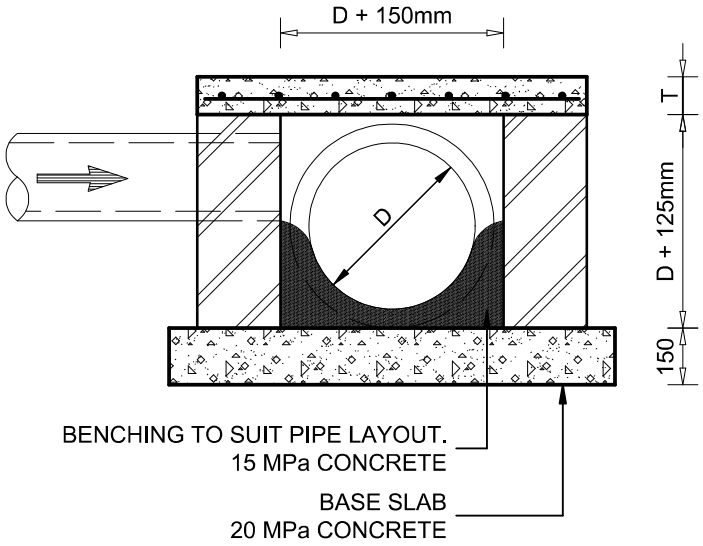

SECTION A - A

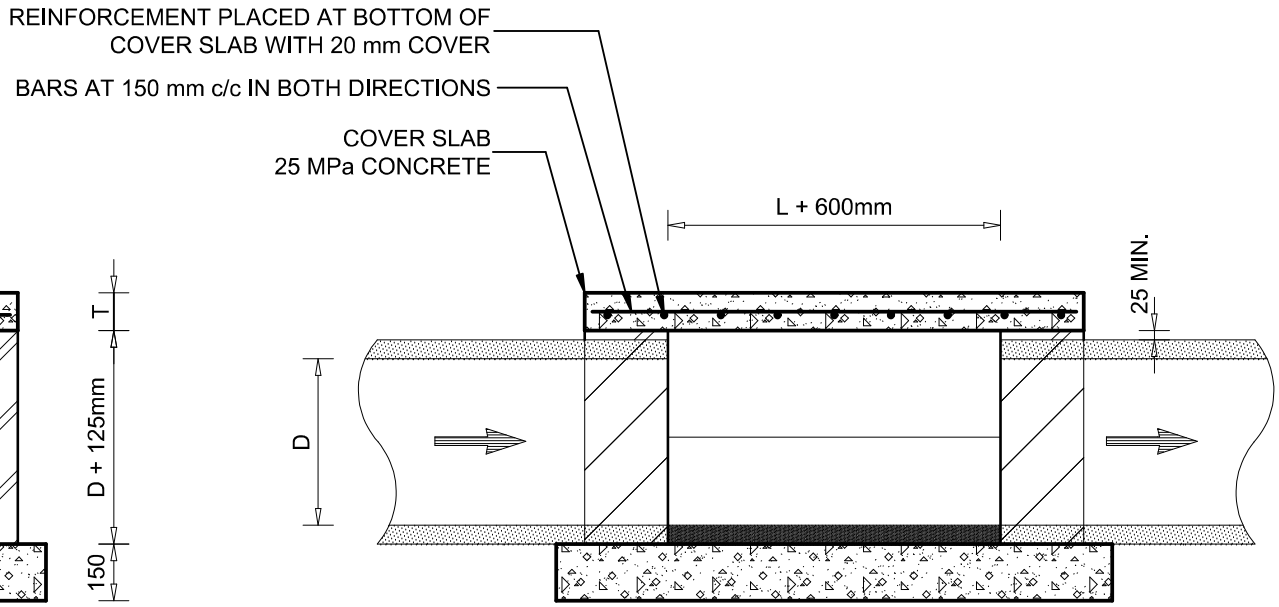

SECTION B - B

STELLENBOSCH
STELLENBOSCH • PNIEL • FRANSCHHOEK
MUNISIPALITEIT • UMASIPALA • MUNICIPALITY

STANDARD DETAIL DRAWING

JUNCTION BOX : TYPE 1 - SECTION (2 0F 2)

Scale	Paper Size
1 : 20	A4

Drawing No.

SSW5

DIMENSIONS FOR SETTING-OUT PURPOSES						
NOMINAL Ø	X	Y	Z	W	V	h
300	1000	2430	920	570	1725	260
375	1000	2510	1000	650	1805	260
450	1000	2590	1090	730	1885	260
525	1000	2680	1170	820	1975	350
600	1200	2990	1250	900	2285	350
675	1400	3310	1340	990	2605	350
750	1600	3625	1420	1070	2920	440
825	1800	3935	1500	1150	3230	440
900	2000	4255	1590	1240	3550	440

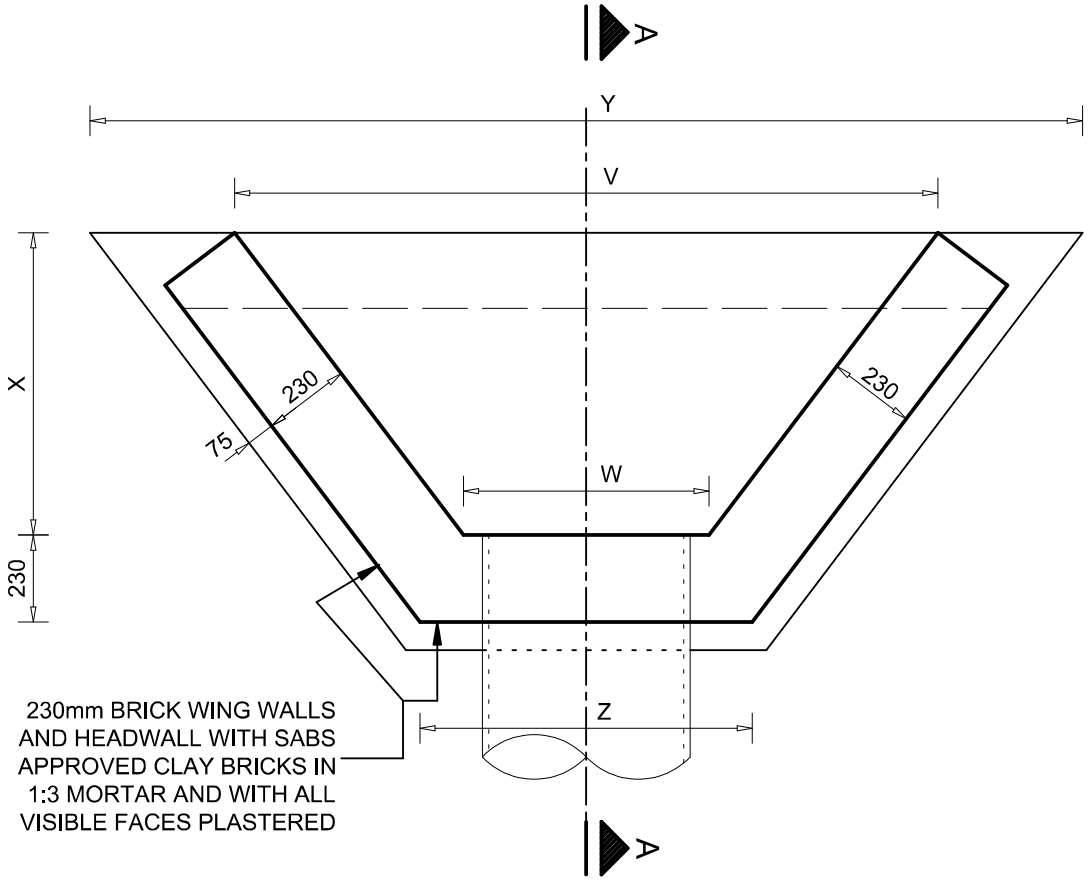

PLAN

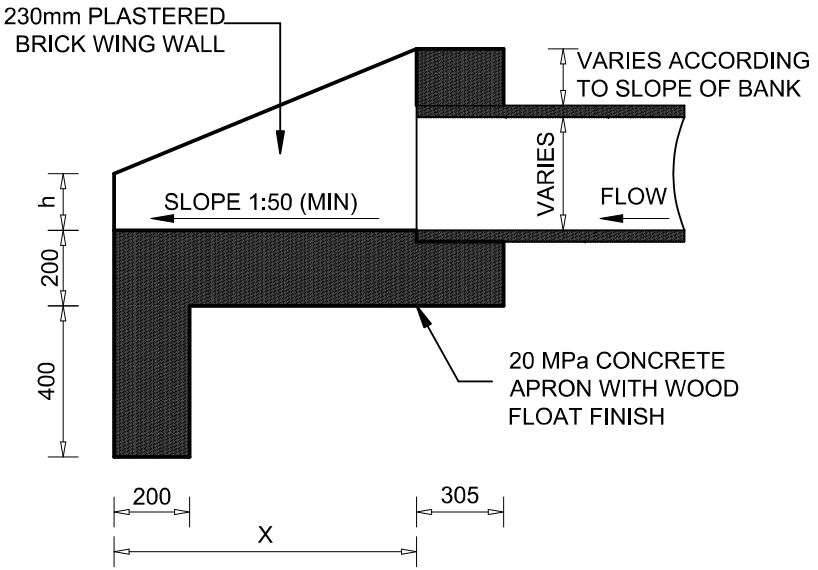

SECTION A - A

STELLENBOSCH
STELLENBOSCH • PNIEL • FRANSCHHOEK
MUNISIPALITEIT • UMASIPALA • MUNICIPALITY

STANDARD DETAIL DRAWING

HEADWALL : TYPE 1

Scale	Paper Size
1 : 20	A4

Drawing No.

SSW6

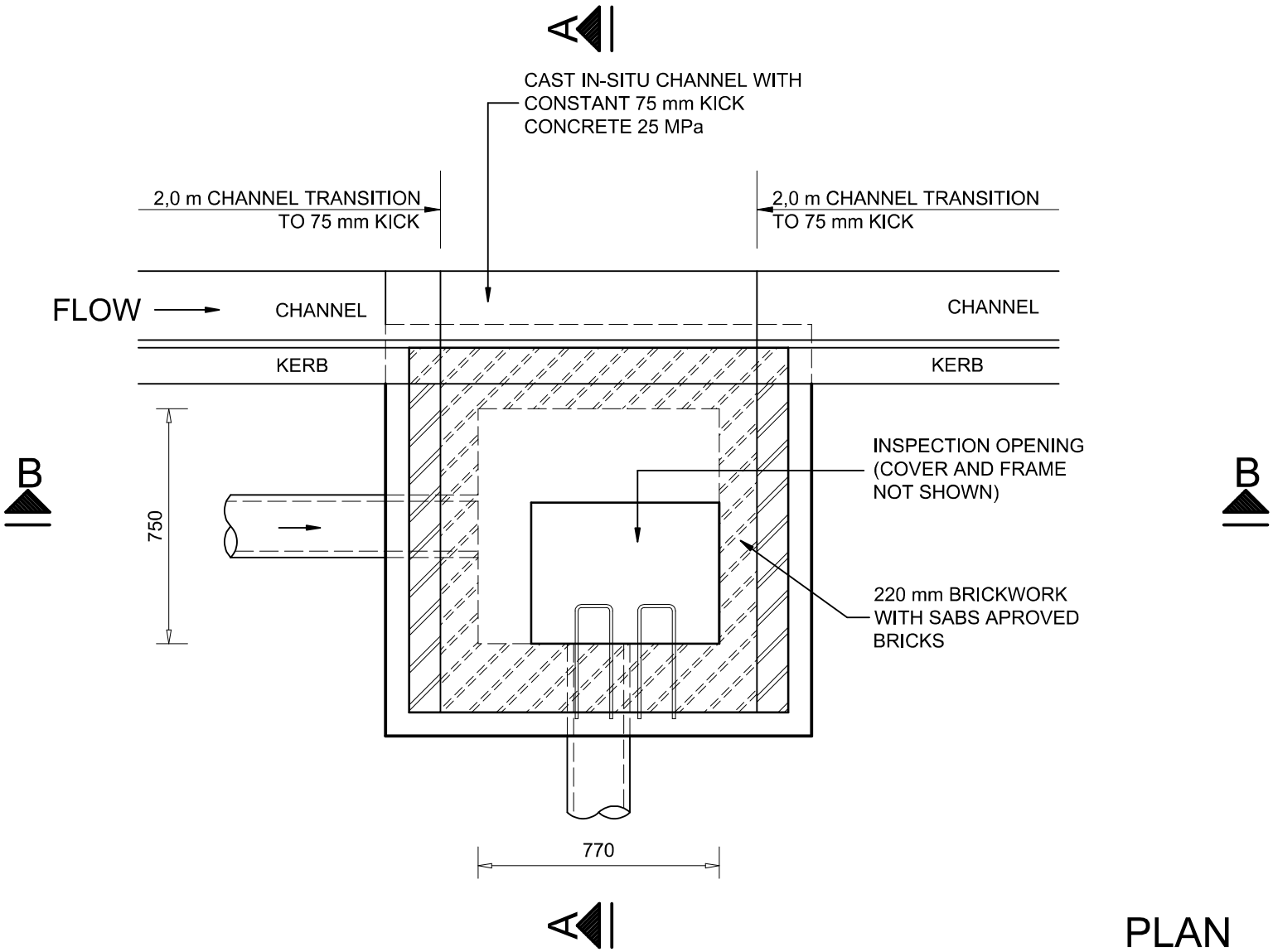

PLAN

STELLENBOSCH
STELLENBOSCH • PNIEL • FRANSCHHOEK
MUNISIPALITEIT • UMASIPALA • MUNICIPALITY

STANDARD DETAIL DRAWING

CATCHPIT : TYPE A - PLAN (1 OF 3)

Scale	Paper Size
1 : 20	A4

Drawing No.

SSW7

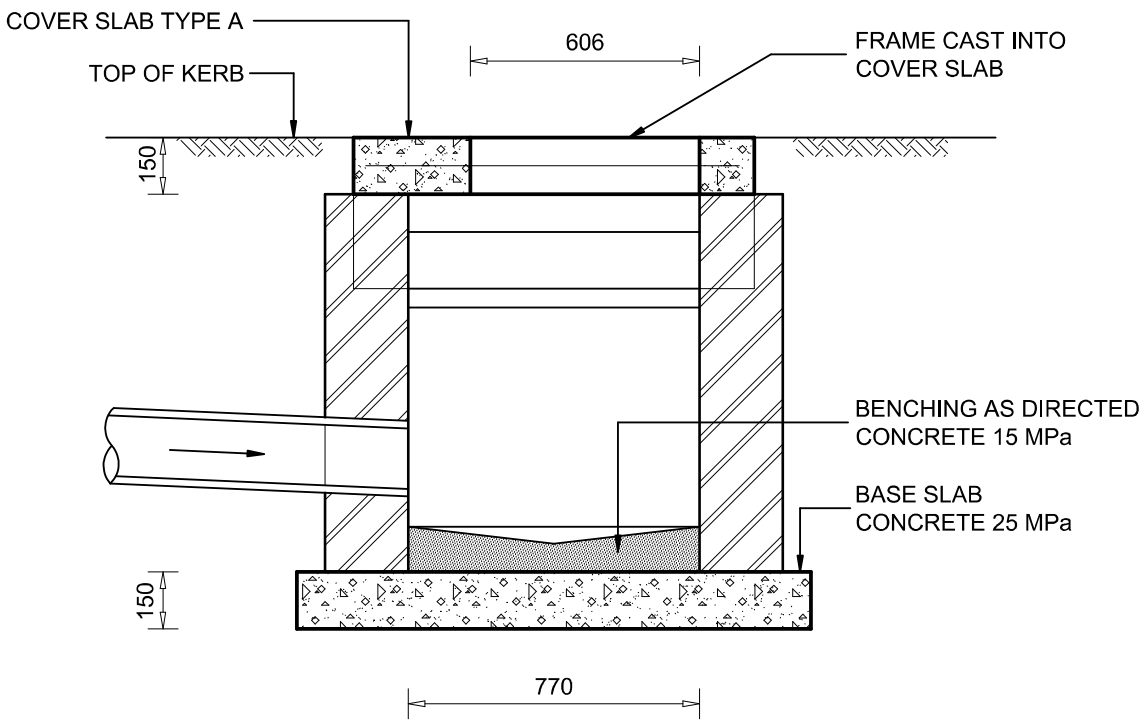

SECTION B - B

STELLENBOSCH
STELLENBOSCH • PNIEL • FRANSCHHOEK
MUNISIPALITEIT • UMASIPALA • MUNICIPALITY

STANDARD DETAIL DRAWING

CATCHPIT : TYPE A - SECTION B-B (2 OF 3)

Scale	Paper Size
1 : 20	A4

Drawing No.
SSW8

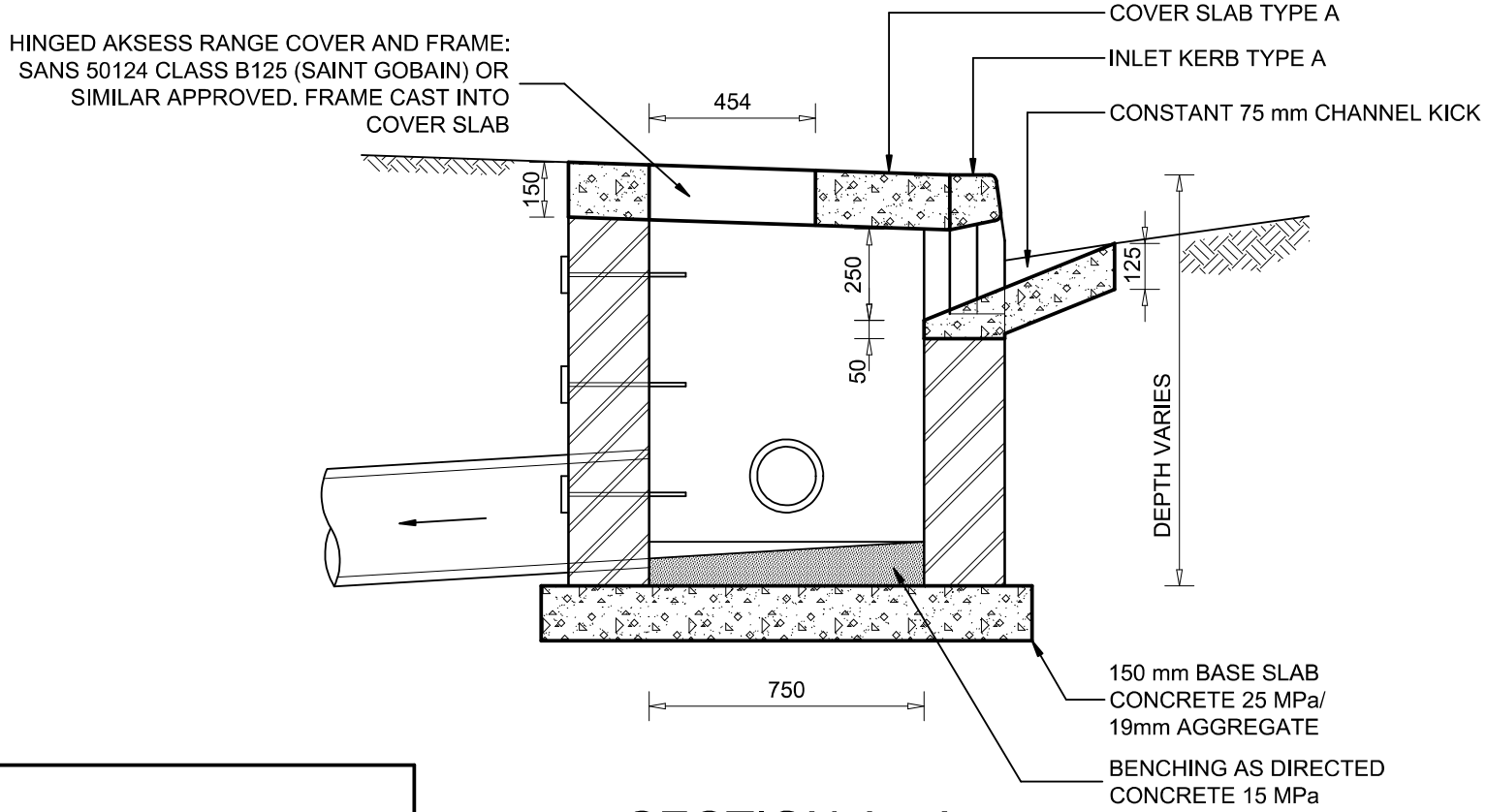

SECTION A - A

NOTES:

1. STEP IRONS TO BE STAGGERED AND PLACED TO SUIT BENCHING AT 300 mm c/c INTERVALS.
2. PIPE AND BENCHING ARRANGEMENT TYPICAL. VARIES WITH CIRCUMSTANCES.

STELLENBOSCH
STELLENBOSCH • PNIEL • FRANSCHHOEK
MUNISIPALITEIT • UMASIPALA • MUNICIPALITY

STANDARD DETAIL DRAWING

CATCHPIT : TYPE A - SECTION A-A (3 OF 3)

Scale	Paper Size
1 : 20	A4

Drawing No.
SSW9

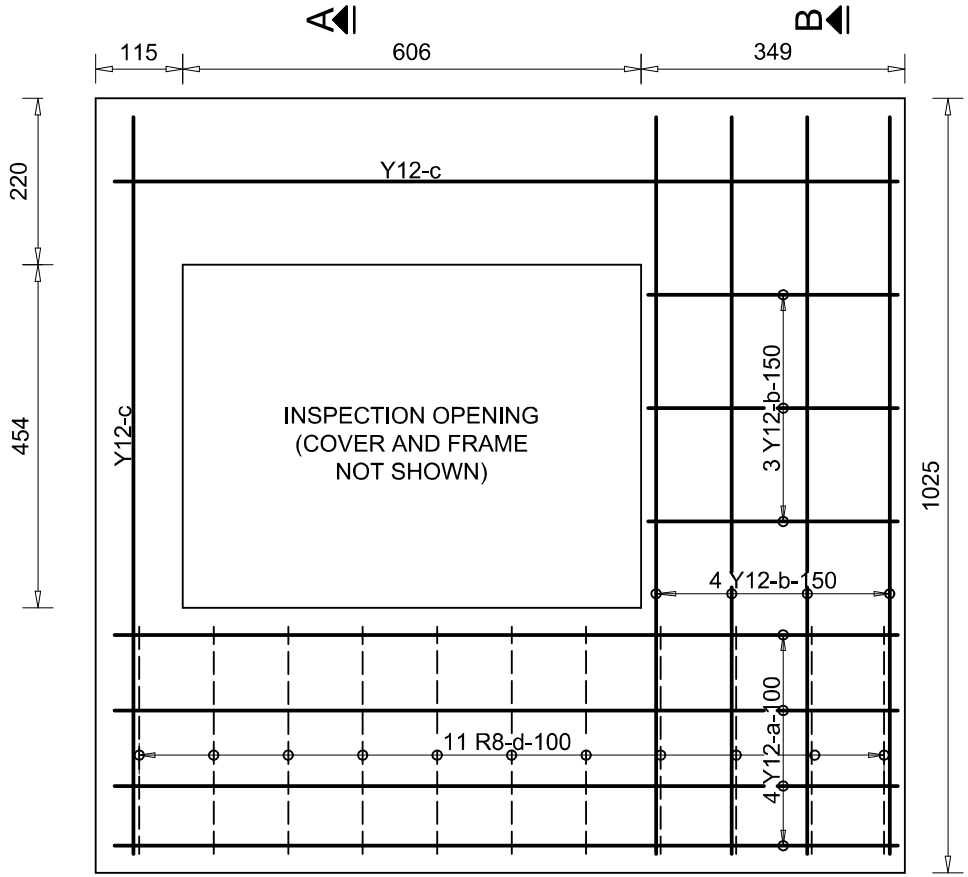

NOTES:

1. For use with Type A catchpits with max pipe diameter of 750mm.
2. Concrete 25 MPa.
3. 20mm Minimum cover over all reinforcement
4. Cover to be cast into cover slab
5. Cover slab to be in-situ.
6. Wood float finish to top of slab.

PLAN LAYOUT ON BOTTOM REINFORCEMENT

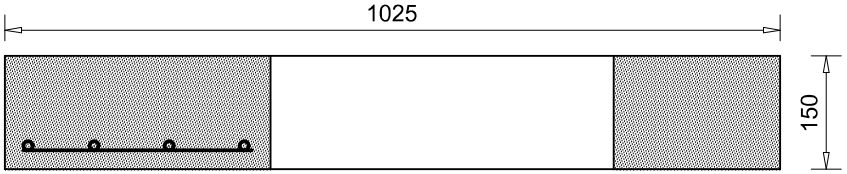

SECTION A - A

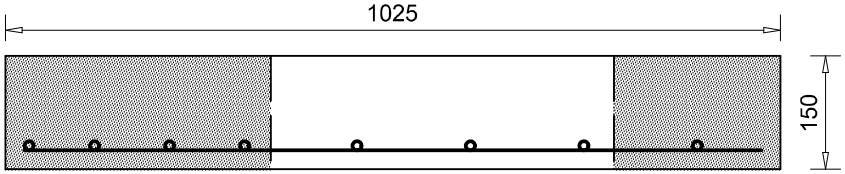

SECTION B - B

STELLENBOSCH
STELLENBOSCH • PNIEL • FRANSCHHOEK
MUNISIPALITEIT • UMASIPALA • MUNICIPALITY

STANDARD DETAIL DRAWING

COVER SLAB : TYPE A

Scale	Paper Size
1 : 10	A4

Drawing No.

SSW10

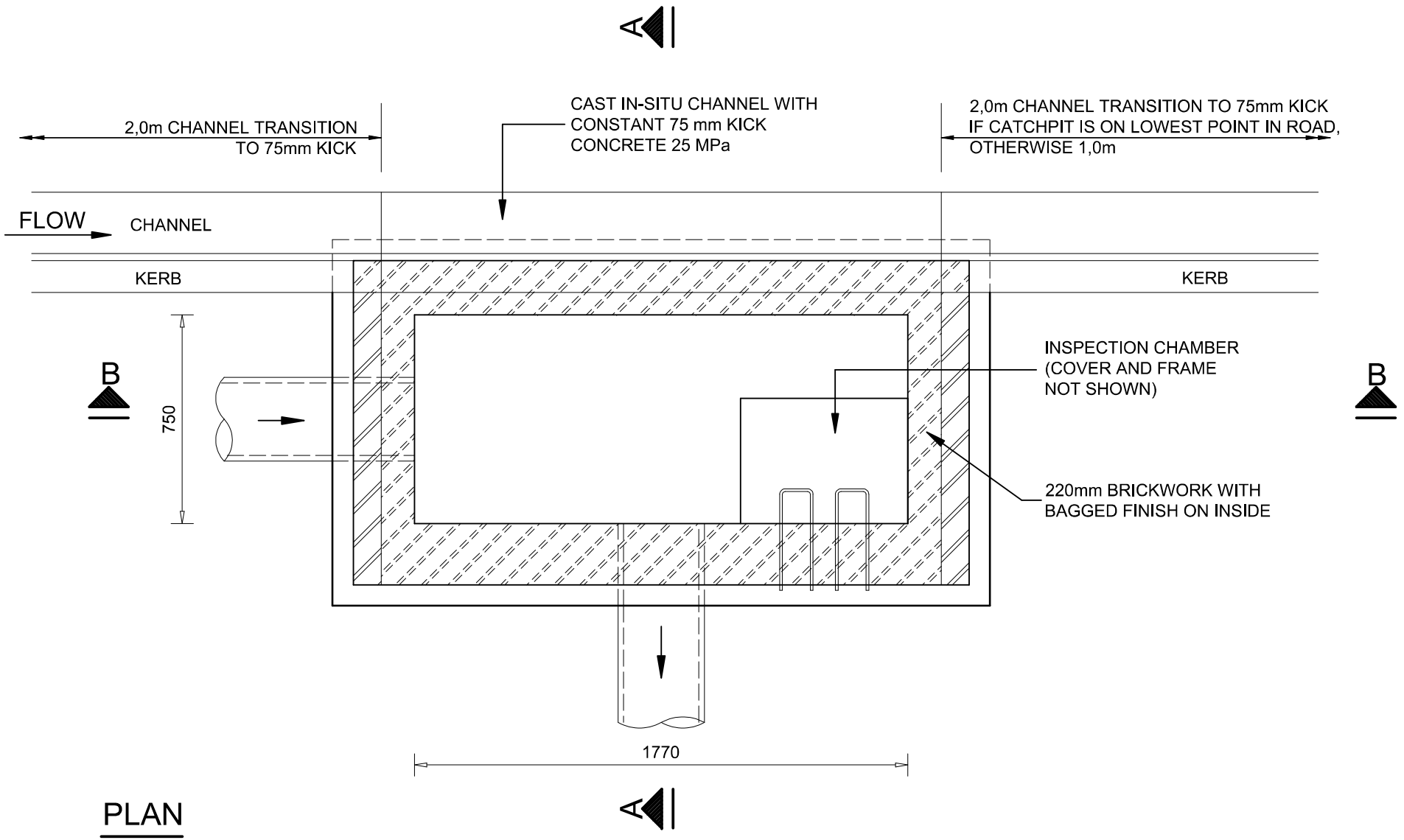

PLAN

STELLENBOSCH
STELLENBOSCH • PNIEL • FRANSCHHOEK
MUNISIPALITEIT • UMASIPALA • MUNICIPALITY

STANDARD DETAIL DRAWING

CATCHPIT : TYPE B - PLAN (1 OF 3)

Scale	Paper Size
1 : 20	A4

Drawing No.

SSW11

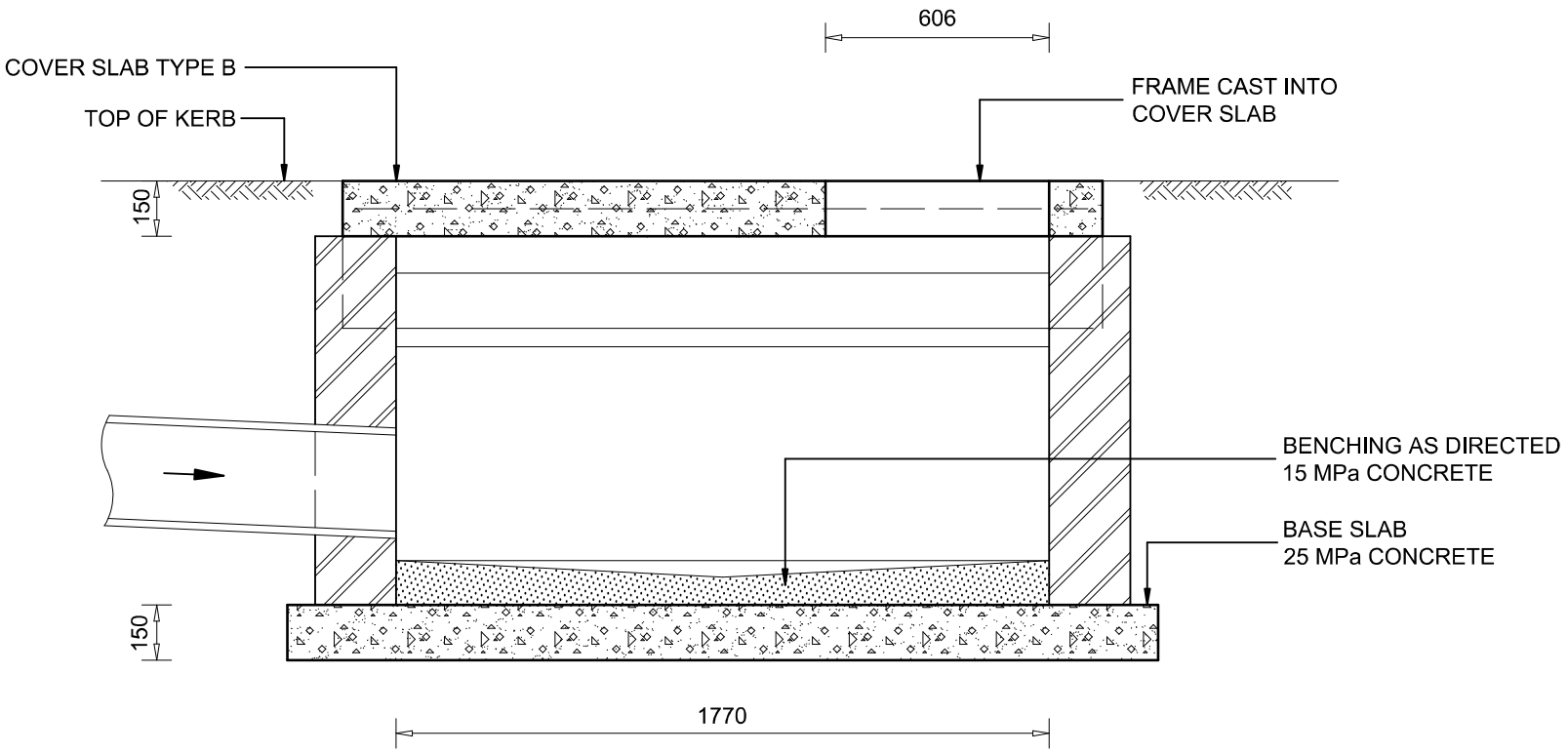

SECTION B - B

STELLENBOSCH
STELLENBOSCH • PNIEL • FRANSCHHOEK
MUNISIPALITEIT • UMASIPALA • MUNICIPALITY

STANDARD DETAIL DRAWING

CATCHPIT : TYPE B - SECTION B-B (2 OF 3)

Scale	Paper Size
1 : 20	A4

Drawing No.
SSW12

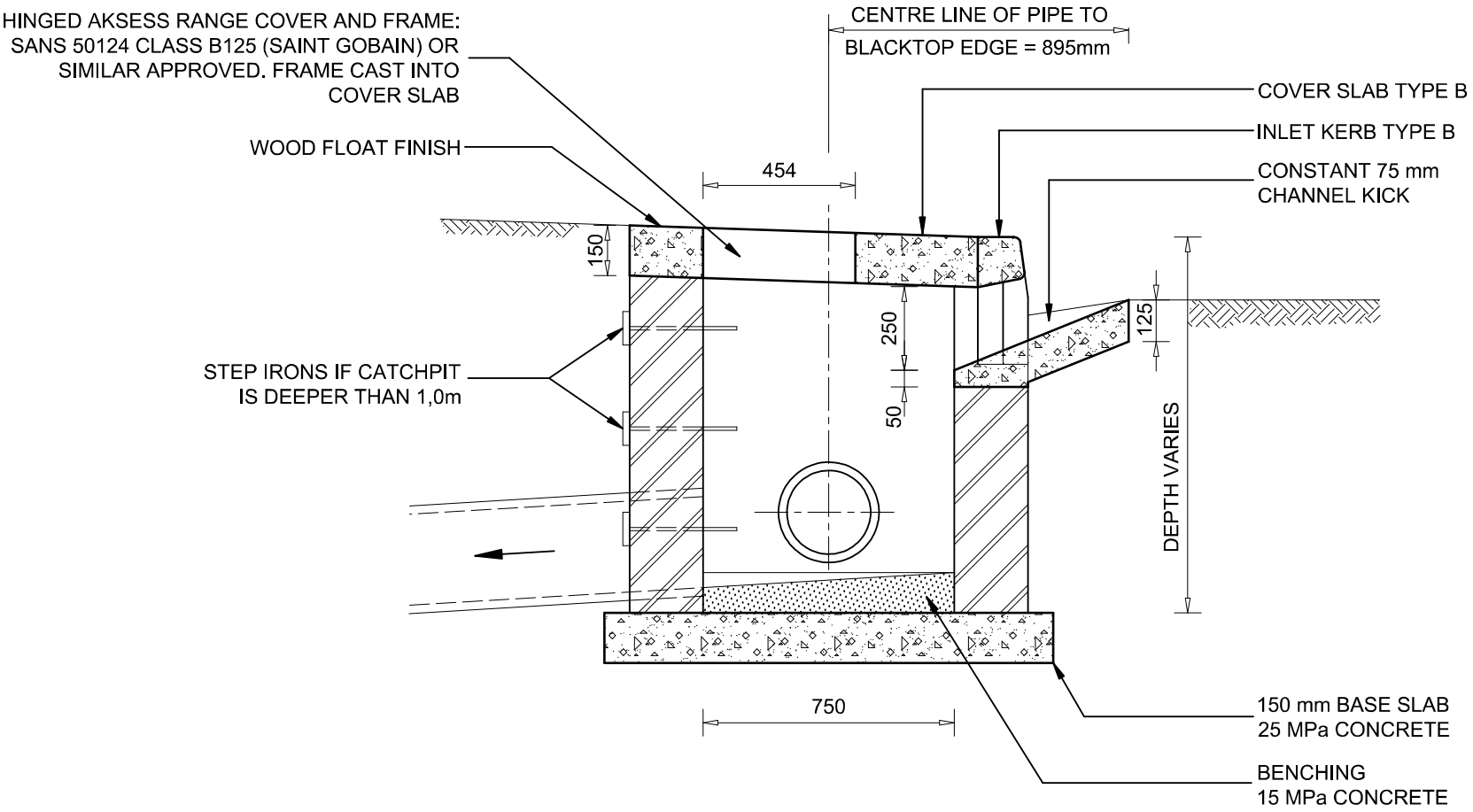

SECTION A - A

NOTES:

1. STEP IRONS TO BE STAGGERED & PLACED AT 300mm SPACING FOR CATCHPITS DEEPER THAN 1,0.
2. PIPE AND BENCHING VARIES TO SUIT LAYOUT.

STELLENBOSCH
STELLENBOSCH • PNIEL • FRANSCHHOEK
MUNISIPALITEIT • UMASIPALA • MUNICIPALITY

STANDARD DETAIL DRAWING

CATCHPIT : TYPE B - SECTION A-A (3 OF 3)

Scale	Paper Size
1 : 20	A4

Drawing No.

SSW13

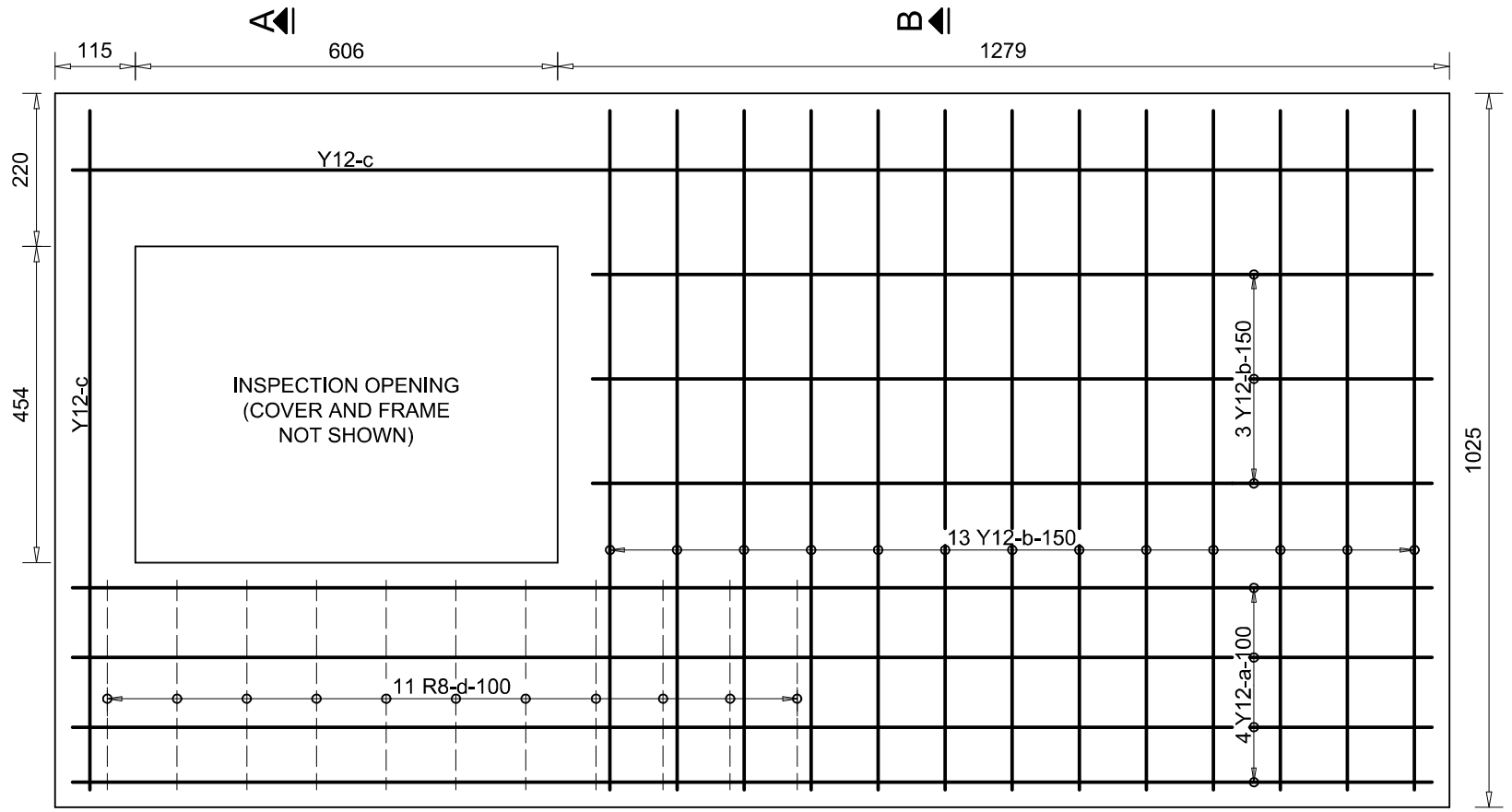

NOTES:

1. For use with Type B catch-pits with max pipe diameter of 750mm.
2. Concrete 25 MPa.
3. 20mm Minimum cover over all reinforcement
4. Cover to be cast into cover slab
5. Cover slab to be in-situ and reinforcement of cover slab to be joint with stirrups of inlet kerb.
6. Wood float finish to top of slab.

PLAN LAYOUT OF BOTTOM REINFORCEMENT

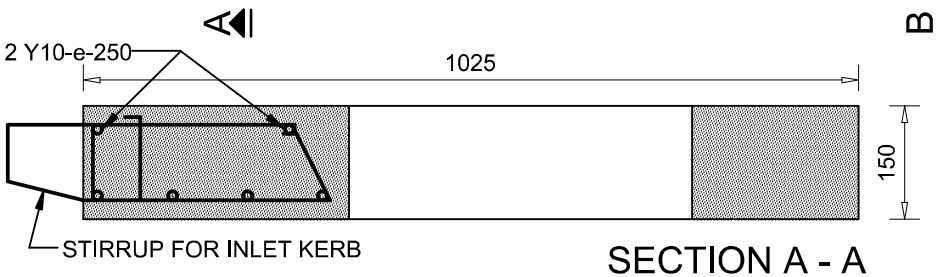

SECTION A - A

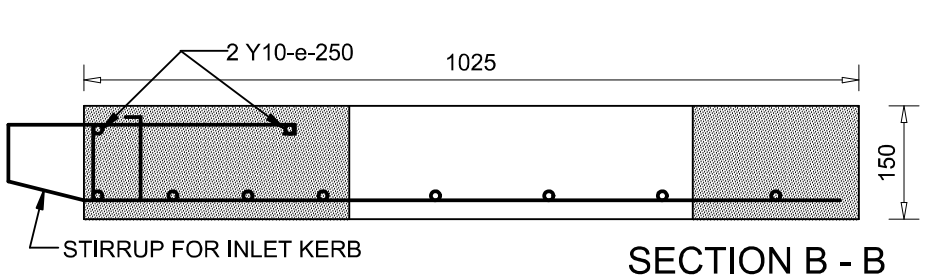

SECTION B - B

STELLENBOSCH
STELLENBOSCH • PNIEL • FRANSCHHOEK
MUNISIPALITEIT • UMASIPALA • MUNICIPALITY

STANDARD DETAIL DRAWING

COVER SLAB : TYPE B

Scale	Paper Size
1 : 10	A4

Drawing No.

SSW14

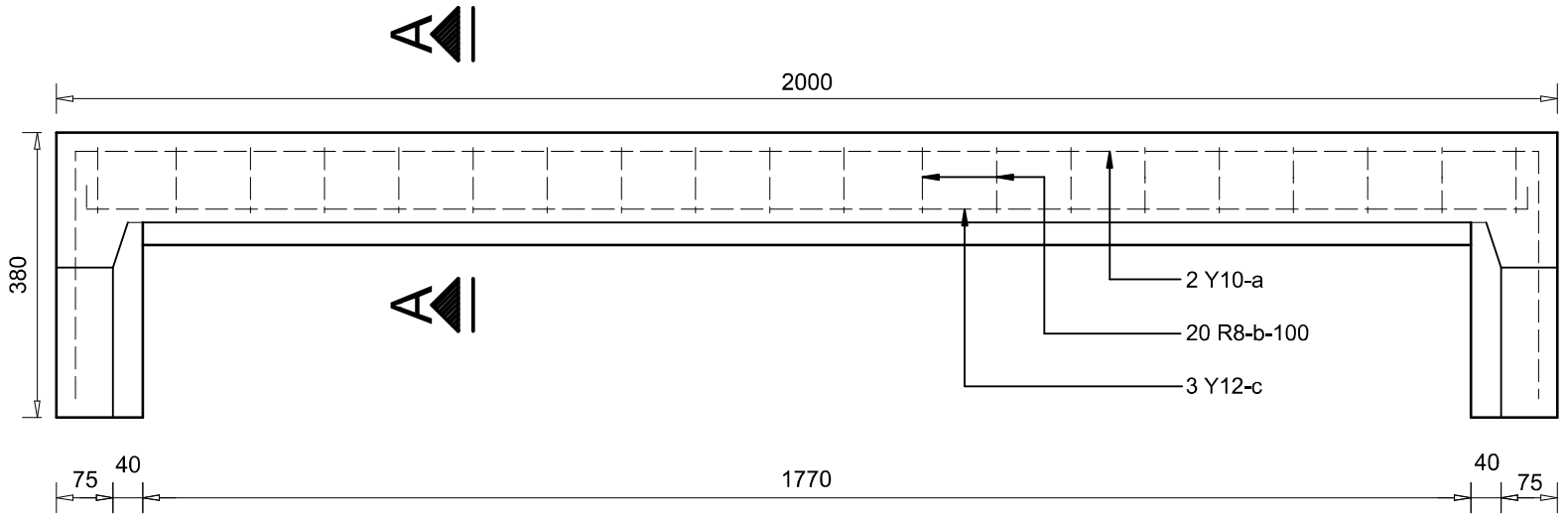

FRONT ELEVATION

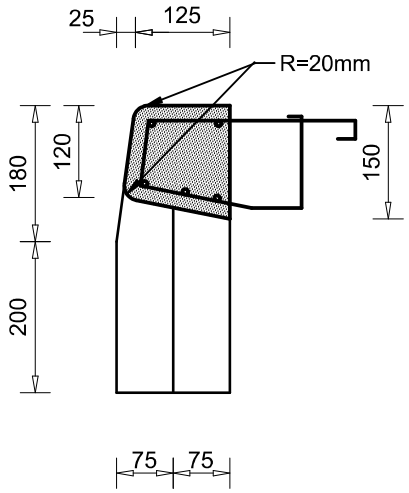

SECTION A-A

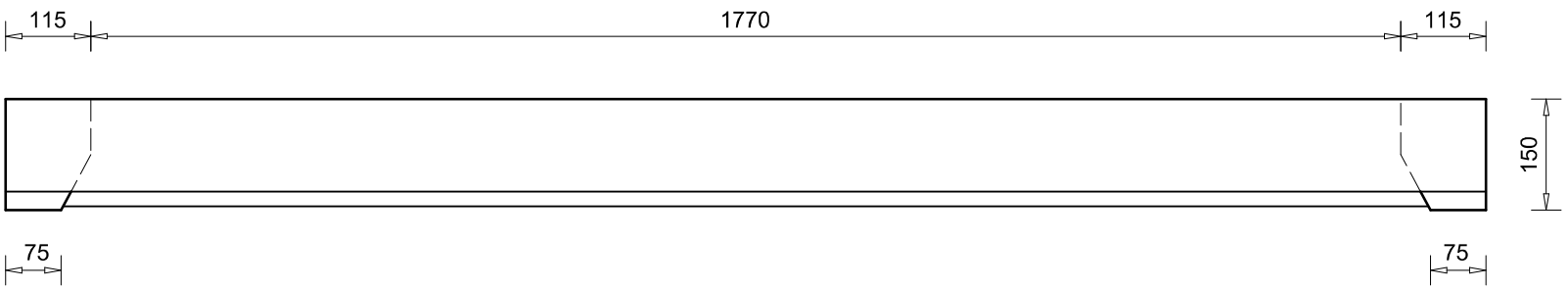

PLAN

STELLENBOSCH
STELLENBOSCH • PNIEL • FRANSCHHOEK
MUNISIPALITEIT • UMASIPALA • MUNICIPALITY

STANDARD DETAIL DRAWING

INLET KERB : TYPE B (1 OF 2)

Scale	Paper Size
1 : 10	A4

Drawing No.

SSW15

SCHEDULE FOR INLET KERB
-TYPE B-

MARK	TOTAL	Ø	BENDING DETAILS
a	2	Y10	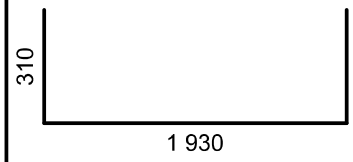
b	20	R8	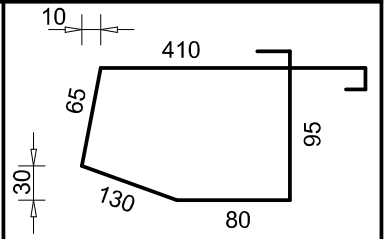
c	3	Y12	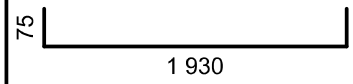

NOTES:

1. CONCRETE 25 MPa
   = 1 BAG CEMENT : 90 LITRE SAND : 110 LITRE STONE (1 : 2,4 : 2,9)
2. COVER TO REINFORCEMENT = 20 mm

STELLENBOSCH
STELLENBOSCH • PNIEL • FRANSCHHOEK
MUNISIPALITEIT • UMASIPALA • MUNICIPALITY

STANDARD DETAIL DRAWING

INLET KERB : TYPE B (2 OF 2)

Scale	Paper Size
1 : 10	A4

Drawing No.
SSW16

NOTES:

1. HINGED COVERS ARE TO OPEN TOWARDS SIDEWALK AND NOT ROAD.
2. BENCHING NOT REQUIRED IN SANDY AREAS.
3. MAX. DEPTH TO BE 1m.
4. BRICKWORK - TO BE ENGINEERING CLASS NFX TO SANS 227.

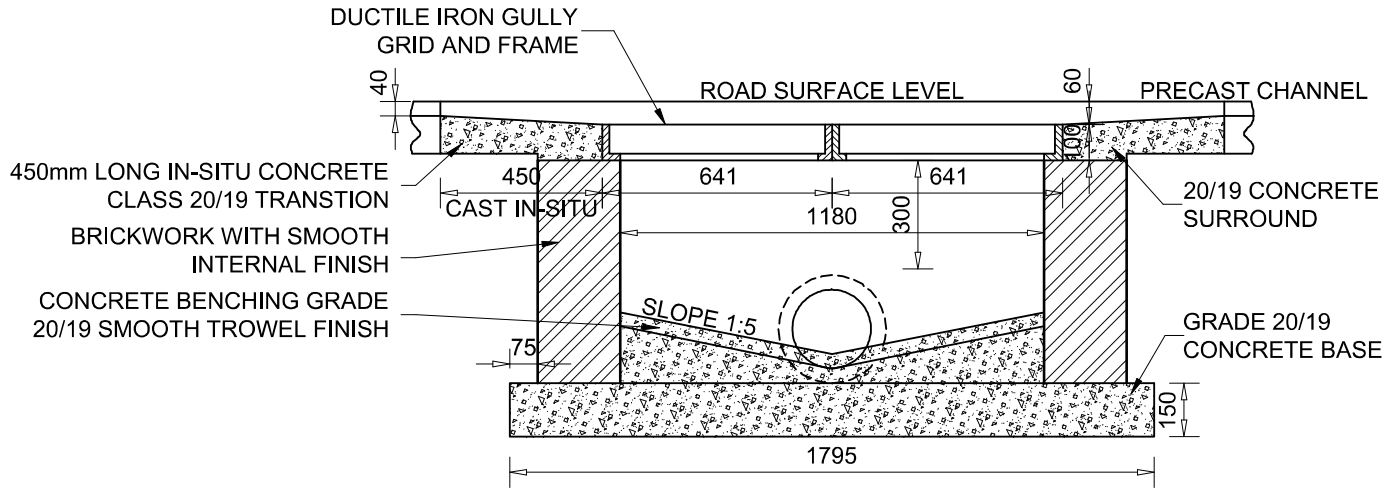

SECTION F - F

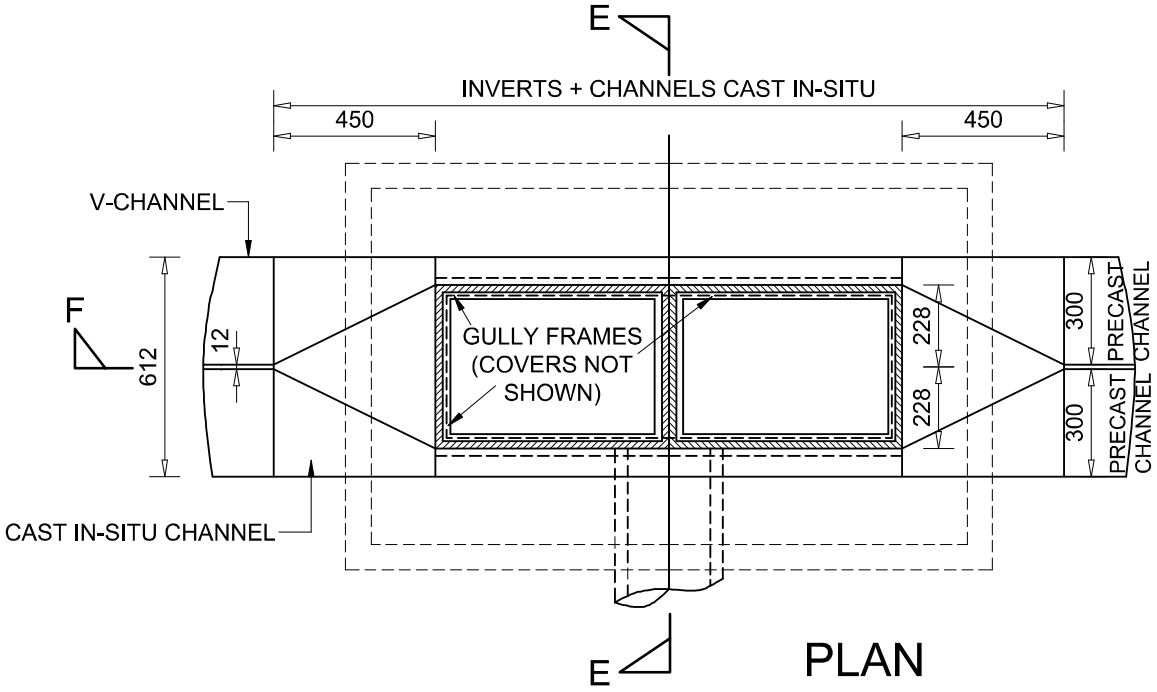

PLAN

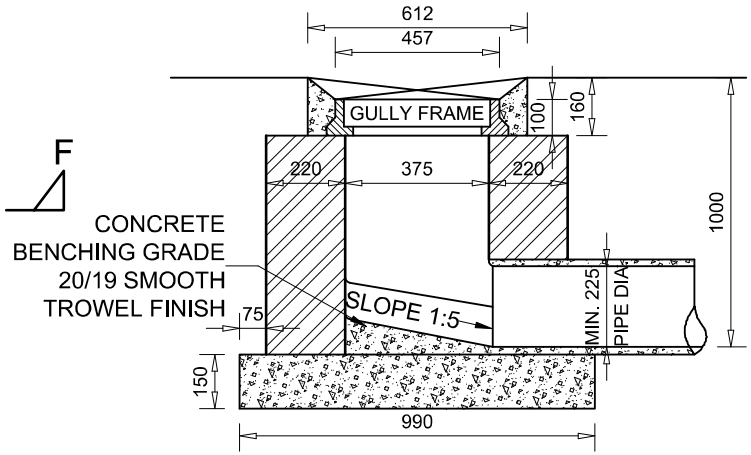

SECTION E - E

STELLENBOSCH
STELLENBOSCH • PNIEL • FRANSCHHOEK
MUNISIPALITEIT • UMASIPALA • MUNICIPALITY

STANDARD DETAIL DRAWING

DOUBLE GULLY GRID CATCHPIT

Scale	Paper Size
N.T.S.	A4

Drawing No.

SSW17

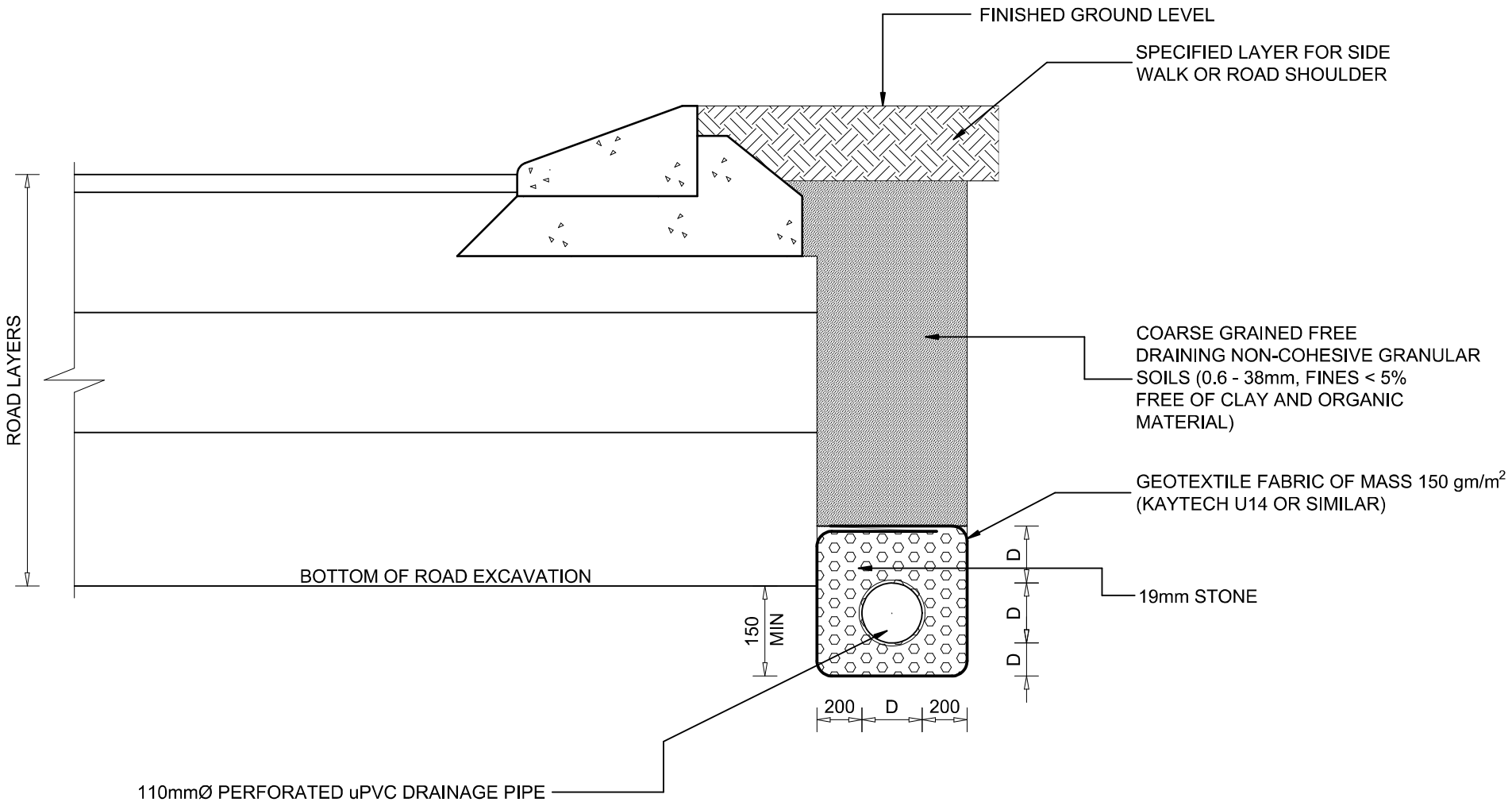

STELLENBOSCH
STELLENBOSCH • PNIEL • FRANSCHHOEK
MUNISIPALITEIT • UMASIPALA • MUNICIPALITY

STANDARD DETAIL DRAWING

SUB SURFACE DRAIN : TYPE 1 (STONE)

Scale	Paper Size
1 : 10	A4

Drawing No.
SSW18

NOTES:

1. BENCHING REQUIRED TO PREVENT STANDING WATER.
2. BRICKWORK - ENGINEERING CLASS NFX
3. MORTAR FOR BRICKWORK TO BE 1:3
4. WHERE DEPTH > 1000 USE STANDARD SW MANHOLE

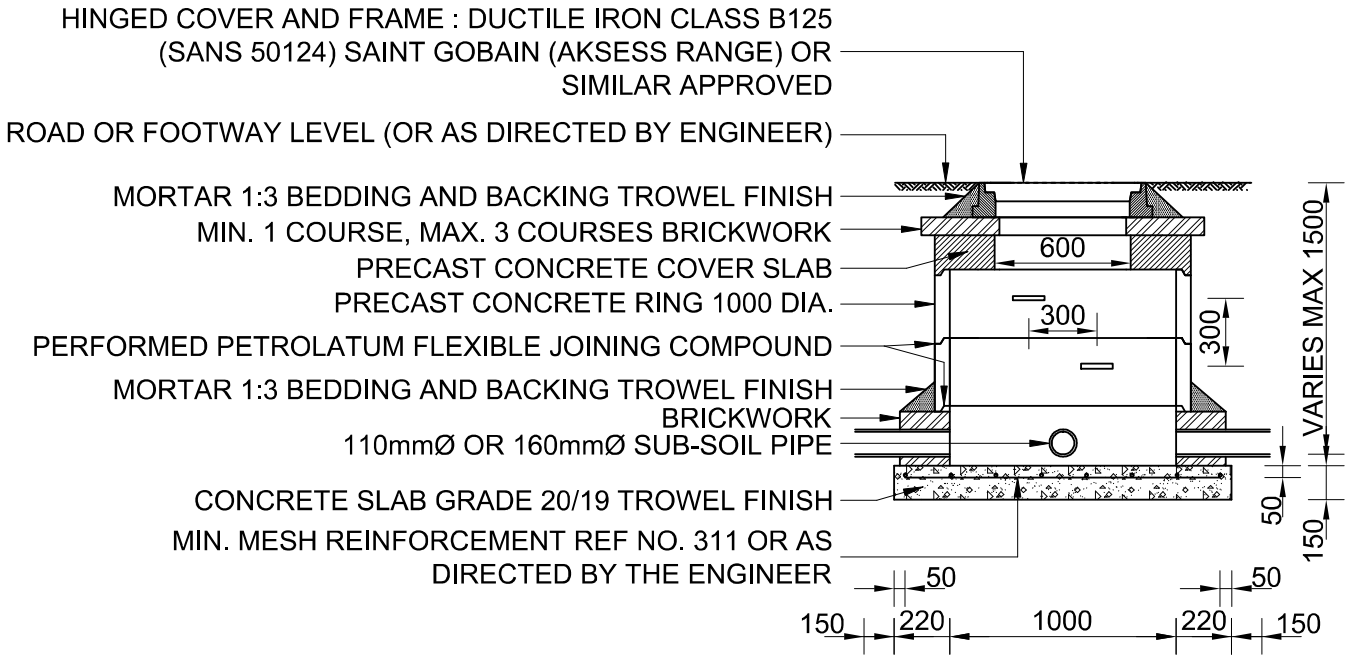

SECTION A - A

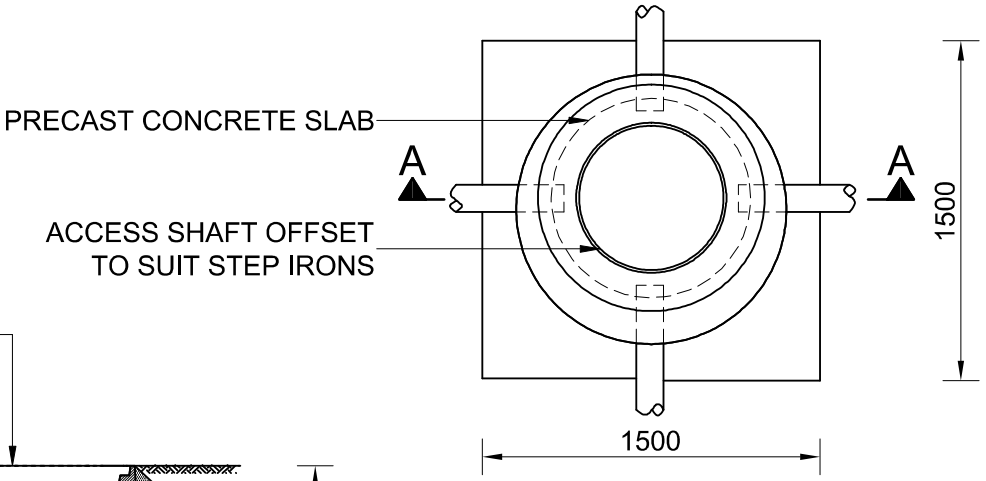

PLAN

STELLENBOSCH
STELLENBOSCH • PNIEL • FRANSCHHOEK
MUNISIPALITEIT • UMASIPALA • MUNICIPALITY

STANDARD DETAIL DRAWING

MANHOLE FOR SUB SURFACE DRAIN

Scale	Paper Size
N.T.S.	A4

Drawing No.

SSW19

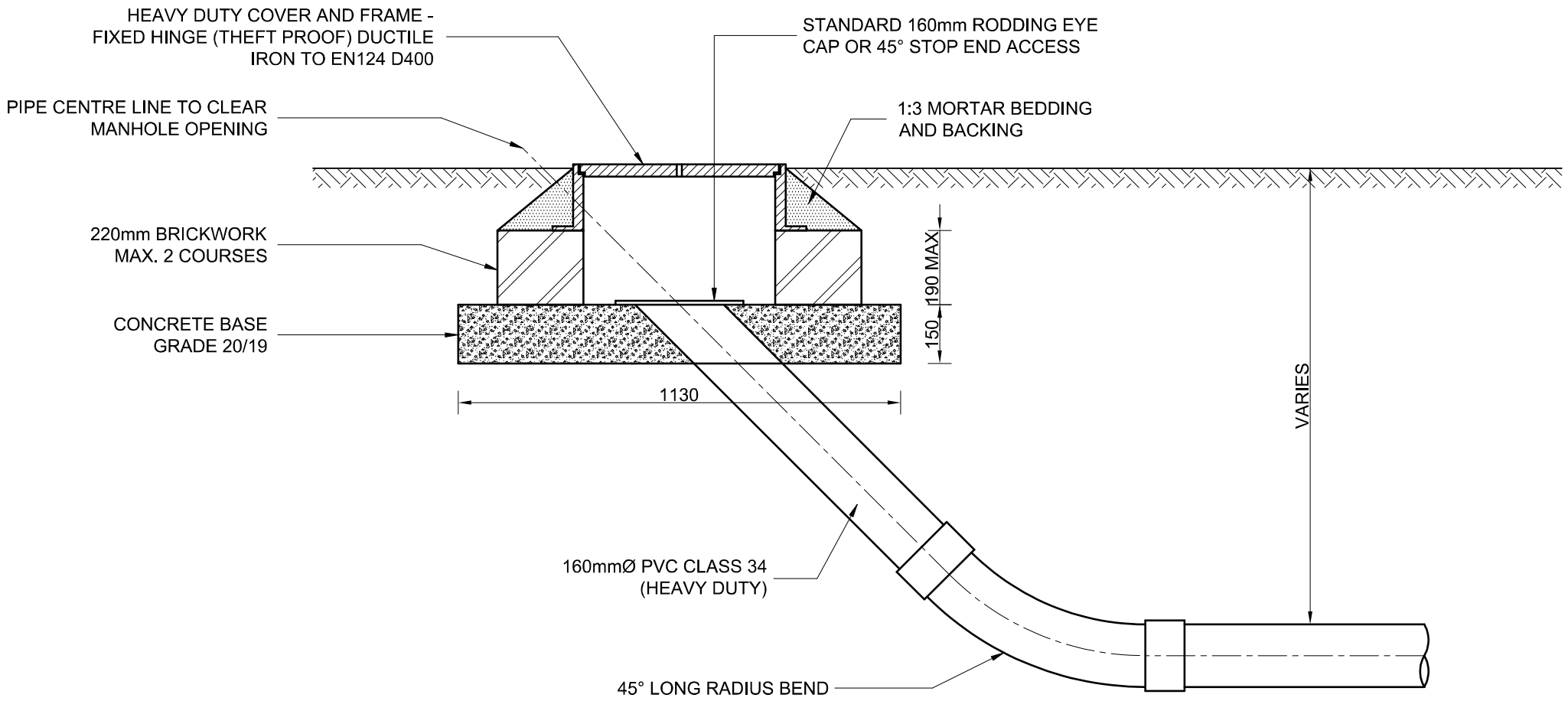

STELLENBOSCH
STELLENBOSCH • PNIEL • FRANSCHHOEK
MUNISIPALITEIT • UMASIPALA • MUNICIPALITY

STANDARD DETAIL DRAWING

RODDING EYE FOR SUBSOIL DRAINS

Scale	Paper Size
N.T.S.	A4

Drawing No.
SSW20

LEGEND

SBP = SHOULDER BREAK POINT

= UNLESS OTHERWISE INDICATED IN THE PROJECT SPECIFICATIONS

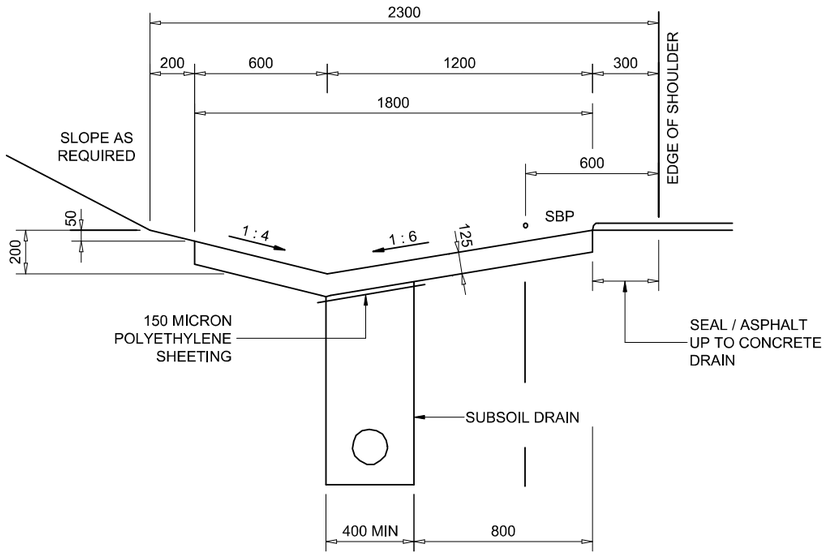

CONCRETE SIDE DRAIN

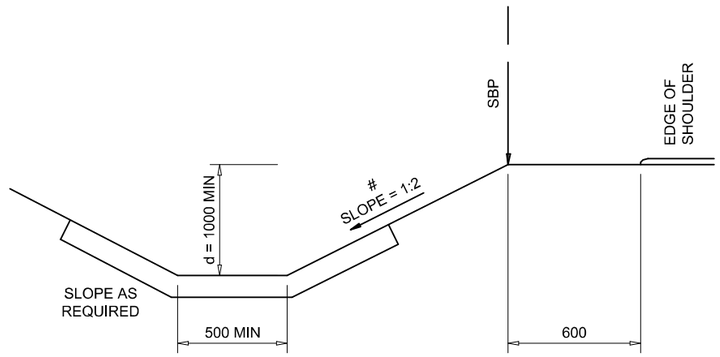

LINED

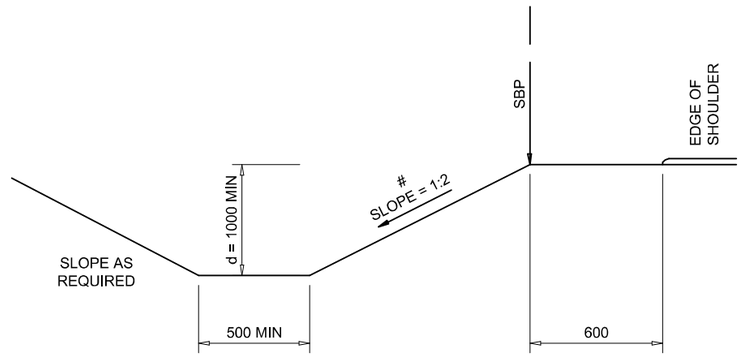

UNLINED

EARTH SIDE DRAIN

APPLICATION CRITERIA	• SLOPE < 0.5% • SLOPE > 2.0% • WHERE SPECIFIED BY THE ENGINEER	• WHERE SPECIFIED BY THE ENGINEER	• 0.5% < SLOPE < 2.0% • WHERE SPECIFIED BY THE ENGINEER
SUBSOIL DRAIN	COMPULSORY	• WHERE SPECIFIED BY THE ENGINEER SUBJECT TO APPROVAL OF STELLENBOSCH MUNICIPALITY	• WHERE SPECIFIED BY THE ENGINEER SUBJECT TO APPROVAL OF STELLENBOSCH MUNICIPALITY

STELLENBOSCH
STELLENBOSCH • PNIEL • FRANSCHHOEK
MUNISIPALITEIT • UMASIPALA • MUNICIPALITY

STANDARD DETAIL DRAWING

EARTH SIDE DRAINS (1 OF 2)

Scale	Paper Size
N.T.S.	A3

Drawing No.
SSW21

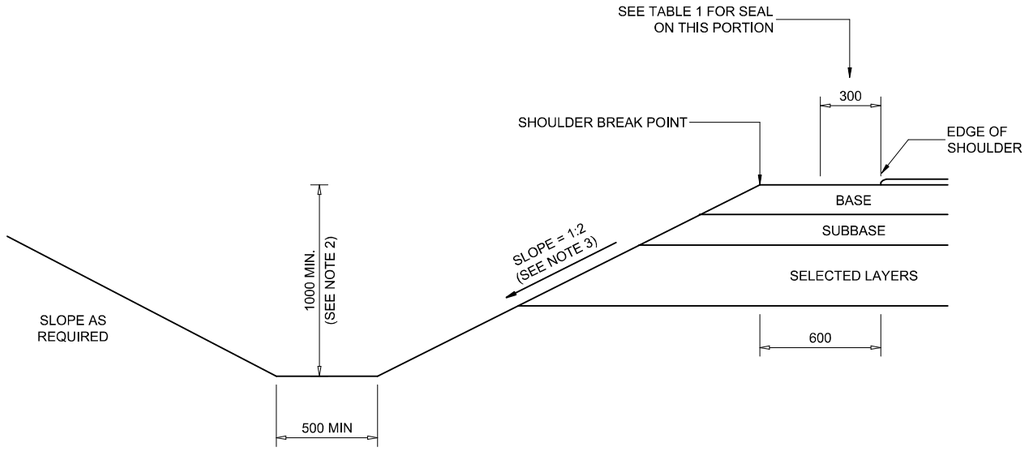

UNLINED EARTH SIDE DRAIN

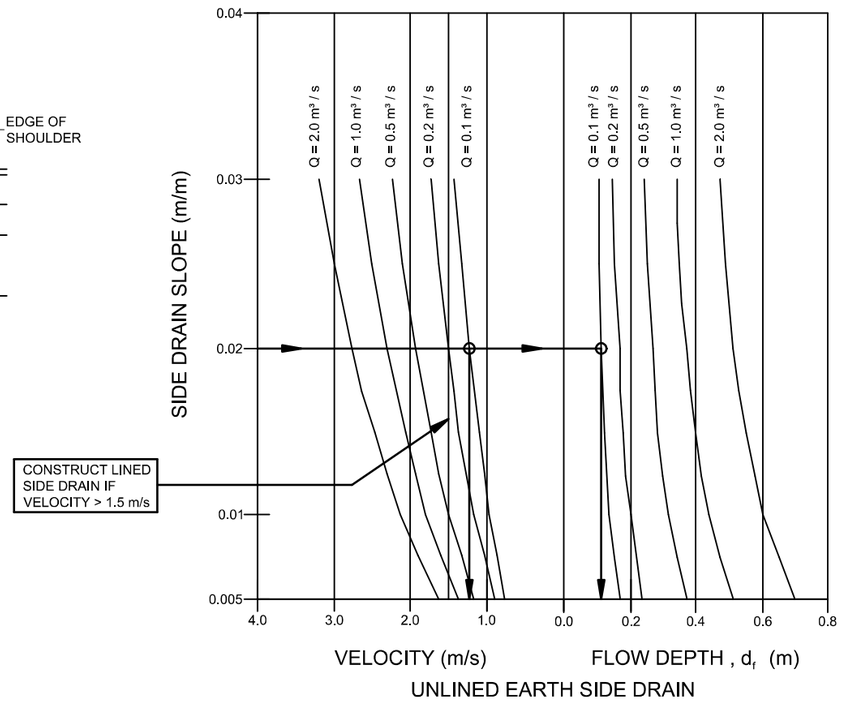

CONSTRUCT LINED SIDE DRAIN IF VELOCITY > 1.5 m/s

UNLINED EARTH SIDE DRAIN

TABLE 1	
BITUMINOUS SURFACING	APPLICATION
CAPE SEAL DOUBLE SEAL ASPHALT	PRIME COAT + 2nd SLURRY PRIME COAT + 7mm STONE PRIME COAT

CONSTANTS USED IN CALCULATIONS	
INVERT WIDTH	= 0.5m
CUT SLOPE	= 1:1.5
MANNING CONSTANT	= 0.22 FOR UNLINED DRAINS = 0.012 FOR CONCRETE LINED DRAINS

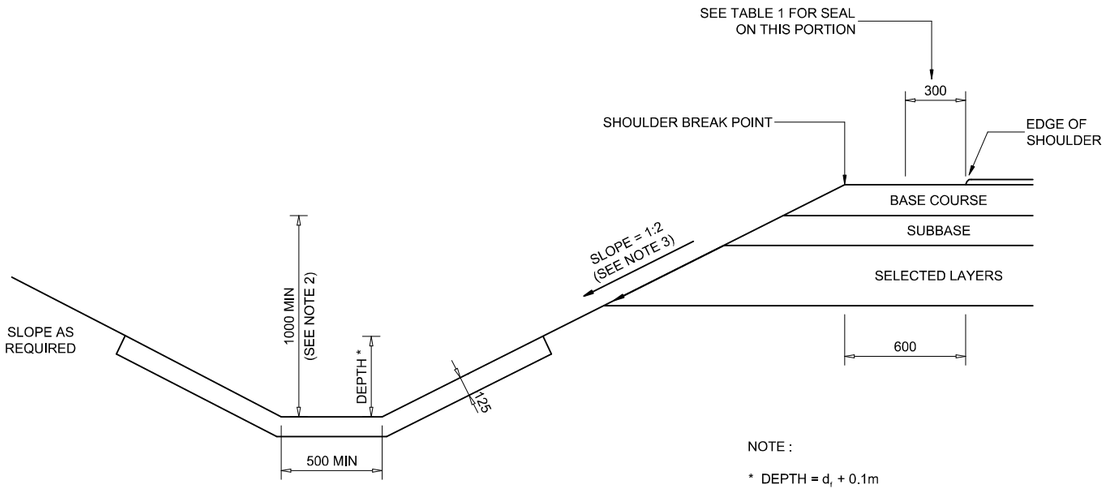

NOTE :

* DEPTH = d_l + 0.1m

WHERE d_l = FLOW DEPTH FROM LINED EARTH SIDE DRAIN DIAGRAM

LINED EARTH SIDE DRAIN

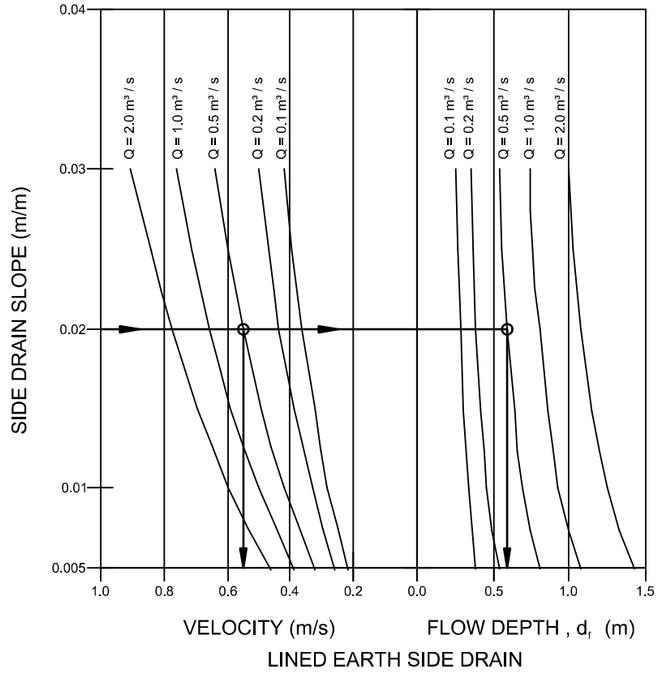

LINED EARTH SIDE DRAIN

NOTES :

1. APPLICATION CRITERIA
   (a) 0.5% < SLOPE < 2.0%
   (b) IF REQUIRED BY THE ENGINEER
2. USE THE UNLINED EARTH SIDE DRAIN DIAGRAM TO DETERMINE WHETHER A LINED SIDE DRAIN IS REQUIRED.
3. WHERE THIS DEPTH CANNOT BE ACHIEVED, SHALLOWER DEPTH MAY BE PERMITTED SUBJECT TO APPROVAL BY THE ENGINEER. IN SUCH CASES THE ENGINEER MUST DETERMINE WHETHER A SUBSOIL DRAIN IS REQUIRED.
4. UNLESS OTHERWISE INDICATED IN THE PROJECT SPECIFICATION.

STELLENBOSCH
STELLENBOSCH • PNIEL • FRANSCHHOEK
MUNISIPALITEIT • UMASIPALA • MUNICIPALITY

STANDARD DETAIL DRAWING

EARTH SIDE DRAINS (2 OF 2)

Scale	Paper Size
N.T.S.	A3

Drawing No.
SSW22

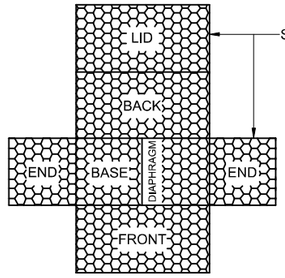

FIGURE 1

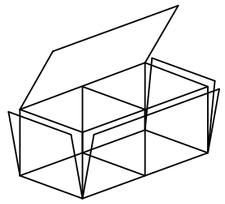

FIGURE 2

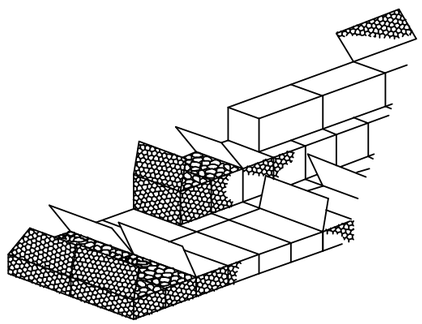

FIGURE 4

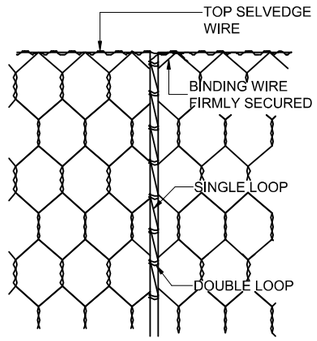

FIGURE 3

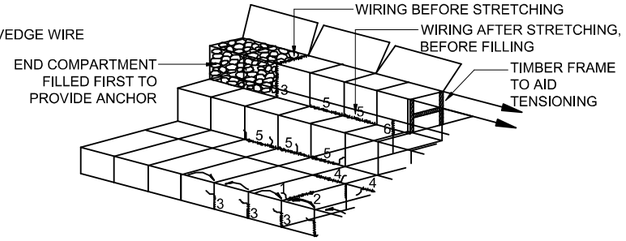

FIGURE 5

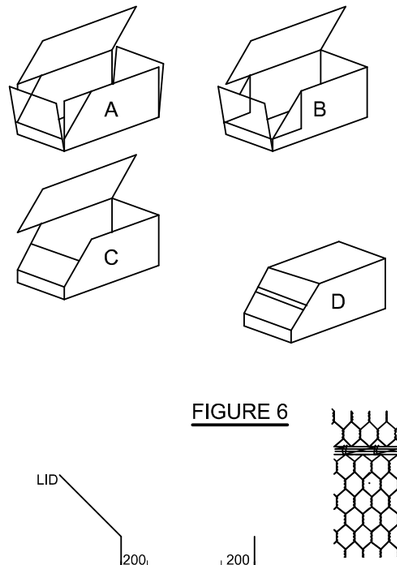

FIGURE 6

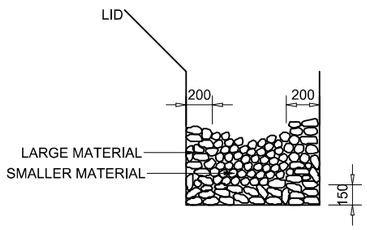

FIGURE 7

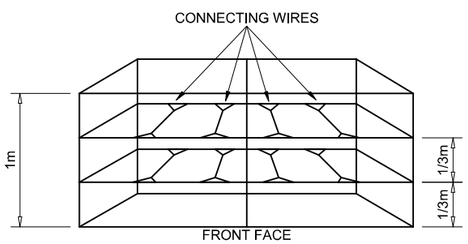

FIGURE 8

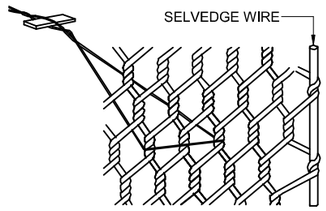

FIGURE 9

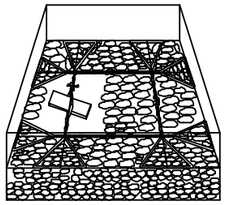

FIGURE 10

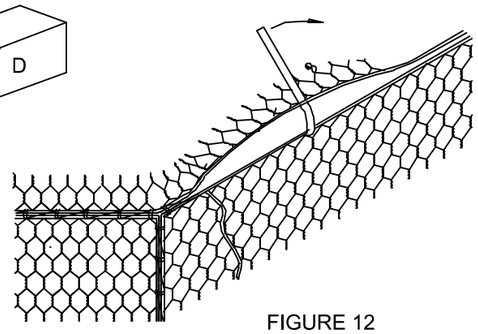

FIGURE 12

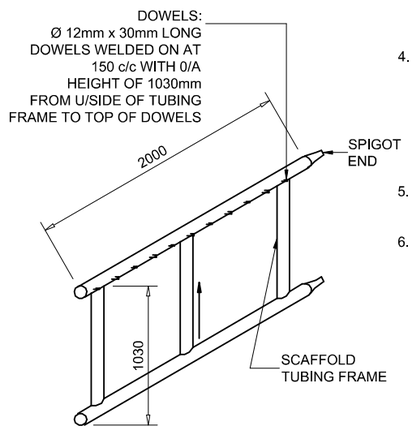

FIGURE 11

ASSEMBLY :

1. UNFOLD EACH GABION ON A HARD FLAT SURFACE. STRECH IT OUT AND STAMP OUT ANY KINKS. MAKE SURE THAT ALL CREASES ARE IN THE CORRECT POSITIONS FOR FORMING THE BOX - ONE AT THE EDGE OF EACH PANEL AND EACH DIAPHRADM (FIGURE 1).

2. FOLD THE SIDE AND END PANELS INTO THE UPRIGHT POSITION TO FORM A RECTANGULAR BOX. JOIN THE TOP CORNERS OF THE BOX TOGETHER WITH THE THICK SELVEDGE WIRE STICKING OUT FROM THE CORNERS OF EACH PANEL. THIS ENSURES THAT THE TOPS OF ALL FOUR SIDES OF THE BOX ARE LEVEL (FIGURE 2).

3. SECURING THE BINDING WIRE AROUND THE TOP SELVEDGES OF THE PANELS TO BE JOINED TOGETHER, LACE THE WIRE AROUND THE TWO EDGE SELVEDGES WITH SINGLE LOOPS IN TURN AT 100mm INTERVALS (FIGURE 3). FINALLY, FASTEN THE WIRE SECURELY AT THE BOTTOM CORNER SELVEDGES AND POKE THE LOOSE END INSIDE THE GABION BOX. THEN LIFT THE DIAPHRAGMS INTO THE VERTICAL POSITION AND WIRE THEM UP TO THE SIDE PANELS IN EXACTLY THE SAME WAY. THE TIGHTNESS OF THE MESH AND WIRING IS ESSENTIAL AT ALL TIMES.

4. IT IS GOOD CONSTRUCTION PRACTICE TO LACE SMALL GROUPS OF GABION BOXES TOGETHER AS COMPLETE SECTIONS BEFORE JOINING THEM TO THE REST OF THE STRUCTURE, USING EXACTLY THE SAME METHOD AS FOR ASSEMBLING SINGLE BOXES. PLACE THEM FRONT TO FRONT AND BACK TO BACK, SO THAT PAIRS OF FACING LIDS CAN LATER BE WIRED DOWN SIMULTANEDUSLY (FIGURE 4).

FORMING THE STRUCTURE :

1. THE SURFACE ON WHICH THE GABION BOXES ARE TO BE CONSTRUCTED, SHALL BE LEVELLED TO THE SPECIFIED DEPTH SO AS TO PRESENT AN EVEN SURFACE. CAVITIES BETWEEN HARD PROTRUSIONS SHALL BE FILLED WITH MATERIAL SIMILAR TO THAT BEING USED FOR FILLING THE GABIONS.

2. ONLY ASSEMBLED BOXES, OR GROUPS OF BOXES, SHALL BE POSITIONED IN THE STRUCTURE. THE SIDE OR END, FROM WHICH WORK IS TO PROCEED, SHALL BE SECURELY LACED TO COMPLETED WORK AY ALL DIAPHRAGM POINTS (FIGURE 5), OR ANCHORED BY RODS DRIVEN INTO THE GROUND AT THESE POSITIONS. THE RODS MUST BE SECURED AND REACH AT LEAST TO THE TOP OF THE GABION BOX.

3. STRECH THE OPPOSITE SIDE OF THE BOX OR SECTION BY INSERTING BARS INTO THE BOTTOM CORNERS AND LEVERING THEM FORWARDS BY MEANS OF A WIRE STRAINER OR WINCH. THE TOP AND BOTTOM ARE THEN KEPT STRETCHED IN THIS WAY UNTIL THE GABION HAS BEEN FILLED. WHILE THE GABION IS BEING STRETCHED, ENSURE THAT THE OPPOSITE WIRING OR ANCHORING HAS BEEN PROPERLY CARRIED OUT AND IS NOT PULLING APART OR COLLAPSING (FIGURE 5). THE NEXT STEP IS TO WIRE ALL THE OTHER SIDES AND ENDS OF THE STRETCHED SECTION TO ADJOINING ALREADY FILLED GABIONS (FIGURE 5). THE STRONG INTER-CONNECTION OF ALL UNITS IN A GABION STRUCTURE IS AN IMPORTANT FEATURE OF THE TECHNIQUE AND IT IS THEREFORE ESSENTIAL THAT THE WIRING IS SECURE.

4. WHERE GABION STRUCTURES WITH NON-RECTANGULAR SHAPES ARE SPECIFIED, MODIFICATIONS TO THE BOXES ARE REQUIRED. GABION BOXES ARE FLEXIBLE ENOUGH TO CONFORM TO BENDS DOWN TO A RADIUS OF 25m WITHOUT WIRING. FIRST WIRE A NUMBER OF BOXES TOGETHER AND BEND THEM UP TO THE CURVE SET OUT PREVIOUSLY, HOLDING THEM IN POSITION DURING FILLING. OTHER SHAPES, BEVELS AND MITRES, SHOULD BE FORMED BY CUTTING AND FOLDING THE PANELS TO THE REQUIRED ANGLES AND SIZES (FIGURE 6).

ROCK FILLING :

1. FILLING SHOULD BE CARRIED OUT ONLY WHILST GABION BOXES ARE UNDER TENSION.

2. FILLING MATERIAL SHOULD BE HARD DURABLE STONE NOT LARGER THAN 250mm AND NOT SMALLER THAN THE SIZE OF THE MASH. IDEALLY THE STONE SHOULD BE JUST SLIGHTLY LARGER THAN THE MESH SIZE IN ORDER TO ALLOW FLEXIBILITY IN THE STRUCTURE BUT AT THE SAME TIME FILLS THE GABOIN COMPARTMENTS WITH THE MINIMUM OF VOIDS AND THE MAXIMUM MASS.

3. IN AREAS WHERE LARGE ENOUGH FILL IS DIFFICULT TO OBTAIN, THE COMPARTMENT IS LINED WITH LARGE MATERIAL AND THE INTERIOR FILLED WITH SMALLER. THE SMALL MATERIAL CAN BE 5% TO 7% OF THE FILL (FIGURE 7). CARE SHALL BE TAKEN IN PACKING THE VISIBLE FACES OF GABION BOXES WHERE ONLY SELECTED STONE OF THE SPECIFIED SIZE SHALL BE USED SO AS TO OBTAIN AN EVEN FACED FINISH.

4. TO ADOID BULGING ONTHE VISIBLE SIDE OF THE STRUCTURE, FILL ALL THE OUTSIDE BOXES IN STAGES (1.0m HIGH BOXES IN THREE LEVELS AND 0.5m HIGH BOXES IN TWO LEVELS) WITH HORIZONTAL BRACING IN BETWEEN (FIGURE B). FIX THE BRACING WIRES IN THE GABION BOX DIRECTLY ABOVE THE STONE LEVEL MAKING SURE THE WIRE PASSES ROUND AT LEAST TWO MESH WIDTHS AND "SPANISH" WINDLASS THE BRACING WIRES TO KEEP THE FACE EVEN AND FREE FROM BULGING (FIGURE 9). BRACING IN BOTH DIRECTIONS SHOULD BE USED IN GABIONS AT CORNERS OF STRUCTURES (FIGURE 10). AS AN ADDITIONAL MEASURE, SCAFFOLD PLANKING AS SHUTTERING ALONG THE FRONT FACE OR A PRE-FABRICATED SCAFFOLD TUBING FRAME SYSTEM CAN BE USED (FIGURE 11).

5. LEVEL OFF THE FILL 25mm TO 50mm ABOVE THE TOP OF THE MESH TO ALLOW FOR SETTLEMENT. SMALL MATERIAL IS BEST FOR THIS.

6. STRETCH THE LIDS TIGHTLY OVER THE FILLING USING A CROWBAR. SECURE THE CORNERS FIRST, BY MEANS OF THE THICK SELVEDGE WIRE PROTRUDING FROM THE LID CORNERS. TO ENSURE THAT THERE IS ENOUGH MESH TO COVER THE WHOLE AREA. SOME FILLING MAY HAVE TO BE REMOVED FROM THE TOP OF THE GABION BOX TO PREVENT THE LID FROM OVERSTRAINING, THEN SECURELY WIRE IT TO THE TOPS OF THE SIDES, ENDS AND DIAPHRAGMS, USING THE ALTENATE SINGLE AND DOUBLE LOOPS (FIGURE 12).

STELLENBOSCH
STELLENBOSCH • PNIEL • FRANSCHHOEK
MUNISIPALITEIT • UMASIPALA • MUNICIPALITY

STANDARD DETAIL DRAWING

ASSEMBLY AND ERECTION OF GABION BOXES

Scale	Paper Size
N.T.S.	A3

Drawing No.
SSW23

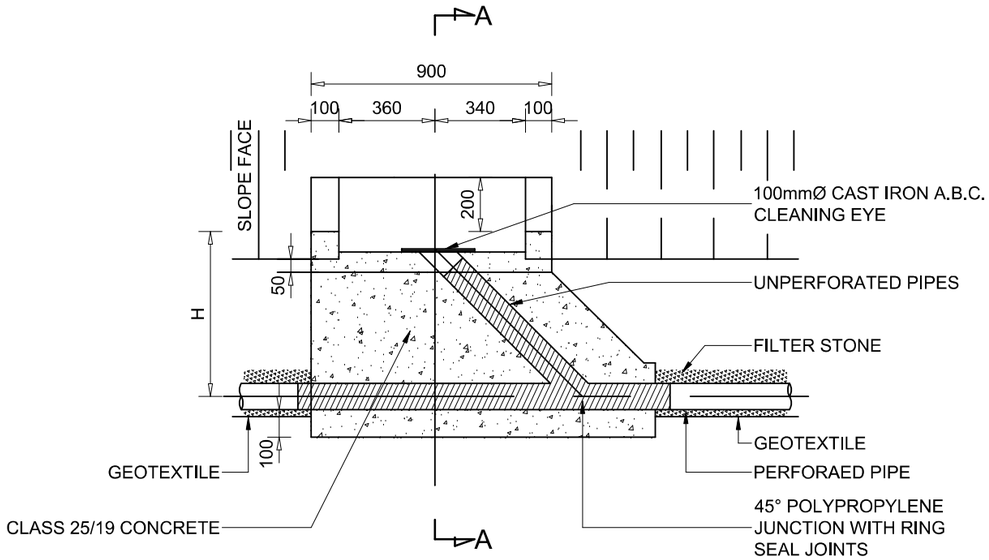

SECTION B - B

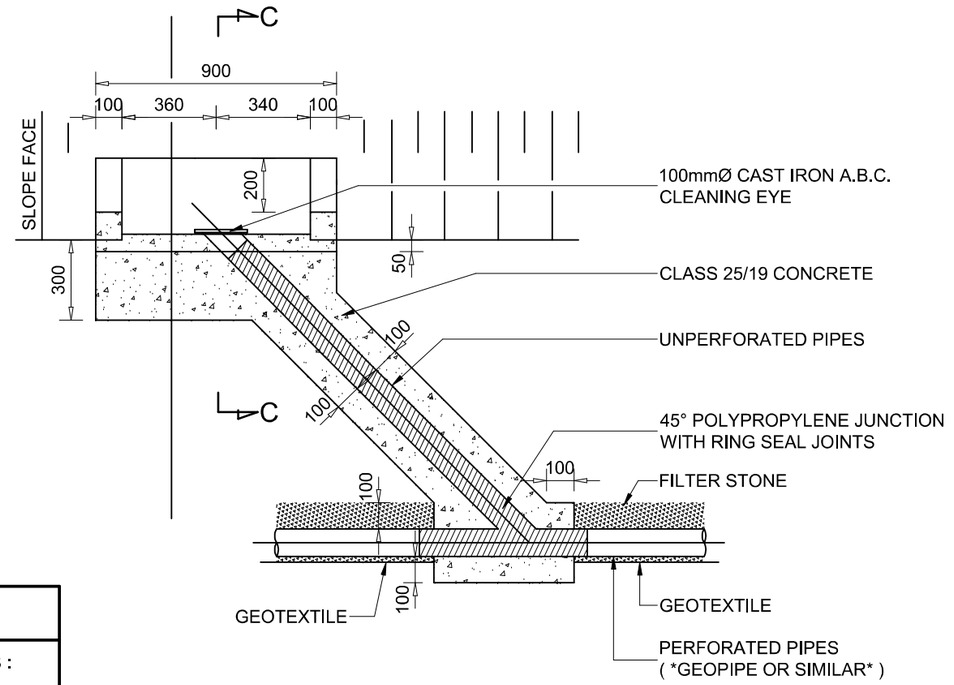

SECTION D - D

NOTES

1. POSITION OF CLEANING EYES :

   (a) WHERE NO HAZARD IS CAUSED TO TRAFFIC OR MAINTENANCE IN THE ROAD RESERVE
   (b) CLEARLY VISIBLE

2. MAXIMUM SPACING : 100m

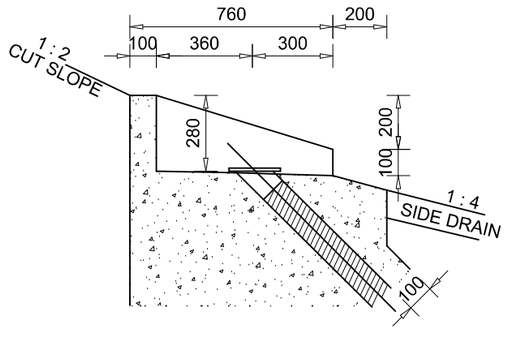

SECTION A - A

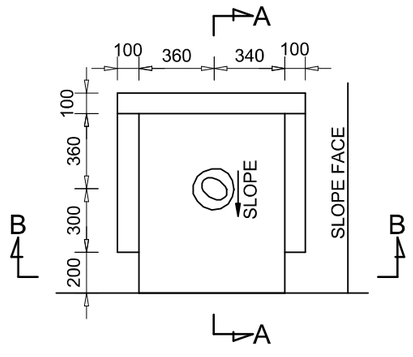

PART PLAN

CLEANING EYE TYPE 1 (H ≤ 1000)

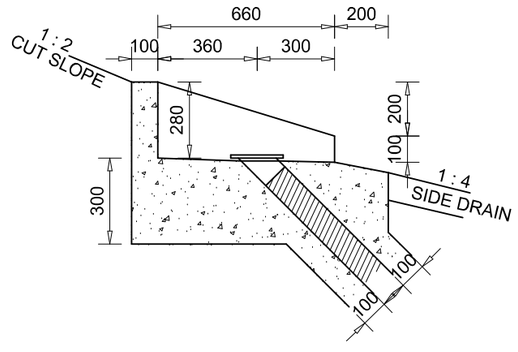

SECTION C - C

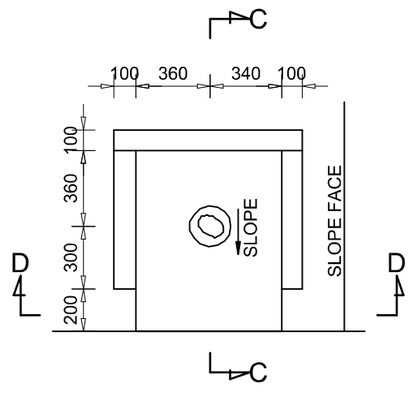

PART PLAN

CLEANING EYE TYPE 2 (H > 1000)

STELLENBOSCH
STELLENBOSCH • PNIEL • FRANSCHHOEK
MUNISIPALITEIT • UMASIPALA • MUNICIPALITY

STANDARD DETAIL DRAWING

TYPICAL DETAILS OF CLEANING EYES

Scale	Paper Size
N.T.S.	A3

Drawing No.
SSW24

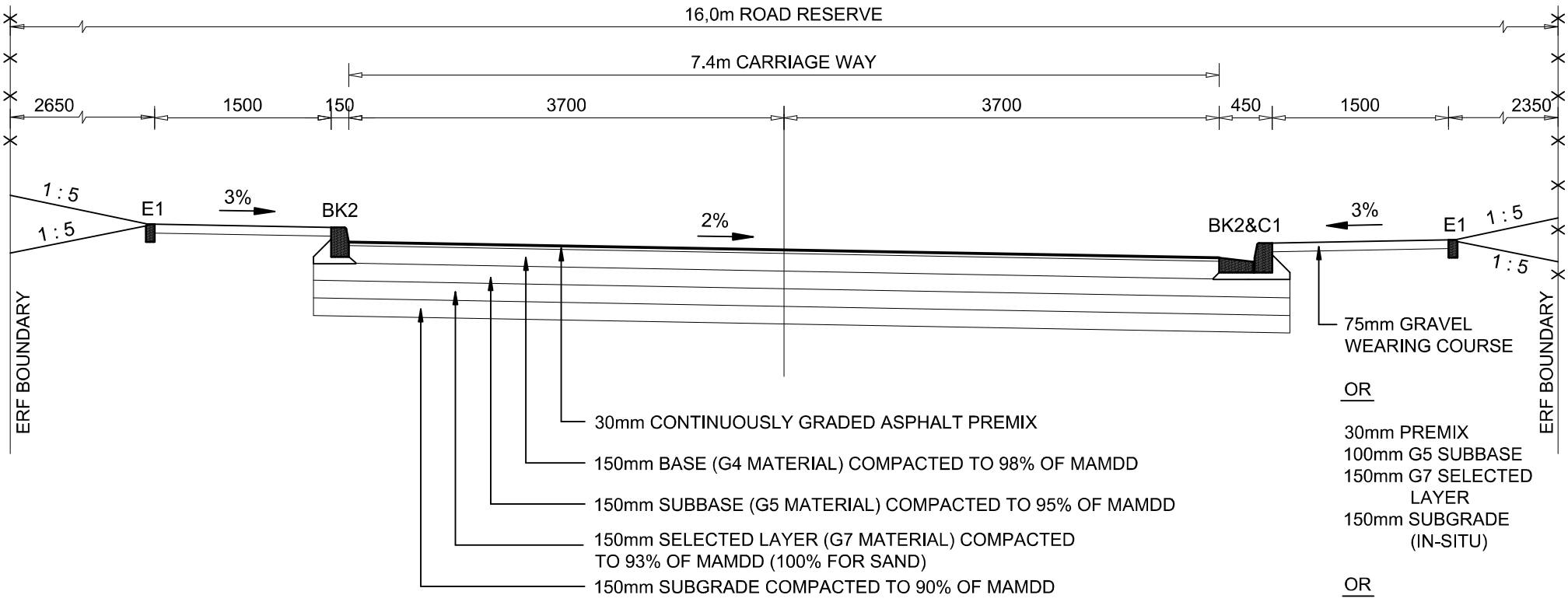

NOTE:

MAMDD: MODIFIED AASHTO MAXIMUM DRY DENSITY

STELLENBOSCH
STELLENBOSCH • PNIEL • FRANSCHHOEK
MUNISIPALITEIT • UMASIPALA • MUNICIPALITY

STANDARD DETAIL DRAWING

TYPICAL CROSS SECTION OF ROAD

Scale	Paper Size
1 : 50	A4

Drawing No.

SR1

NOTE: MINIMUM HEIGHT FROM FINAL GROUND LEVEL TO TOP OF SIGN = 2200mm

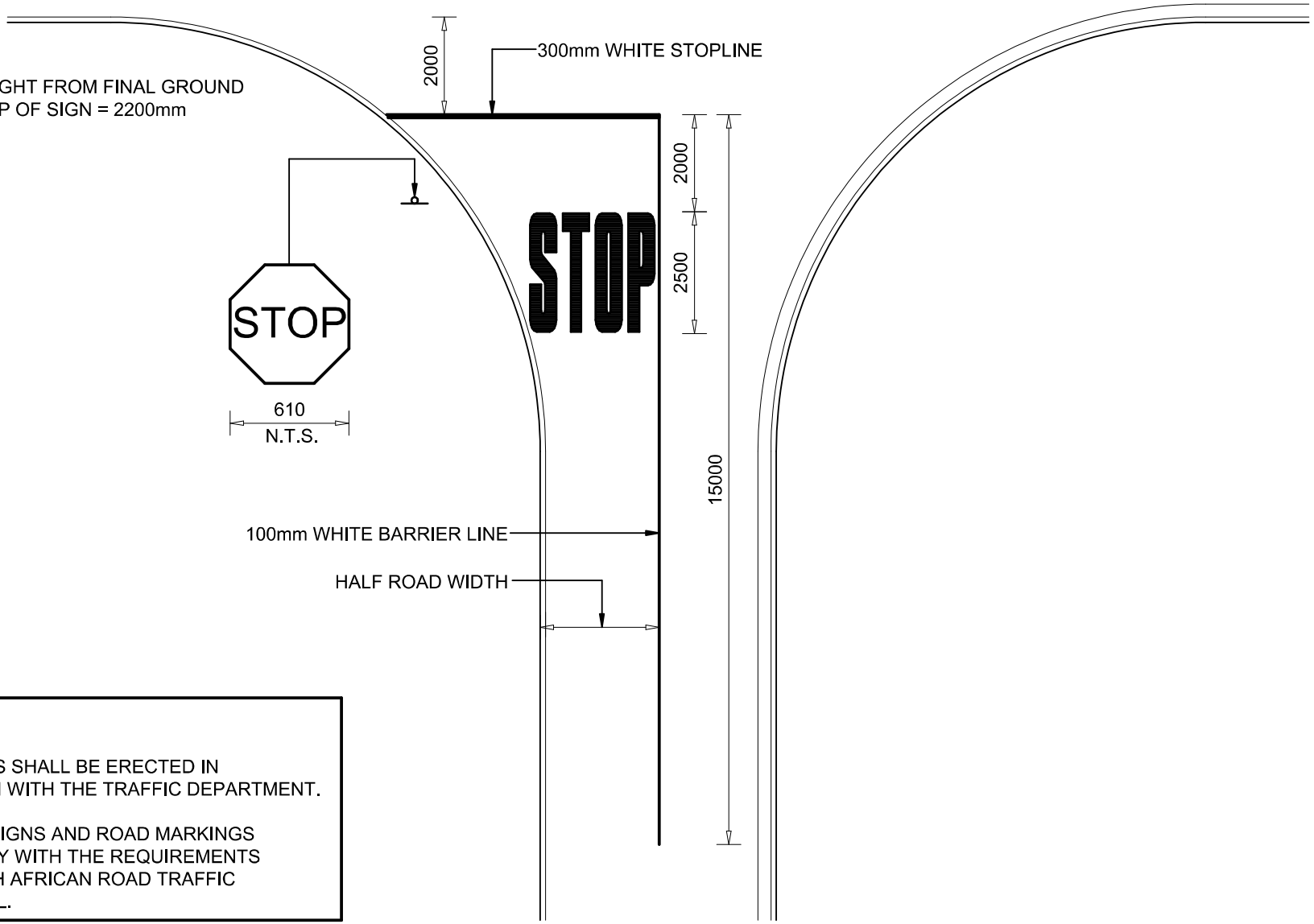

NOTES:

1. TRAFFIC SIGNS SHALL BE ERECTED IN CONJUNCTION WITH THE TRAFFIC DEPARTMENT.

2. ALL TRAFFIC SIGNS AND ROAD MARKINGS SHALL COMPLY WITH THE REQUIREMENTS OF THE SOUTH AFRICAN ROAD TRAFFIC SIGNS MANUAL.

STELLENBOSCH
STELLENBOSCH • PNIEL • FRANSCHHOEK
MUNISIPALITEIT • UMASIPALA • MUNICIPALITY

STANDARD DETAIL DRAWING

TYPICAL STOP CONTROLLED INTERSECTION

Scale	Paper Size
1 : 125	A4

Drawing No.
SR2

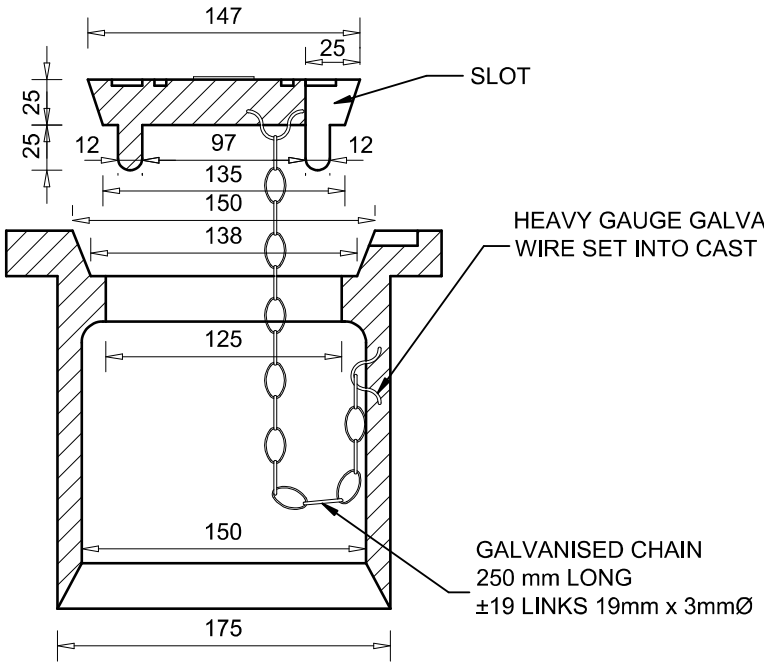

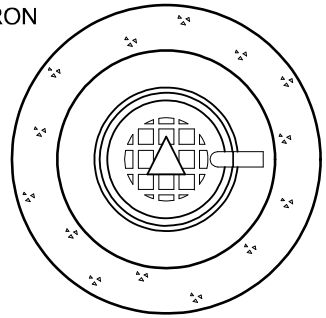

PLAN

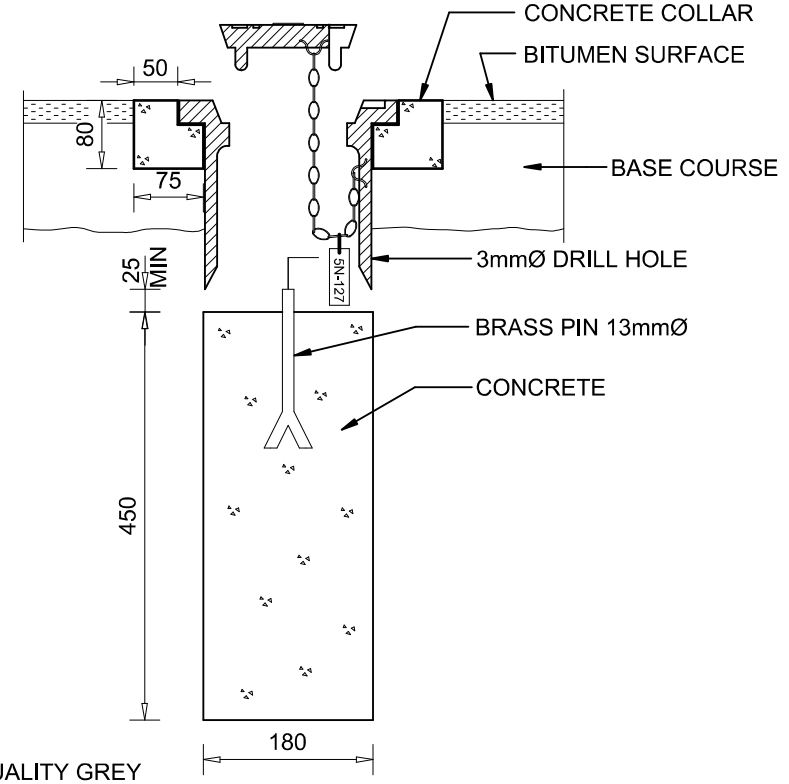

SECTION

1. DIMENSIONS AND TOLERANCES

1.1 ALL CASTINGS, CHAINS AND CHAIN STAPLES SHALL CONFORM TO THE RELEVANT DIMENSIONAL REQUIREMENTS GIVEN ON THE PLAN.

1.2 COVERS AND FRAMES SHALL BE FREE FROM TWIST, SHALL BE SO FINISHED THAT COVERS REST EVENLY ON INTENDED MUTUAL BEARING SURFACES AND SHALL NOT ROCK. WHEN FITTED TO FRAMES, COVERS SHALL FIT SUFFICIENTLY LOOSELY TO BE RETAINED IN POSITION BY WEIGHT ONLY. THE TOP SURFACES OF COVERS, INCLUDING ANTI-SLIP PROJECTIONS, SHALL NOT PROTRUDE ABOVE, NOR BE MORE THAN 1,5mm BELOW THE TOPS OF ASSOCIATED FRAMES.

2. MATERIAL AND FINISH

2.1 CASTINGS SHALL BE MANUFACTURED IN GOOD QUALITY GREY CAST IRON AND NOT OF IRON WHICH APPEARS WHITE ON FRACTURE. ALL CASTINGS SHALL BE SOUND, HOMOGENEOUS AND FREE FROM SAND AND BLOW-HOLES, COLD SHUTS, SCAB AND OTHER DEFECTS.

2.2 THE CHEMICAL ANALYSIS OF GREY CAST IRON IS GIVEN IN THE FOLLOWING TABLE:

CARBON %	SILICON %	SULPHUR % MAX	PHOSPHORUS % MAX	MANGANESE %
3.5 - 4.0	1.25 - 2.0	0.05	0.02	0.75 - 1.0

2.3 CHAINS AND CHAIN STAPLES SHALL BE MILD STEEL.

2.4 ALL CONCRETE TO BE OF CLASS 20/19.

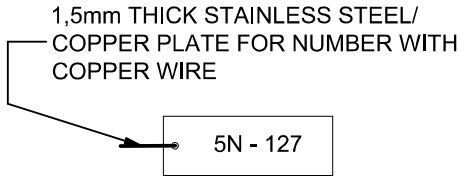

TAG FOR NUMBER

STELLENBOSCH
STELLENBOSCH • PNIEL • FRANSCHHOEK
MUNISIPALITEIT • UMASIPALA • MUNICIPALITY

STANDARD DETAIL DRAWING

TOWN SURVEY MARK

Scale	Paper Size
N.T.S.	A4

Drawing No.

SR3

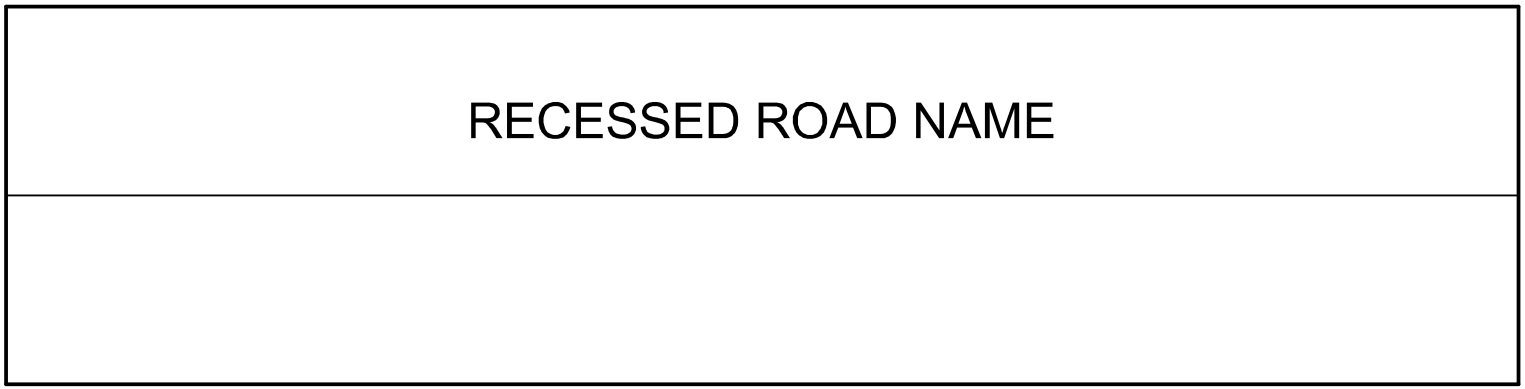

FRONT ELEVATION

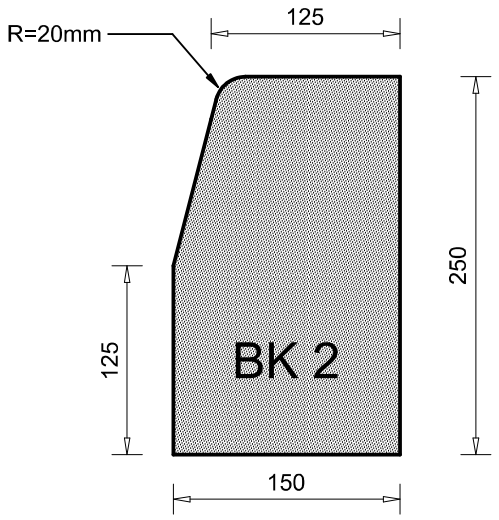

SECTION A-A

NOTES:

1. TEXT TYPE DIN A, TEXT HEIGHT 75mm
2. BLACK LETTERING ON YELLOW REFLECTIVE BACKGROUND. USING ROAD MARKING PAINT ACCORDING TO SABS 731 - 1987

STELLENBOSCH
STELLENBOSCH • PNIEL • FRANSCHHOEK
MUNISIPALITEIT • UMASIPALA • MUNICIPALITY

STANDARD DETAIL DRAWING

ROAD NAME KERB (1 OF 2)

Scale	Paper Size
1 : 5	A4

Drawing No.
SR4

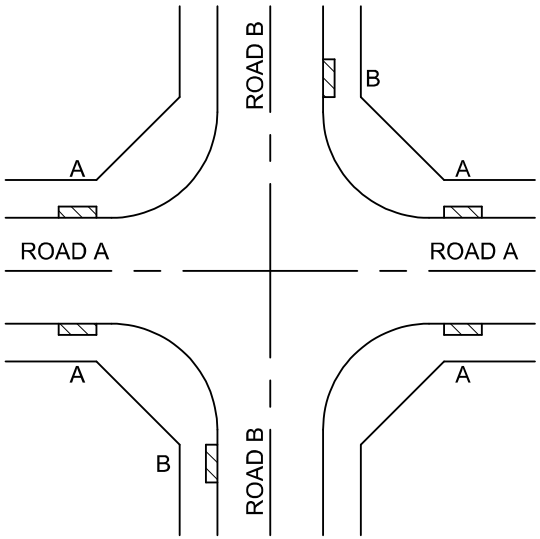

2 ROAD NAMES

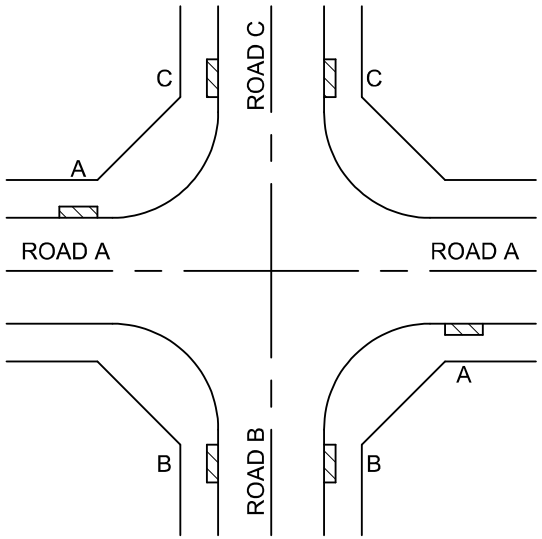

3 ROAD NAMES

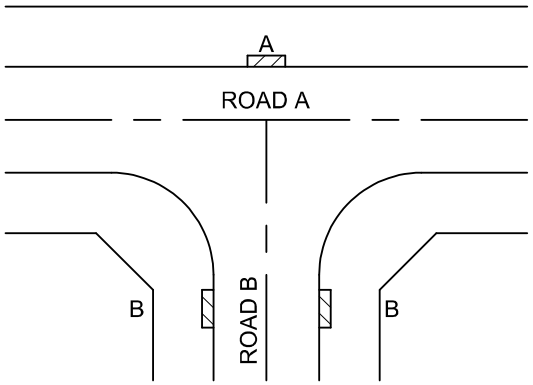

ROAD NAMES
OPPOSITE INTERSECTING ROAD

PLAN VIEW SHOWING ROAD NAME KERB POSITIONS

NOTES:

1. ▨ DENOTES THE POSITION OF THE PRECAST ROAD NAME KERB
2. THE LETTER DENOTES THE RELATIVE ROAD NAME TO APPEAR ON THE UNIT
3. RESESSED LETTERS PAINTED BLACK AND THE REMAINDER OF KERB TO HAVE A YELLOW BACKGROUND.

STELLENBOSCH
STELLENBOSCH • PNIEL • FRANSCHHOEK
MUNISIPALITEIT • UMASIPALA • MUNICIPALITY

STANDARD DETAIL DRAWING

ROAD NAME KERB (2 OF 2)

Scale	Paper Size
N.T.S.	A4

Drawing No.
SR5

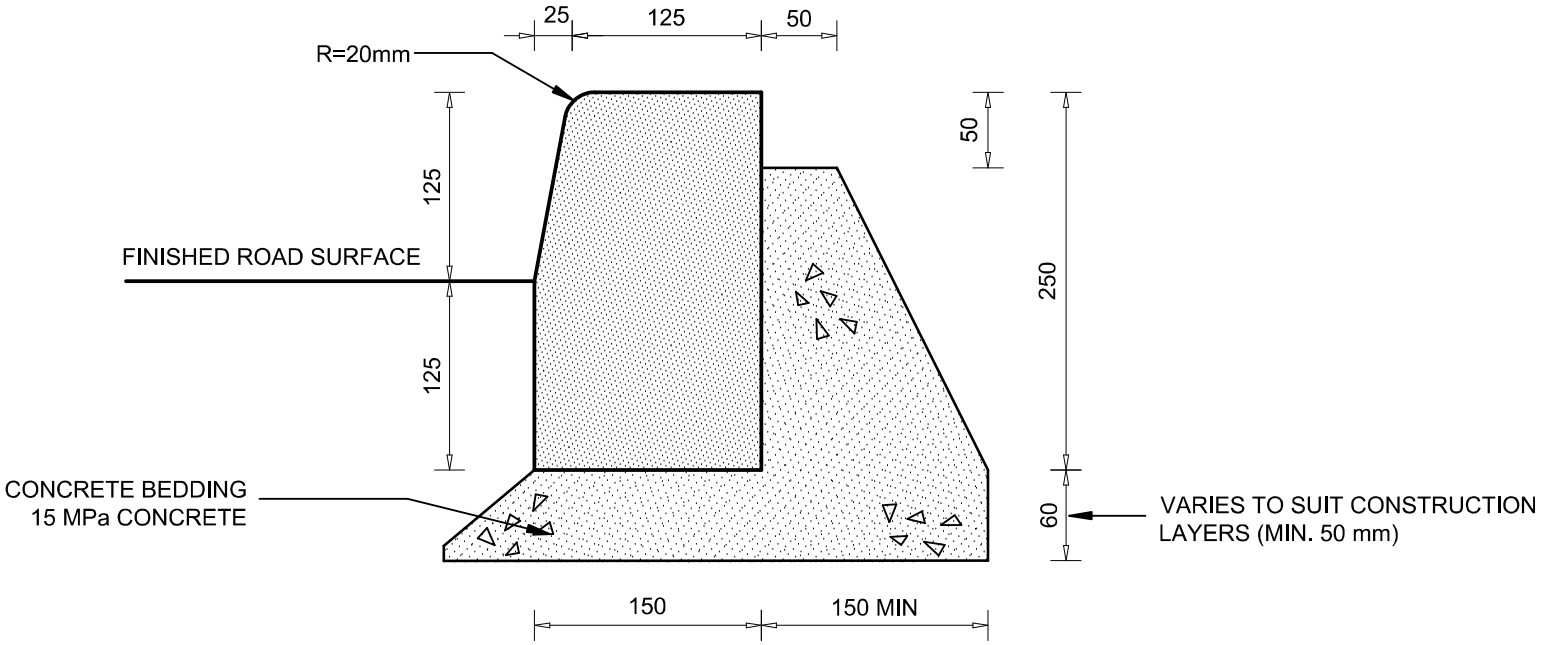

STELLENBOSCH
STELLENBOSCH • PNIEL • FRANSCHHOEK
MUNISIPALITEIT • UMASIPALA • MUNICIPALITY

STANDARD DETAIL DRAWING

BARRIER KERB : TYPE BK2

Scale	Paper Size
1 : 5	A4

Drawing No.
SR6

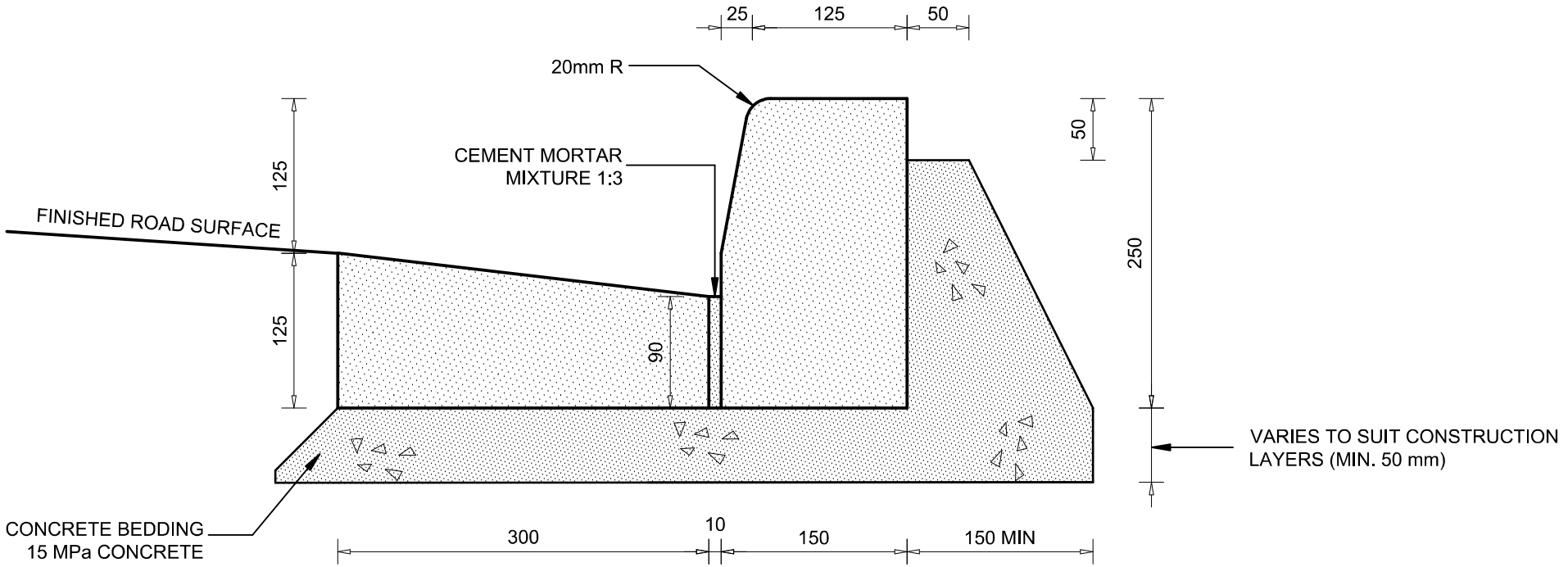

STELLENBOSCH
STELLENBOSCH • PNIEL • FRANSCHHOEK
MUNISIPALITEIT • UMASIPALA • MUNICIPALITY

STANDARD DETAIL DRAWING

BARRIER KERB : TYPE BK2 & C1

Scale	Paper Size
1 : 5	A4

Drawing No.

SR7

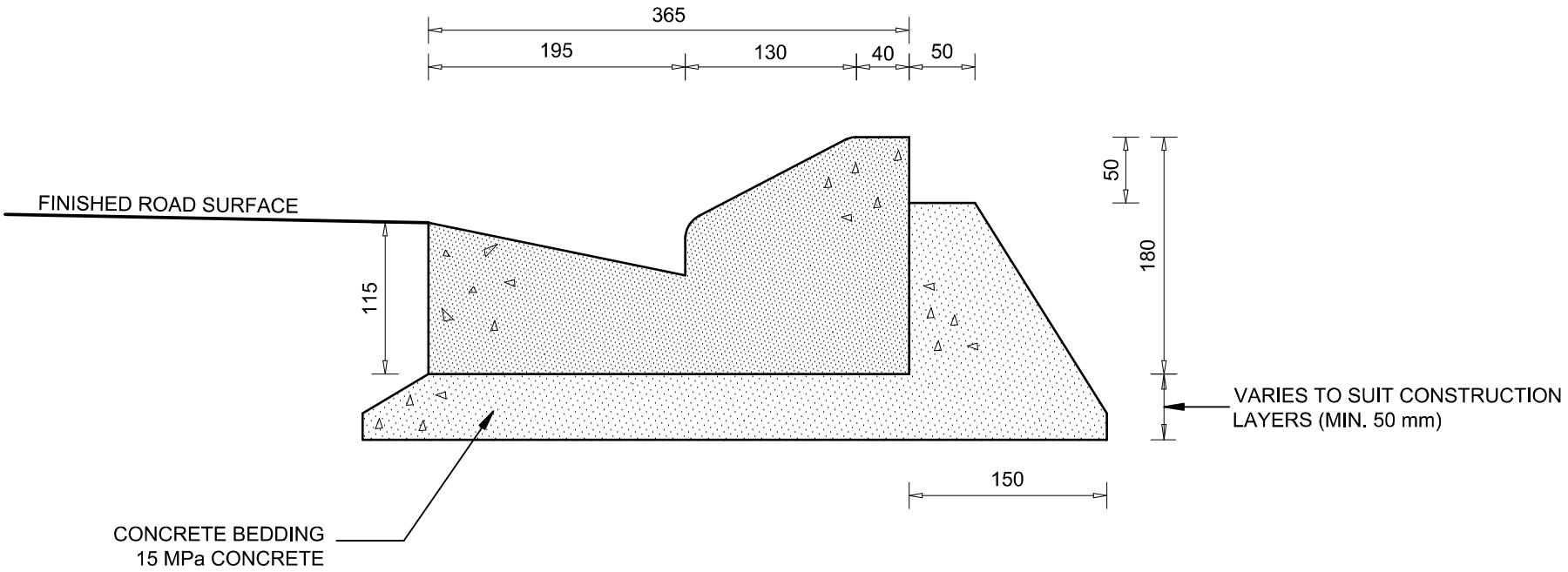

STELLENBOSCH
STELLENBOSCH • PNIEL • FRANSCHHOEK
MUNISIPALITEIT • UMASIPALA • MUNICIPALITY

STANDARD DETAIL DRAWING

MOUNTABLE KERB : TYPE CK5

Scale	Paper Size
1 : 5	A4

Drawing No.
SR8

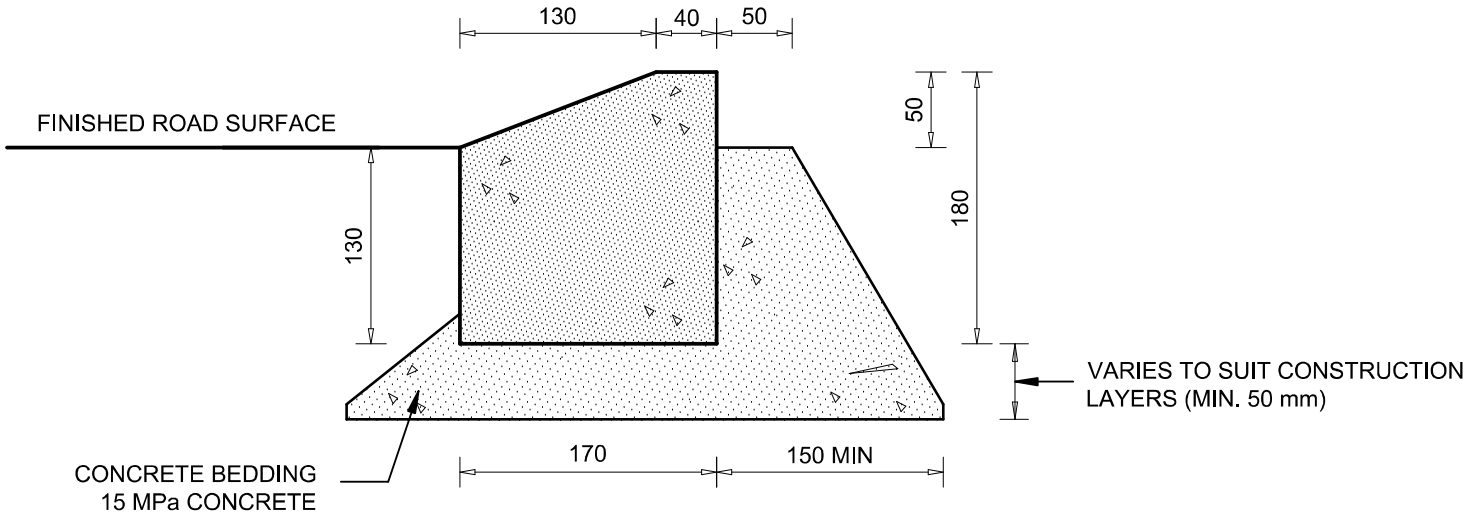

STELLENBOSCH
STELLENBOSCH • PNIEL • FRANSCHHOEK
MUNISIPALITEIT • UMASIPALA • MUNICIPALITY

STANDARD DETAIL DRAWING

Scale	Paper Size
1 : 5	A4

MOUNTABLE KERB : TYPE MK10

Drawing No.
SR9

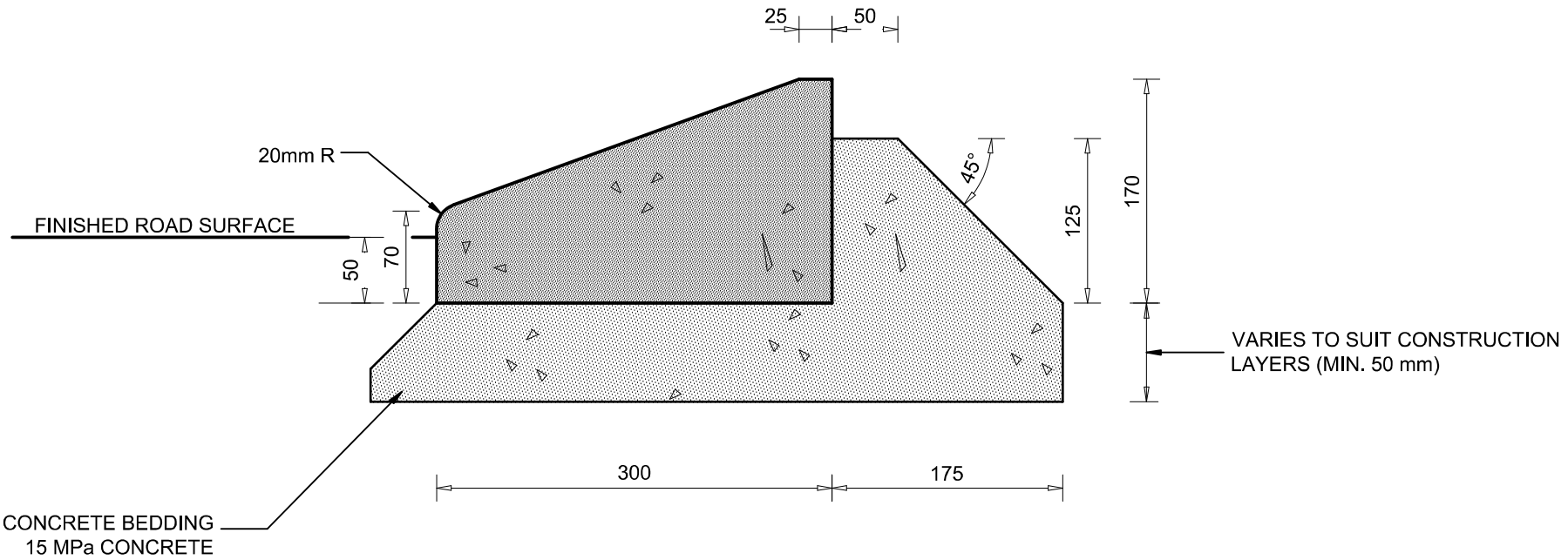

STELLENBOSCH
STELLENBOSCH • PNIEL • FRANSCHHOEK
MUNISIPALITEIT • UMASIPALA • MUNICIPALITY

STANDARD DETAIL DRAWING

MOUNTABLE KERB : TYPE MK7

Scale	Paper Size
1 : 5	A4

Drawing No.
SR10

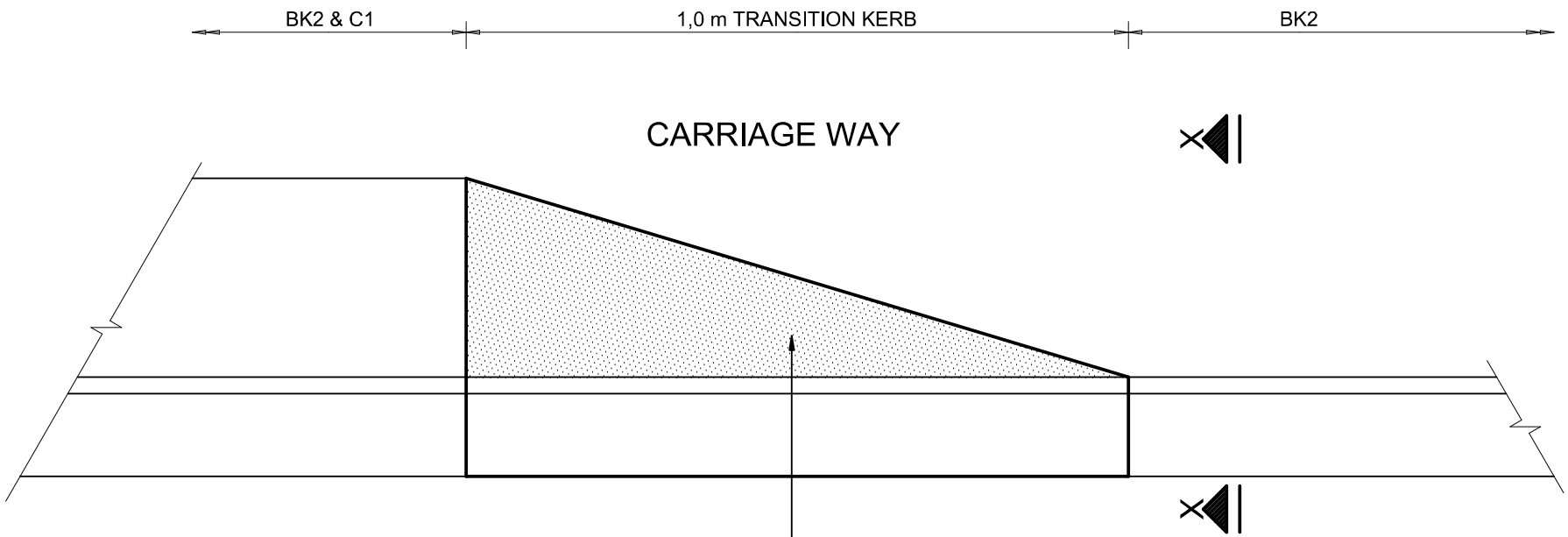

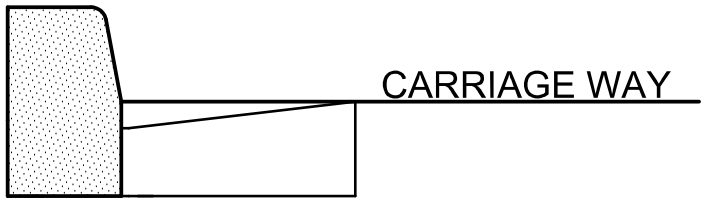

NOTE:
ALL EXPOSED SURFACES TO HAVE
A STEEL FLOAT FINISH

SECTION X - X

STELLENBOSCH
STELLENBOSCH • PNIEL • FRANSCHHOEK
MUNISIPALITEIT • UMASIPALA • MUNICIPALITY

STANDARD DETAIL DRAWING

TRANSITION KERB: BK2 & C1 - BK2

Scale	Paper Size
1 : 10	A4

Drawing No.
SR11

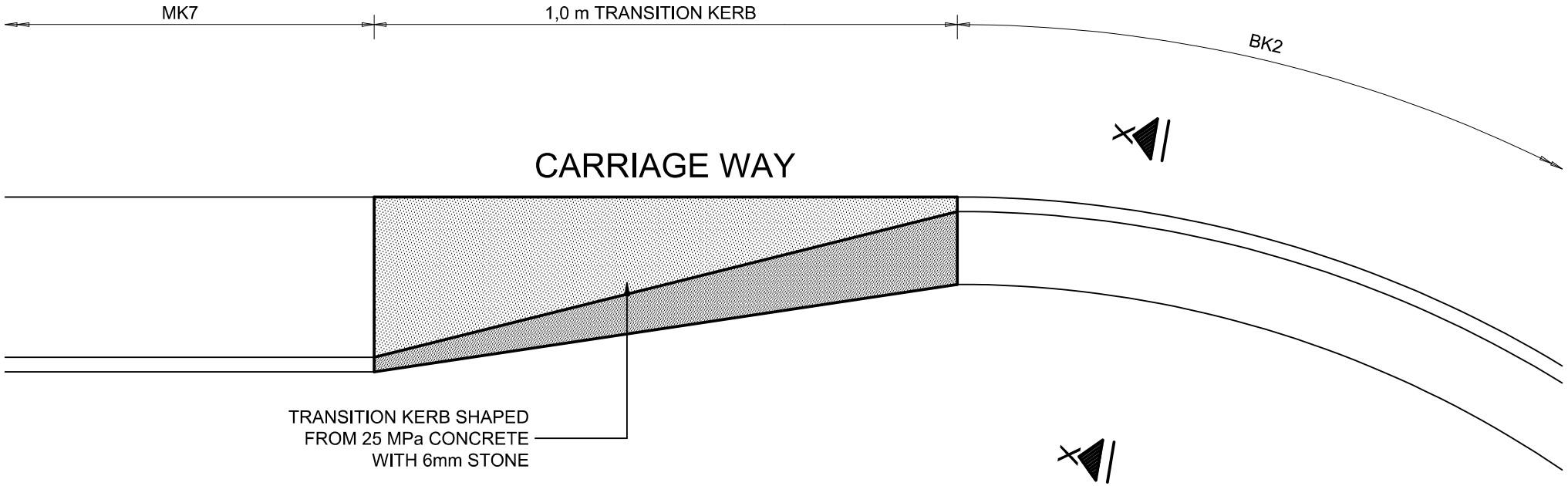

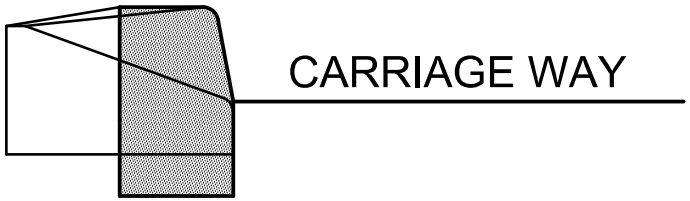

SECTION X - X

NOTE:

ALL EXPOSED SURFACES TO HAVE
A STEEL FLOAT FINISH

STELLENBOSCH
STELLENBOSCH • PNIEL • FRANSCHHOEK
MUNISIPALITEIT • UMASIPALA • MUNICIPALITY

STANDARD DETAIL DRAWING

TRANSITION KERB : MK7 - BK2

Scale	Paper Size
1 : 10	A4

Drawing No.

SR12

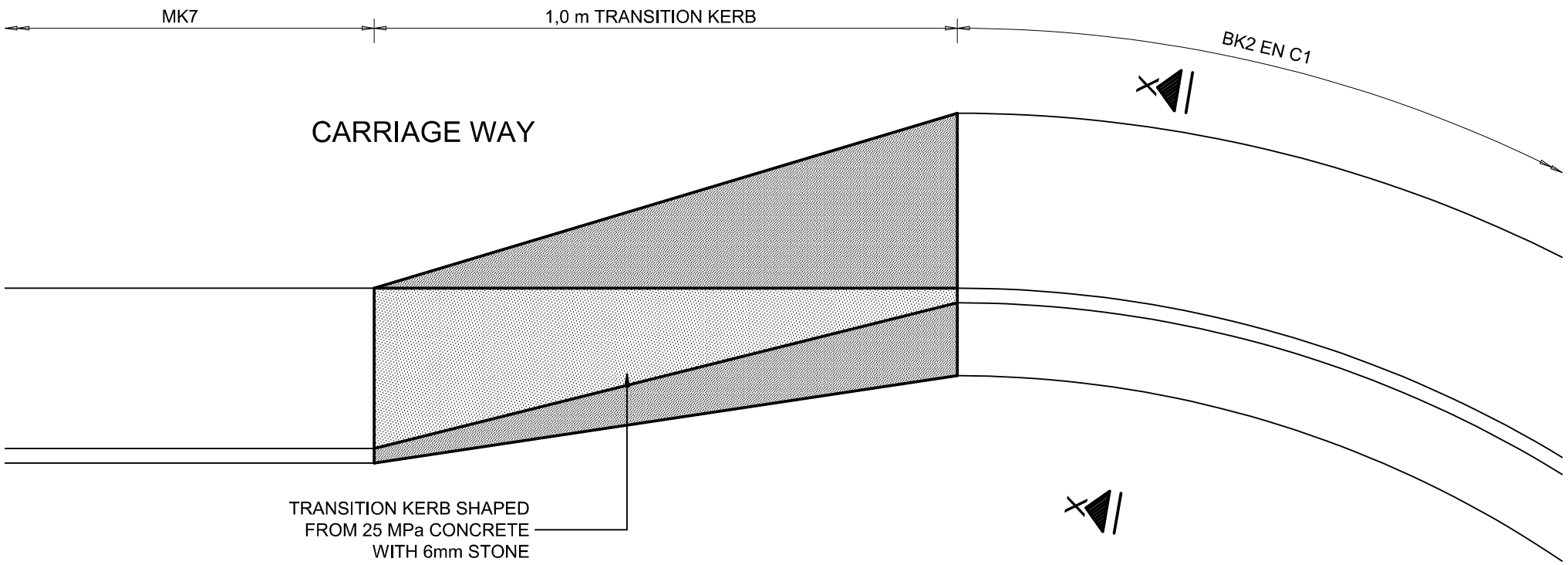

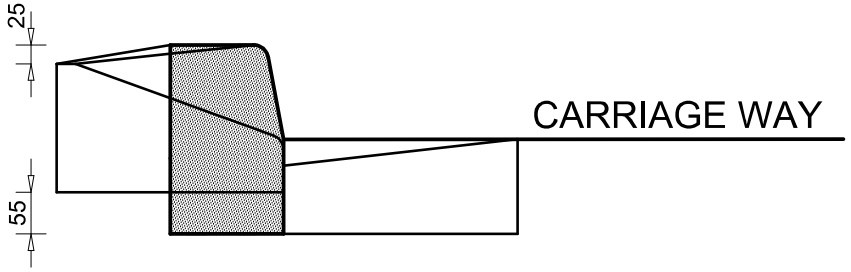

SECTION X - X

NOTE:

ALL EXPOSED SURFACES TO HAVE A STEEL FLOAT FINISH

STELLENBOSCH
STELLENBOSCH • PNIEL • FRANSCHHOEK
MUNISIPALITEIT • UMASIPALA • MUNICIPALITY

STANDARD DETAIL DRAWING

TRANSITION KERB : MK7 - BK2 & C1

Scale	Paper Size
1 : 10	A4

Drawing No.

SR13

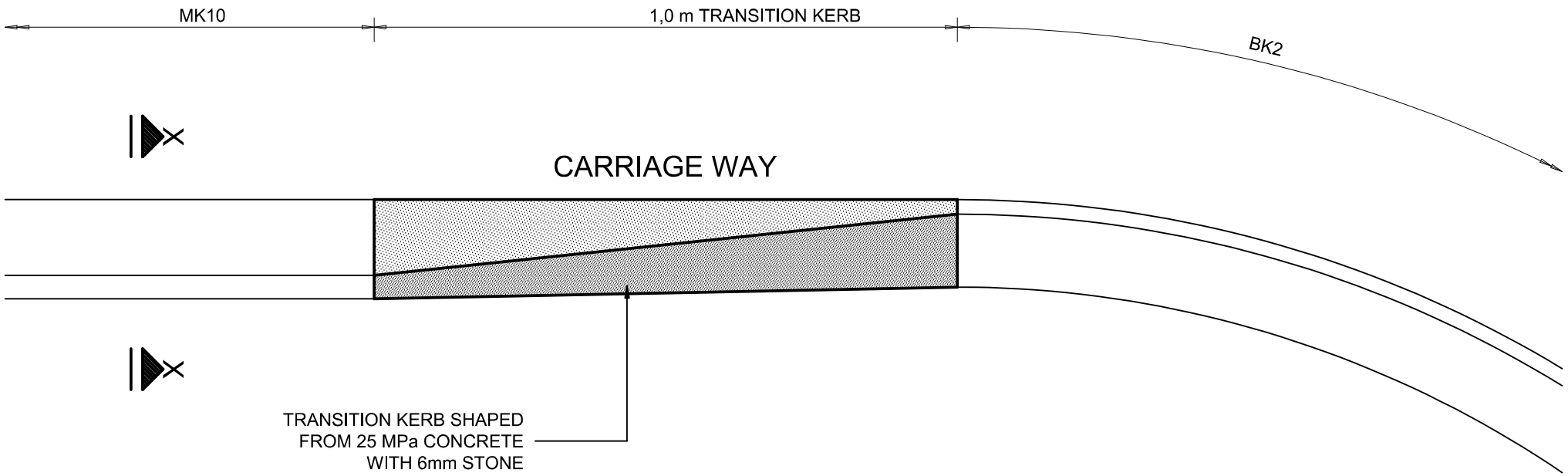

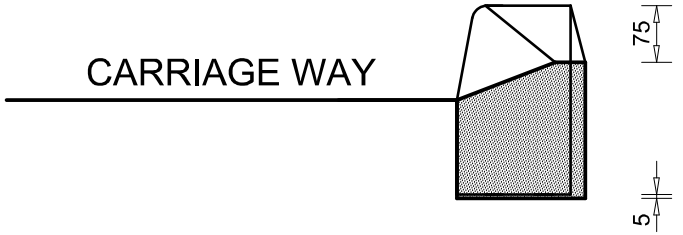

SECTION X - X

NOTE:

ALL EXPOSED SURFACES TO HAVE A STEEL FLOAT FINISH

STELLENBOSCH
STELLENBOSCH • PNIEL • FRANSCHHOEK
MUNISIPALITEIT • UMASIPALA • MUNICIPALITY

STANDARD DETAIL DRAWING

TRANSITION KERB : MK10 - BK2

Scale	Paper Size
1 : 10	A4

Drawing No.

SR14

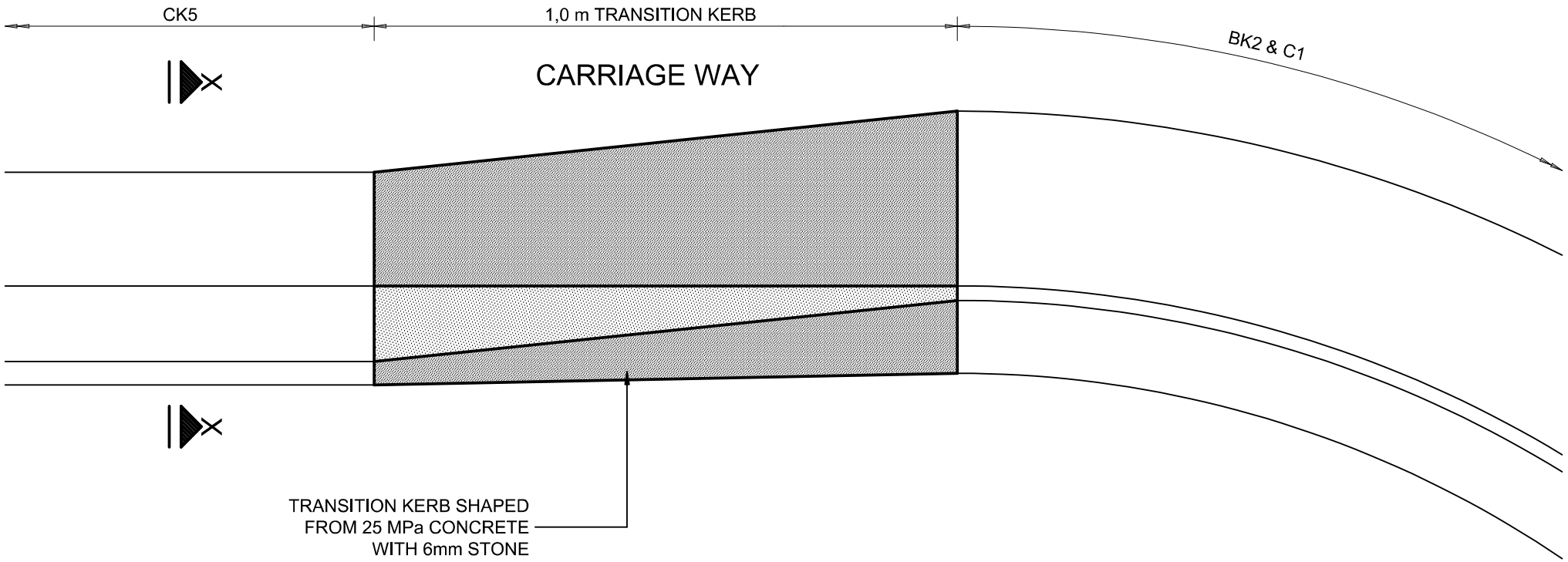

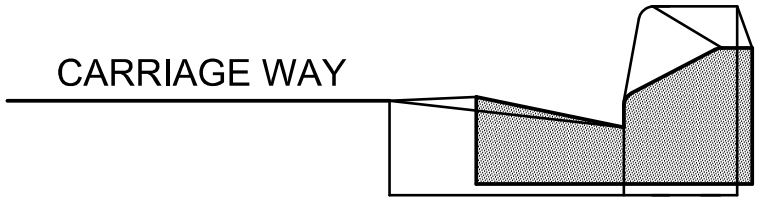

SECTION X - X

NOTE:

ALL EXPOSED SURFACES TO HAVE A STEEL FLOAT FINISH

STELLENBOSCH
STELLENBOSCH • PNIEL • FRANSCHHOEK
MUNISIPALITEIT • UMASIPALA • MUNICIPALITY

STANDARD DETAIL DRAWING

TRANSITION KERB : CK5 - BK2 & C1

Scale	Paper Size
1 : 10	A4

Drawing No.

SR15

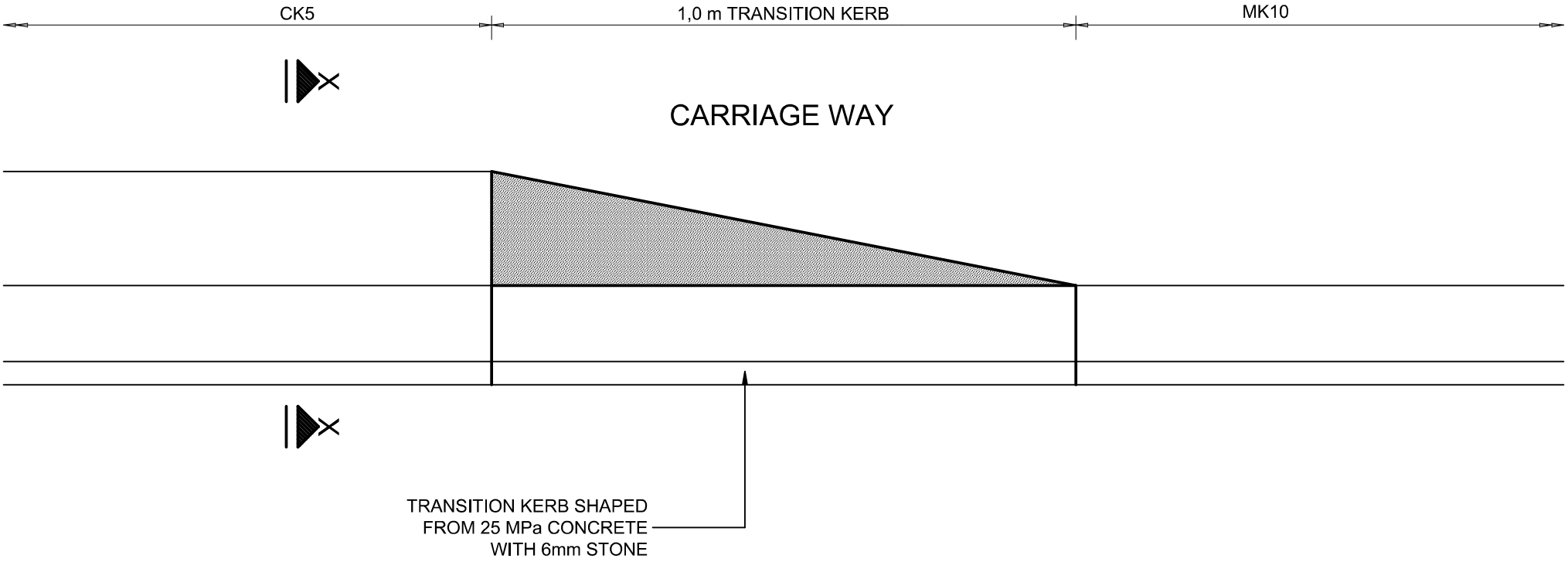

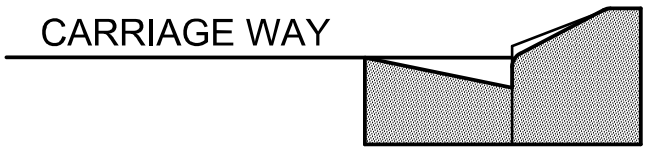

SECTION X - X

NOTE:

ALL EXPOSED SURFACES TO HAVE A STEEL FLOAT FINISH

STELLENBOSCH
STELLENBOSCH • PNIEL • FRANSCHHOEK
MUNISIPALITEIT • UMASIPALA • MUNICIPALITY

STANDARD DETAIL DRAWING

TRANSITION KERB : CK5 - MK10

Scale	Paper Size
1 : 10	A4

Drawing No.

SR16

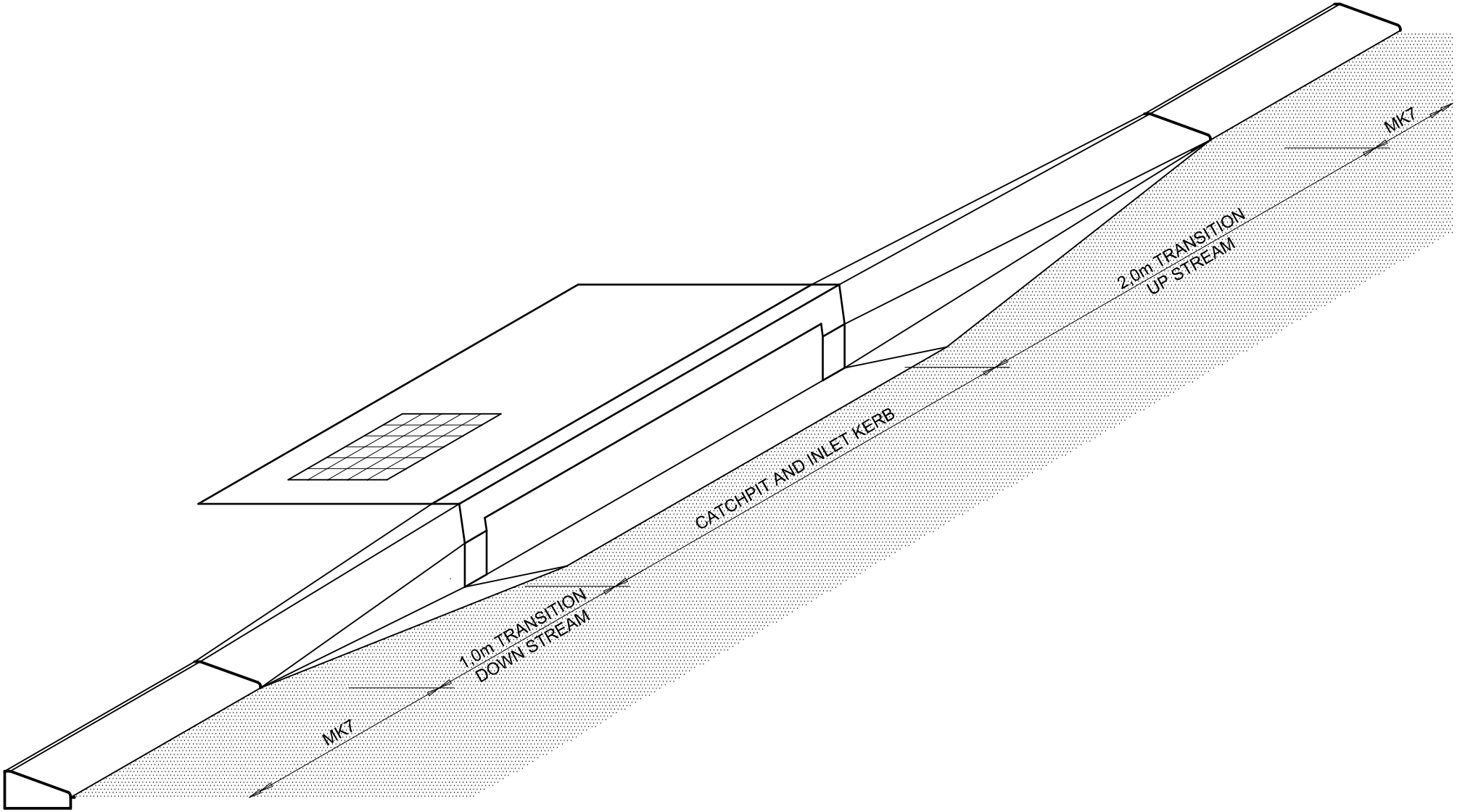

STELLENBOSCH
STELLENBOSCH • PNIEL • FRANSCHHOEK
MUNISIPALITEIT • UMASIPALA • MUNICIPALITY

STANDARD DETAIL DRAWING

Scale	Paper Size
1 : 10	A4

MK7 KERBS WITH TYPE B CATCHPIT
- ISOMETRIC VIEW -

Drawing No.
SR17

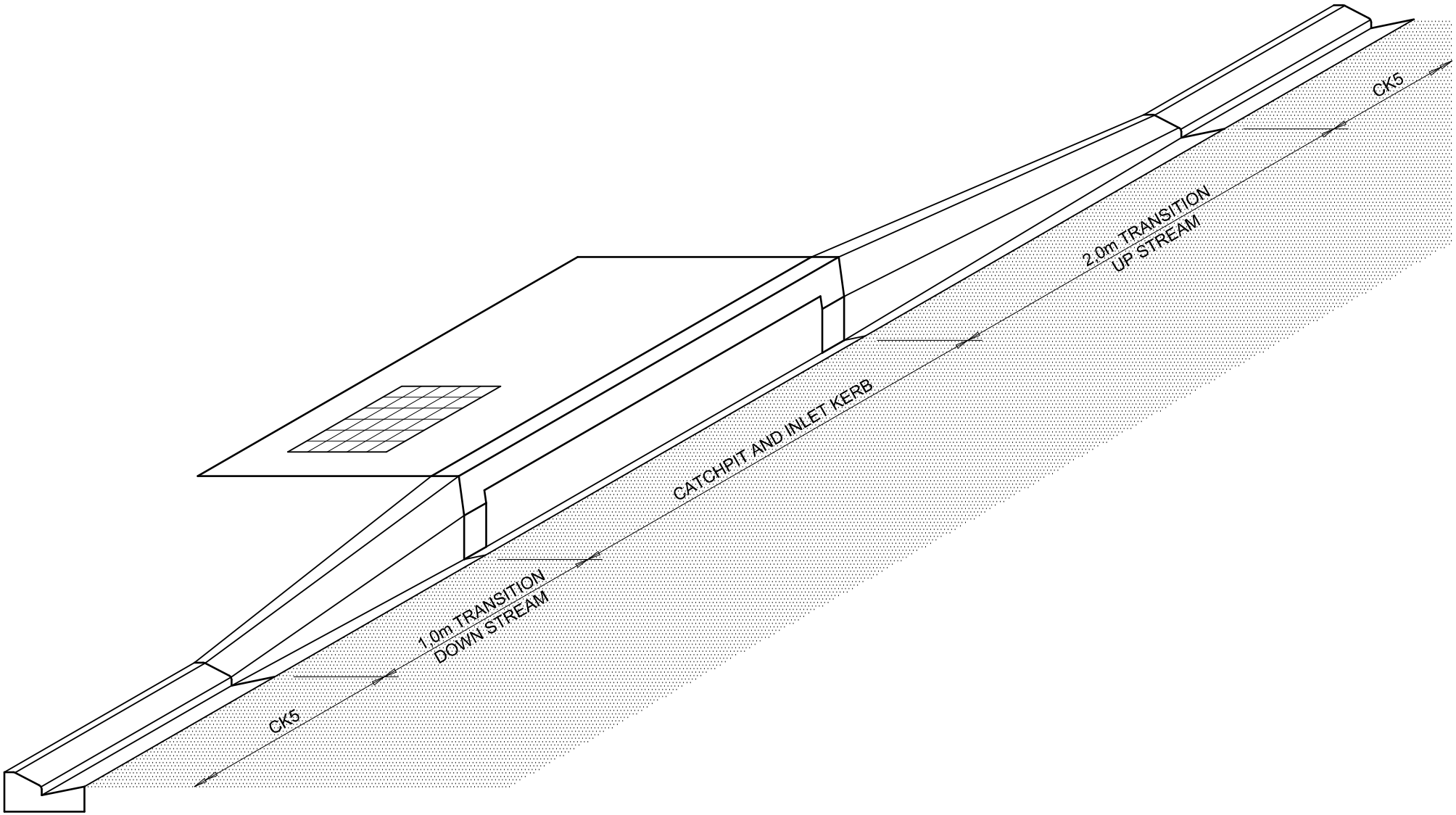

STELLENBOSCH
STELLENBOSCH • PNIEL • FRANSCHHOEK
MUNISIPALITEIT • UMASIPALA • MUNICIPALITY

STANDARD DETAIL DRAWING

Scale	Paper Size
1 : 10	A4

CK5 KERBS WITH TYPE B CATCHPIT
- ISOMETRIC VIEW -

Drawing No.
SR18

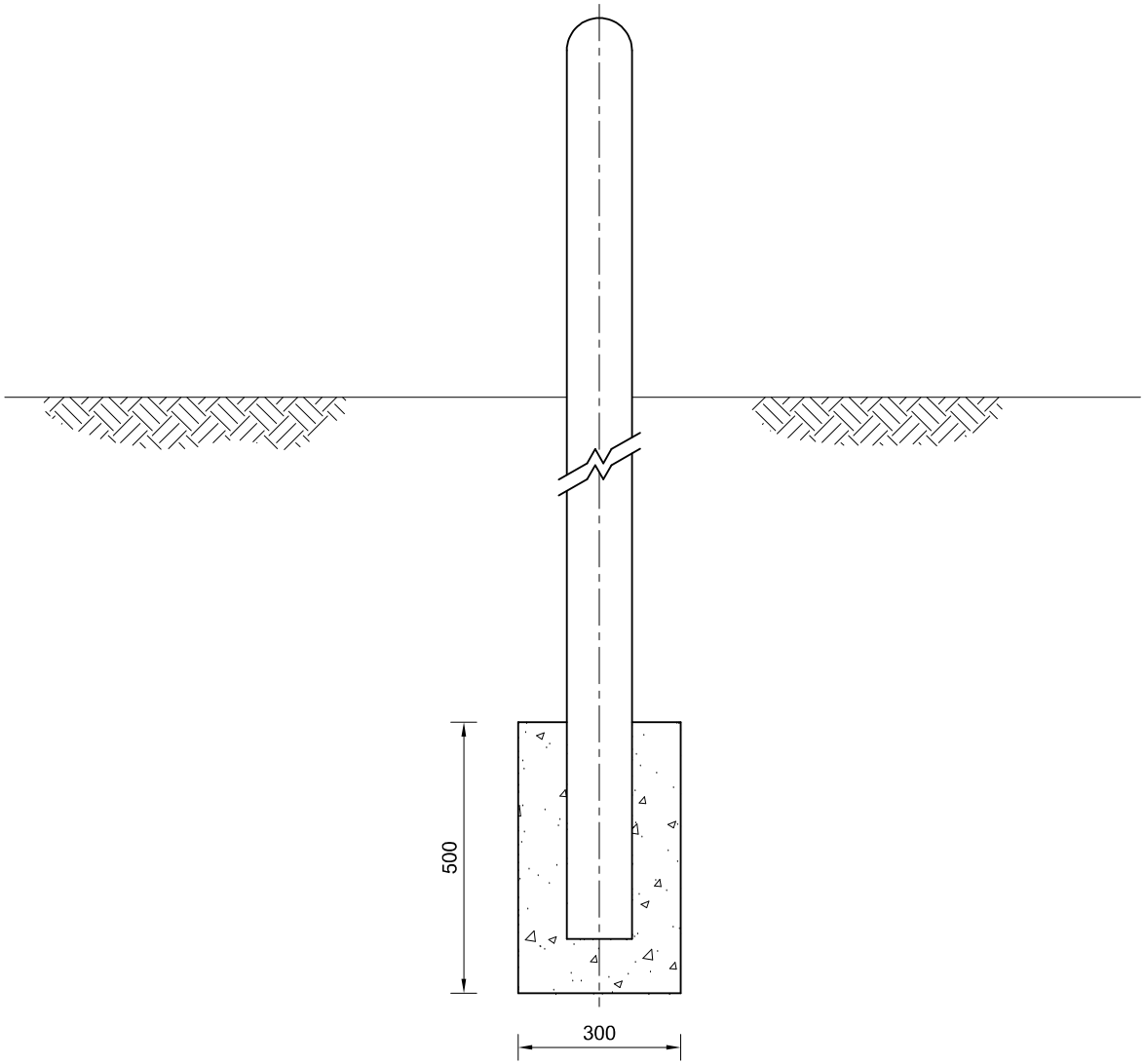

STELLENBOSCH
STELLENBOSCH • PNIEL • FRANSCHHOEK
MUNISIPALITEIT • UMASIPALA • MUNICIPALITY

STANDARD DETAIL DRAWING

TIMBER BOLLARD

Scale	Paper Size
N.T.S.	A4

Drawing No.

SR19

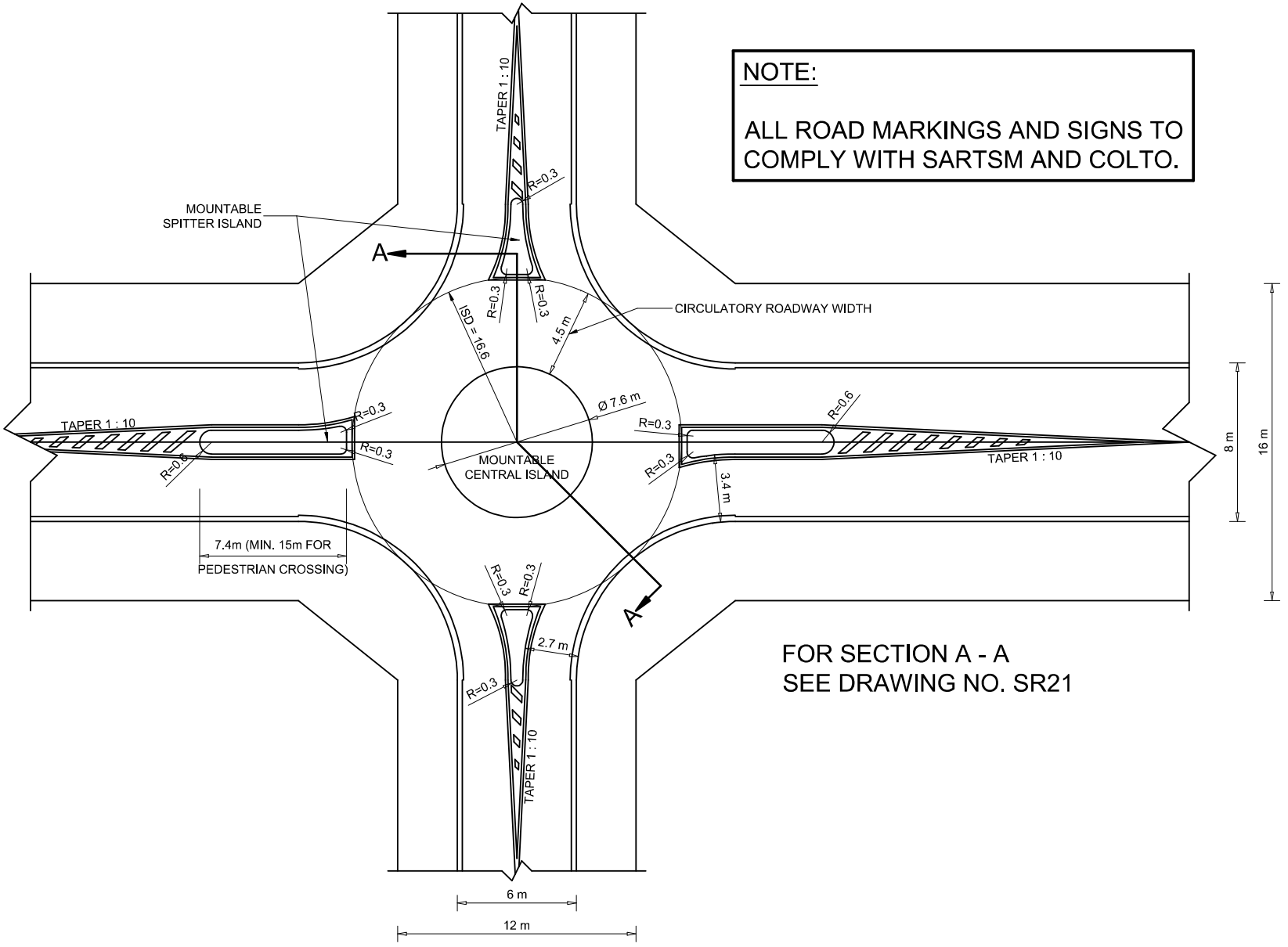

NOTE:

ALL ROAD MARKINGS AND SIGNS TO COMPLY WITH SARTSM AND COLTO.

FOR SECTION A - A
SEE DRAWING NO. SR21

STELLENBOSCH
STELLENBOSCH • PNIEL • FRANSCHHOEK
MUNISIPALITEIT • UMASIPALA • MUNICIPALITY

STANDARD DETAIL DRAWING

Scale	Paper Size
N.T.S.	A4

TYPICAL MINI ROUNDABOUT AT MIDDLE & LOWER ORDER LINK ROADS

Drawing No.
SR20

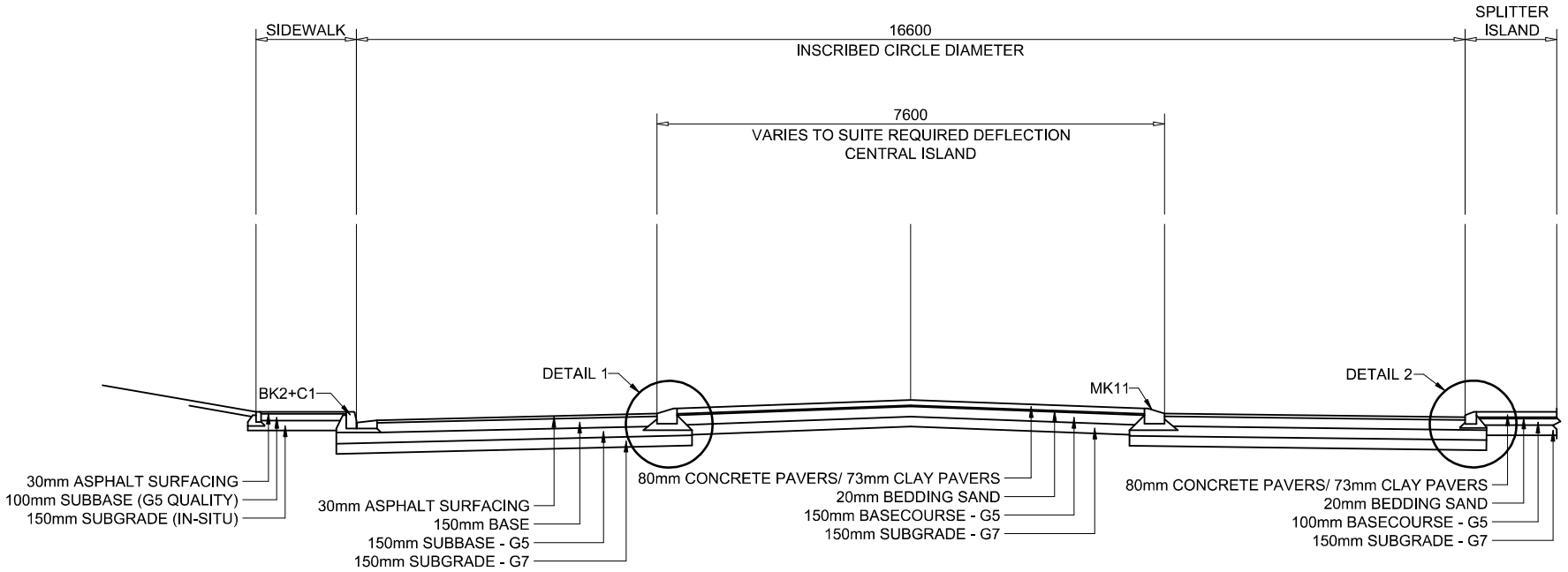

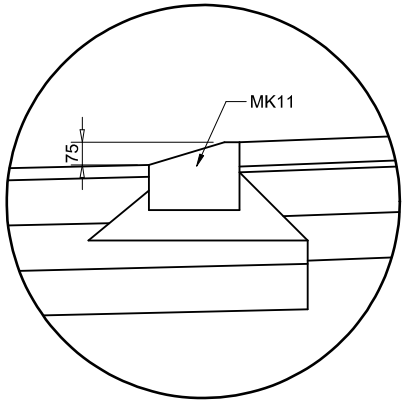

DETAIL 1
SCALE N.T.S.

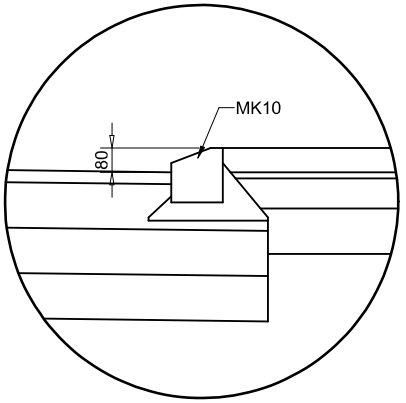

DETAIL 2
SCALE N.T.S.

NOTE:

1. RETROFITTED CIRCLE:
   - ROAD LAYERWORKS TO MATCH EXISTING PAVEMENT ON HIGHER OUTER ROAD OR MINIMUM OF THIS STANDARD, WHICHEVER IS THE STRONGEST

STELLENBOSCH
STELLENBOSCH • PNIEL • FRANSCHHOEK
MUNISIPALITEIT • UMASIPALA • MUNICIPALITY

STANDARD DETAIL DRAWING

SECTION (A - A) OF TYPICAL MINI ROUNDABOUT

Scale	Paper Size
1 : 100	A4

Drawing No.
SR21

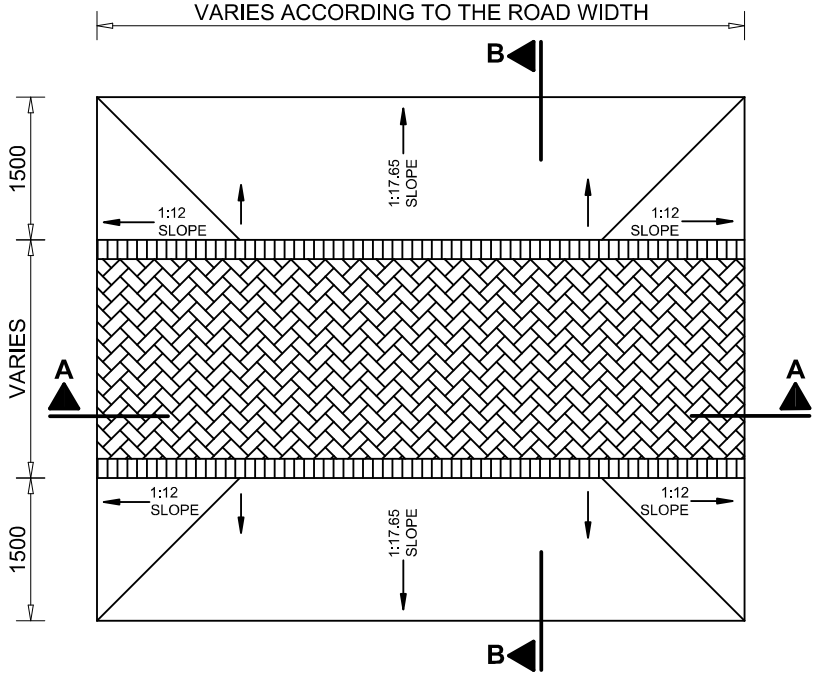

RAISED PEDESTRIAN CROSSING PLAN

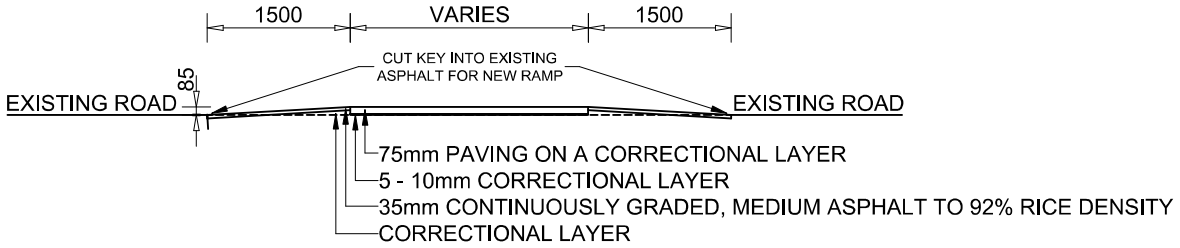

LONG SECTION B - B THROUGH CROSSING

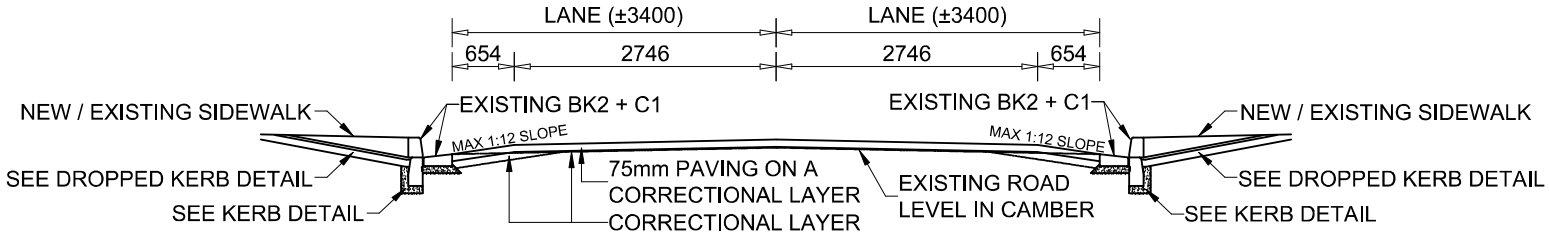

CROSS SECTION A - A THROUGH CROSSING

STELLENBOSCH
STELLENBOSCH • PNIEL • FRANSCHHOEK
MUNISIPALITEIT • UMASIPALA • MUNICIPALITY

STANDARD DETAIL DRAWING

TYPICAL RAISED PEDESTRIAN CROSSING

Scale	Paper Size
N.T.S.	A4

Drawing No.
SR22

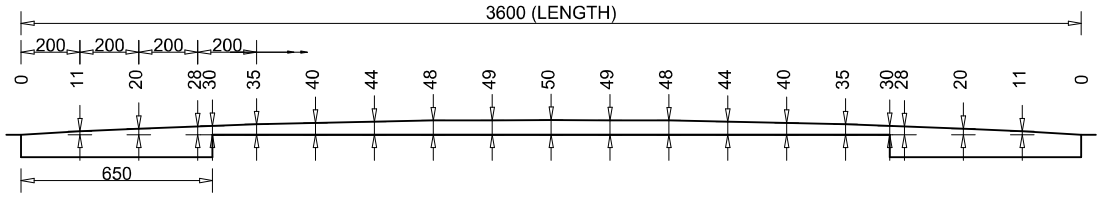

50mm SPEED HUMP PROFILE (50km/h)

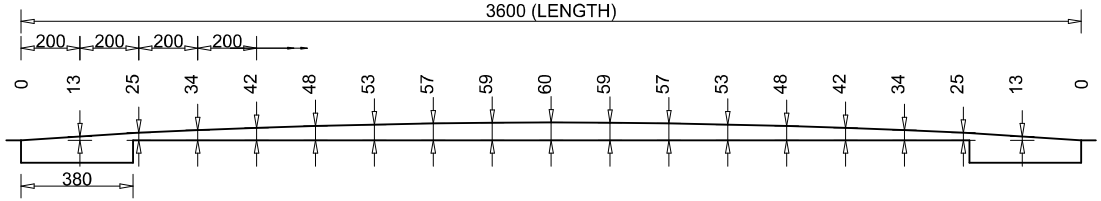

60mm SPEED HUMP PROFILE (40km/h)

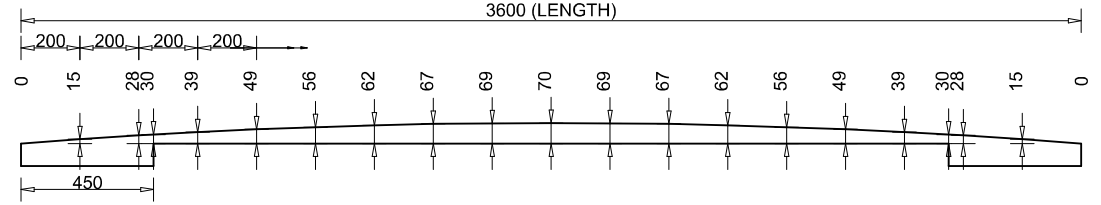

70mm SPEED HUMP PROFILE (30km/h)

NOTES:

1. SPEED HUMPS SHOULD NOT BE PLACED AT DRIVEWAY ENTRANCES OR STORMWATER GULLIES.
2. W332 AND IN11.1 SHOULD PREFFERABLY BE LOCATED WITHIN 30m AHEAD OF FIRST SPEED HUMP WHEN A SERIES OF SPEED HUMPS ARE USED.
3. SIGN MUST BE ERECTED BEFORE AND ROAD MARKINGS PROVIDED IMMEDIATELY AFTER CONSTRUCTION. ALLOW PREMIX TO COOL BEFORE PAINTING.
4. SPEED HUMP TO BE CONSTRUCTED FROM PREMIX 'TYPE A'. TACK COAT TO BE APPLIED ON ROAD SURFACE BEFORE CONSTRUCTION.

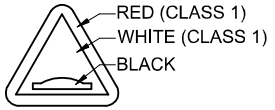

W332
(SPEED HUMPS)

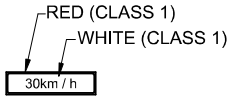

IN11.1
(SUPPLEMENTARY PLATE)

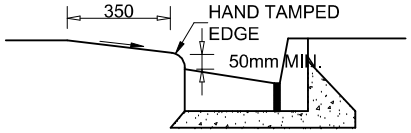

EXISTING KERB AND CHANNEL
CROSS - SECTION THROUGH A - A

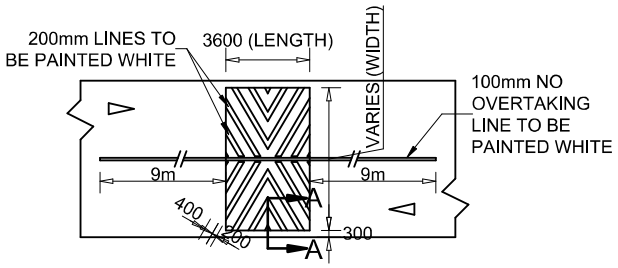

WM10 SPEED HUMP

STELLENBOSCH
STELLENBOSCH • PNIEL • FRANSCHHOEK
MUNISIPALITEIT • UMASIPALA • MUNICIPALITY

STANDARD DETAIL DRAWING

TYPICAL SPEED HUMP

Scale	Paper Size
N.T.S.	A4

Drawing No.
SR23

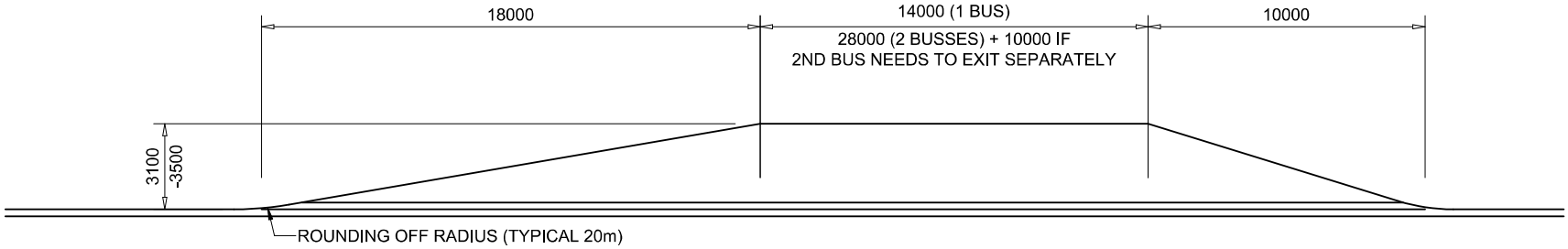

BUS EMBAYMENT

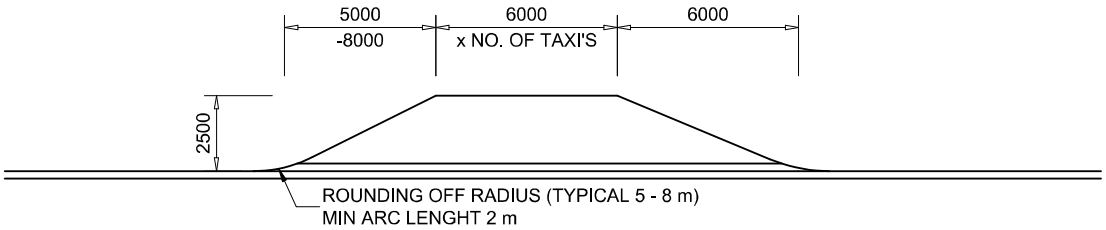

TAXI EMBAYMENT

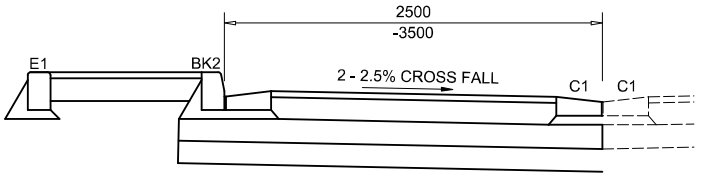

TYPICAL SECTION WITH CHANNEL

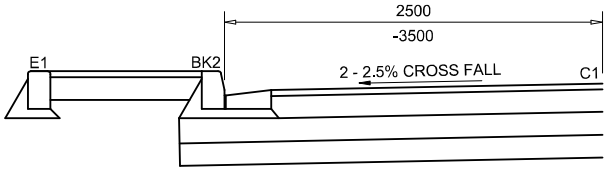

TYPICAL SECTION WITHOUT CHANNEL

NOTE:

WHERE A BUS/TAXI STOP IS REQUIRED AT AN INTERSECTION,
IT SHALL BE POSITIONED IMMEDIATELY AFTER THE INTERSECTION.
AT PEDESTRIAN CROSSING POINTS, BUS/TAXI EMBAYMENTS SHALL
BE POSITIONED IMMEDIATELY PAST THE PEDESTRIAN CROSSING POINT.

STELLENBOSCH
STELLENBOSCH • PNIEL • FRANSCHHOEK
MUNISIPALITEIT • UMASIPALA • MUNICIPALITY

STANDARD DETAIL DRAWING

TYPICAL TAXI AND BUS EMBAYMENT

Scale	Paper Size
1 : 250	A4

Drawing No.
SR24

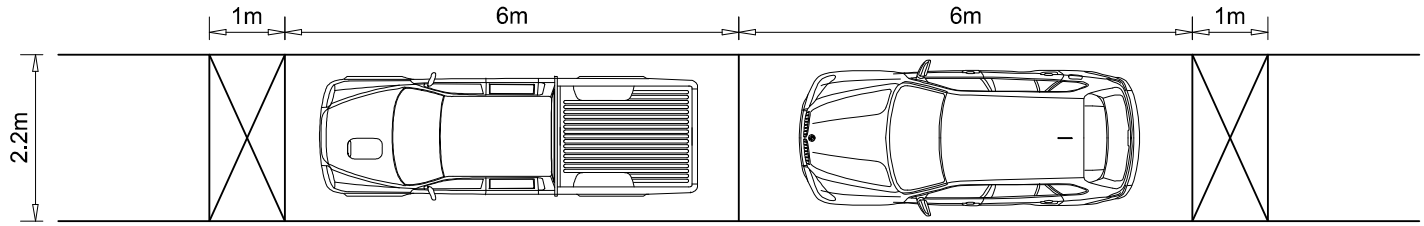

RECOMMENDED LAYOUT ALONG HIGHER ORDER LINKS

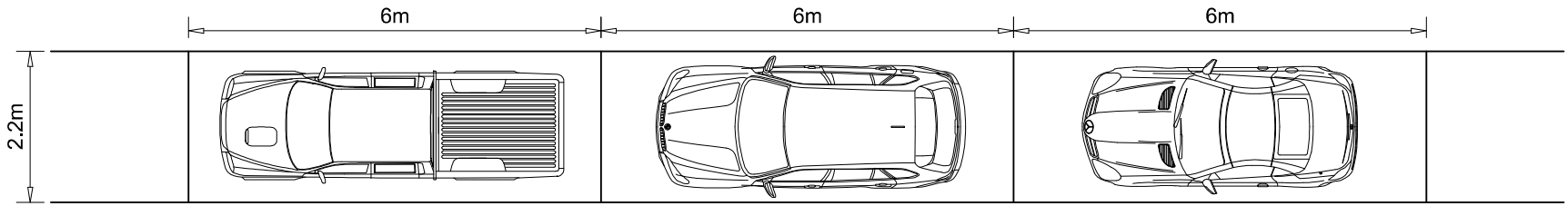

ABSOLUTE MINIMUM ALONG LOWER ORDER LINKS

STELLENBOSCH
STELLENBOSCH • PNIEL • FRANSCHHOEK
MUNISIPALITEIT • UMASIPALA • MUNICIPALITY

STANDARD DETAIL DRAWING

PARALLEL PARKING BAYS

Scale	Paper Size
1 : 100	A4

Drawing No.

SR25

NOTES:

1. (5) FIVE RACKS REQUIRED
2. ALL STEEL WORK TO BE HOT DIPPED GALVANISED, COLOUR TO LATER SPEC.
3. FOUNDATIONS TO ENGINEERS SPEC.

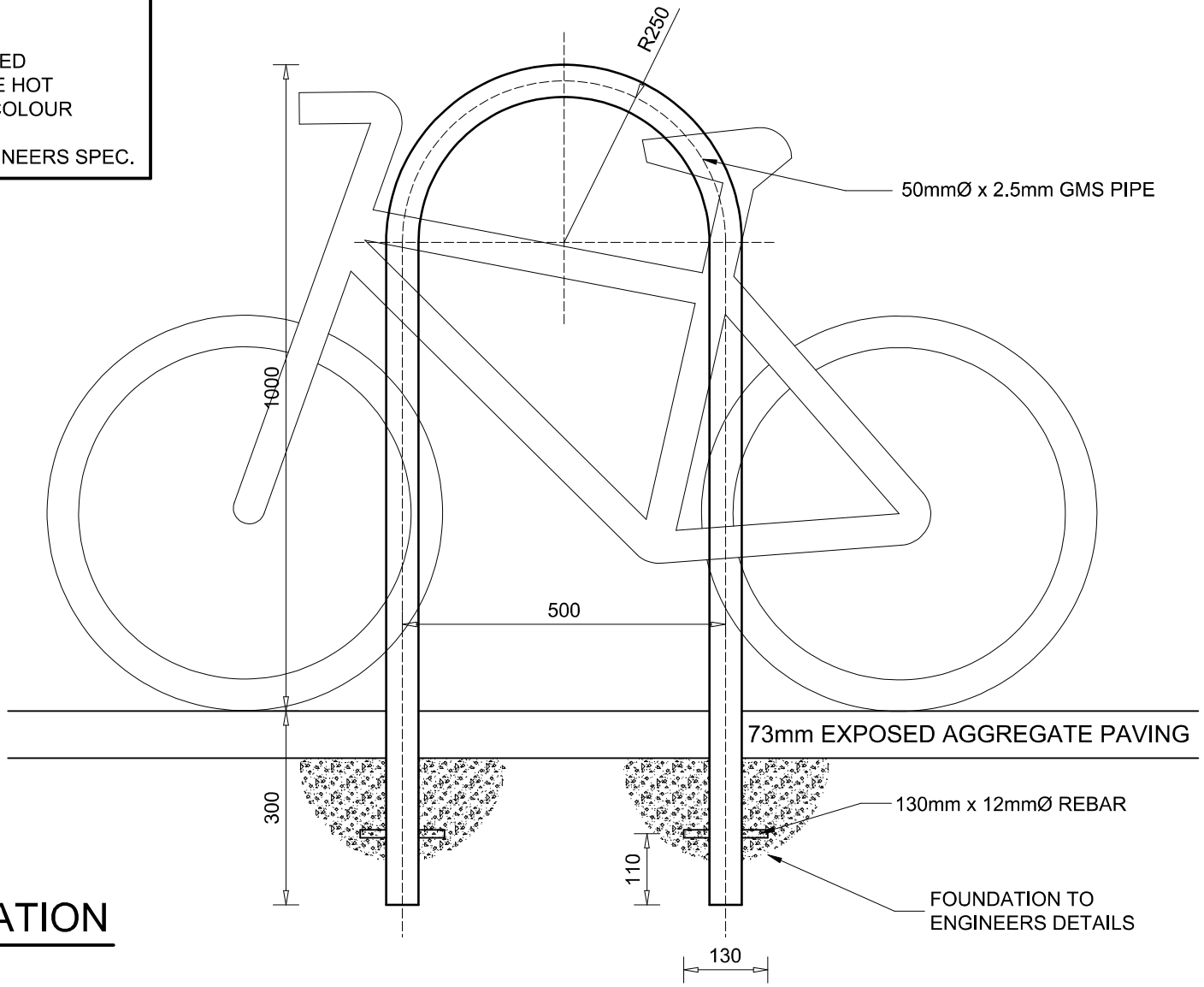

ELEVATION

STELLENBOSCH
STELLENBOSCH • PNIEL • FRANSCHHOEK
MUNISIPALITEIT • UMASIPALA • MUNICIPALITY

STANDARD DETAIL DRAWING

BICYCLE STAND TYPE 1 (1 OF 2)

Scale	Paper Size
1 : 10	A4

Drawing No.
SR26

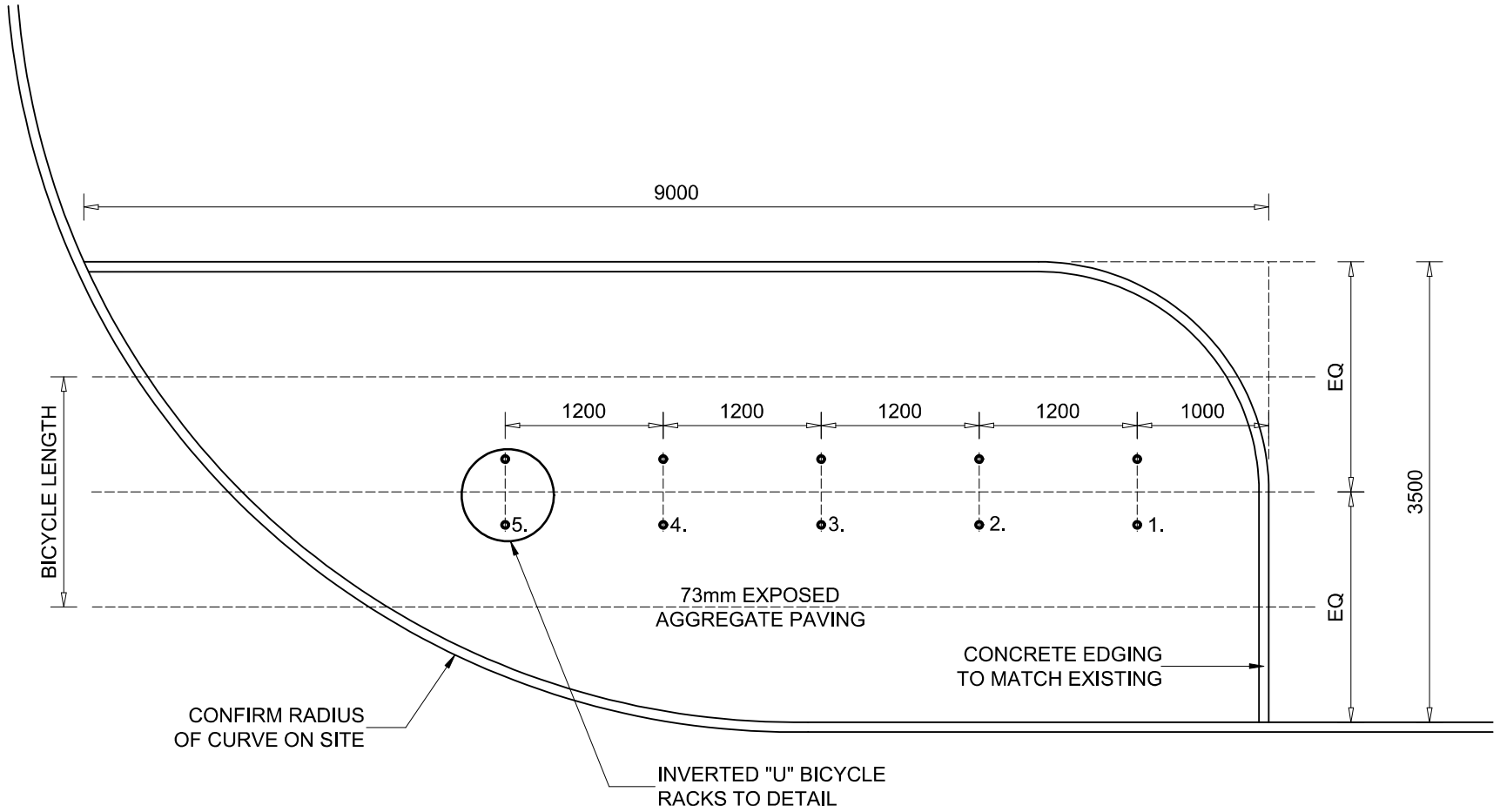

LAYOUT PLAN

STELLENBOSCH
STELLENBOSCH • PNIEL • FRANSCHHOEK
MUNISIPALITEIT • UMASIPALA • MUNICIPALITY

STANDARD DETAIL DRAWING

BICYCLE STAND TYPE 1 (2 OF 2)

Scale	Paper Size
1 : 50	A4

Drawing No.
SR27

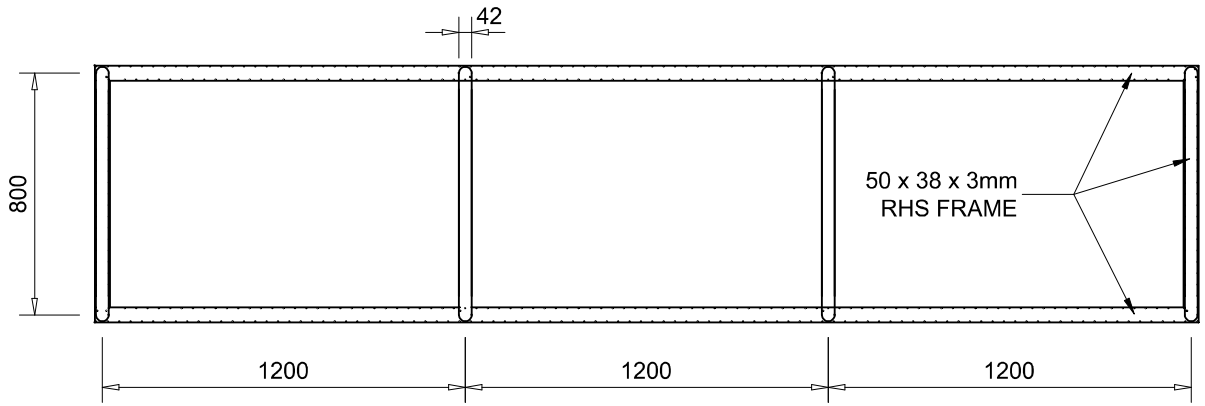

PLAN VIEW

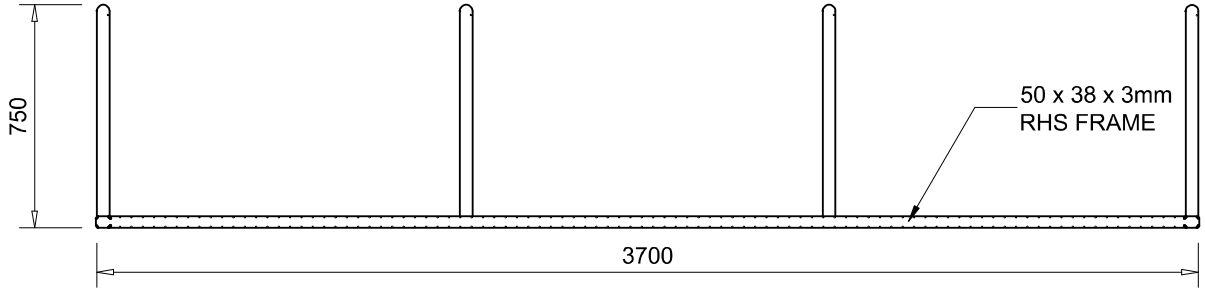

ELEVATION

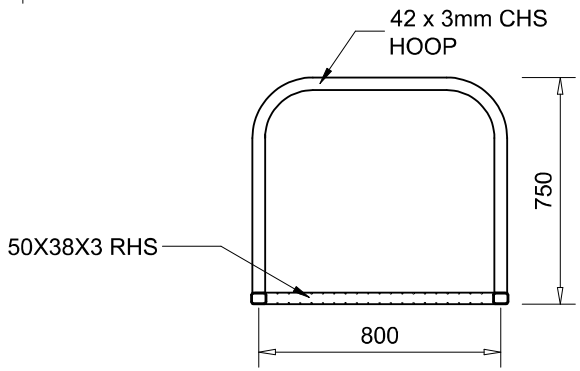

SECTION

NOTE:

ALL STEEL TO BE GALVANISED.

STELLENBOSCH
STELLENBOSCH • PNIEL • FRANSCHHOEK
MUNISIPALITEIT • UMASIPALA • MUNICIPALITY

STANDARD DETAIL DRAWING

BICYCLE STAND TYPE 2

Scale	Paper Size
1 : 25	A4

Drawing No.

SR28

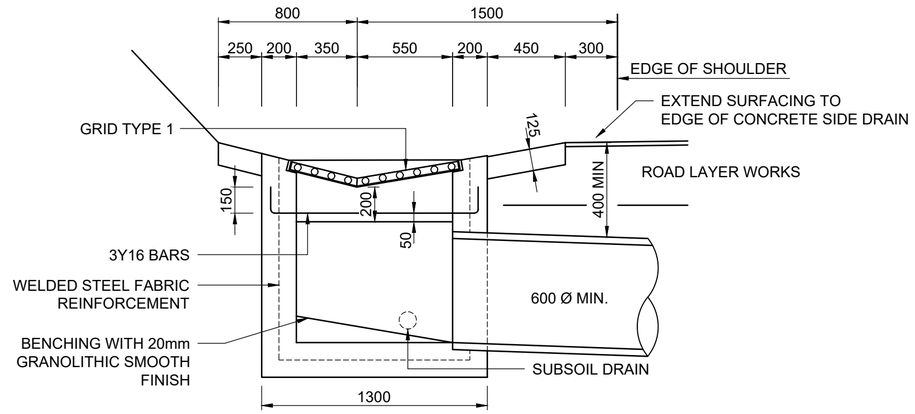

SECTION A-A

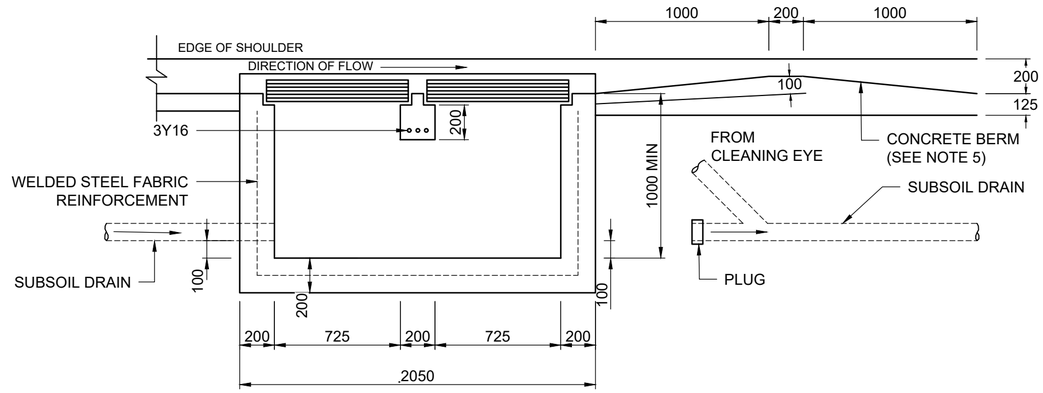

SECTION B-B

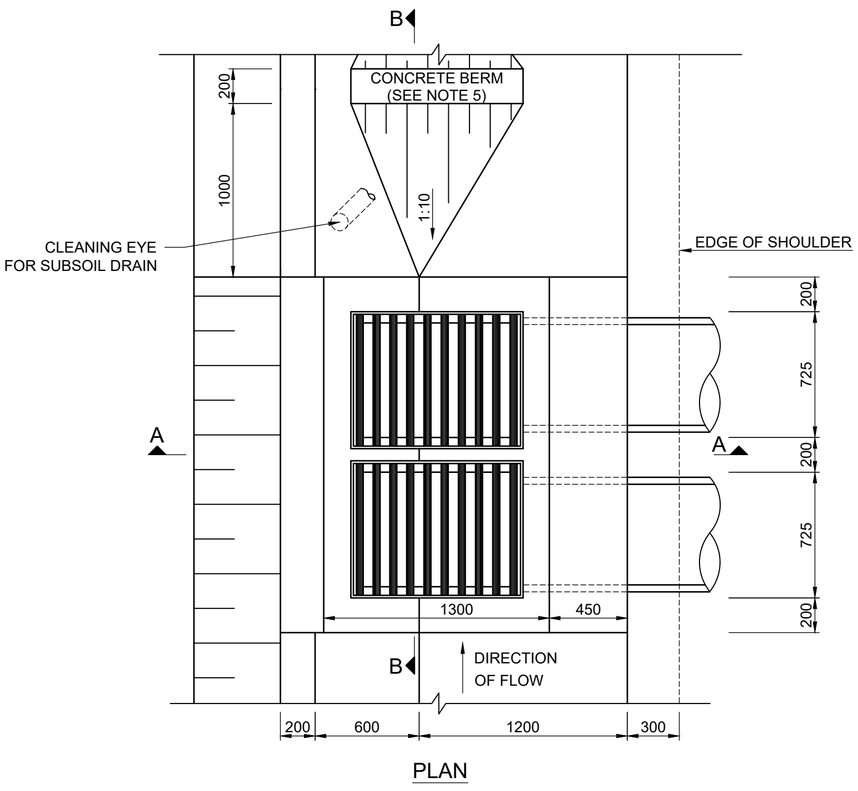

PLAN

NOTES :

1. CONCRETE CLASS 30/20.
2. FINISH - VISIBLE F2
   HIDDEN F1
3. REINFORCEMENT - WELDED STEEL FABRIC REF. 617. PAYMENT ITEM 23.05 SHALL INCLUDE COMPENSATION FOR REINFORCEMENT.
4. DEPTH OF INLET MUST BE ADJUSTED TO SUIT SUBSOIL DRAIN DEPTH.
5. CONCRETE BERM ONLY REQUIRED FOR SIDE DRAIN SLOPE > 3%.
6. FOR DETAIL OF CLEANING EYE OF SUBSOIL DRAIN REFER TO DWG. No. WCS/21/3/C3.
7. THIS DRAWING IS TO BE READ IN CONJUNCTION WITH DWG. No. WCS/23/3/C1

No.	DATE	ADDITIONS AND AMENDMENTS
0	OCT - 2023	ORIGINAL VERSION

STANDARD PLANS

WESTERN CAPE GOVERNMENT
DEPARTMENT OF INFRASTRUCTURE
TRANSPORT INFRASTRUCTURE BRANCH

SIDE DRAIN

TYPICAL GRID INLET IN CONCRETE SIDE DRAIN

SCALE : N.T.S.

A2 ORIGINAL

INDEX NO.
WCS/23/3/C3

PLAN NO.
SHEET 3 OF 15

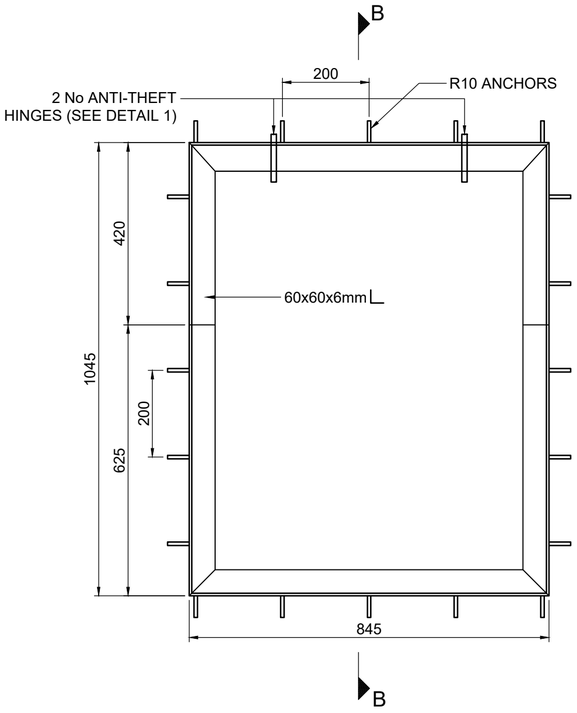

GRID FRAME

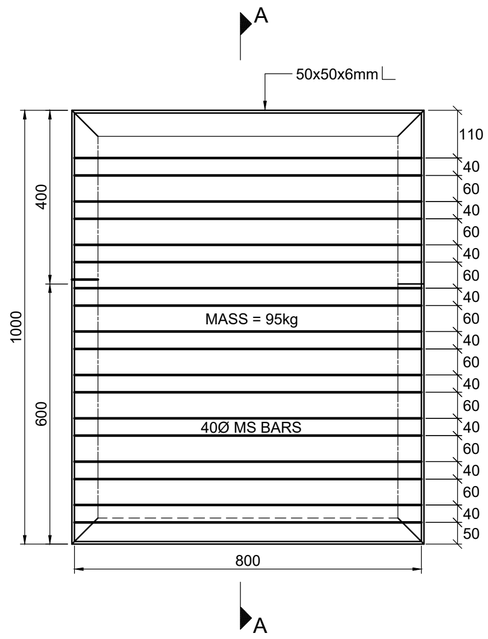

GRID PLAN

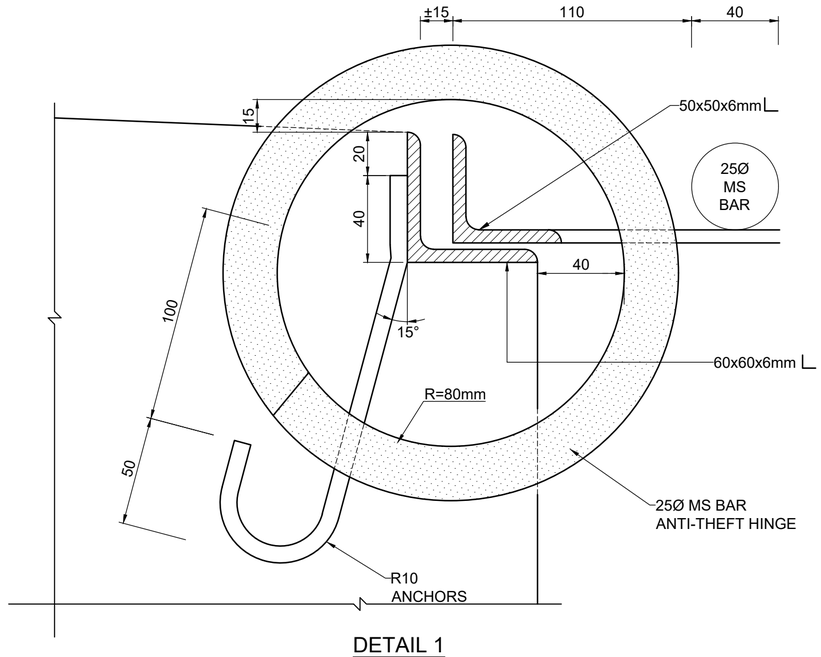

DETAIL 1

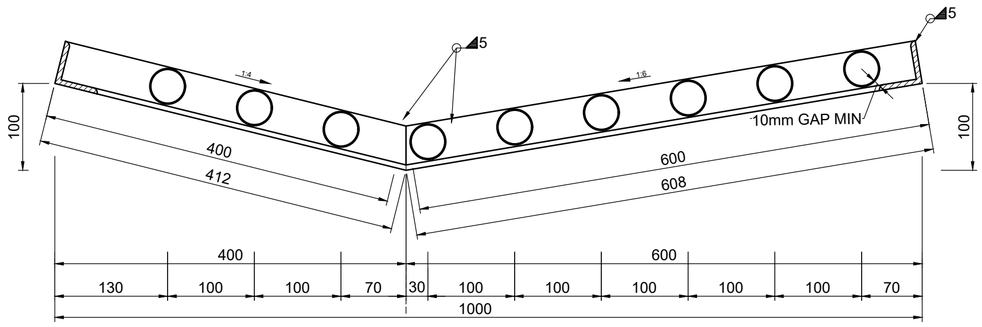

SECTION A-A

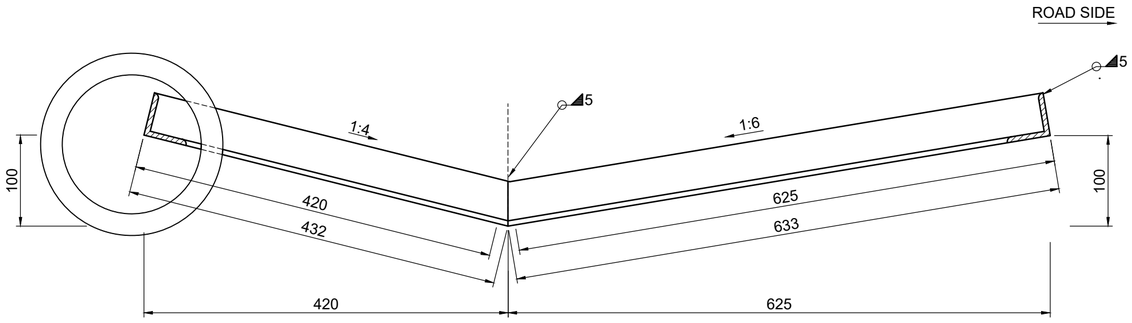

SECTION B-B

NOTES :

1. ALL STEEL AND WELDING TO COMPLY WITH SECTION 6700 OF COLTO STANDARD SPECIFICATIONS FOR ROAD AND BRIDGE WORKS.
2. GRID AND FRAME SHALL BE HOT-DIP GALVANIZED WITH AN 85 MICRON COATING IN ACCORDANCE WITH SANS 121.
3. PAYMENT INCLUDED IN ITEM 23.05.

No.	DATE	ADDITIONS AND AMENDMENTS
0	OCT - 2023	ORIGINAL VERSION

STANDARD PLANS

WESTERN CAPE GOVERNMENT
DEPARTMENT OF INFRASTRUCTURE
TRANSPORT INFRASTRUCTURE BRANCH

SIDE DRAIN

GRID DETAIL TYPE 1

SCALE : N.T.S.

A2 ORIGINAL

INDEX NO.
WCS/23/3/C6

PLAN NO.
SHEET 6 OF 15

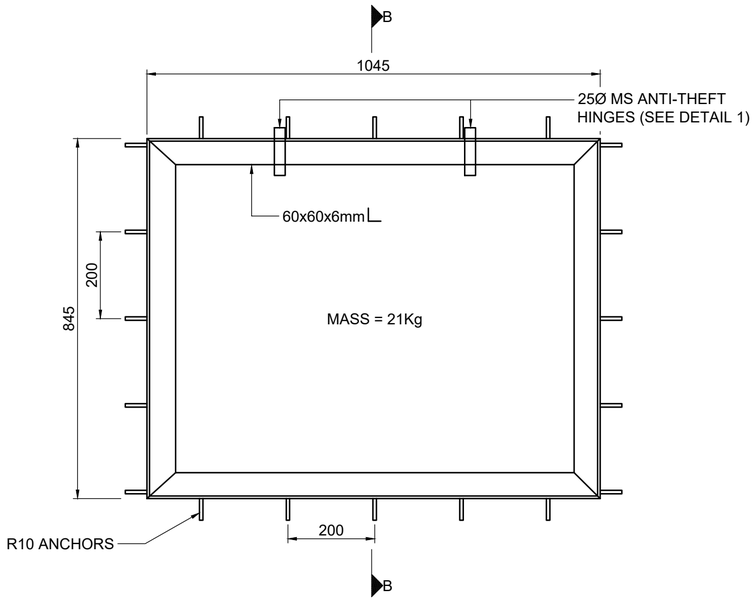

GRID FRAME

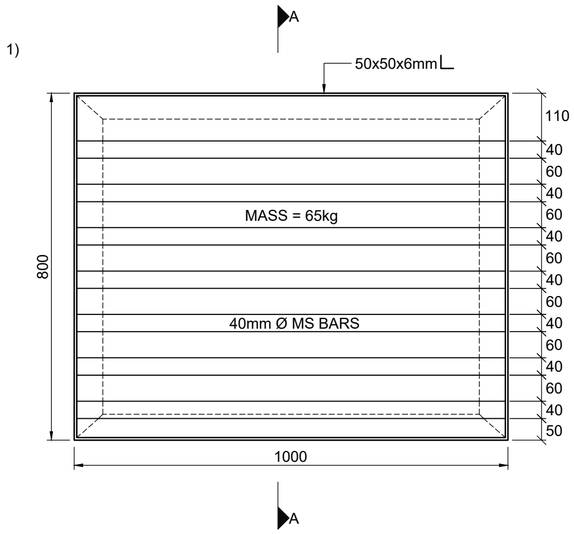

GRID PLAN

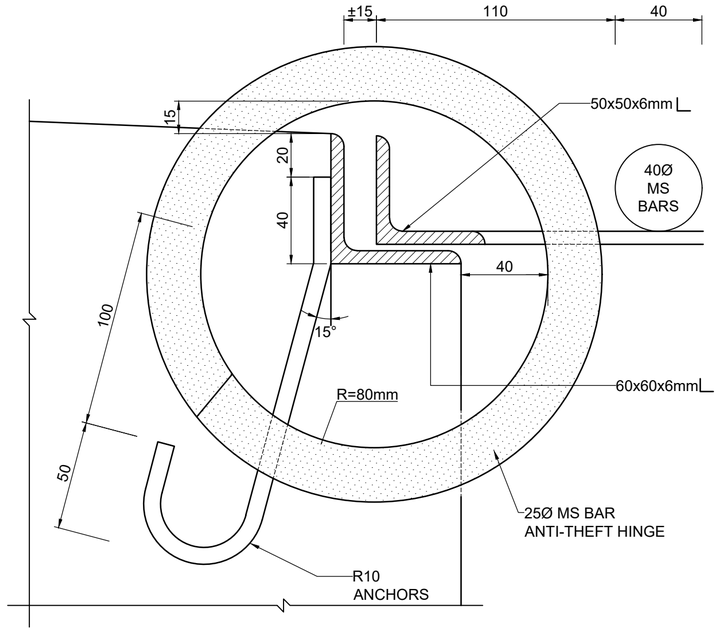

DETAIL 1

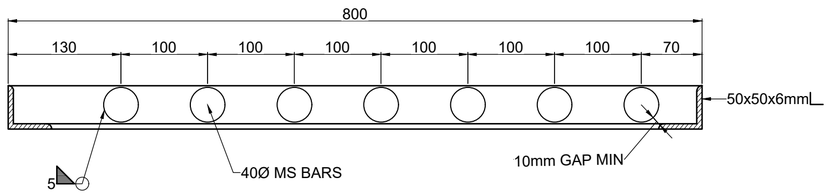

SECTION A-A
SCALE 1:5

NOTES :

1. ALL STEEL AND WELDING TO COMPLY WITH SECTION 6700 OF COLTO STANDARD SPECIFICATIONS FOR ROAD AND BRIDGE WORKS.
2. GRID AND FRAME SHALL BE HOT-DIP GALVANIZED WITH AN 85 MICRON COATING IN ACCORDANCE WITH SANS 121.
3. PAYMENT INCLUDED IN ITEM 23.05.

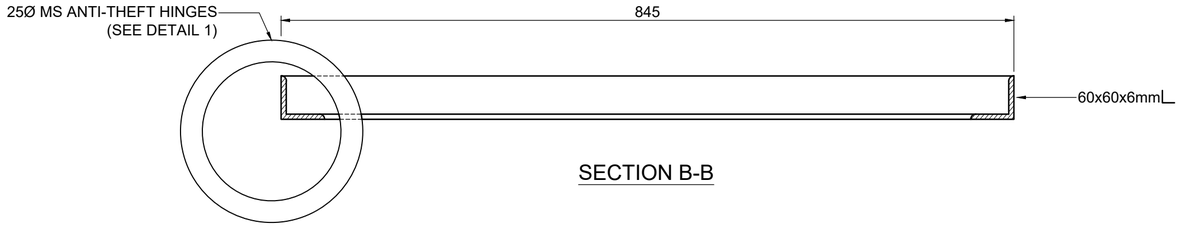

SECTION B-B

No.	DATE	ADDITIONS AND AMENDMENTS
0	OCT - 2023	ORIGINAL VERSION

STANDARD PLANS

WESTERN CAPE GOVERNMENT
DEPARTMENT OF INFRASTRUCTURE
TRANSPORT INFRASTRUCTURE BRANCH

SIDE DRAIN

GRID DETAIL TYPE 2

SCALE : N.T.S.

A2 ORIGINAL

INDEX NO.
WCS/23/3/C7

PLAN NO.
SHEET 7 OF 15